Form No. 3401-814 Rev A

TORO®

Count on it.

Operator's Manual

4045 Directional Drill

Model No. 23823—Serial No. 315000001 and Up
Model No. 23823A—Serial No. 315000001 and Up
Model No. 23823C—Serial No. 315000001 and Up
Model No. 23823TE—Serial No. 315000001 and Up
Model No. 23823W—Serial No. 315000001 and Up
Model No. 23825—Serial No. 315000001 and Up
Model No. 23825A—Serial No. 315000001 and Up
Model No. 23825C—Serial No. 315000001 and Up
Model No. 23825TE—Serial No. 315000001 and Up
Model No. 23825W—Serial No. 315000001 and Up

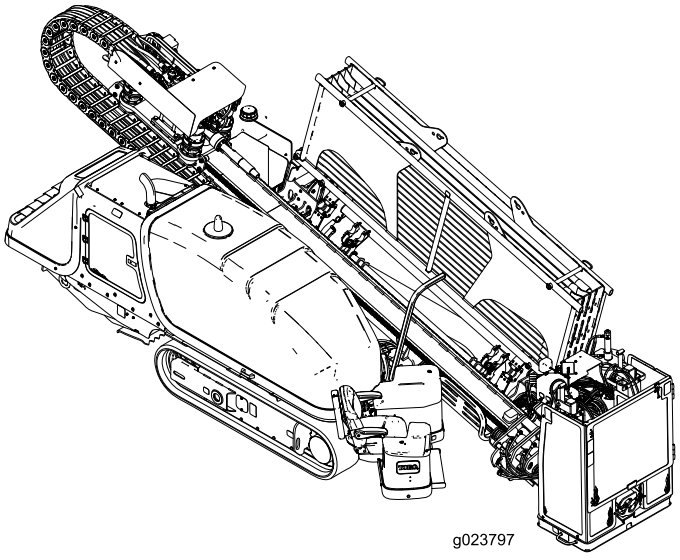
g023797

Register at www.Toro.com.
Original Instructions (EN)

CE

3401-814 A

This product complies with all relevant European directives; for details, please see the separate product specific Declaration of Conformity (DOC) sheet.

⚠ WARNING

CALIFORNIA
Proposition 65 Warning

This product contains a chemical or chemicals known to the State of California to cause cancer, birth defects, or reproductive harm.

Diesel engine exhaust and some of its constituents are known to the State of California to cause cancer, birth defects, and other reproductive harm.

Because in some areas there are local, state, or federal regulations requiring that a spark arrester be used on the engine of this machine, a spark arrester is available as an option. If you require a spark arrester, contact your Authorized Toro Service Dealer.

Genuine Toro spark arresters are approved by the USDA Forestry Service.

Important: It is a violation of California Public Resource Code Section 4442 to use or operate the engine on any forest-covered, brush-covered, or grass-covered land without a spark arrester muffler maintained in working order, or the engine constricted, equipped, and maintained for the prevention of fire. Other states or federal areas may have similar laws.

The enclosed *Engine Owner's Manual* is supplied for information regarding the US Environmental Protection Agency (EPA) and the California Emission Control Regulation of emission systems, maintenance, and warranty. Replacements may be ordered through the engine manufacturer.

For radio frequency compliance information, refer to your *Compliance Statement Addendum* that pertains to your country.

Labeled power ratings are supplied by the engine manufacturer in accordance with SAE testing and gross/net power rating standards (J1940, J1995, J1349).

Introduction

This machine is a directional drill intended for underground drilling and pullback operation for utility lines including electrical, gas, communication, water, etc. It is designed to operate a wide variety of attachments each of which perform a specialized function.

Read this information carefully to learn how to operate and maintain your product properly and to avoid injury and product damage. You are responsible for operating the product properly and safely.

You may contact Toro directly at www.Toro.com for product safety and operation training materials, accessory information, help finding a dealer, or to register your product.

Whenever you need service, genuine Toro parts, or additional information, contact an Authorized Service Dealer or Toro Customer Service and have the model and serial numbers of your product ready. Figure 1 identifies the location of the model and serial numbers on the product. Write the numbers in the space provided.

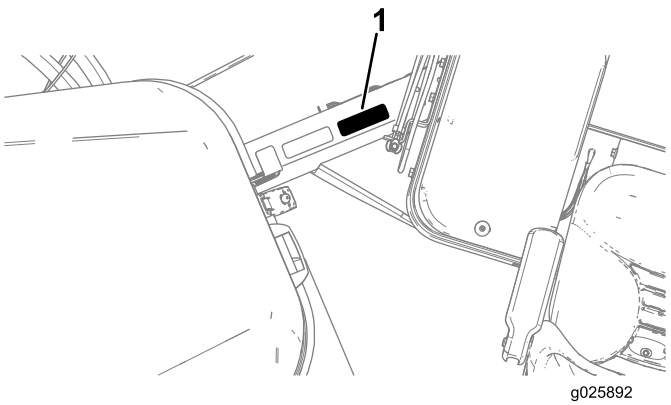

Figure 1

1. Model and serial number location

Model No. _____

Serial No. _____

This manual identifies potential hazards and has safety messages identified by the safety alert symbol (Figure 2), which signals a hazard that may cause serious injury or death if you do not follow the recommended precautions.



Figure 2

1. Safety alert symbol

This manual uses 2 words to highlight information. **Important** calls attention to special mechanical information and **Note** emphasizes general information worthy of special attention.

© 2015—The Toro® Company
8111 Lyndale Avenue South
Bloomington, MN 55420

Contact us at www.Toro.com.
Printed in the USA.
All Rights Reserved

Contents

Safety 4
Training 4
Preparation 4
General Operation 4
Driving Safety 5
Drilling Safety 6
Maintenance and Storage 7
Noise and Vibration Levels 8
Safety and Instructional Decals 9
Product Overview 21
Controls 24
Operator Platform 24
Control Panel 25
Left Joystick—Mode I 26
Left Joystick—Mode II 27
Right Joystick—Mode I 28
Right Joystick—Mode II 29
Rear Control Panel 30
Drill Frame and Stabilizer Controls 31
Drive Pendant 31
Drill Pendant 32
Stake-Down Levers 34
Specifications 34
Operation 35
Understanding Horizontal Directional Drilling 35
Gathering Site Information 36
Planning the Bore Path 38
Preparing the Job Site and the Machine 43
Drilling the Bore 51
Backreaming and Pullback 56
Finishing the Job 58
Using the TJC Applicator 58
Moving a Disabled Machine 60
Replacing the Pipe Holder 60
Positioning the Cab (Model with Cab only) 61
Opening the Door (Model with Cab only) 61
Operating the Air Conditioning and Heating (Model with Cab only) 62
Operating the Windshield Wipers (Model with Cab only) 62
Maintenance 63
Recommended Maintenance Schedule(s) 63
Premaintenance Procedures 65
Opening the Front Hood 65
Opening the Rear-Access Door 65
Using the Cylinder Lock 66
Lubrication 67
Greasing the Machine 67
Engine Maintenance 69
Cleaning the Crankcase-Vent Tube 69
Servicing the Air-Cleaning System 69
Servicing the Engine Oil and Filter 71
Adjusting the Valve Clearance 73
Fuel System Maintenance 74
Draining Water from the Fuel Filter 74
Draining Water from the Fuel Tank 74
Priming the Fuel System 75
Replacing the Fuel Filters 75
Checking the Fuel Lines and Connections 76
Draining and Cleaning the Fuel Tank 76
Electrical System Maintenance 77
Servicing the Battery 77
Charging the Battery 78
Jump-Starting the Machine 78
Drive System Maintenance 79
Checking the Oil Level for the Stakedown Planetary Drive 79
Checking the Oil Level for the Tracks Planetary Drive 80
Changing the Oil for the Tracks Planetary Drive 80
Checking the Oil Level for the Rotary Motor Planetary Drive 81
Checking the Oil for the Thrust Motor Planetary Drive 81
Checking the Oil for the Gearbox Drive 82
Changing the Oil for the Gearbox Drive 82
Servicing the Tracks 83
Cooling System Maintenance 84
Checking the Coolant Level in the Radiator 85
Checking the Condition of Cooling-System Components 85
Checking the Concentration of the Coolant 85
Cleaning the Cooling System 85
Belt Maintenance 88
Servicing the Engine-Drive Belt 88
Hydraulic System Maintenance 90
Servicing the Hydraulic Fluid 90
Drilling-Fluid Pump Maintenance 93
Servicing the Drilling-Fluid-Pump Oil 93
Preparing the Drilling-Fluid System for Cold Weather 95
Cab Maintenance 97
Changing the Cab Air Filter 97
Filling the Windshield-Washer Fluid Tank 97
Cleaning 98
Cleaning with the Spray-Hose Attachment 98
Cleaning Plastic and Resin Parts 98
Storage 99
Troubleshooting 100
Index 103

Safety

Improper use or maintenance by the operator or owner can result in injury. To reduce the potential for injury, comply with these safety instructions, and pay attention to the safety alert symbol , which means **Caution**, **Warning**, or **Danger**—"personal safety instruction." **Failure to comply with the instructions may result in personal injury or death.**

Important: This machine was manufactured according to the appropriate regulatory standards in effect at the time of manufacture. Modifying this machine in any way may cause it to be out of compliance with those standards and with the instructions in this *Operator's Manual*. Modifications to this machine should only be made by either the manufacturer or an Authorized Toro Dealer.

This product is capable of amputating hands and feet. Follow all safety instructions to avoid serious injury or death.

The owner/user can prevent and is responsible for accidents or injuries occurring to people, or damage to property.

Important: Before operating in an area with high-voltage lines or cables, contact a "One-Call System Directory" service. In the USA, call 811 or your local utility company. If you do not know your local utility company's phone number, call the national number (USA and Canada only) at 1-888-258-0808. Also, contact any utility companies that are not participants of the "One-Call System Directory" service. Please refer to Drilling Near Utility Lines (page 6) for more information.

Training

- Read the *Operator's Manual* and other training material.

  Note: If the operator(s) or mechanic(s) cannot read English, it is the owner's responsibility to explain this material to them.
- Become familiar with the safe operation of the equipment, operator controls, and safety signs.
- All operators and mechanics should be trained. The owner is responsible for training the users.
- Do not let children or untrained people operate or service the equipment.

Preparation

- Evaluate the terrain to determine what accessories and attachments are needed to properly and safely perform the job. Only use accessories and attachments approved by the manufacturer.
- Wear appropriate clothing; including a hard hat, safety glasses, long pants, electrically insulated safety boots (rubber boots), electrically insulated gloves, and hearing protection.

  Important: Long hair, loose clothing or jewelry may get tangled in moving parts.
- Inspect the area where the equipment is to be used and ensure that all objects are removed from the machine before use.
- Use extra care when handling fuels. They are flammable and vapors are explosive.
  - Use only an approved container.
  - Do not remove the fuel cap or add fuel with the engine running. Allow the engine to cool before refueling. Do not smoke near the machine when the engine is running.
  - Do not refuel or drain the machine indoors.
- Check that the operator's presence controls, safety switches, and shields are attached and functioning properly. Do not operate the machine unless they are functioning properly.

General Operation

- Do not run the engine in an enclosed area.
- Do not operate the machine while children, pets, or untrained people nearby.
- Do not operate the machine with damaged guards, shields, or without safety protective devices in place.
- Ensure that all interlocks are attached, adjusted properly, and functioning properly.
- Ensure that you wear electrically insulated safety boots and gloves.
- Do not change the engine governor setting or overspeed the engine.
- Keep away from moving machine parts and pipes.
- Do not operate the machine when under the influence of alcohol or drugs.
- Do not leave the machine running unattended. Stop the engine and remove the key before leaving.
- Locate the pinch-point areas marked on the machine and attachments and keep hands and feet away from these areas.
- Lightning can cause severe injury or death. If lightning is seen or thunder is heard in the area, do not operate the machine; seek shelter.

Driving Safety

You drive the machine to and from the work site with the use of a tethered remote. When driving the machine, observe the following safety precautions:

- Operate the drive pendant alongside the machine outside of the danger zone (Figure 3).
- Keep all bystanders away while moving the machine.
- Do not carry passengers on the machine.
- Watch for the turning-radius sweep of the drill frame, as the center of the turning radius is the end of the track.
- Moving the machine with the tethered remote can be erratic; move slowly when using the remote for movement.
- Use care when loading or unloading the machine onto a trailer.
- Watch for traffic when crossing roadways.
- Check for overhead clearances (i.e. branches, doorways, electrical wires) before driving under any objects and do not contact them.
- Use care when driving the machine on soft or unstable ground.

  Note: Soft or uneven ground can reduce stability.
- When driving on a slope, the operator should be up-slope from the machine.

  Note: The machine can be unstable on slopes.
- Drive in accordance with the weather conditions.

  Note: Drive with caution during adverse weather conditions.

The following illustration displays the safe distance that must be kept by all individuals while moving the machine.

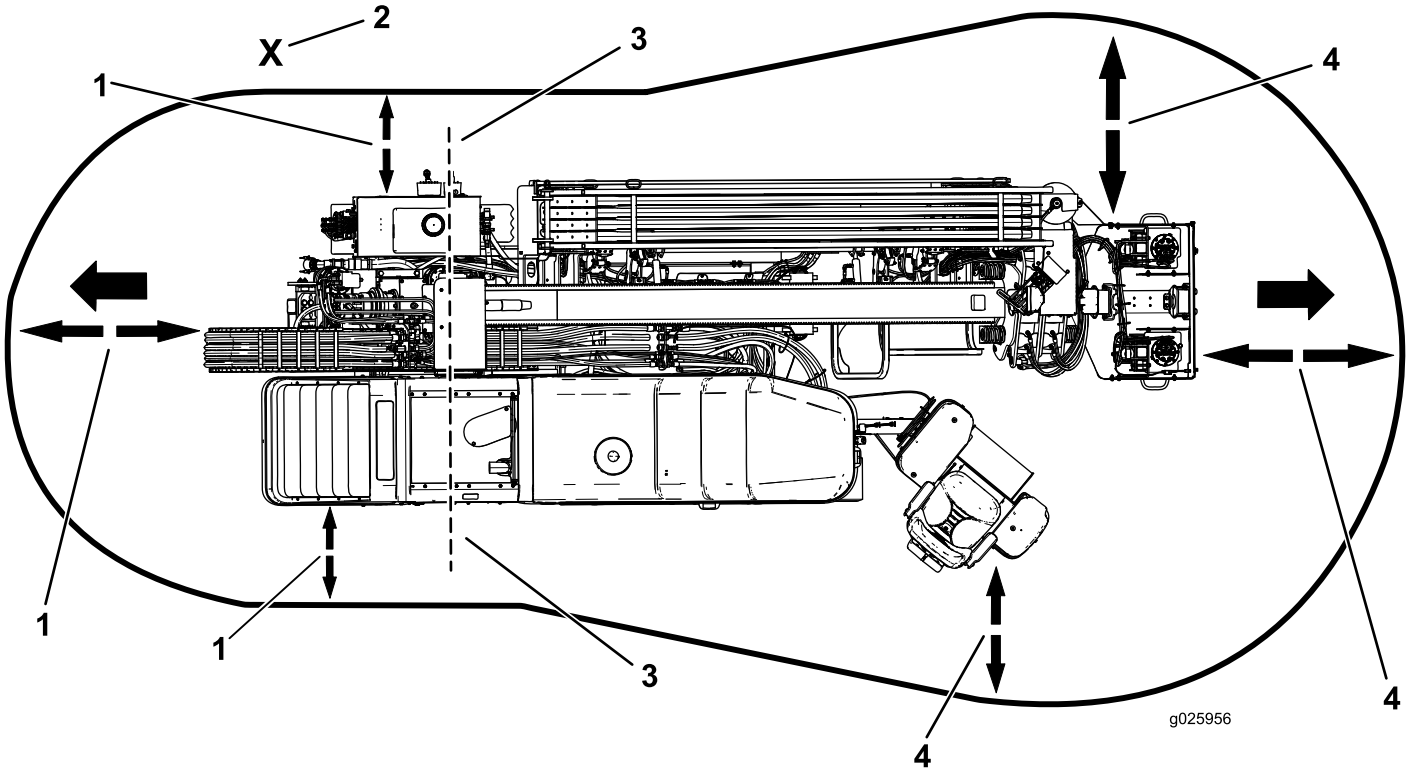

Figure 3
Driving Danger Zone

1. 1.8 m (6 ft) safety distance
2. Operator
3. Turning-radius center
4. 3 m (10 ft) safety distance

Drilling Safety

- Always lower the pedestrian safety bar before drilling (Figure 4).
- Ensure that no one approaches a pipe while it is spinning. The pipe can snag on clothing and cause amputation or death. Always engage the Exit-side Lockout before anyone approaches the front of the machine, bit, reamer, or pipe.

Drilling Danger Zone

The danger zone is the area within and around the machine where a person is exposed to the risk of injury. This proximity includes where a person is reachable by operational movement of the machine, its working devices, auxiliary equipment, or swinging/falling equipment.

The following illustration displays the safe distance required by all individuals while drilling.

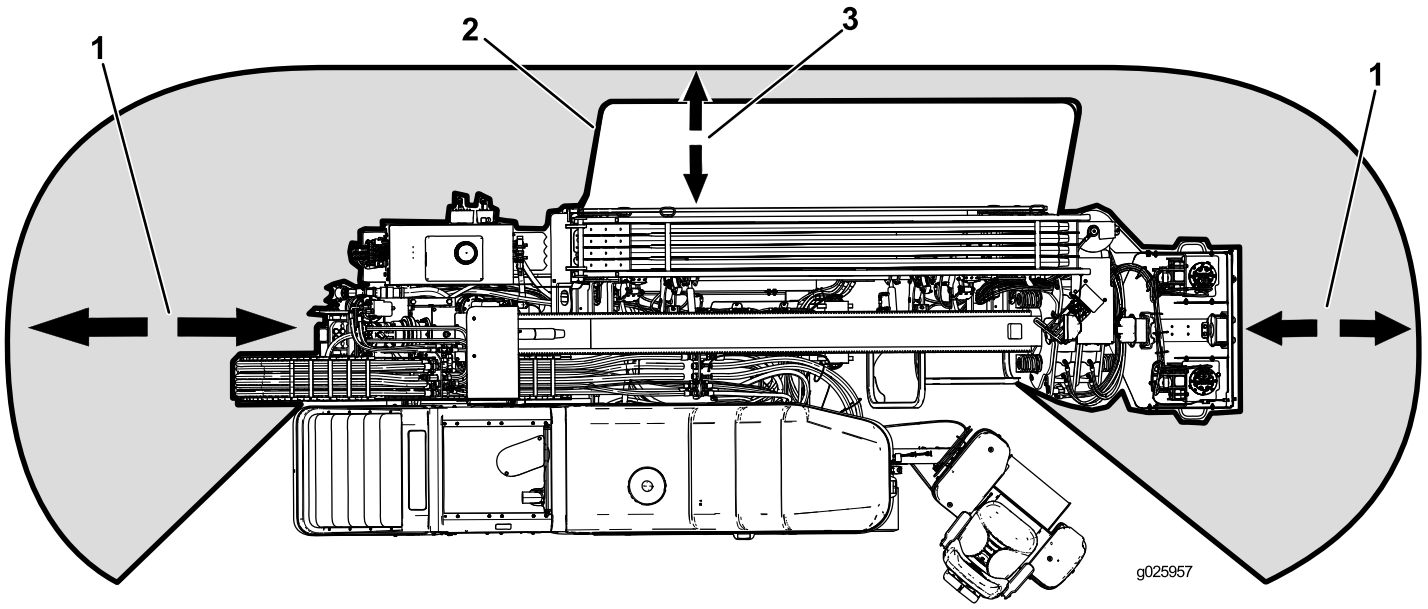

Figure 4
Drilling Danger Zone

1. 3 m (10 ft) safety distance
2. Pedestrian safety bar
3. 1.8 m (6 ft) safety distance

Drilling Near Utility Lines

Important: Before operating in an area with high-voltage lines or cables, contact a "One-Call System Directory" service. In the USA, call 811 or your local utility company. If you do not know your local utility company's phone number, call the national number (USA and Canada only) at 1-888-258-0808. Also, contact any utility companies that are not participants of the "One-Call System Directory" service.

Utility Line Color

Refer to the following table for the proper utility line and the corresponding utility line color (USA and Canada).

Utility Line	Utility Line Color
Electric	Red
Telecommunication, alarm or signal, cables, or conduit	Orange
Natural gas, oil, steam, petroleum, or other gaseous or flammable material	Yellow
Sewer and drain	Green
Drinking water	Blue
Reclaimed water, irrigation, and slurry lines	Purple
Temporary survey markings	Pink
Proposed excavation limits	White

Electrical Line Safety

⚠ WARNING

Do not leave the seat of the machine if the machine is charged with electricity.

If you leave the seat of the machine or touch any part of the machine when it is charged with electricity, serious injury or death could result.

In the event of an electric strike that charges the machine, the Zap-Alert Electric Strike alarm system will sound for as long as the machine is charged with power.

Note: Immediately contact the proper emergency and utility authorities to secure the area in the case that the machine is charged and you cannot leave the seat of the machine.

Note: It is possible to strike a utility line without the machine becoming charged.

- The alarm will sound if the drill contacts an electrical power source.
- It is likely (but not always the case) that the power-source interrupter or breaker will trip, but to ensure your safety, consider that the machine may be conducting electricity.
- Do not attempt to leave the machine.

  Important: You will be safe as long as you do not leave the seat of the machine.
- Touching any part of the machine may ground you.
- Do not allow another individual to touch or approach the machine when charged.
- The alarm may sound if a communication line is broken, but until you are certain, you must consider the alarm to be an electric strike.

Gas Line Safety

⚠ WARNING

If you damage a gas line, an immediate explosion and fire hazard could occur. Leaking gas is both flammable and explosive and may cause serious injury or death.

- **Do not smoke while operating the machine.**
- **Shut off the machine and remove the key.**
- **Remove all individuals from the work area.**
- **Immediately contact the proper emergency and utility authorities to secure the area.**

Water Line Safety

If you damage a water line, a potential flood hazard could occur.

- **Shut off the machine and remove the key.**
- **Remove all individuals from the work area.**
- **Immediately contact the proper emergency and utility authorities to secure the area.**

Communication Line Safety

Important: Refer to Electrical Line Safety (page 7) if a communication line is damaged.

⚠ CAUTION

If you damage the fiber-optic cable and look into the exposed highly-intense light, you may harm your eyes.

- **Shut off the machine and remove the key.**
- **Remove all individuals from the work area.**
- **Immediately contact the proper emergency and utility authorities to secure the area.**

Maintenance and Storage

- Do not touch parts which may be hot from operation. Allow them to cool before attempting to maintain, adjust, or service.
- Lower the thrust frame, stop the engine, and remove the key. Wait for all movement to stop before adjusting, cleaning, or repairing.
- Clean debris from attachments, drives, mufflers, and engine to help prevent fires. Clean up oil or fuel spillage.
- Let the engine cool before storing, and do not store near a flame.
- Do not store fuel near flames or drain indoors.
- Park the machine on level ground.
- Do not allow untrained personnel to service the machine.
- Carefully release pressure from components with stored energy.
- Keep hands and feet away from moving parts. If possible, do not make adjustments with the engine running.
- Disconnect the battery before making any repairs. Disconnect the negative terminal first and the positive last. Reconnect positive first and negative last.
- Charge batteries in an open, well ventilated area, away from spark and flames. Unplug the charger before connecting or disconnecting it from the battery. Wear protective clothing and use insulated tools.
- Battery acid is poisonous and can cause burns. Avoid contact with skin, eyes, and clothing. Protect your face, eyes, and clothing when working with a battery.
- Battery gases can explode. Keep cigarettes, sparks and flames away from the battery.

- Keep all parts in good-working condition and all hardware tightened. Replace all worn or damaged decals.
- If any maintenance or repair requires the frame to be in the raised position, secure the frame in the raised position with the hydraulic cylinder lock; refer to Using the Cylinder Lock (page 66).
- Keep nuts and bolts tight.
- Keep equipment in good condition.
- Do not tamper with safety devices.
- Keep the machine free of grass, leaves, or other debris build-up. Clean up oil or fuel spillage. Allow the machine to cool before storing.
- Use extra care when handling fuels. They are flammable and vapors are explosive.
  - Use only an approved container.
  - Do not remove the fuel cap or add fuel when the engine is running. Allow the engine to cool before refueling. Do not smoke.
  - Do not refuel the machine indoors.
  - Do not store the machine or fuel container inside where there is an open flame, such as near a water heater or furnace.
  - Do not fill a container while it is inside a vehicle, trunk, pick-up bed, or any surface other than the ground.
  - Keep container nozzle in contact with the tank during filling.
- Use only genuine Toro replacement parts to ensure that original standards are maintained.
- Keep your body and hands away from pin hole leaks or nozzles that eject high pressure hydraulic fluid. Use cardboard or paper to find hydraulic leaks; do not use your hands. Hydraulic fluid escaping under pressure can penetrate skin and cause injury requiring surgery within a few hours by a qualified surgeon or gangrene may result.

Noise and Vibration Levels

⚠ WARNING

The operator must wear hearing protection when operating the machine. Failure to wear hearing protection may cause hearing loss.

Sound Pressure Level

This unit has a sound pressure level at the operator's ear of 92 dBA, which includes an Uncertainty Value (K) of 1 dBA.

Sound pressure level was determined according to the procedures outlined in EN 791.

Sound Power

This unit has a guaranteed sound power level of 110 dBA, which includes an Uncertainty Value (K) of 3.75 dBA.

The sound power level was determined according to the procedures outlined in ISO 4871.

Vibration Level

Measured vibration level for right hand = 1.8 m/s^2

Measured vibration level for left hand = 1.3 m/s^2

Measured vibration level for whole body = 0.03 m/s^2

Uncertainty Value (K) = 0.02 m/s^2

Measured values were determined according to the procedures outlined in EN ISO 20643.

Safety and Instructional Decals

Safety decals and instructions are easily visible to the operator and are located near any area of potential danger. Replace any decal that is damaged or lost.



Battery Symbols

Some or all of these symbols are on your battery

1. Explosion hazard
2. No fire, open flame, or smoking.
3. Caustic liquid/chemical burn hazard
4. Wear eye protection
5. Read the *Operator's Manual.*
6. Keep bystanders a safe distance from the battery.
7. Wear eye protection; explosive gases can cause blindness and other injuries
8. Battery acid can cause blindness or severe burns.
9. Flush eyes immediately with water and get medical help fast.
10. Contains lead; do not discard.



117-2718

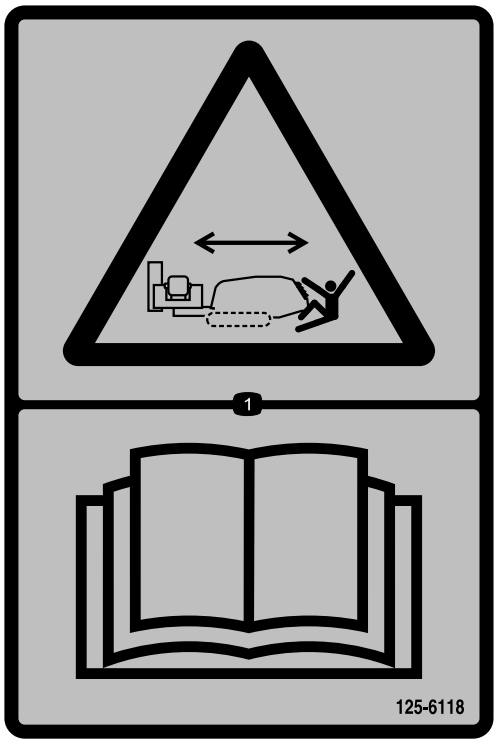

125-6118

1. Crushing hazard, machine movement—read the *Operator's Manual*.

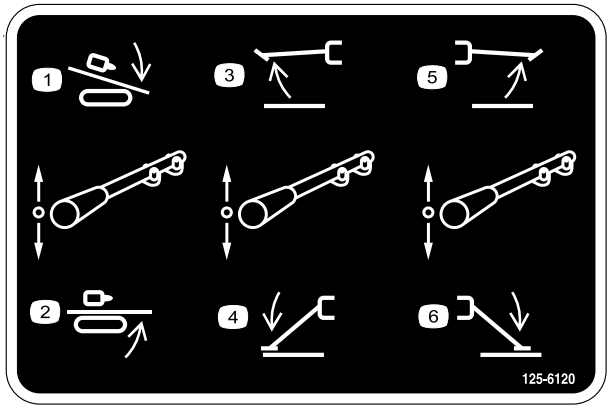

125-6120

1. Lower drill carriage
2. Raise drill carriage
3. Raise left stabilizer
4. Lower left stabilizer
5. Raise right stabilizer
6. Lower right stabilizer



125-6137

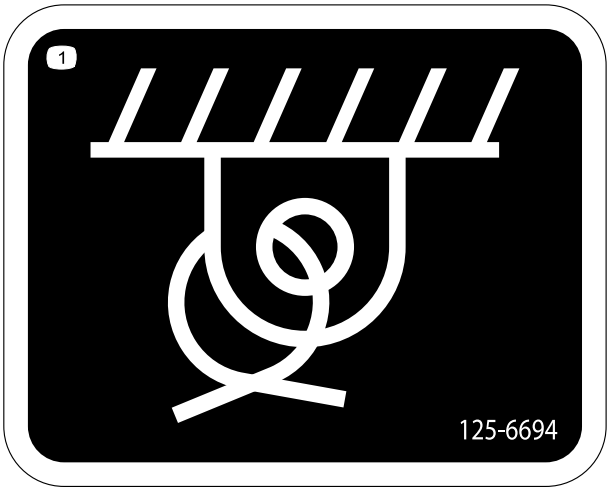

125-6694

1. Tie-down point



125-6108

1. Thrown object hazard—read the *Operator's Manual*.



125-8473

1. Explosion hazard—wear eye protection.
2. Caustic liquid/chemical burn hazard—rinse affected area and seek medical assistance.
3. Fire hazard—keep open flames away.
4. Poison hazard—do not tamper with the battery.



125-6114

1. Stored energy hazard—do not use tools; read the *Operator's Manual*.

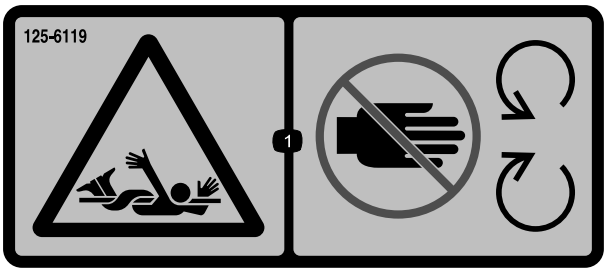

125-6119

1. Entanglement hazard—keep away from moving objects.



125-6126

1. Entanglement hazard—keep away from moving parts.



125-6131

1. Warning—stay at least 3 m (10 ft) away from the machine.

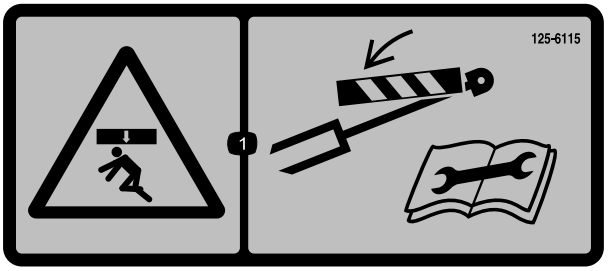

125-6115

1. Crushing hazard—deploy cylinder locks before performing maintenance.

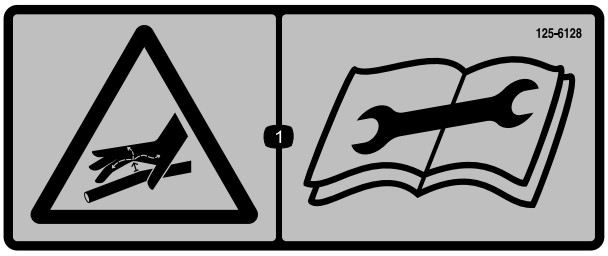

125-6128

1. High pressure fluid hazard, injection into the body—read the *Operator's Manual* before performing maintenance.

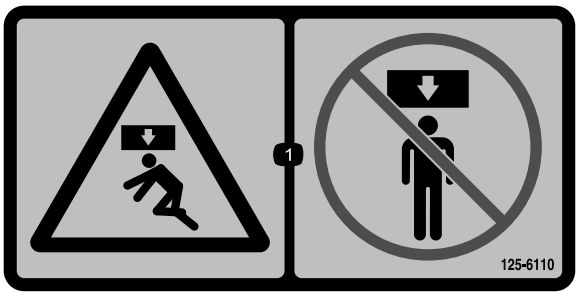

125-6110

1. Crushing hazard—do not stand under any part of the machine.

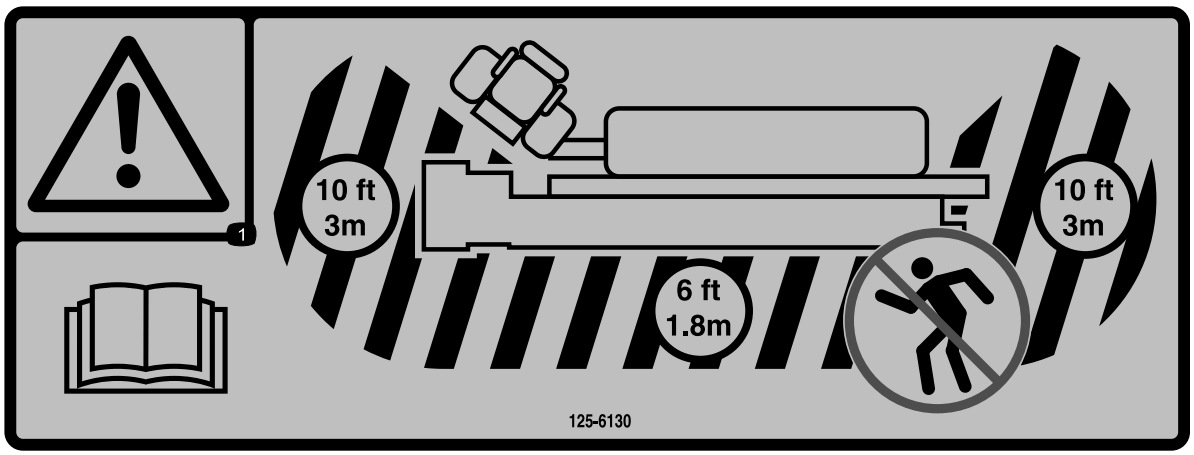

125-6130

1. Warning—read the *Operator's Manual*; stay at least 3 m (10 ft) away from the front and rear of the machine and 1.8 m (6 ft) away from the sides of the machine.



125-6109

1. Electrical shock hazard—when the Zap-Alert system is activated by a power strike, do not leave the operator's position or touch the ground and the machine at the same time; the machine will be energized with electrical power.

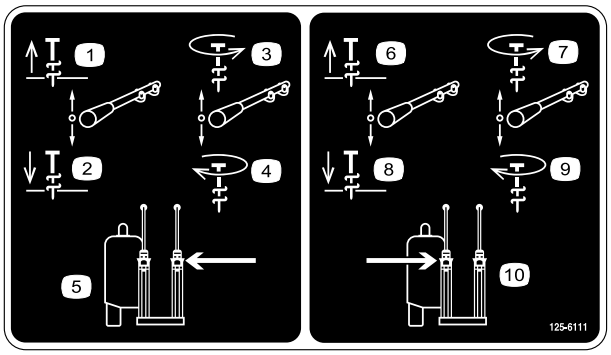

125-6111

1. Stake up
2. Stake down
3. Stake spin counterclockwise
4. Stake spin clockwise
5. Left stake
6. Stake up
7. Stake spin counterclockwise
8. Stake down
9. Stake spin clockwise
10. Right stake

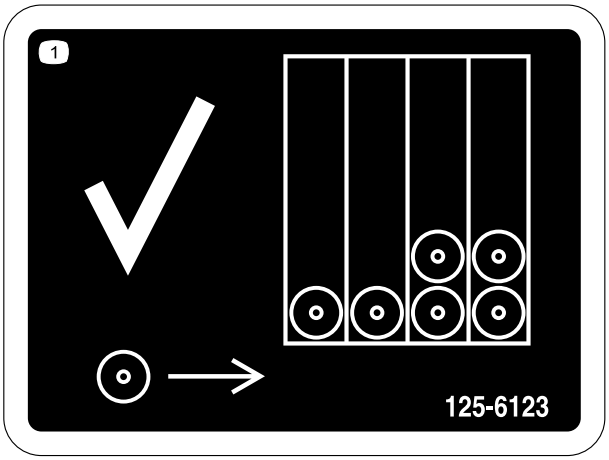

125-6123

1. Load pipes from back row first.

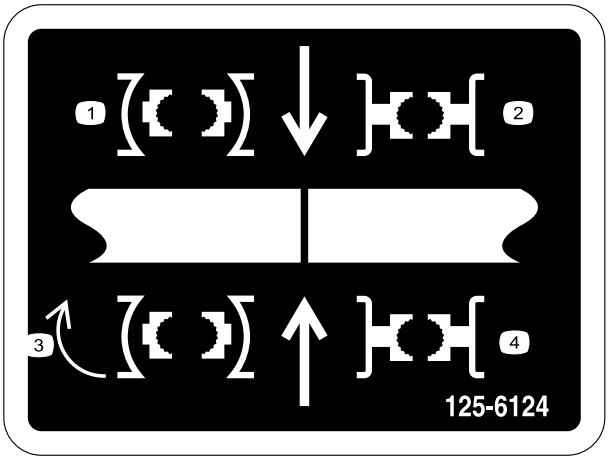

125-6124

1. Center the pipe joint between the upper (makeup/breakout wrench) and lower wrenches (stationary wrench).



125-6107

1. Crushing hazard of hand and foot—keep hands and feet away.



125-6116

1. Falling hazard—do not move the machine when someone is in the operator's position.

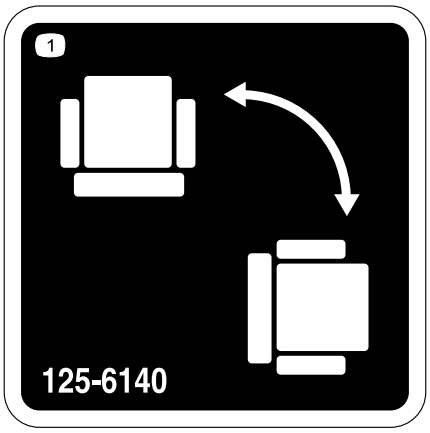

125-6140

1. Rotate the chair.

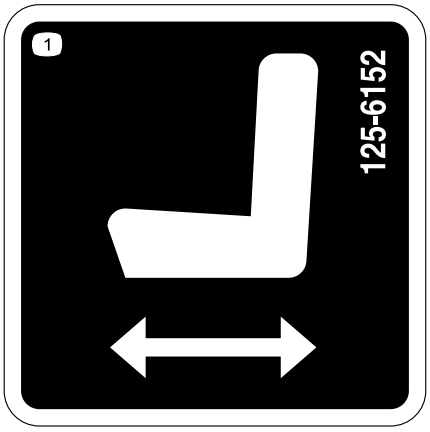

125-6152

1. Move seat forwards and backwards.

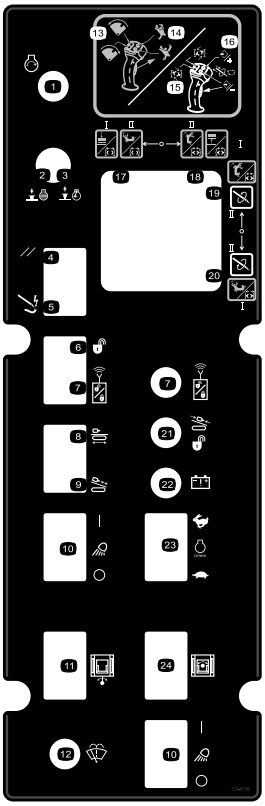

125-6158

Model with Cab only

1. Engine—start
2. Press down to stop the engine
3. Pull up to start the engine
4. Reset Zap-Alert system
5. Zap-Alert system triggered
6. Unlock exit-side lockout
7. Reset exit-side lockout
8. Engage drive movement and setup functions
9. Engage drill carriage movement and other drill functions
10. Turn the work light On or Off
11. Swing the cab in or out
12. Windshield-wiper control
13. With trigger released, rock forward to rotate basket toward pipe cam, rock backward to rotate basket toward drill frame.
14. With trigger released, upper button closes pipe gripper, lower button opens pipe gripper.
15. With trigger pressed, rock forward to rotate the upper wrench (makeup/breakout wrench) counterclockwise to loosen a joint; rock rearward to rotate the upper wrench (makeup/breakout wrench) clockwise to tighten a joint.
16. With trigger pressed, press front or rear button to resume the previously set auto-drill speed; press and hold the front button to increase the auto-drill speed; press and hold the rear button to decrease the auto-drill speed.
17. Mode I—left trigger released, extends pipe gripper toward drill frame; left trigger pressed, opens lower wrench (stationary wrench). Mode II—spin drill spindle clockwise.
18. Mode I—left trigger released, extends pipe gripper toward pipe holder; left trigger pressed, closes lower wrench (stationary wrench). Mode II—spin drill spindle counterclockwise.
19. Mode I—left trigger released, lowers pipe elevator; left trigger pressed, opens upper wrench (makeup/breakout wrench). Mode II—left trigger released, extends pipe gripper toward drill frame; left trigger pressed, opens upper wrench (makeup/breakout wrench).
20. Mode I—left trigger released, raises pipe elevator; left trigger pressed, closes upper wrench (makeup/breakout wrench). Mode II—left trigger released, extends pipe gripper toward pipe holder; left trigger pressed, closes upper wrench (makeup/breakout wrench).
21. Exit-side lockout—drill-enabled light
22. Transmitter-battery-status Light
23. Increase or decrease the engine speed
24. Rotate the cab clockwise or counterclockwise

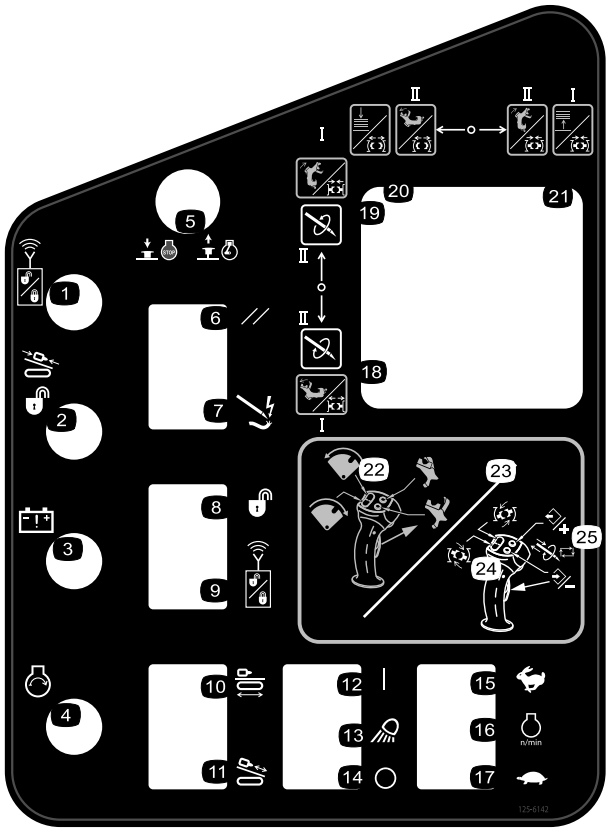

125-6142

1. Exit-side lockout—reset light
2. Exit-side lockout—drill-enabled light
3. Transmitter-battery-status light
4. Engine—start
5. Press down to stop the engine; pull up to start the engine.
6. Reset Zap-Alert system
7. Zap-Alert system triggered
8. Unlock exit-side lockout
9. Reset exit-side lockout
10. Engage drive movement and setup functions
11. Engage drill carriage movement and other drill functions
12. Work lights—On
13. Work lights
14. Work lights—Off
15. Press and hold to increase engine speed.
16. Engine speed
17. Press and hold to decrease engine speed.
18. Mode I—left trigger released, extends pipe gripper toward drill frame; left trigger pressed, opens lower wrench (stationary wrench). Mode II—spin drill spindle clockwise.
19. Mode I—left trigger released, extends pipe gripper toward pipe holder; left trigger pressed, closes lower wrench (stationary wrench). Mode II—spin drill spindle counterclockwise.
20. Mode I—left trigger released, lowers pipe elevator; left trigger pressed, opens upper wrench (makeup/breakout wrench). Mode II—left trigger released, extends pipe gripper toward drill frame; left trigger pressed, opens upper wrench (makeup/breakout wrench).
21. Mode I—left trigger released, raises pipe elevator; left trigger pressed, closes upper wrench (makeup/breakout wrench). Mode II—left trigger released, extends pipe gripper toward pipe holder; left trigger pressed, closes upper wrench (makeup/breakout wrench).
22. With trigger released, rock forward to rotate basket toward pipe cam, rock backward to rotate basket toward drill frame.
23. With trigger released, upper button closes pipe gripper, lower button opens pipe gripper.
24. With trigger pressed, rock forward to rotate the upper wrench (makeup/breakout wrench) counterclockwise to loosen a joint; rock rearward to rotate the upper wrench (makeup/breakout wrench) clockwise to tighten a joint.
25. With trigger pressed, press front or rear button to resume the previously set auto-drill speed; press and hold the front button to increase the auto-drill speed; press and hold the rear button to decrease the auto-drill speed.

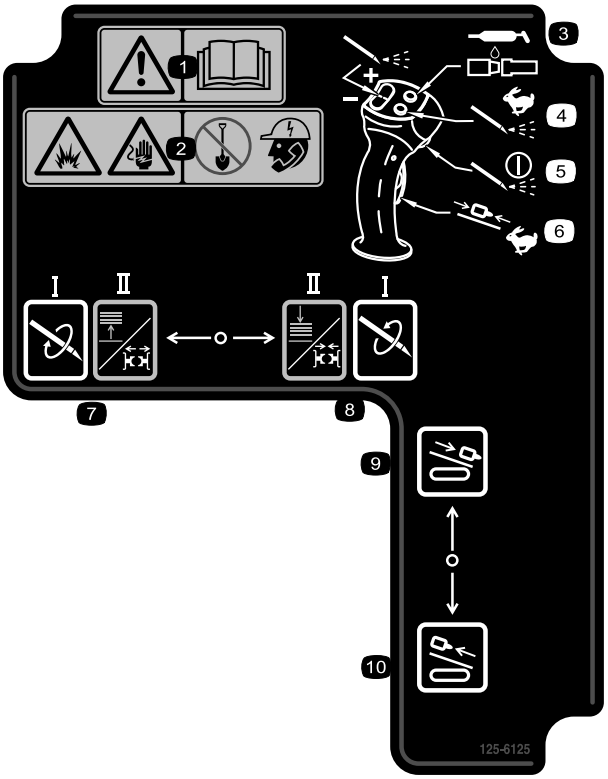

125-6125

1. Warning—read the *Operator's Manual*.
2. Explosion hazard; electrical shock hazard—do not dig before calling local services.
3. Press to apply thread-joint compound.
4. Press and hold for maximum drilling fluid pressure; release to stop the flow.
5. Press to turn the drilling-fluid pump on or off.
6. Press and hold to move the drill carriage at high speed up or down the drill frame.
7. Mode I—spin drill spindle clockwise. Mode II—left trigger pressed, open the lower wrench (stationary wrench); left trigger released, raise the pipe elevator.
8. Mode I—spin drill spindle counterclockwise. Mode II—left trigger pressed, close the lower wrench (stationary wrench); left trigger released, lower the pipe elevator.
9. Thrust the drill carriage forward.
10. Pull the drill carriage rearward.

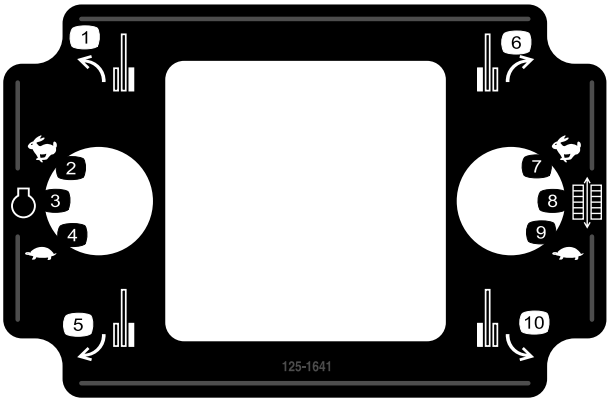

125-1641

1. Forward left
2. Increase rpm
3. Engine speed
4. Decrease rpm
5. Reverse left
6. Forward right
7. High
8. Track speed
9. Low
10. Reverse right

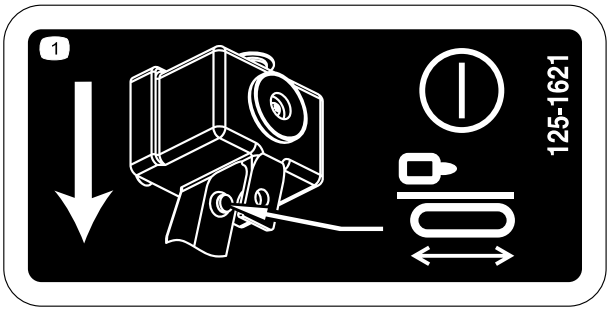

125-1621

1. Press the operator presence switch to enable machine movement.

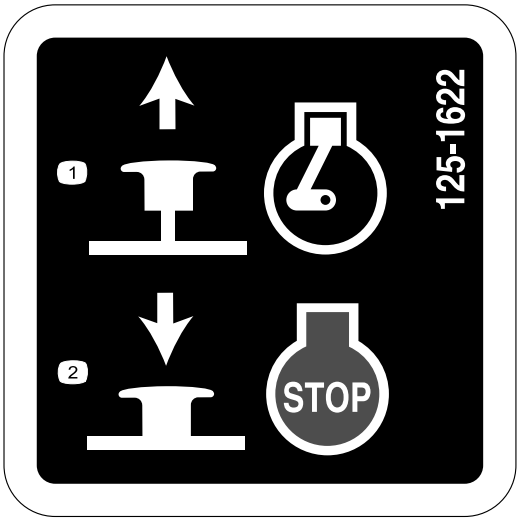

125-1622

1. Pull up to start the engine.
2. Push down to stop the engine.

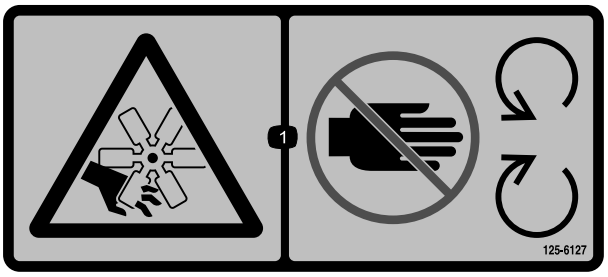

125-6127

1. Cutting/dismemberment hazard, fan—keep away from moving parts.



125-6129

1. Hot surface—keep away from hot surfaces.

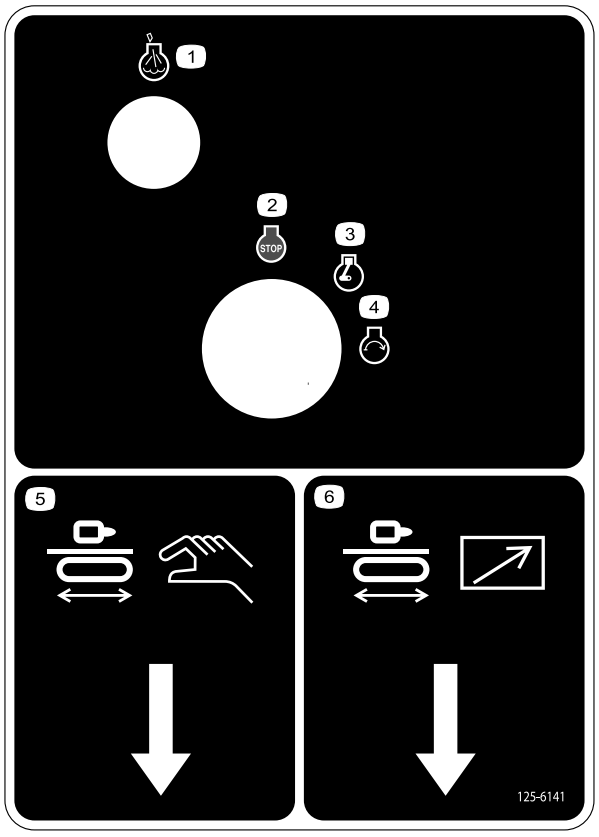

125-6141

1. Engine—heating light
2. Engine—stop
3. Engine—run
4. Engine—start
5. Drill-pendant receptacle
6. Drive-pendant receptacle

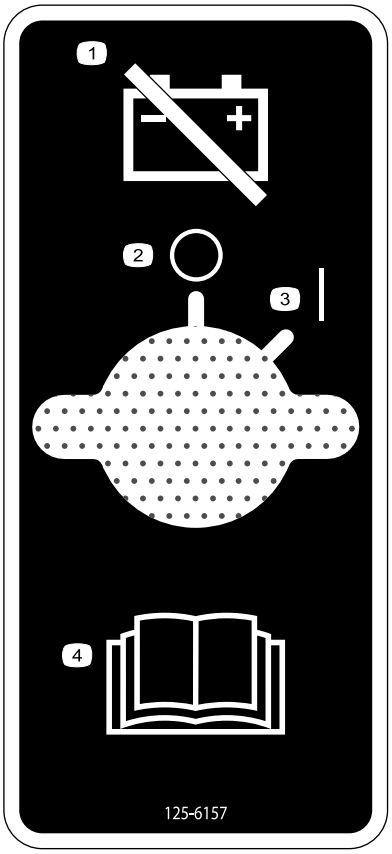

125-6157

1. Disconnect the battery power.
2. Off/Stop
3. On/Start
4. Read the *Operator's Manual*.

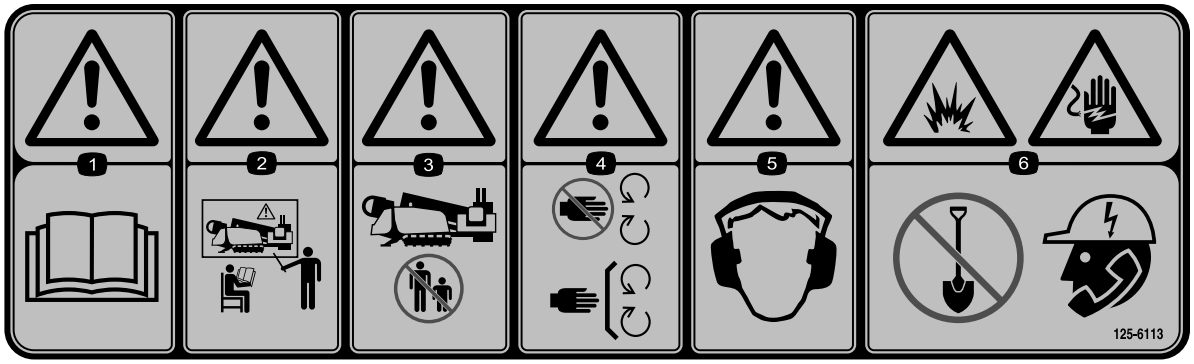

125-6113

1. Warning—read the *Operator's Manual*.
2. Warning—do not operate the machine unless you are trained.
3. Warning—keep bystanders away from the machine.
4. Warning—keep away from moving parts; keep all guards and shields in place.
5. Warning—wear hearing protection.
6. Explosion hazard, electrical shock hazard; do not dig before calling local utilities.



125-6117

1. Falling hazard—do not stand on the machine while it is moving.

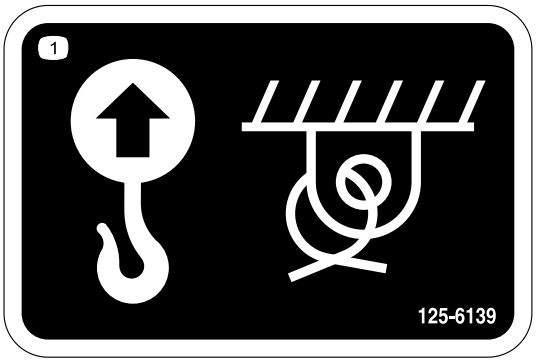

125-6139

1. Lift point and tie-down point

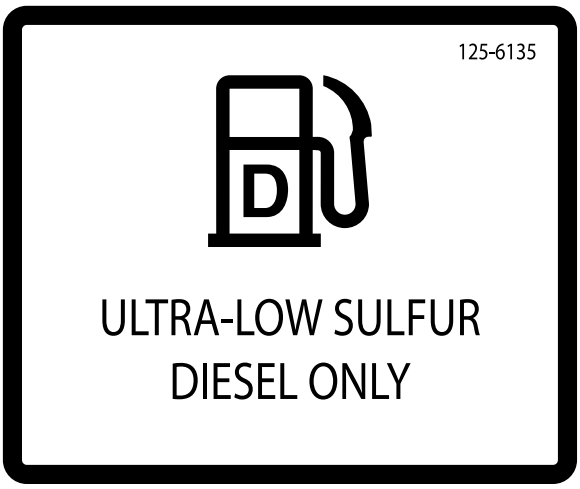

125-6135

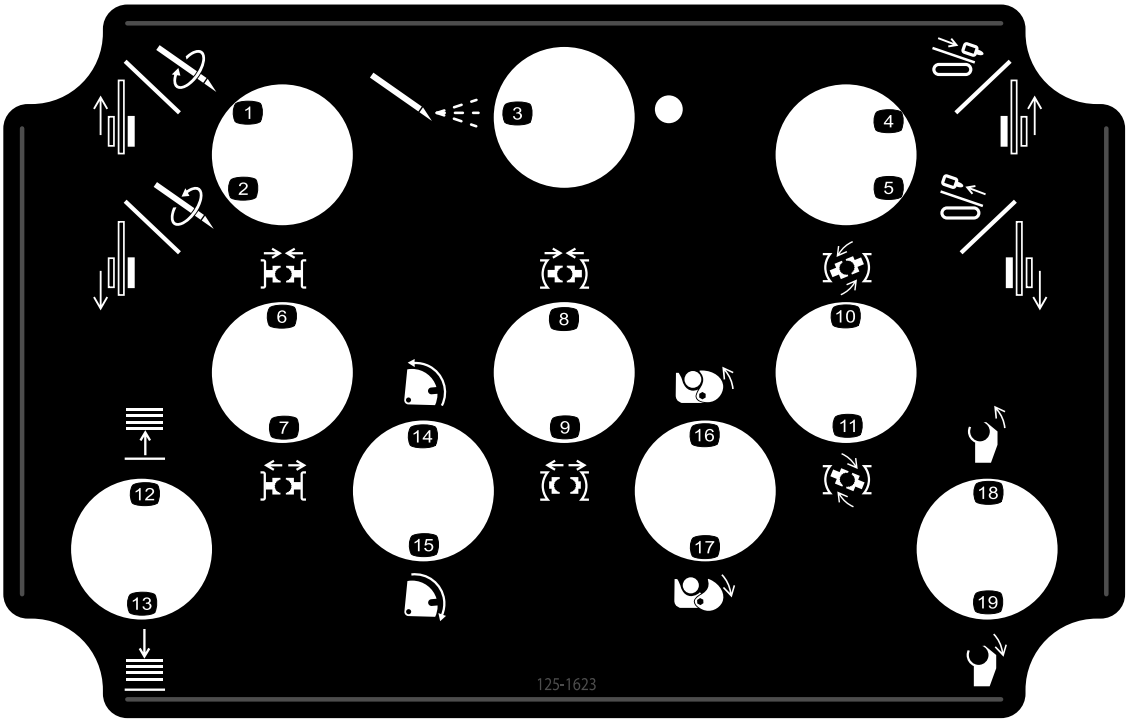

125-1623

1. Forward left track/forward rotary
2. Reverse left track/reverse rotary
3. Drilling fluid pump on
4. Forward right track/forward carriage
5. Reverse right track/reverse carriage
6. Tighten lower wrench (stationary wrench)
7. Loosen lower wrench (stationary wrench)
8. Tighten upper wrench (makeup/breakout wrench)
9. Loosen upper wrench
10. Wrench breakout (for upper wrench)
11. Wrench makeup (for upper wrench)
12. Raise pipe elevator
13. Lower pipe elevator
14. Reverse cam rotation
15. Forward (toward operator) cam rotation
16. Tighten pipe grip
17. Loosen pipe grip
18. Reverse drill spindle
19. Forward (toward operator) drill spindle

Product Overview

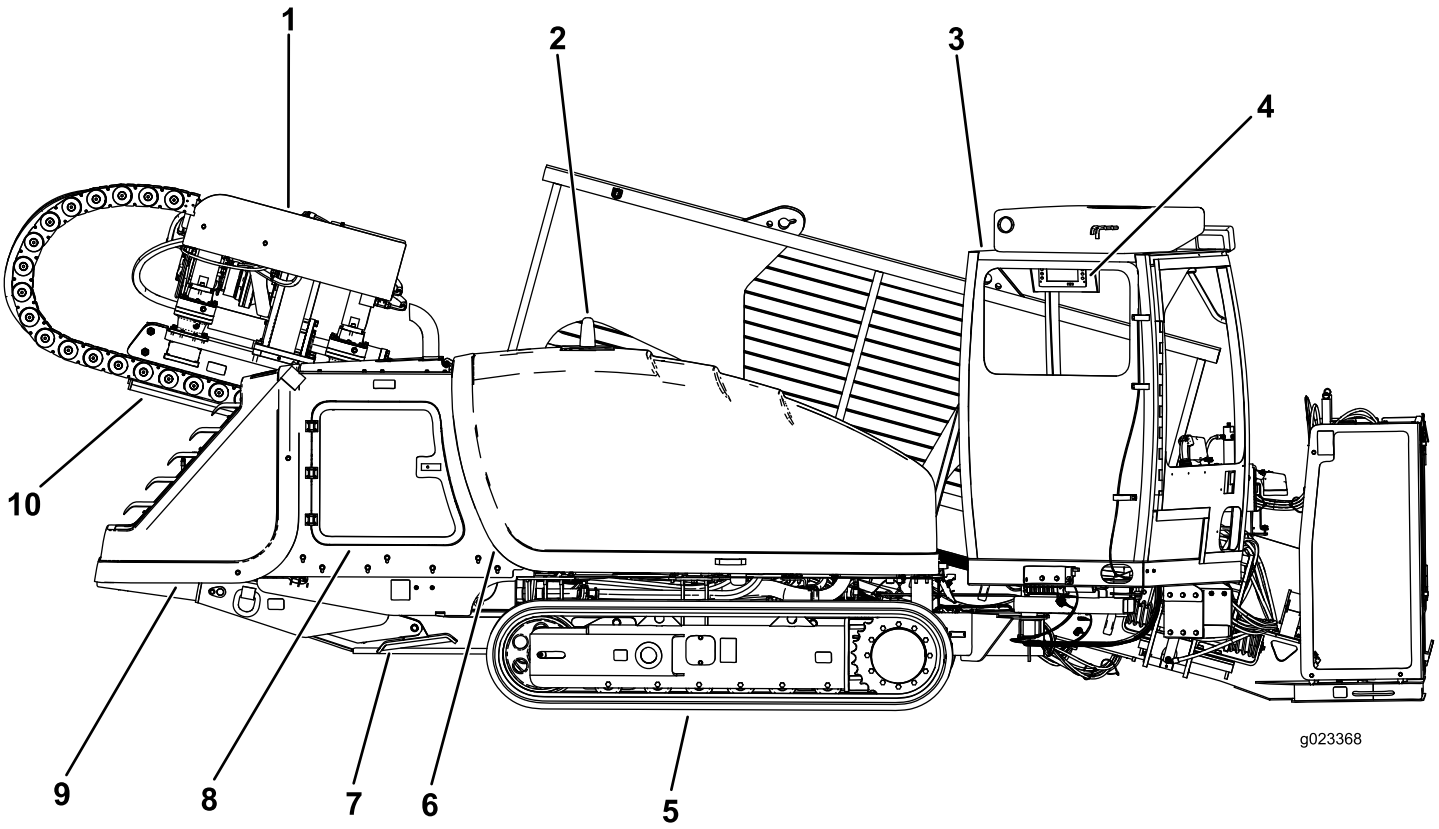

Figure 5

1. Drill carriage
2. Zap-alert strobe
3. Cab
4. Monitor
5. Track
6. Front hood
7. Right stabilizer
8. Rear-access door
9. Rear hood
10. Thrust frame

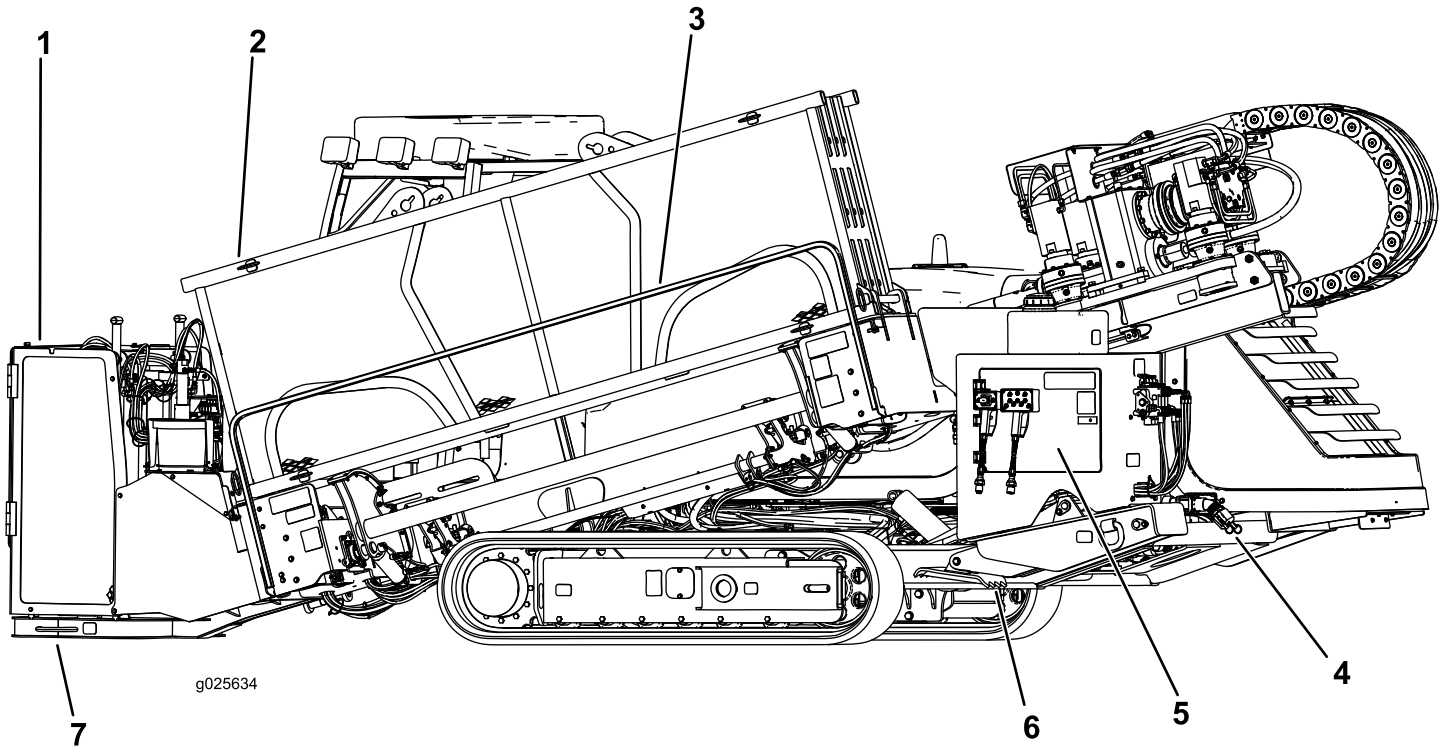

Figure 6

1. Stake-down cage
2. Pipe holder
3. Pedestrian safety bar
4. Drilling-fluid-pump inlet
5. Rear-control panel
6. Left stabilizer
7. Stake-down plate

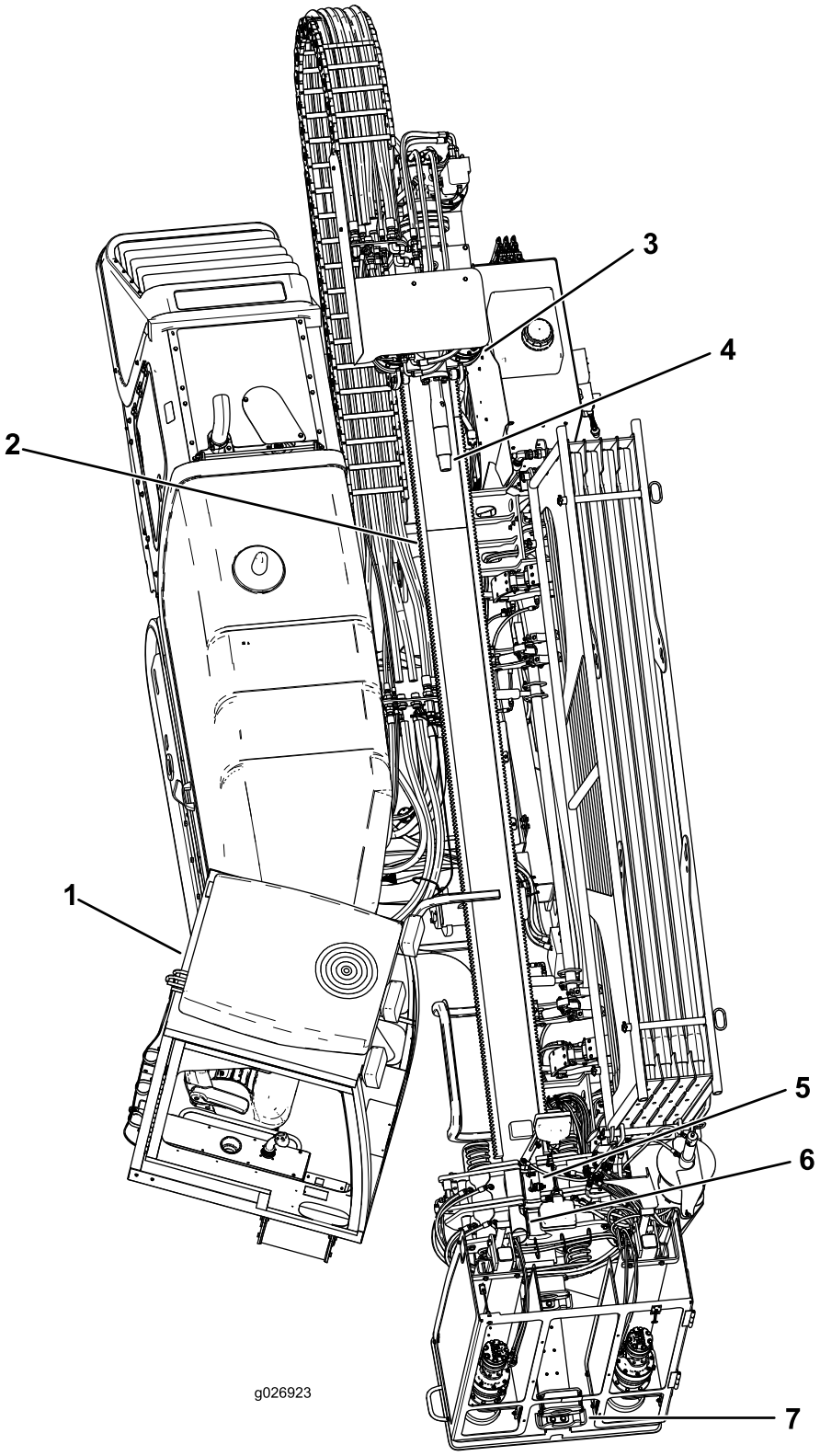

Figure 7

1. Cab
2. Thrust frame
3. Drill carriage
4. Drill spindle
5. Upper wrench (makeup/breakout wrench)
6. Lower wrench (stationary wrench)
7. Pipe wiper

Controls

Refer to the following sections for the appropriate machine controls:

- The Software Guide for this machine.
- Operator Platform (page 24)
- Control Panel (page 25)
- Left Joystick—Mode I (page 26)
- Left Joystick—Mode II (page 27)
- Right Joystick—Mode I (page 28)
- Right Joystick—Mode II (page 29)
- Exit-Side-Lockout System (page 30)
- Rear Control Panel (page 30)
- Drill Frame and Stabilizer Controls (page 31)
- Drive Pendant (page 31)
- Drill Pendant (page 32)
- Stake-Down Levers (page 34)
- Battery-Disconnect Switch (page 34)

Operator Platform

The operator platform, located on the right, front corner of the machine, contains most of the controls that you use to operate the drilling functions of the machine.

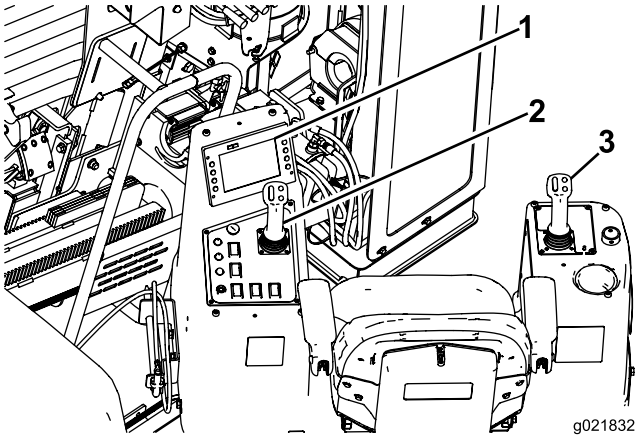

Figure 8

1. Operator display
2. Left control panel and joystick
3. Right joystick

Operator-Controls Covers

The covers protect the operator controls from adverse weather conditions, such as rain, wind, sunlight, etc. Remove them before using the machine and replace them before leaving the machine for the day. Each cover is secured with 2 screws as shown in Figure 9.

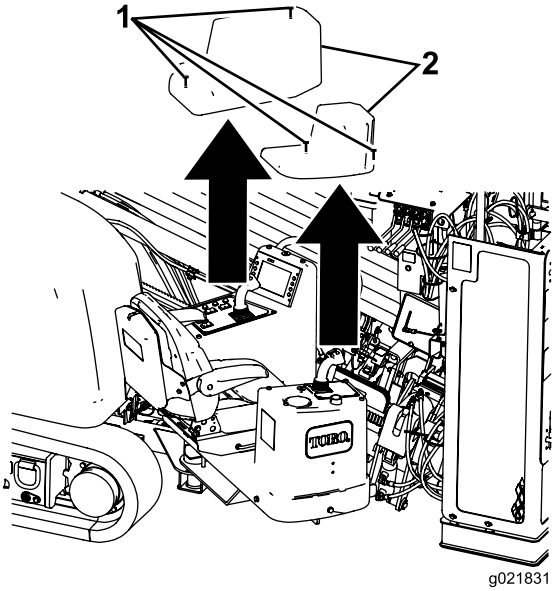

Figure 9

1. Screws
2. Covers

Operator-Platform Latch

The operator platform swings out away from the machine, making room for you to sit. It has 4 positions: travel (swung all the way into the machine), full-out, and 2 intermediate positions. Return the platform to the TRAVEL position before moving the machine.

To release the platform and swing it out or in, press down on the rear platform latch (Figure 10).

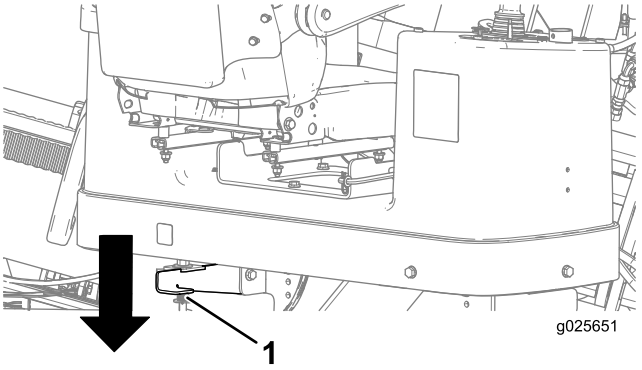

Figure 10

1. Rear platform latch

To release the platform and swing it out or in, press up on the front platform latch (Figure 11).

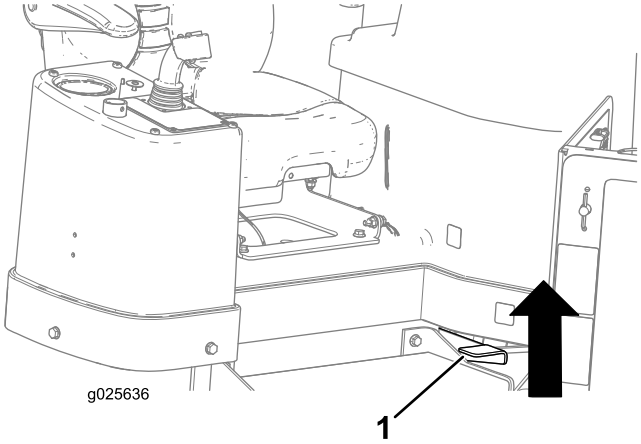

Figure 11

1. Front platform latch

Control Panel

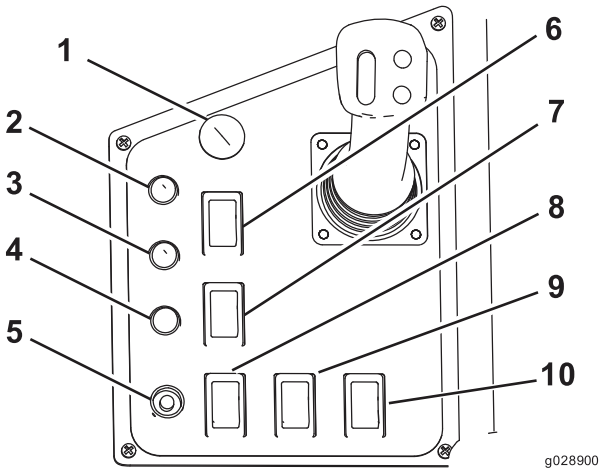

Figure 12

1. Engine-stop button
2. Exit-side lockout—reset light
3. Exit-side lockout—drill-enabled light
4. Receiver-battery-status light
5. Engine-start button
6. Ground-strike-reset switch
7. Exit-side-lockout—reset switch
8. Drive/drill switch
9. Lights switch
10. Engine-speed switch

Exit-Side Lockout—Reset Light

This light (Figure 12) illuminates yellow when the exit-side lockout function is turned off on exit-side-lockout transmitter, indicating that you may reset the system.

Exit-Side Lockout—Drill-enabled Light

This light (Figure 12) illuminates green when the exit-side-lockout feature has been turned off and reset and the machine is ready to drill.

Exit-Side Lockout—Reset Switch

Press this switch (Figure 12) to enable drilling operation when the reset light illuminates.

Transmitter-Battery-Status Light

This light (Figure 12) illuminates red when the battery on the exit-side-lockout transmitter is too low to transmit. Stop drilling operations and fix the problem with the transmitter before continuing.

Engine-Start Button

Press this button (Figure 12) to start the engine. The key switch on the rear, control panel must be in the ON position.

Engine-Stop Button

Press this button (Figure 12) to immediately stop the engine and all drilling operations. You must pull this button out before you can start the engine again.

Ground-Strike-Reset Switch

Press this switch (Figure 12) to reset the Zap-Alert system after a ground strike has occurred and been fixed; refer to Deploying the Zap-Alert System (page 49).

Drive/Drill Switch

Press the top of this switch (Figure 12) to enable the drive and setup controls or the bottom to enable drill and pipe-loader functions.

Lights Switch

Press the top of this switch (Figure 12) to turn the machine lights on or the bottom of this switch to turn them off.

Engine-Speed Switch

- Press and hold the top of this switch to increase the engine speed.
- Press and hold the bottom of this switch to decrease the engine speed.
- Release the switch to maintain the current engine speed.

Left Joystick—Mode I

Note: The joystick controls vary depending on the control mode you select when powering up the machine. There are 2 control modes: Mode I and Mode II; refer to the Control-Select Screen in the *Software Guide* for this machine for information on setting the control mode.

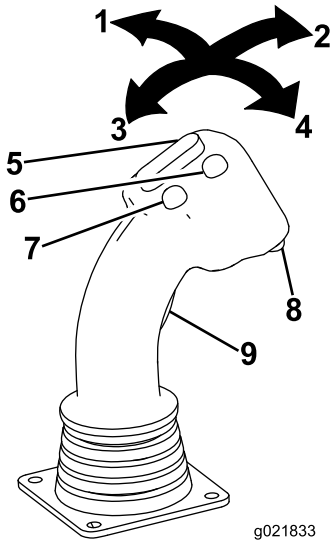

Figure 13

1. Joystick—move left
2. Joystick—move forward
3. Joystick—move rearward
4. Joystick—move right
5. Toggle switch
6. Front button
7. Rear button
8. Lower button
9. Trigger

Trigger

The trigger changes the other joystick controls from pipe-loader controls to wrench-operation controls.

- Press the trigger to enable the wrench controls.
- Release the trigger to enable the pipe-loader controls.

Toggle Switch

- Left trigger pressed—rock the switch forward to rotate the upper wrench (makeup/breakout wrench) clockwise to loosen a joint; rock the switch rearward to rotate the upper wrench (makeup/breakout wrench) counterclockwise to tighten a joint.
- Left trigger released—rock the switch forward to rotate the pipe cam out toward the basket; rock the switch rearward to rotate the pipe cam toward the drill frame.

Front Button

- Left trigger pressed—press this button to resume the previously set auto-drill speed. Press and hold this button to increase the auto-drill speed.
- Left trigger released—press this button to close the pipe gripper.

Rear Button

- Left trigger pressed—press this button to set the auto drill speed. Press and hold this button to decrease the auto-drill speed.
- Left trigger released—press this button to open the pipe gripper.

Lower Button

If the sensor fails, use this button to override the pipe cam presets and manually move the cam. Operate in this mode only when necessary; you could damage the pipe cam or pipes if you do not align them correctly. If the sensor fails, contact your Authorized Toro Dealer for repair.

Joystick—Forward

- Left trigger pressed—closes the lower wrench (stationary wrench).
- Left trigger released—retracts the pipe gripper toward the pipe holder.

Joystick—Rearward

- Left trigger pressed—opens the lower wrench (stationary wrench).
- Left trigger released—extends the pipe gripper toward the drill frame.

Joystick—Left

- Left trigger pressed—opens the upper wrench (makeup/breakout wrench).
- Left trigger released—lowers the pipe elevator.

Joystick—Right

- Left trigger pressed—closes the upper wrench (makeup/breakout wrench).
- Left trigger released—raises the pipe elevator.

Left Joystick—Mode II

Note: The joystick controls vary depending on the control mode you select when powering up the machine. There are 2 control modes: Mode I and Mode II; refer to the Control-Select Screen in the *Software Guide* for this machine for information on setting the control mode.

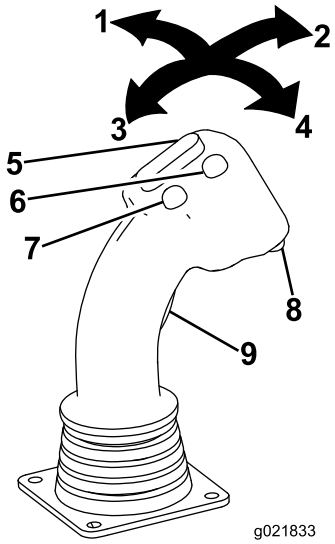

Figure 14

1. Joystick—move left
2. Joystick—move forward
3. Joystick—move rearward
4. Joystick—move right
5. Toggle switch
6. Front button
7. Rear button
8. Lower button
9. Trigger

Trigger

The trigger changes the other joystick controls from pipe-loader controls to wrench-operation controls.

- Press the trigger to enable the wrench controls.
- Release the trigger to enable the pipe-loader controls.

Toggle Switch

- Left trigger pressed—rock the switch forward to rotate the upper wrench (makeup/breakout wrench) clockwise to loosen a joint; rock the switch rearward to rotate the upper wrench (makeup/breakout wrench) counterclockwise to tighten a joint.
- Left trigger released—rock the switch forward to rotate the pipe cam out toward the basket; rock the switch rearward to rotate the pipe cam toward the drill frame.

Front Button

- Left trigger pressed—press this button to resume the previously set auto-drill speed. Press and hold this button to increase the auto-drill speed.
- Left trigger released—press this button to close the pipe gripper.

Rear Button

- Left trigger pressed—press this button to set the auto drill speed. Press and hold this button to decrease the auto-drill speed.
- Left trigger released—press this button to open the pipe gripper.

Lower Button

If a sensor fails, use this button to override the pipe cam presets and manually move the cam. Operate in this mode only when necessary; you could damage the pipe cam or pipes if you do not align them correctly. If the sensor fails, contact your Authorized Toro Dealer for repair.

Joystick—Forward

Push the joystick forward to spin the drill spindle counterclockwise.

Joystick—Rearward

Pull the joystick rearward to spin the drill spindle clockwise.

Joystick—Left

- Left trigger pressed—opens the upper wrench (makeup/breakout wrench).
- Left trigger released—extends the pipe gripper toward the drill frame.

Joystick—Right

- Left trigger pressed—closes the upper wrench (makeup/breakout wrench).
- Left trigger released—retracts the pipe gripper toward the pipe holder.

Right Joystick—Mode I

Note: The joystick controls vary depending on the control mode you select when powering up the machine. There are 2 control modes: Mode I and Mode II; refer to the Control-Select Screen in the *Software Guide* for this machine for information on setting the control mode.

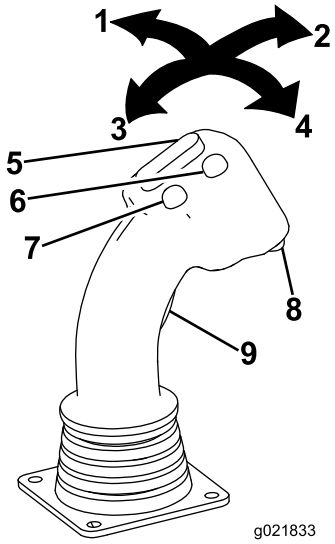

Figure 15

1. Joystick—move left
2. Joystick—move forward
3. Joystick—move rearward
4. Joystick—move right
5. Toggle switch
6. Front button
7. Rear button
8. Lower button
9. Trigger

Toggle Switch

Rock the switch forward to increase the flow rate of the drilling fluid; rock the switch rearward to decrease the flow rate of the drilling fluid.

Note: Before using this feature you must first turn on the drilling-fluid pump using the lower button on the right joystick.

Front Button

Press this button to apply thread-joint compound.

Rear Button

Press and hold this button for maximum drilling fluid pressure; use this to quickly fill the pipe with drilling fluid after adding or removing a pipe. Release the button to stop the flow or return to the previously set flow rate.

Lower Button

Press this button to turn the drilling-fluid pump on or off.

Trigger

Press and hold the trigger to move the drill carriage at high speed up or down the drill frame.

Joystick—Forward

Push the joystick forward to thrust the drill carriage forward.

Joystick—Rearward

Pull the joystick rearward to pull the drill carriage rearward.

Joystick—Left

Push the joystick left to spin the drill spindle clockwise.

Joystick—Right

Push the joystick right to spin the drill spindle counterclockwise.

Right Joystick—Mode II

Note: The joystick controls vary depending on the control mode you select when powering up the machine. There are 2 control modes: Mode I and Mode II; refer to the Control-Select Screen in the *Software Guide* for this machine for information on setting the control mode.

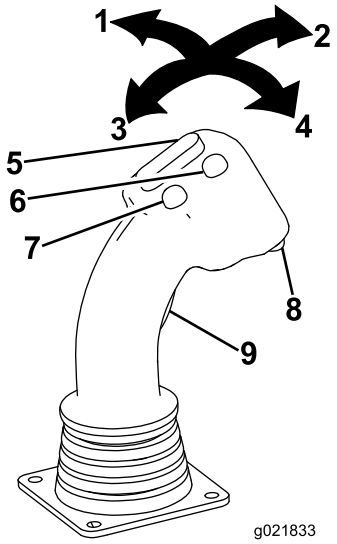

Figure 16

1. Joystick—move left
2. Joystick—move forward
3. Joystick—move rearward
4. Joystick—move right
5. Toggle switch
6. Front button
7. Rear button
8. Lower button
9. Trigger

Toggle Switch

Rock the switch forward to increase the flow rate of the drilling fluid; rock the switch rearward to decrease the flow rate of the drilling fluid.

Note: Before using this feature you must first turn on the drilling-fluid pump using the lower button on the right joystick.

Front Button

Press this button to apply thread-joint compound.

Rear Button

Press and hold this button for maximum drilling fluid pressure; use this to quickly fill the pipe with drilling fluid after adding or removing a pipe. Release the button to stop the flow or return to the previously set flow rate.

Lower Button

Press this button to turn the drilling-fluid pump on or off.

Trigger

Press and hold the trigger to move the drill carriage at high speed up or down the drill frame.

Joystick—Forward

Push the joystick forward to thrust the drill carriage forward.

Joystick—Rearward

Pull the joystick rearward to pull the drill carriage rearward.

Joystick—Left

- Left trigger pressed—opens the lower wrench (stationary wrench).
- Left trigger released—raises the pipe elevator.

Joystick—Right

- Left trigger pressed—closes the lower wrench (stationary wrench).
- Left trigger released—lowers the pipe elevator.

Exit-Side-Lockout System

The exit-side-lockout system provides the individuals working around the machine with a means to disable the drill pipe from rotating and thrusting.

For more information and instructions, refer to the *Operator's Manual* for the Exit-side-lockout system.

Rear Control Panel

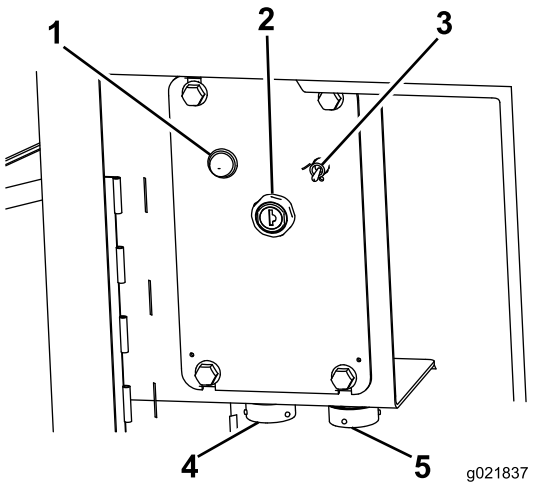

Figure 17

1. Engine-heating light
2. Engine, key switch
3. Fluid-pump switch
4. Drill-pendant receptacle
5. Drive-pendant receptacle

Engine-Heating Light

When the engine is cold, the heater warms the intake air to enable easier starting. This light illuminates while the heater is on. Wait until this light turns off before starting the engine.

Engine Key Switch

The key switch has 3 positions as follows (Figure 18):

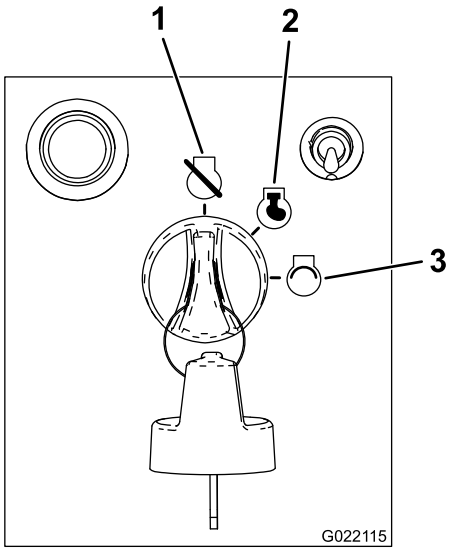

Figure 18

1. Engine-off position
2. Engine-run position
3. Engine-start position

- Engine-off position—turn the key to this position to stop the engine. You cannot start the engine from the operator platform when the key is in this position.
- Engine-run position—turn the key to this position after starting the engine. Turning the key to this position also enables the engine start button from the operator platform.
- Engine-start position—turn the key to this position to start the engine. Release the key to the RUN position once the engine has started.

Fluid-Pump Switch

Use this switch to turn on the fluid pump to use the spray gun when cleaning the machine (Figure 17).

Drill-Pendant Receptacle

Plug the drill pendant into this receptacle to attach it to the machine (Figure 17).

Drive-Pendant Receptacle

Plug the drive pendant into this receptacle to attach it to the machine (Figure 17).

Drill Frame and Stabilizer Controls

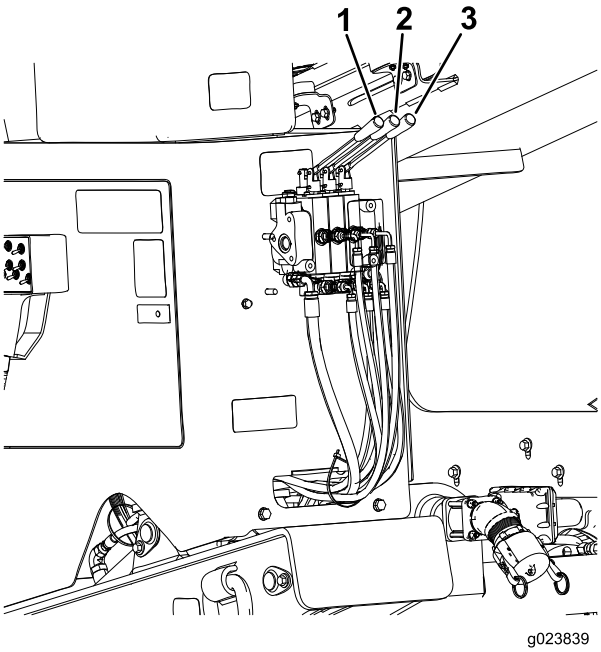

Figure 19

1. Drill-frame tilt lever
2. Left-stabilizer lever
3. Right-stabilizer lever

Stabilizer Levers

Use the stabilizer levers to raise and lower the stabilizers.

Note: The Drive/Drill switch on the operator panel must be switched to the DRIVE position for this function to work.

Drill-Frame Tilt Lever

Use the drill-frame tilt lever to tilt the drill frame to place the stake-down plate on the ground or to return the frame to the TRAVEL position.

Note: The DRIVE/DRILL switch on the operator panel must be switched to the DRIVE position for this function to work.

Drive Pendant

Refer to Figure 17 for the location of the drive pendant.

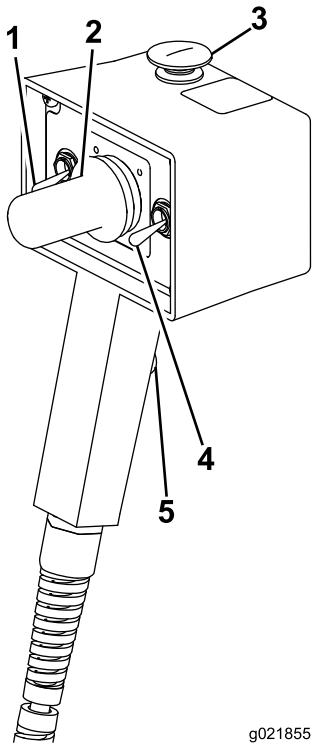

Figure 20

1. Engine-speed switch
2. Drive-direction joystick
3. Engine-stop button
4. Drive-speed switch
5. Operator-presence switch

Engine-Stop Button

Press this button to immediately stop the engine and all movement/drilling operations. You must pull this button out before you can start the engine again.

Engine-Speed Switch

- Press and hold the top of this switch to increase the engine speed.
- Press and hold the bottom of this switch to decrease the engine speed.
- Release the switch to maintain the current engine speed.

Drive-Direction Joystick

Use the joystick to control the direction of the machine. The machine will travel in the direction that you move the joystick.

Drive-Speed Switch

The switch sets the speed at which the machine will travel. Move the switch up for high speed or down for low speed.

Operator-Presence Switch

Press and hold this button to enable the other controls on the drive pendant. The machine will stop moving if you release this button.

Drill Pendant

⚠ WARNING

Only an authorized person(s) should operate the drill pendant. Personal injury, harm to others, or damage to the machine could occur if this pendant is misused.

The drill pendant (also referred to as the life-jacket pendant) is designed to allow you rudimentary control over the drilling features when connected to the front receptacle, should the operator platform controls become non-responsive. You can also plug this pendant into the drive-pendant receptacle at the rear control panel, in the event that the drive pendant malfunctions to obtain basic movement functions at slow speed.

Refer to Figure 17 for the location of the drill pendant.

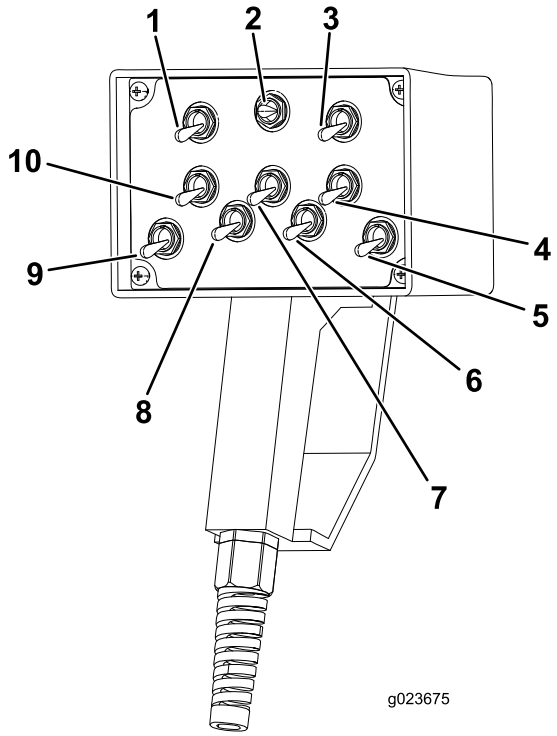

Figure 21

1. Left-track-control switch/rotary-control switch
2. Drilling fluid and wrench-control switch
3. Right-track-control switch/carriage-control switch
4. Breakout-wrench-control switch (upper wrench)
5. Drill-spindle-control switch
6. Pipe-grip-control switch
7. Pipe-clamp-control switch
8. Cam-rotation-control switch
9. Pipe-elevator-control switch
10. Stationary (for lower wrench) pipe-clamp-control switch

Left-Track-Control Switch/Rotary-Control Switch

When this switch is connected to the drive-pendant receptacle, move it to control the movement of the left track.

- Move the switch forward to move the left track forward.
- Move the switch backward to move the left track backward.

When this switch is connected to the front drill-pendant receptacle, move it to control the rotation of the pipe.

- Move the switch forward to rotate the pipe clockwise.
- Move the switch backward to rotate the pipe counterclockwise.

Drilling Fluid and Wrench-Control Switch

When this switch is connected to the front drill-pendant receptacle, move it to control the drilling-fluid flow or the wrench operation.

- Move the switch to the left to turn the drilling fluid to the ON position.
- Move the switch to the right to turn wrench operation to the ON position.

Right-Track-Control Switch/Carriage-Control Switch

When this switch is connected to the drive-pendant receptacle, move it to control the movement of the right track.

- Move the switch forward to move the right track forward.
- Move the switch backward to move the right track backward.

When this switch is connected to the front drill-pendant receptacle, move it to control the movement of the carriage.

- Move the switch forward to move the carriage forward.
- Move the switch backward to move the carriage backward.

Breakout-Wrench-Control Switch

When this switch is connected to the front drill-pendant receptacle, move it to control the wrench breakout and makeup.

- Move the switch forward for wrench breakout (for upper wrench).
- Move the switch backward for wrench makeup (for upper wrench).

Drill-Spindle-Control Switch

When this switch is connected to the front drill-pendant receptacle, move it to control the movement of the drill spindle.

- Move the switch forward to rotate the drill spindle backward toward the pipe holder.
- Move the switch backward to rotate the drill spindle forward toward the operator.

Pipe-Grip-Control Switch

When this switch is connected to the front drill-pendant receptacle, move it to control the pipe grip.

- Move the switch forward to tighten the grip on the pipe.
- Move the switch backward to loosen the grip on the pipe.

Pipe-Clamp-Control Switch

When this switch is connected to the front drill-pendant receptacle, move it to control the pipe clamp.

- Move the switch forward to tighten the clamp on the pipe.
- Move the switch backward to loosen the clamp on the pipe.

Cam-Rotation-Control Switch

When this switch is connected to the front drill-pendant receptacle, move it to control the movement of the cam.

- Move the switch forward to rotate the cam backward toward the pipe holder.
- Move the switch backward to rotate the cam forward toward the operator.

Pipe-Elevator-Control Switch

When this switch is connected to the front drill-pendant receptacle, move it to control the pipe elevator.

- Move the switch forward to raise the pipe elevator.
- Move the switch backward to lower the pipe elevator.

Stationary Pipe-Clamp-Control Switch

When this switch is connected to the front drill-pendant receptacle, move it to control the stationary-pipe clamp.

- Move this switch forward to tighten the stationary-pipe clamp (for lower wrench).
- Move this switch backward to loosen the stationary-pipe clamp (for lower wrench).

Stake-Down Levers

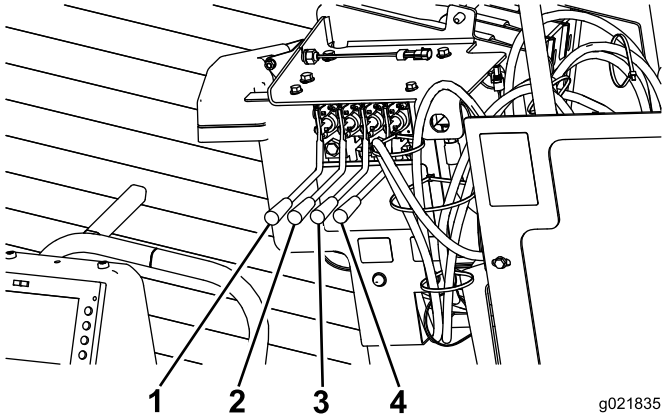

Figure 22

1. Left-stake-raise/lower lever
2. Left-stake-spin lever
3. Right-stake-raise/lower lever
4. Right-stake-spin lever

Stake-Raise/Lower Levers

Push down on these levers to lower the stakes into the ground. Pull up on these levers to raise the stakes out of the ground.

Note: The DRIVE/DRILL switch on the operator panel must be switched to the DRIVE position for this function to work.

Stake-Spin Levers

Push down on these levers to spin the stakes clockwise. Pull up on these levers to spin the stakes counterclockwise.

Note: The DRIVE/DRILL switch on the operator panel must be switched to the DRIVE position for this function to work.

Battery-Disconnect Switch

Open the rear compartment to access the BATTERY-DISCONNECT switch.

Turn the BATTERY-DISCONNECT switch to the ON or OFF position to perform the following:

- To energize the machine electrically, rotate the BATTERY-DISCONNECT switch clockwise to the ON position (Figure 23).
- To de-energize the machine electrically, rotate the BATTERY-DISCONNECT switch counterclockwise to the OFF position (Figure 23).

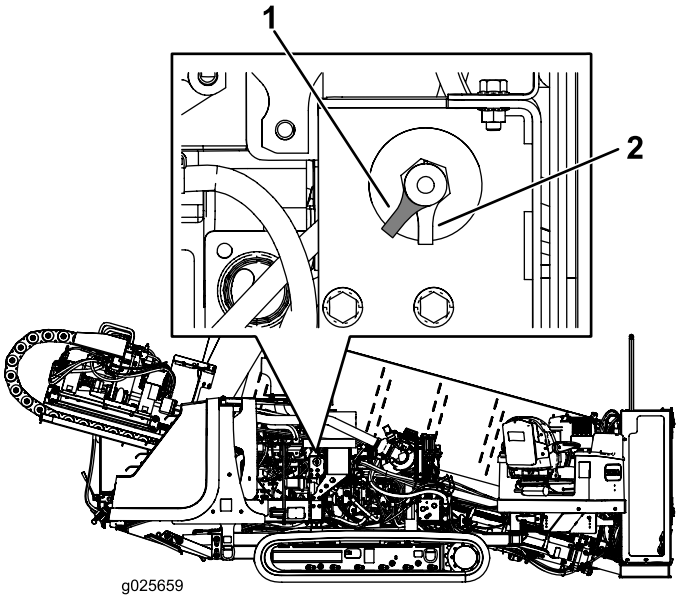

Figure 23

1. Battery-disconnect switch (On position)
2. Battery-disconnect switch (Off position)

Specifications

Note: Specifications and design are subject to change without notice.

Machine

Width	2.2 m (7.2 ft)
Length	6 m (19.7 ft)
Height	2.5 m (8.2 ft)
Weight	9,806 kg (21,620 lbs)

Operation

Note: Determine the left and right sides of the machine from the normal operating position.

Understanding Horizontal Directional Drilling

Horizontal directional drilling is a process used for drilling a horizontal bore through the soil and under obstructions such as roads, buildings, bodies of water, etc. Once you drill the bore, you pull back the utility lines or pipes through the bore and connect them as needed. Because it does not greatly disturb the surface, installing utilities using directional drilling preserves the environment and saves both time and money over traditional installation methods such as trenching.

Installing cabling or pipe using a directional drill involves the following steps:

1. **Gather site information.**

   Before operating in an area with high-voltage lines or cables, contact a One-Call System Directory service. In the USA, call 811 or your local utility company. If you do not know your local utility company's phone number, call the national number (USA and Canada only) at 1-888-258-0808. Also, contact any utility companies that are not participants of the One-Call System Directory service. Please refer to Drilling Near Utility Lines (page 6) for more information.

   Before fully planning the bore, gather information about the job site, such as the location of other utilities, obstacles at the site, and the permits you will need to complete the job; refer to Gathering Site Information (page 36).

2. **Plan the bore.**

   Before you drill, plan the bore path based on the information that you gathered; refer to Planning the Bore Path (page 38).

3. **Prepare the job site and the machine.**

   Before drilling, prepare the job site with an entry point, a depth-gauge hole (optional), and an exit hole. You also need to drive the unit to the site, set it up for drilling, and connect it to a drilling-fluid mixer.

   Note: When drilling, you connect the machine to a drilling-fluid mixer that mixes water with bentonite clay and other ingredients. The machine pumps this mixture, referred to as drilling fluid or "mud", through the drill pipe and out the drill bit. The drilling fluid lubricates the bit, helps to hold the bore open while drilling, and mixes with the spoils, flushing them out of the bore through the entry point.

   Refer to Preparing the Job Site and the Machine (page 43) for instructions on preparing the job site and the machine.

4. **Drill the bore.**

   You drill the bore in 3 stages:

   A. Entry

      In the entry phase of the bore, you push the drill bit and head into the ground at an angle of up to 16 degrees. After pushing in one or more pipes, you begin drilling down and forward until you reach the desired depth or depth-gauge hole (if used).

   B. Horizontal Reach

      After reaching the desired depth, you push the bit forward, steering the bit to a horizontal depth. The drill bit emits a radio signal from the sonde housing, which allows a crew member on the surface to track the location and depth of the head using the sonde receiver as you drill and steer it along a planned route.

   C. Exit

      Once you have attained the planned horizontal reach, you steer the head up at an angle similar to your entry angle bringing the bit into the exit hole or trench.

   Refer to Drilling the Bore (page 51).

5. **Backream the bore and pull back cabling or pipe.**

   After entering the exit hole, the end crew detaches the drill bit and sonde housing from the drill pipe. In its place, they attach a reaming bit and the end of the cable or pipe to be pulled through the bore. The reaming bit is designed to enlarge the bore as you pull it back. As before, you pump drilling fluid through the pipe to the reaming bit as you pull the cable or pipe back through the bore to lubricate the reamer and allow the cable or pipe to slide easily through the bore. You continue pulling the pipe back until the reamer reaches the depth-gauge hole or exits at the entry point. There you remove the reamer and product from the drill pipe, pulling the pipe the rest of the way back to the machine.

   Refer to Backreaming and Pullback (page 56) for instructions on backreaming and pulling cable or pipe.

6. **Finish the bore and leave the job site.**

   After completing the operation, you need to disconnect and clean the machine and load it on the trailer; refer to Cleaning with the Spray-Hose Attachment (page 98).

Gathering Site Information

Planning the Initial Route

Before you can begin boring, you need to plan the route that you will bore and prepare as follows:

- Create a basic plan for the bore, mapping out the proposed route.
  - Note any obstacles which may affect the bore, such as large trees, bodies of water, buildings, etc.
  - Plan the route of the bore to avoid as many obstacles as possible.
  - Determine the depth of any bodies of water to be crossed to ensure that you can get deep enough under them.
- Determine the depth that you need to install the material at and the minimum bend radius both of the drill pipe and of the material being installed. This will seriously affect how long the bore needs to be and at what angle that you can begin and end; refer to Planning the Bore Path (page 38).
- Have the area of the bore marked for utility lines (in the US call 811). Ensure that all lines are marked on your blueprints/bore plan as well.
- Contact the local authorities to arrange for any permits and traffic control that you will need to conduct the job.

Inspecting the Proposed Job Site

Physically inspect the site as follows:

- Note the terrain, slopes, valleys, hills, and any features not planned for previously.

  Determine the degree of slope at both the proposed entry point and exit point.
- Determine what the soil types are in the area and, if possible, at the depth that you will be boring. You may need to dig test holes at intervals along the bore path to fully determine this.
- Walk the area of the bore, looking for any possible unmarked obstructions. Look for manholes, pedestals, old foundations, etc.
- Identify all the hazards that you will pass within 3 m (10 ft).

⚠ DANGER

Contacting underground hazards with the machine while drilling or reaming can cause explosion, electrocution, breathing problems, severe trauma, and death to you or bystanders.

- **Ensure that all personnel at the job site wear personal protective equipment including a hard hat, eye protection, electrically insulated safety boots and gloves, and hearing protection.**
- **Keep bystanders and spectators away from the job site, including the complete bore path.**
- **Locate and expose all electric and gas lines that you will be crossing by careful hand digging.**
- **Ensure that you use the Zap-Alert system whenever you operate the machine.**

Common hazards include the following:

- **Gas lines**

⚠ DANGER

Drilling into a gas line can cause an explosion or fire, burning, injuring, or killing you or others in the vicinity of the break.

- ◊ **Do not smoke or have any source of flame near gas lines or at either end of a bore that will be crossing a gas line.**
- ◊ **Keep bystanders and spectators away from the job site, including the complete bore path.**
- ◊ **Locate and expose all gas lines that you will be crossing by careful hand digging.**
- ◊ **Have the gas company turn off the gas to any lines you will be crossing before drilling.**
- ◊ **Use the receiver to track the exact position of the drill head when approaching gas lines.**

– **Electrical power lines**

⚠ DANGER

Drilling into an electric power line will cause the machine to become electrified and may electrocute you or any bystanders.

- ◊ **Keep bystanders and spectators away from the job site, including the complete bore path.**
- ◊ **Locate and expose all electric lines that you will be crossing by careful hand digging.**
- ◊ **Have the electric company turn off the power to any lines you will be crossing before drilling.**
- ◊ **Use the receiver to track the exact position of the drill head when approaching electric lines.**
- ◊ **Before drilling, setup and use the Zap-alert system which is designed to notify in the case of an electric strike and electrically isolate the machine operator from the machine. If the Zap-alert alarm triggers, stop what you are doing and do not leave the operator's position. Refer to Deploying the Zap-Alert System (page 49) for detailed instructions on using the Zap-alert system.**

– **Crystalline silica and other dust**

If you will be drilling through or cutting concrete, sand, or other substances that create dusts or fumes, you need to ensure that you and all workers wear breathing protection to protect your lungs from the dust.

⚠ WARNING

Machining or handling stone, masonry, concrete, metal, and other materials can generate dust, mists, and fumes containing chemicals, such as silica, known to cause serious or fatal injury or illness, such as respiratory disease, silicosis, cancer, birth defects, or other reproductive harm.

- ◊ **Control dust, mist, and fumes at the source where possible. Water should be used for dust suppression when feasible.**
- ◊ **Use good work practices and follow the recommendations of the manufacturer or suppliers, OSHA, and other occupational and trade associations.**
- ◊ **When the hazards from inhalation cannot be eliminated, the operator and any bystanders should wear a respirator approved by OSHA for the material being handled.**

⚠ WARNING

Silicosis Warning: **Grinding, cutting, or drilling stone, masonry, concrete, metal, and other materials with silica in their composition may give off dust or mist containing crystalline silica. Silica is a basic component of sand, quartz, brick, clay, granite, and numerous other minerals and rocks. Repeated and/or substantial inhalation of airborne crystalline silica can cause fatal respiratory diseases, including silicosis. In addition, some other authorities have listed respirable crystalline silica as a substance known to cause cancer. When cutting such materials, follow respiratory precautions.**

Planning the Bore Path

Before setting up the job site, you need to plan the bore path, including the following:

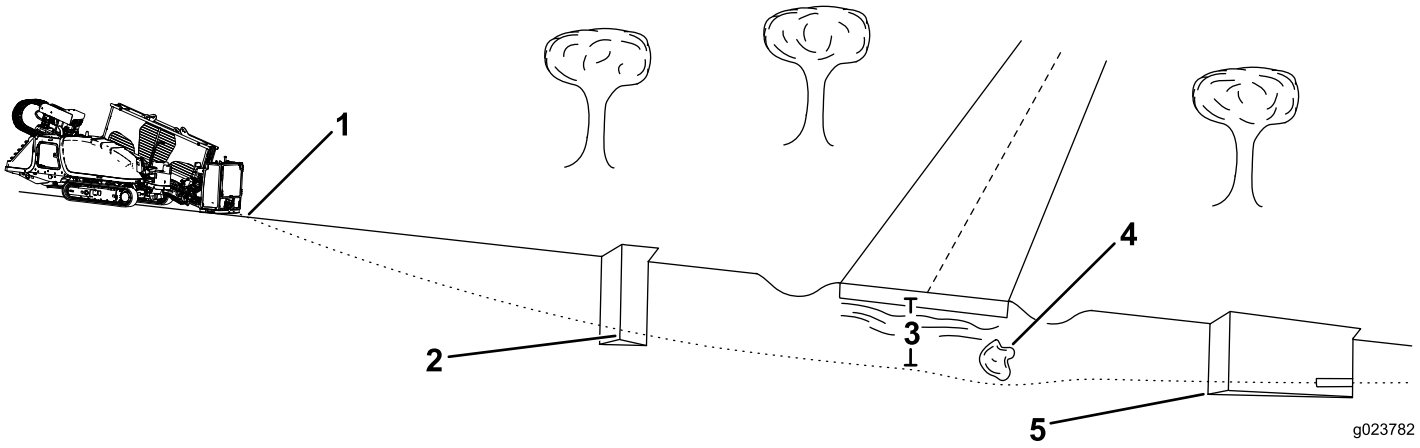

Figure 24

1. Bore entry
2. Beginning-of-bore-at-depth point
3. Bore depth
4. Obstacle
5. End-of-bore-at-depth point and bore exit

- Bore entry

  This is where you setup the machine and the drill bit enters the ground. Depending on conditions, this will typically be set back 9 to 15 m (30 to 50 ft) from the beginning-of-the-bore-at-depth point.

- Beginning-of-bore-at-depth point

  This is the point where you want the utility line or pipe to end after installation is complete. It is typically the point at which the bore levels out and begins to bore horizontally. This may be the same as the entry point, or you may dig a separate depth-gauge hole at this point (Figure 24).

- Bore depth

  This the depth at which you want to install the utility line or pipe. This machine is designed primarily for installations between 1 and 3 m (3.5 to 10 ft).

- Obstacles in the path

  It is important to know where the known obstacles are that you will need to steer around or under before starting so that you can plan where to begin steering prior to reaching the obstacle.

- End-of-bore-at-depth point

  This is the point where you want the utility line or pipe to begin after installation is complete. Often, this will also be the bore exit.

- Bore exit

  This is the location where the drill head will exit the ground and the point at which you will pull the utility lines or pipe into the bore. If this point will be at the surface instead of at installation depth, you will need to determine the distance from the end-of-bore-at-depth location needed for steering the drill to the surface, typically 9 to 15 m (30 to 50 ft) from the end-of-the-bore-at-depth point.

Determining the Bore-Entry Point

One of the more challenging aspects of planning the bore path is to determine the entry point of the bore. You need to take the following traits into account when determining the location of the entry point:

- **Bore depth**

  This is the depth at which you want to install the utility line or pipe. This machine is designed primarily for installations between 1 and 3 m (3.5 to 10 ft).

- **Pipe and material flexibility**

  The 3 m (10 ft) pipes used on this machine can flex to an 8% pitch over the length of the pipe; this equates to a bend of no more than 20 cm (8 inches) off a straight path (Figure 25).

  Important: If you steer the pipe to bend sharper than 20 cm (8 inches) per pipe, you may damage the pipes and their connections. You must also make steering changes gradually over the entire length of each pipe. If you steer the whole 20 cm (8 inches) in only 25 to 50 cm (1 to 2 ft) of travel, you will permanently damage the pipes.

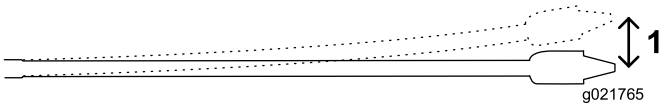

Figure 25

1. 20 cm (8 inches)

This flexibility is often rated in materials as a minimum bend radius, which is the radius of the circle formed if the material or pipes, connected together, were bent to form a giant circle. The minimum radius of a circle made with the pipe used with this machine is 33 m (108.2 ft).

- **Entry pitch**

  The entry pitch is the angle at which the machine enters the ground. With the tracks on level ground, the stabilizers down, and the stake-down plate on the ground, the drill frame angle is about 15 degrees or a 27% pitch. This pitch will change depending on the slope of the ground and other factors of the job site. You can also reduce this pitch a bit by building up the ground under the stake-down plate before positioning the machine. You can determine the actual pitch of the drill frame by placing the drill bit and sonde housing on the frame and then use the receiver to display the pitch.

  The steeper the entry pitch is, the deeper the bore will have to be due to the limitations of the pipe flexibility. Typically you need to insert the drill and at least 1/3 of a pipe into the ground before you can start steering toward the beginning of the bore point. Figure 26, Figure 27, and the following table illustrate the relationship between entry pitch and depth.

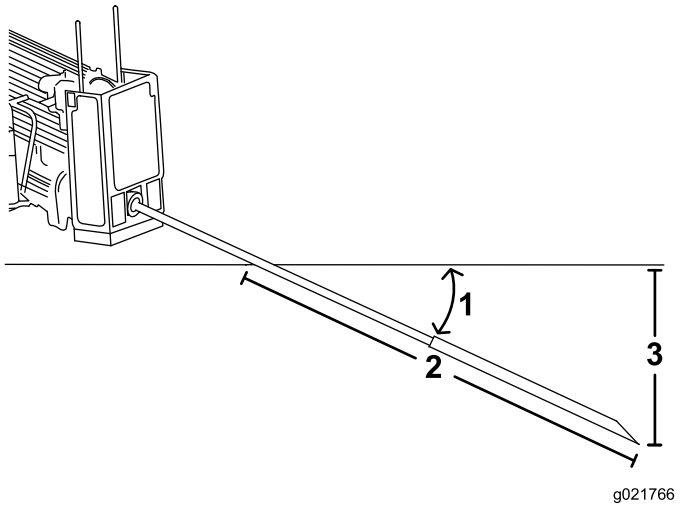

Figure 26

1. 26% pitch
2. 3 m (10 ft)
3. 76 cm (30 inches)

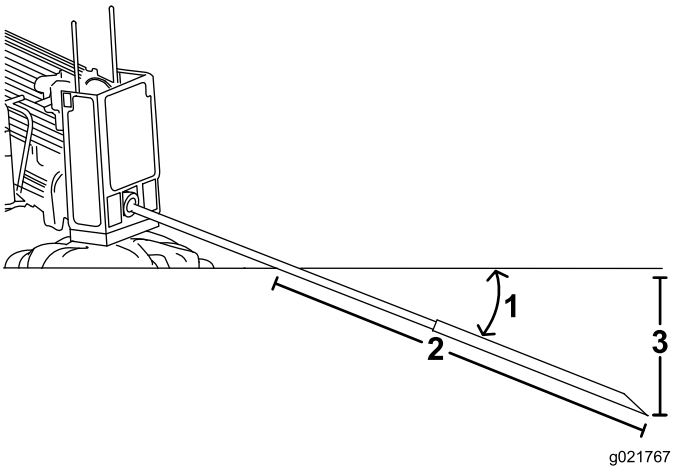

Figure 27

1. 18% pitch
2. 3 m (10 ft)
3. 53 cm (21 inches)

Note: The depths given in the following table are for 3 m (10 ft) of combined drill head and pipe. As you steer up, the pitch of the steered section will change and can be monitored with the receiver. Use the following table to identify how many lengths of pipe will be necessary to insert and steer to the beginning point and help you choose an entry point.

Pitch	Depth Change per 10 feet	Pitch	Depth Change per 10 feet
1%	2 cm (1 inch)	26%	76 cm (30 inches)
2%	5 cm (2 inches)	27%	79 cm (31 inches)
3%	10 cm (4 inches)	28%	81 cm (32 inches)
4%	13 cm (5 inches)	29%	84 cm (33 inches)
5%	15 cm (6 inches)	30%	86 cm (34 inches)
6%	18 cm (7 inches)	31%	91 cm (36 inches)
7%	20 cm (8 inches)	32%	94 cm (37 inches)
8%	25 cm (10 inches)	33%	97 cm (38 inches)
9%	28 cm (11 inches)	34%	99 cm (39 inches)
10%	30 cm (12 inches)	35%	102 cm (40 inches)
11%	33 cm (13 inches)	36%	104 cm (41 inches)
12%	36 cm (14 inches)	37%	107 cm (42 inches)
13%	39 cm (15 inches)	38%	109 cm (43 inches)
14%	43 cm (17 inches)	39%	112 cm (44 inches)
15%	46 cm (18 inches)	40%	114 cm (45 inches)
16%	48 cm (19 inches)	41%	117 cm (46 inches)
17%	51 cm (20 inches)	42%	117 cm (46 inches)
18%	53 cm (21 inches)	43%	119 cm (47 inches)
19%	56 cm (22 inches)	44%	122 cm (48 inches)
20%	61 cm (24 inches)	45%	124 cm (49 inches)
21%	64 cm (25 inches)	46%	127 cm (50 inches)
22%	66 cm (26 inches)	47%	130 cm (51 inches)
23%	69 cm (27 inches)	48%	133 cm (52 inches)
24%	71 cm (28 inches)	49%	135 cm (53 inches)
25%	74 cm (29 inches)	50%	137 cm (54 inches)

All measurements are approximate and will vary depending on soil conditions.

Note: These values and more can be found in the *Driller's Handbook & Daily Log* by Digital Control Incorporated.

Given the above information, you can calculate the number of rods required to reach your beginning point at the appropriate depth. Toro recommends that you start the entry point the same distance back from your beginning-at-depth point as the length of pipes you will need to reach that point. This will ensure that you have enough extra space so you will not need to over-steer and damage the pipes.

The following example illustrates the process given an installation using the maximum entry pitch of the machine (26%) on level ground:

- Insert the first 3 m (10 ft) of drill bit/pipe into the ground with no steering. The end of the drill bit will be 76 cm (30 inches) deep (Figure 25).

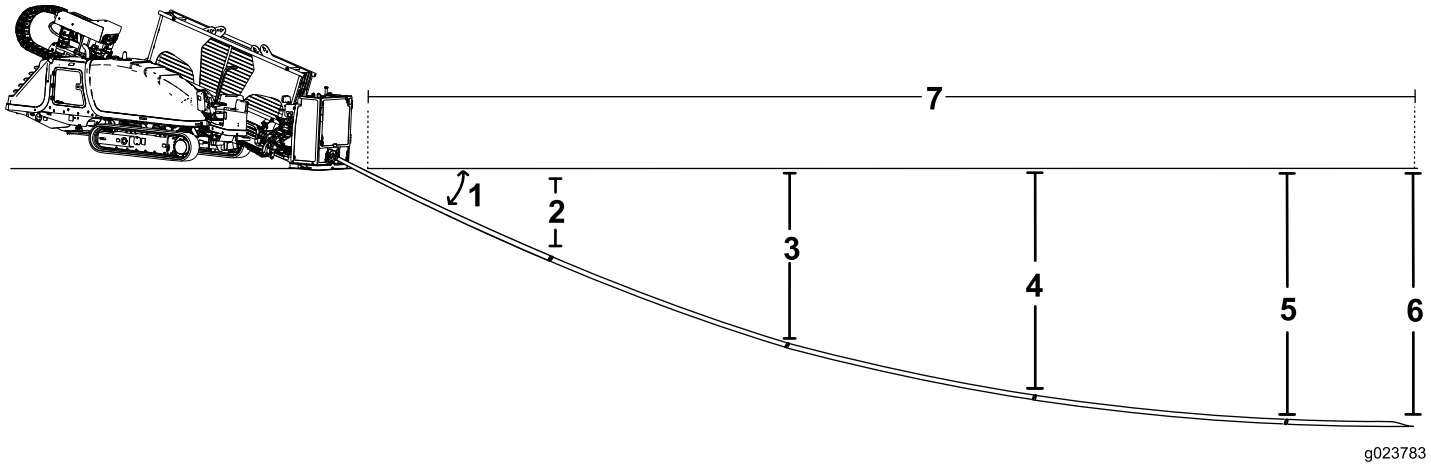

Figure 28

1. 26% pitch
2. 76 cm (30 inches)
3. 142 cm (56 inches)
4. 185 cm (73 inches)
5. 203 cm (80 inches)
6. 208 cm (82 inches)
7. 14.7 m (45 ft)

- Begin steering up for the next 3 m (10 ft), pushing the pipes in at the maximum pitch change of 8%. This results in a change of pitch from 26% at the beginning of the 3 m (10 ft) to 18% at the end of the 3 m (10 ft) for an average pitch of 22%. Given that, the drill head lowers another 66 cm (26 inches) and is now 142 cm (56 inches) deep.
- Continuing steering up for the next 3 m (10 ft) at an 8% pitch change, your pitch will change from 18% to 10% for an average pitch of 14%. Given that, the drill head lowers another 43 cm (17 inches) and is now 185 cm (73 inches) deep.
- Continuing steering up for the next 3 m (10 ft) at an 8% pitch change, your pitch will change from 10% to 2% for an average pitch of 6%. Given that, the drill head lowers another 18 cm (7 inches) and is now 203 cm (80 inches) deep.
- Leveling the drill head from 2% to 0% takes less than 1.5 m (5 ft) more for a final depth of 208 cm (82 inches). Reaching this final point took 4-1/2 pipes 3 m (10 ft) long. So for this example, your entry point should be 14.7 m (45 ft) back from the beginning-at-depth point of your installation.

The following example illustrates the process given an installation using the machine at an 18% pitch on level ground:

- Insert the first 3 m (10 ft) of drill bit/pipe into the ground with no steering. The end of the drill bit will be 53 cm (21 inches) deep (Figure 29).

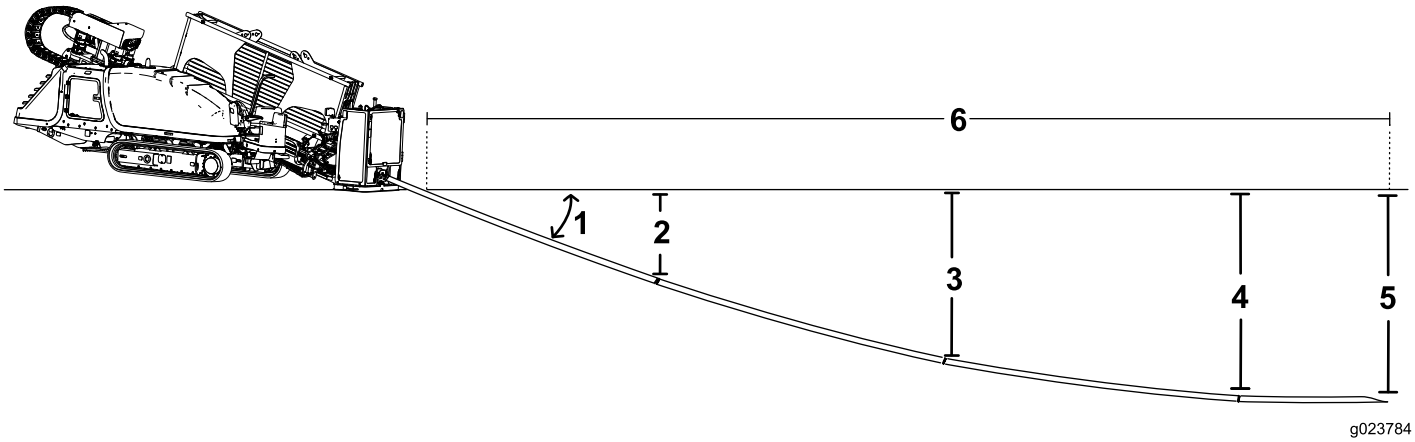

Figure 29

1. 18% pitch
2. 53 cm (21 inches)
3. 96 cm (38 inches)
4. 114 cm (45 inches)
5. 119 cm (47 inches)
6. 10.6 m (35 ft)

- Begin steering up for the next 3 m (10 ft), pushing the pipes in at the maximum pitch change of 8%. This results in a change of pitch from 18% at the beginning of the 3 m (10 ft) to 10% at the end of the 3 m (10 ft) for an average pitch of 14%. Given that, the drill head lowers another 43 cm (17 inches) and is now 96 cm (38 inches) deep.
- Continuing steering up for the next 3 m (10 ft) at an 8% pitch change, your pitch will change from 10% to 2% for an average pitch of 6%. Given that, the drill head lowers another 18 cm (7 inches) and is now 114 cm (45 inches) deep.
- Leveling the drill head from 2% to 0% takes less than 1.5 m (5 ft) more for a final depth of 119 cm (47 inches). Reaching this final point took 3-1/2 pipes 3 m (10 ft) long. So for this example your entry point should be 10.6 m (35 ft) back from the beginning-at-depth point of your installation.

Important: You can use the information contained in this section to determine both the space needed to steer up to the exit point if needed and also to steer around obstacles.

Mapping the Bore

With the information you gathered previously, map out the route of the bore, identifying the following so that you can mark the site later:

- Entry point
- Location of the machine and supporting equipment
- Beginning of bore at depth
- Any obstacles that you need to steer around and the locations where you need to start steering to get around or under them
- Any utility lines that you will need to cross
- Slope and soil changes along the path that will affect the bore
- End of the bore at depth
- Exit location if different than the end of the bore

Preparing the Job Site and the Machine

Before drilling, prepare the job site and the machine as follows:

- Mark and prepare the bore path Marking and Preparing the Bore Path (page 43).
- Test the Zap-Alert system; refer to Testing the Zap-Alert System (page 43).
- Load the drill pipes into the pipe holder if needed; refer to Loading Drill Pipes into the Pipe Holder (page 45).
- Add fuel to the machine; refer to Adding Fuel (page 45).
- Check the oil level in the engine; refer to Checking the Engine-Oil Level (page 72).
- Check the engine coolant level; refer to Checking the Coolant Level in the Radiator (page 85).
- Check the hydraulic oil level; refer to Checking the Hydraulic Fluid (page 90).
- Check the oil level in the drilling-fluid pump; refer to Checking the Drilling-Fluid-Pump Oil Level (page 94).
- Load/unload the machine; refer to Loading and Unloading the Machine (page 47).
- Drive the machine to the entry point; refer to Understanding Horizontal Directional Drilling (page 35).
- Connect the machine to a drilling-fluid source; refer to Connecting to a Drilling-Fluid Source (page 50).
- Setup the drill bit(s) and tracking electronics; refer to Setting up the Drill Head and the Tracking System (page 53).
- Setup the machine for drilling; refer to Setting up the Machine for Drilling (page 48).
- Deploy the Zap-Alert system; refer to Deploying the Zap-Alert System (page 49).

Marking and Preparing the Bore Path

1. Walk the bore path, marking it on the ground with marking paint so that the receiver operator will be able to follow the plan.
2. Hand dig to expose any buried utility lines marked previously that the bore path will be crossing. This will allow the receiver operator to know exactly where they are.
3. If you are exiting the bore at ground level and not in an existing trench, dig an angled hole into which the bit will enter at the end of the bore.
4. If desired, dig a hole to the beginning-of-the-bore point where you can disconnect the pipe or lines after pulling them back.

Testing the Zap-Alert System

The Zap-Alert system is an electric strike sensing device on the machine that triggers a strobe light and audible alarm in the event that the drill bit, reamer, or stake breaks into an energized power line. In the event of an electric strike, the machine will become energized, setting off the alarm.

⚠ DANGER

If the Zap-alert system activates while drilling, the machine, except for the operator platform, will become energized. If you step off the operator platform or if someone touches the machine or wet ground near the machine or in the bore, you or the one who touched the machine could be electrocuted, causing serious injury or death.

- **Test the Zap-alert system before drilling.**
- **Deploy the grounding stake before drilling. Ensure that the stake is fully inserted into moist soil.**
- **If the Zap-alert is triggered:**
  - **Stay in the seat and do not touch the ground or any other part of the machine until the power has been turned off. Do not pour liquids or urinate from the operator platform onto the ground.**
  - **Stop drilling, stop the drilling-fluid flow, and retract the drill out of the ground.**
  - **Keep everyone away from the machine.**
  - **Keep standing or running water and drilling fluid contained close to the machine. Keep water and drilling fluid sources away from the broken line.**
  - **Contact the utility company to have power shut off to the broken line. Do not reset the Zap-alert system until the power has been turned off.**

Test the Zap-alert system before using the drill each day, as follows:

1. Open the front hood.
2. Lay the grounding stake flat on the ground away from the machine. Do not drive the stake into the ground.

   Important: Do not allow the stake to touch any part of the machine.
3. Connect an alligator clip from the Zap-alert tester to the grounding stud on the Zap-alert system (Figure 30).

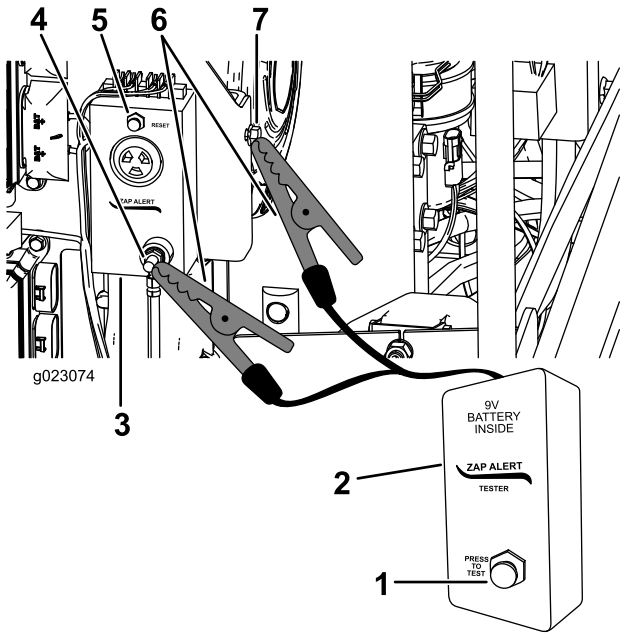

Figure 30

1. Test button
2. Zap-alert tester
3. Zap-alert system
4. Zap-alert system grounding stud
5. Reset button
6. Alligator clips
7. Machine grounding point

4. Connect the other alligator clip to a metal component of the machine frame.
5. Press the TEST button on the Zap-alert tester (Figure 30).

   The Zap-alert alarm should sound, and the strobe on top of the front hood should flash.
6. Press the ZAP-ALERT RESET button to stop the alarm (Figure 30).
7. Disconnect the alligator clips from the grounding stud and the machine.
8. Store the grounding stake in the holder on the operator platform as shown in Figure 31.

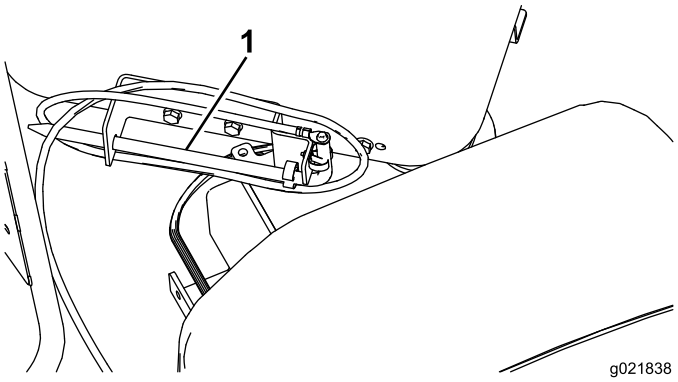

Figure 31

1. Grounding stake

If either the audible alarm or the strobe light fail to trigger when you pressed the TEST button, have them repaired before drilling with the machine.

Mounting a Fire Extinguisher

Mount your fire extinguisher below the operator seat (Figure 32).

Note: A fire extinguisher is not provided with the machine.

The recommended fire extinguisher is a dry chemical fire extinguisher approved for class B and C fires.

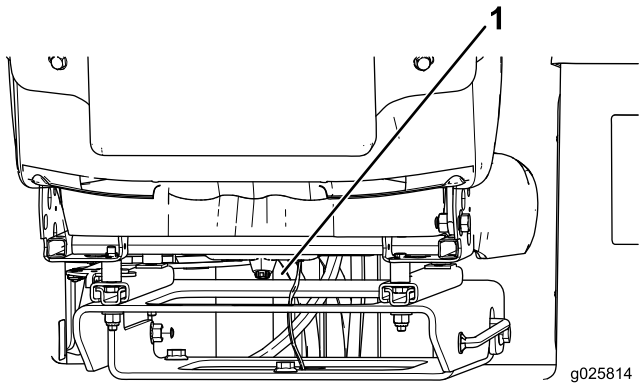

Figure 32

1. Mounting location

Loading Drill Pipes into the Pipe Holder

Before using the machine, fill the pipe holder with up to 40 drill pipes.

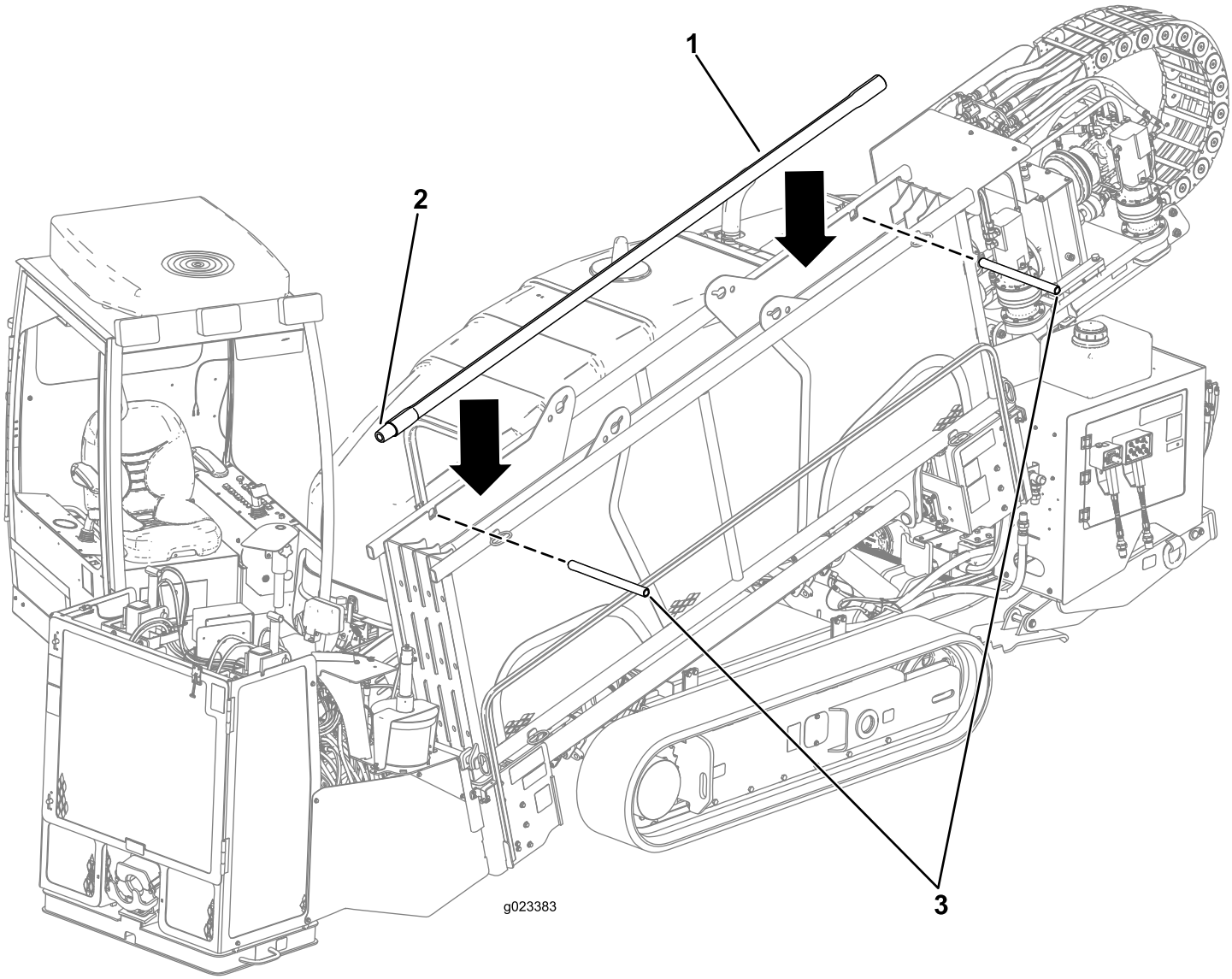

Figure 33

1. Pipe
2. Male end
3. Clevis pins

1. Remove the clevis pins from the pipe holder (Figure 33).
2. Insert the pipes from the top with the male threaded pipe ends toward the front of the machine (Figure 33).
3. Install the clevis pins before drilling.

Note: Before drilling, check the condition of the pipes and replace any that are bent or damaged.

Adding Fuel

Service Interval: Before each use or daily—Check the fuel level.

Use only clean, fresh diesel fuel or biodiesel fuels with ultra low (<15 ppm) sulfur content. The minimum cetane rating should be 40. Purchase fuel in quantities that can be used within 180 days to ensure fuel freshness.

Fuel tank capacity: 208 L (55 U.S. gallons)

Use summer grade diesel fuel (No. 2-D) at temperatures above -7° C (20° F) and winter grade (No. 1-D or No. 1-D/2-D blend) below that temperature. Using winter grade fuel at lower temperatures provides lower flash point and cold flow characteristics which will ease starting and reduce fuel filter plugging.

Using summer grade fuel above -7° C (20° F) will contribute toward longer fuel pump life and increased power compared to winter grade fuel.

Important: Do not use kerosene or gasoline instead of diesel fuel. Failure to observe this caution will damage the engine.

⚠ WARNING

Fuel is harmful or fatal if swallowed. Long-term exposure to vapors can cause serious injury and illness.

- **Avoid prolonged breathing of vapors.**
- **Keep face away from nozzle and gas tank or conditioner opening.**
- **Keep fuel away from eyes and skin.**

Using Biodiesel Fuel

This machine can also use a biodiesel blended fuel of up to B20 (20% biodiesel, 80% petrodiesel). The petrodiesel portion must be ultra low sulfur. Observe the following precautions:

- The biodiesel portion of the fuel must meet specification ASTM D6751 or EN14214.
- The blended fuel composition should meet ASTM D975 or EN590.
- Painted surfaces may be damaged by biodiesel blends.
- Use B5 (biodiesel content of 5%) or lesser blends in cold weather.
- Monitor seals, hoses, gaskets in contact with fuel as they may be degraded over time.
- Fuel filter plugging may be expected for a time after converting to biodiesel blended.
- Contact your dealer for more information about biodiesel.

In certain conditions during fueling, static electricity can be released, causing a spark which can ignite the fuel vapors. A fire or explosion from fuel can burn you and others and can damage property.

- Place fuel containers on the ground away from your vehicle before filling.
- Do not fill fuel containers inside a vehicle or on a truck or trailer bed because interior carpets or plastic truck bed liners may insulate the container and slow the loss of any static charge.
- When practical, remove equipment from the truck or trailer, and refuel the equipment with its tracks on the ground.
- If this is not possible, then refuel such equipment on a truck or trailer from a portable container rather than from a fuel dispenser nozzle.
- If you are using a fuel dispenser nozzle, keep the nozzle in contact with the rim of the fuel tank or container opening at all times until fueling is complete.

⚠ DANGER

In certain conditions, fuel is extremely flammable and highly explosive. A fire or explosion from fuel can burn you and others and can damage property.

- **Fill the fuel tank outdoors, in an open area, when the engine is cold. Wipe up any fuel that spills.**
- **Do not fill the fuel tank inside an enclosed trailer.**
- **Do not smoke when handling fuel, and stay away from an open flame or where fuel fumes may be ignited by a spark.**
- **Store fuel in an approved container and keep it out of the reach of children. Do not buy more than a 30-day supply of fuel.**
- **Do not operate without entire exhaust system in place and in proper working condition.**

1. Park the machine on a level surface.
2. Using a clean rag, clean the area around fuel-tank cap.
3. Remove the cap from the fuel tank (Figure 34).

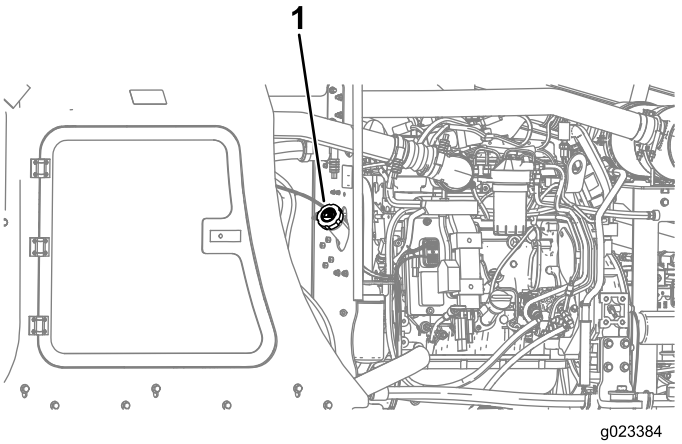

Figure 34

1. Fuel-tank cap

4. Fill the tank until the level is to the bottom of the filler neck with diesel fuel.
5. Install fuel tank cap tightly.

Note: If possible, fill the fuel tank after each use. This will minimize possible buildup of condensation inside the fuel tank.

Checking the Engine-Oil Level

Before you start the engine and use the machine, check the oil level in the engine crankcase; refer to Checking the Engine-Oil Level (page 72).

Checking the Cooling System

Before you start the engine and use the machine, check the cooling system; refer to Cooling System Maintenance (page 84).

Checking the Hydraulic-Fluid Level

Before you start the engine and use the machine, check the hydraulic-fluid level; refer to Checking the Hydraulic Fluid (page 90).

Starting and Stopping the Engine

To start the engine, complete the following:

1. Open the front hood; refer to Opening the Front Hood (page 65).
2. Turn the BATTERY-DISCONNECT switch to the ON position; refer to Battery-Disconnect Switch (page 34).
3. Close and latch the hood.
4. Open the door on the rear control panel.
5. Turn the ignition key to the RUN position.

   Note: If the Wait-to-Start light illuminates, wait until it turns off before proceeding.
6. Turn the ignition key to the START position until the engine starts, then release it.

To stop the engine, turn the ignition key to the OFF position. In an emergency, you can also stop the engine and all processes by pressing the ENGINE-STOP button on either the drive pendant or the control panel.

Driving the Machine

1. Start the machine, and ensure that the stake-down augers are removed from the ground.
2. Ensure that the rear stabilizers are retracted and that the thrust frame is raised off the ground in the horizontal position.
3. Walk around the machine to ensure that no one is near it.

   Note: Ensure that all bystanders are clear of the area where you will be moving the machine.
4. Connect the drive pendant to the right receptacle on the bottom of the rear control panel.
5. With the pendant in hand, walk at least 6 feet to the side of the machine.

   Note: Be sure to keep this safe distance whenever moving the machine.
6. Press and hold the OPERATOR PRESENCE button on the drive pendant.
7. Use the SPEED switch on the pendant to increase or decrease the engine speed as desired.
8. Set the desired travel speed using the SPEED switch.
9. Use the joystick to move the machine as desired.

Note: For more information on the drive pendant, refer to Drive Pendant (page 31).

Loading and Unloading the Machine

⚠ WARNING

Moving a machine of this size on a trailer over public roads carries risks to those around the machine if it should come loose, be involved in an accident, hit a low hanging structure, etc.

- **Follow the tie-down procedures described in this section when moving the machine.**
- **Follow all local traffic regulations governing the hauling of large equipment. This manual cannot adequately cover all laws and safety regulations; it is your responsibility to know and follow the laws and regulations that pertain to you.**

⚠ WARNING

The machine can slip and fall from a trailer or ramp, crushing anyone caught beneath it and causing serious injury or death.

- **Keep all bystanders away from the machine and trailer.**
- **Ensure that the trailer and ramp are not slippery and are free of ice, grease, oil, etc.**
- **Move the machine onto the ramp at slow speed with the engine at slow speed.**
- **Ensure that you have the machine centered on the ramp and trailer.**

1. Ensure that the ramp and the trailer or truck bed can support the weight of the machine.
2. Ensure that the upper front and rear pipe-holder pins and the lower front and rear pipe-holder pins are installed (Figure 35).

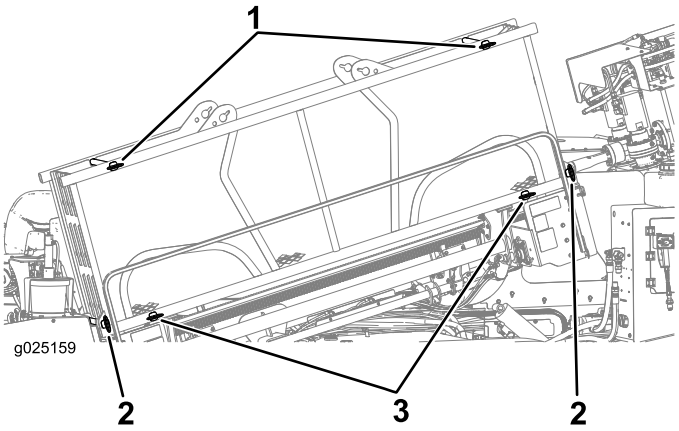

Figure 35

1. Upper pin
2. Lower, outer pin
3. Lower, inner pin

3. Ensure that the pins securing the pipe holder to the thrust frame are installed.
4. Place a block at the front and rear of the trailer and/or truck tires.
5. Using the drive pendant, set the engine speed to slow and the drive speed to slow.
6. Using the drive pendant, carefully drive the machine forward or rearward up the ramp and into position on the trailer.
7. Lower the stake-down plate to the deck of the trailer.
8. Turn off the engine.
9. Use appropriately rated chains and binders to secure the rings on the left and right track frames and the stake-down plate to the trailer (Figure 36).

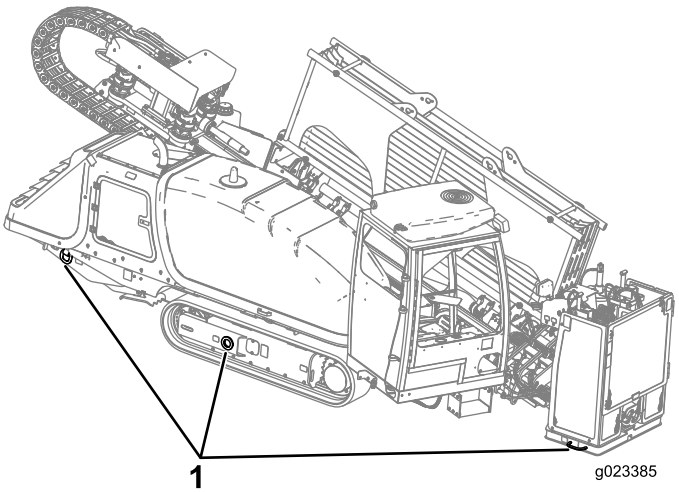

Figure 36

1. Tie-down points (only right side shown)

10. Measure and note the distance from the ground to the highest point on the machine to ensure that you do not collide with low hanging obstacles.
11. Remove the block from the trailer tires, and stow them with the machine for use when unloading it.
12. After driving a few miles, pull over and check to ensure that all chains are still tight and that the machine has not moved.

Note: To unload the machine, reverse the above procedure.

Setting up the Machine for Drilling

1. Using the drive pendant, drive the machine to the location that you have prepared for it, ensuring that the front of the machine is the proper distance back from entry point and the drill frame is in line with the bore path.
2. Drive up to the location and make sure that all utilities are located and marked prior to drilling.
3. Loosen the 4 screws that secure the covers over the operator consoles and remove the covers (Figure 37).

   Note: Store them someplace safe for the day.

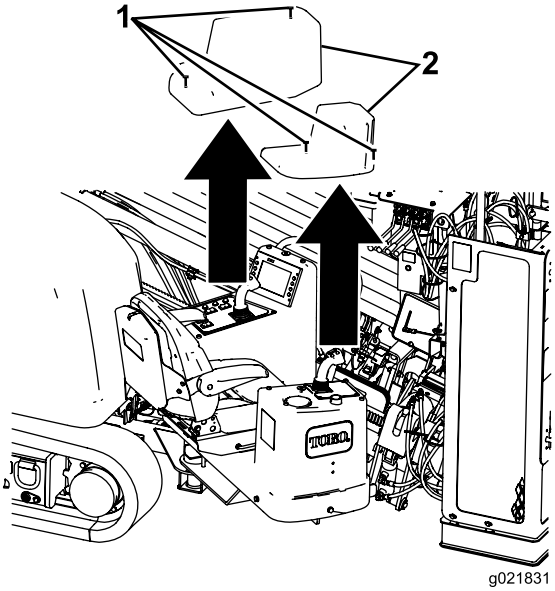

Figure 37

1. Screw
2. Cover

4. Lower the pedestrian safety bar and secure it in place (Figure 38).

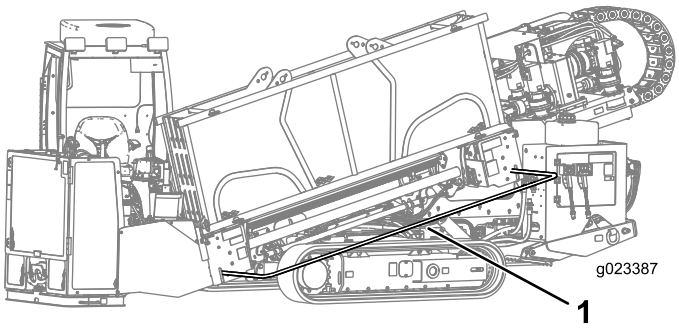

Figure 38

1. Pedestrian safety bar (lowered position shown)

5. Push down on the rear platform latch securing the operator platform, and swing it out to the desired position, ensuring that it locks in place (Figure 39).

   Note: The operator platform has 4 positions: travel (swung all the way into the machine), full-out, and 2 intermediate positions.

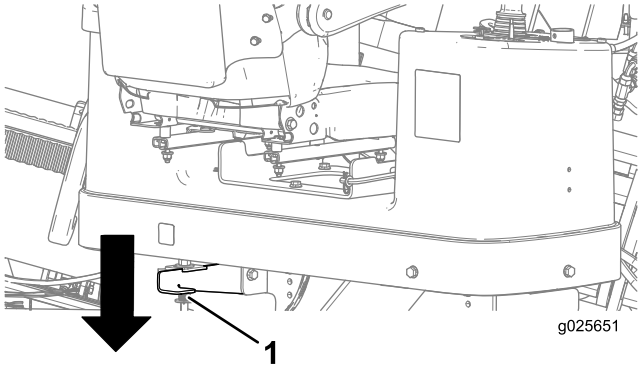

Figure 39

1. Rear platform latch

Deploying the Zap-Alert System

The Zap-alert system is an electric strike-sensing device on the machine that triggers a strobe light and an audible alarm whenever the drill bit, reamer, or stake breaks into an energized power line. In the event of an electric strike, the machine will become energized, setting off the alarm. The operator's platform is electrically isolated from the rest of the machine to protect you.

⚠ DANGER

If the Zap-alert system activates while drilling, the machine, except for the operator platform, will become energized. If you step off the operator platform or if someone touches the machine or wet ground near the machine or in the bore, you or the one who touched the machine could be electrocuted, causing serious injury or death.

- **Test the Zap-alert system before drilling.**
- **Deploy the grounding stake before drilling. Ensure that the stake is fully inserted into moist soil.**
- **If the Zap-alert is triggered:**
  - **Stay in the seat and do not touch the ground or any other part of the machine until the power has been turned off. Do not pour liquids or urinate from the operator platform onto the ground.**
  - **Stop drilling, stop the drilling-fluid flow, and retract the drill out of the ground.**
  - **Keep everyone away from the machine, wet ground near the machine or running from the machine, and any open sources of water/mud that is in the bore and contacting the broken line.**
  - **Contact the utility company to have the power shut off to the broken line. Do not reset the Zap-alert system until the power has been turned off.**

1. Remove the grounding stake from the holder on the side of the operator platform (Figure 40).

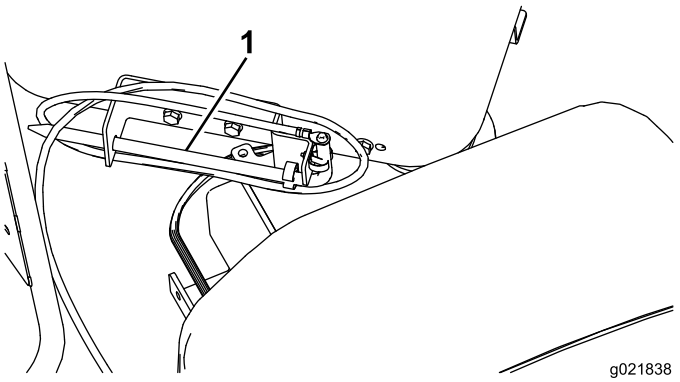

Figure 40

1. Grounding stake

2. Move the stake directly away from the machine, perpendicular to the drill frame, and drive it into the ground until the handle touches the ground.

3. If the ground is dry where you put the stake, soak the ground with water before using the machine to ensure good electrical contact.

Lowering the Stakes

1. Move the operator station to the desired angle, switch the DRILL/DRIVE switch to the DRILL position, and raise the pipe elevators, so that the pipe is resting on the elevators; refer to Starting the First Pipe (page 51).

   Note: Remove the front and rear pipe-holder pins if necessary (Figure 41).

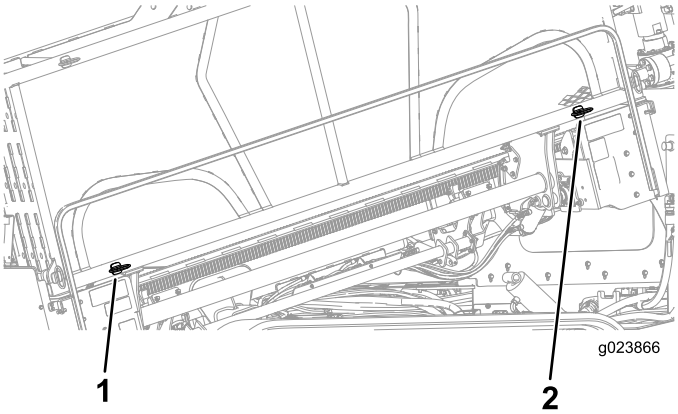

Figure 41

1. Front pin
2. Rear pin

2. Load the first pipe and install the sonde and the drill head; refer to Starting the First Pipe (page 51).
3. Place the drill head on the drill frame, and take a pitch reading using the receiver; refer to the *Tracking System Operator's Manual*.
4. Lower the thrust frame, tilting the drill frame until the plate contacts the ground (Figure 42).

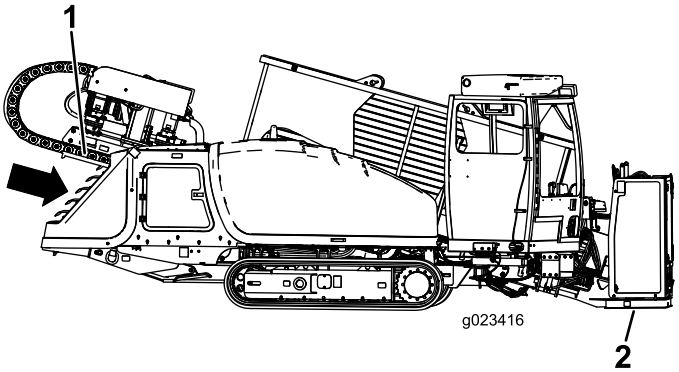

Figure 42

1. Thrust frame
2. Stake-down plate

5. Lower the rear stabilizers until they contact the ground firmly, or until the desired entry angle is achieved (Figure 43).

   Note: The rear of the tracks should just start to lift off the ground.

   Note: If the ground is soft, place timber below the stabilizers, and lower the stabilizers.

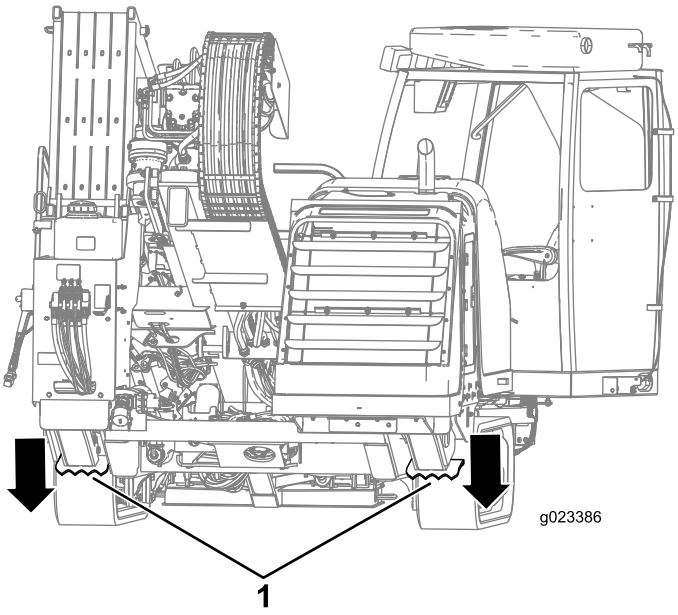

Figure 43

1. Rear stabilizers

6. Press the 2 right stake levers in to lower and spin the right stake auger until it seats fully (Figure 44).

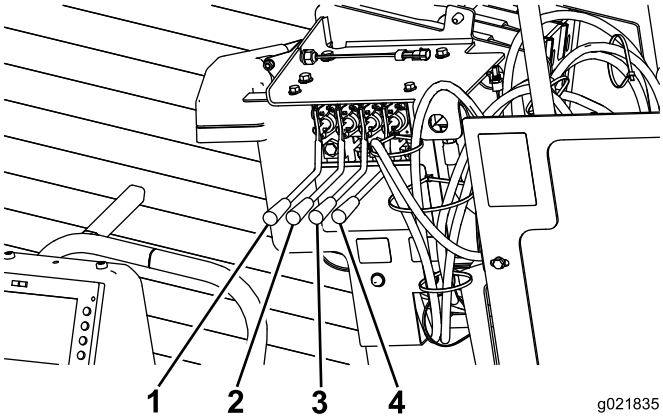

Figure 44

1. Left-stake-raise/lower lever
2. Left-stake-spin lever
3. Right-stake-raise/lower lever
4. Right-stake-spin lever

7. Repeat step 6 for the left-side stake.

Connecting to a Drilling-Fluid Source

When drilling and reaming, you pump a mixture of bentonite clay, water, and sometimes other ingredients, collectively called drilling fluid or "mud", through the pipe and into the bore. This drilling fluid, or "mud", does the following for your bore:

- Lubricates the drill head

- Loosens the soil into which the drill is cutting
- Penetrates and binds loose soil to keep it from collapsing on the bore pipe.

Important: Do not operate the drilling-fluid pump without a pressurized supply of drilling fluid, or damage to the pumping system will result.

The specific mixture you need will vary depending on your soil type and the operation that you are performing. Refer to your mixing system *Operator's Manual* for details.

Conversely, for some jobs (depending on the soil type and distance), you can pump screened water from a natural water source, such as a lake or river, through the drill instead of mixed drilling fluid.

- To connect the machine to a mixing system, refer to Setting up the Mixing System (page 51).
- To connect the machine to a natural water source, refer to Setting up the Pump to Use a Natural Water Source (page 51).

Setting up the Mixing System

Set up your mixing system near the directional drill location, preferably downwind, so that fumes from the mixing system engine will not bother you while you are drilling. Follow the instructions provided in the mixing system *Operator's Manual* for setting it up and using it.

Complete the steps following to connect the exit hose from the mixing system to the drilling-fluid pump on the machine:

1. Raise the cam-lock levers on the pump-inlet cap, and remove the cap (Figure 45).

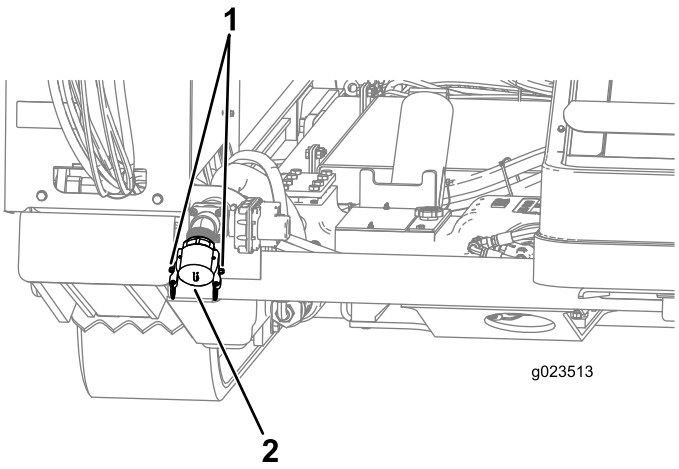

Figure 45

1. Cam-lock levers
2. Pump-inlet cap

2. Insert the hose from the mixing system over the pump inlet, and secure it with the cam-lock levers.

Setting up the Pump to Use a Natural Water Source

To set up a pump to use a natural water source, you must ensure that you use the Y-screen to filter all materials other than water.

1. Remove the pump-inlet cap (Figure 46).

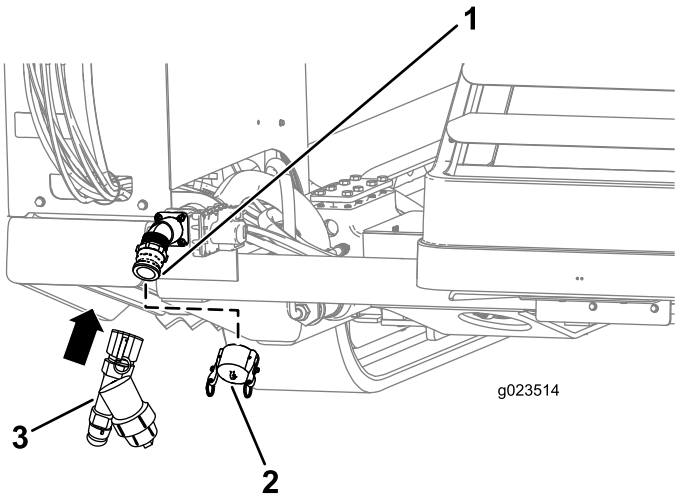

Figure 46

1. Pump threads
2. Pump-inlet cap
3. Y-screen

2. Align the Y-screen with the threads on the pump (Figure 46).
3. Rotate and tighten the Y-screen onto the pump.
4. Attach the hose to the Y-screen, and begin pumping from the natural water source.

Drilling the Bore

Starting the First Pipe

1. Ensure that all bystanders are away from the machine and that the exit-side lockout is ON.
2. Move the drive carriage fully down the drill frame and spray the spindle threads with thread joint compound, then return the drive carriage to the upper end of the frame (Figure 40).

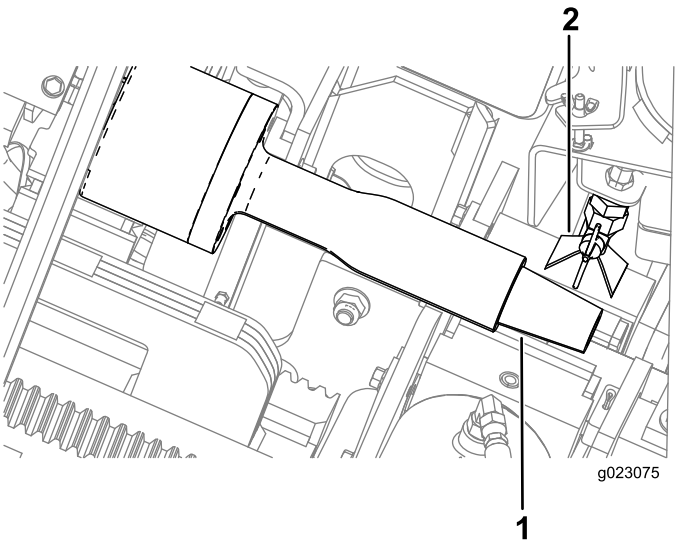

Figure 47

1. Drill spindle
2. TJC-applicator nozzle

3. Rotate the cam until the cam automatically stops at the first row of pipes in the pipe holder.
4. Lower the elevators to load a pipe into the cam.
5. Rotate the cam with the pipe facing toward the operator until the cam stops.
6. Rotate the pipe-gripper cam forward until the pipe is in the grippers.
7. Grip the pipe with the pipe grippers.
8. Continue to rotate the pipe-gripper cam toward the operator, until the pipe is aligned with the drill spindle.
9. Rotate the drill spindle clockwise, and move the carriage slowly forward to insert the spindle into the female end of the pipe (Figure 48).

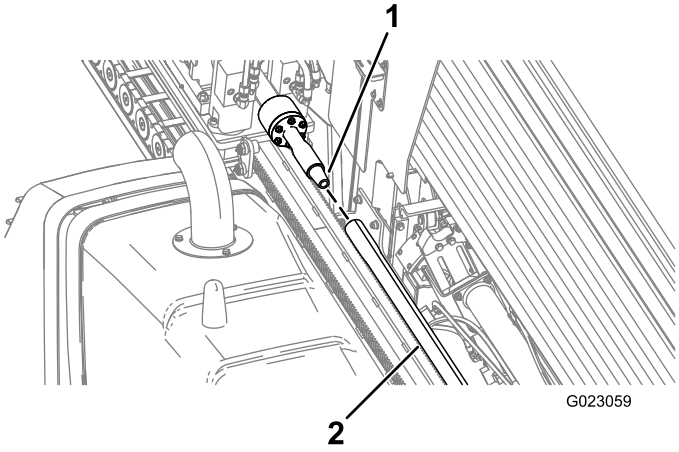

Figure 48

1. Drill spindle
2. Pipe

10. Move the drive carriage slowly down the frame until the male threads on the pipe are under the thread-joint-compound applicator, and apply thread-joint compound to the threads.
11. Continue to rotate the drill spindle clockwise, until the male pipe thread is fully seated into the sonde housing or lead bar.
12. Release and retract the pipe-gripper cam to the HOME position.

    Important: Ensure that you fully retract the pipe gripper and rotate it all the way out or the carriage may collide with the gripper, damaging the machine.

13. Raise the pipe elevator.
14. Retract the cam to the HOME position (past the fourth row of pipes).

Setting up the Drill Head and the Tracking System

The drill head consists of 2 parts, the drill bit and the sonde housing (Figure 49).

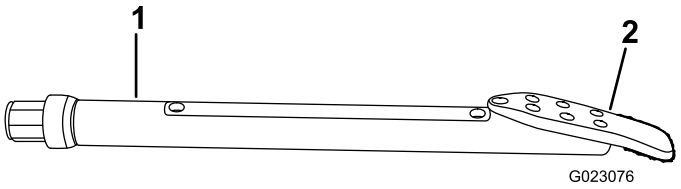

Figure 49

1. Sonde housing
2. Drill bit

Drill bits vary in size and type to meet the various soil conditions that you may need to drill through. Some of the possibilities are as follows:

- **Straight blade**—Used in a wide range of medium density soils.
- **Bent blade**—Used in medium to soft soils. This bit has an added 20 degree bend to increase steering performance in soft soils.
- **Triangle point blade**—Use in hard and rocky soils. This bit has carbide edges to reduce wear.

All of the above bits come in varying widths. A wider blade increases your ability to steer in soft soils. A narrower blade moves through hard soils better. Contact your Authorized Toro Dealer for a complete list of available blades.

The sondes and receivers are essential to track the position of the drill head throughout the drilling operation. The sonde housing on the drill head opens up to accept the sonde beacon which works with the receiver to track the location, pitch, direction, head orientation, and more of the drill head. Refer to the *Tracking System Operator's Manual* for instructions on using the system.

To install the sonde beacon into the sonde housing on the drill head, complete the following:

1. Replace the batteries in the sonde beacon as described in the *Tracking System Operator's Manual*.
2. Loosen the screws securing the housing cover to the housing and remove the cover (Figure 50).

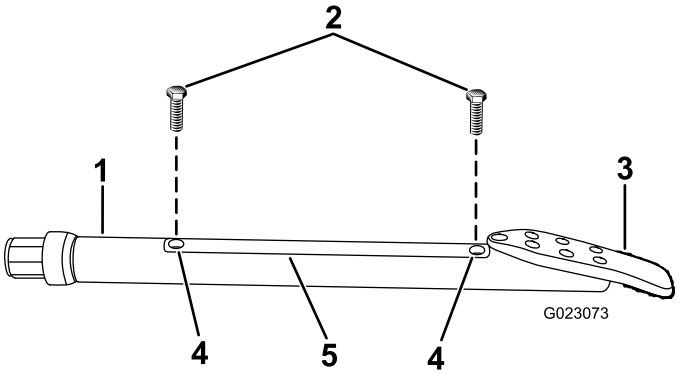

Figure 50

1. Sonde housing
2. Bolts
3. Drill bit
4. Cover holes
5. Cover

3. Insert the sonde beacon with the forward end toward the drill bit into the sonde housing (Figure 51).

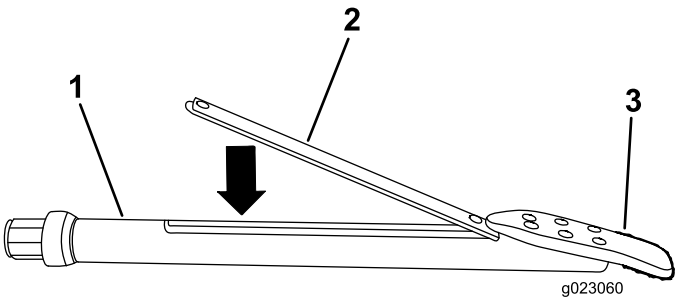

Figure 51

1. Sonde housing
2. Sonde beacon
3. Drill bit

4. Install the housing cover and secure it with the screws (Figure 50).

Installing the Drill Head

1. Using the exit-side-lockout transmitter, activate the exit-side lockout to disable the thrust and rotation of the carriage.

⚠ WARNING

If the drill rotates or extends while you or others are manually working on the drill bit or pipe in front of the machine, the worker could get caught in the bit or pipe, causing serious injury, amputation, or death.

- **Activate the exit-side lockout on the exit-side-lockout transmitter before approaching the dill bit or pipe when attached to the machine. This will disable the drill carriage.**
- **Do not wear loose clothing or jewelry when working on a drill bit or pipe attached to the machine. Tie long hair up and out of the way.**

2. Place the lead bar through the lower wrench (stationary wrench) as shown in Figure 52.

Important: Do not clamp the wrench on the body of a pipe, or it may damage the pipe. Grip the pipes on the thickened area near the joint.

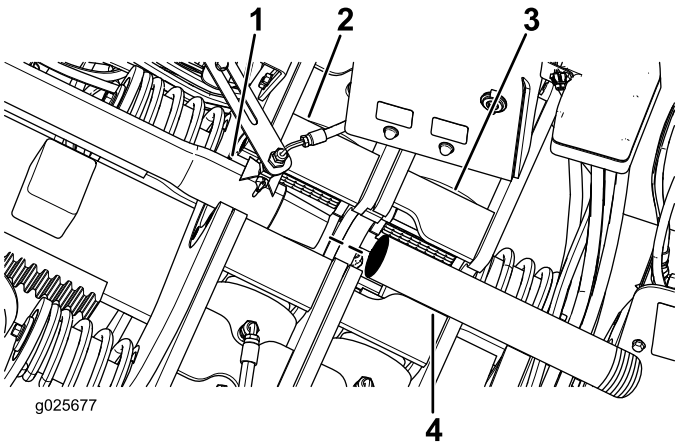

Figure 52

1. Drill pipe
2. Upper wrench (makeup/breakout wrench)
3. Lower wrench (stationary wrench)
4. Lead bar

3. Hand thread the lead bar onto the drill spindle pipe threads, then move away from the front of the machine.
4. When the area is clear of people, activate the exit-side lockout using the exit-side-lockout transmitter (the OK-to-Drill light on the control panel should illuminate); press the exit-side-lockout, RESET switch on the control panel.
5. Using the lower wrench (stationary wrench), clamp the lead bar, and tighten the drill spindle to full-seat threads.
6. Double check the drill head and bit to ensure that the fluid ports are clean and free from obstructions.
7. Install the drill head onto the end of the lead bar as directed by the drill head manufacturer, then move away from the front of the machine.

Important: Do not pull the drill head into the pipe guide, or you may damage the machine or the drill head.

Boring the Entry Shaft

The first step in boring is to create the entry shaft. In this step, you push and bore the drill bit and first few pipes into the ground at an angle from 0 to 16 degrees (with the tracks flat on the ground) until you reach the desired depth of installation.

Important: Drill and ream in a clockwise rotation. If you use a counterclockwise rotation, the pipes will disconnect from each other and may be disconnected underground.

1. When the area is clear of people, activate the exit-side lockout using the exit-side-lockout transmitter (the OK-to-Drill light on the control panel should illuminate); press the exit-side-lockout, RESET switch on the control panel.
2. Turn on the drilling-fluid-pump switch, and allow the fluid pressure to build to 1,379 to 2,068 kPa (200 to 300 psi).
3. Rotate the drill head until the bit is at the 6 o'clock position.
4. Move the carriage forward, driving the bit straight into the ground until the entire dill housing is underground.
5. Continue pushing forward, and begin rotating the drill spindle clockwise to initiate the drilling action.
6. Drill forward until the carriage reaches the end of the frame, then retract it about 6 mm (1/4 inch).

Adding Drill Pipes

1. Align the pipe joint in the wrench assembly.
2. Close the lower wrench (stationary wrench) onto the first pipe.

Note: The drilling fluid will automatically shut off when you activate the upper wrench (makeup/breakout wrench).

3. Pull back the carriage approximately 12.7 mm (0.5 inch).

Note: This will allow the carriage to float, and will not damage the pipe threads.

4. Rotate the drill head counterclockwise until the spindle is completely removed from the pipe.

5. Spray the spindle with thread joint compound, then return the drive carriage to the upper end of the frame.
6. Rotate the pipe-gripper cam to the closest row of pipes in the pipe holder.
7. Lower a pipe into the pipe-gripper cam, and grip it in place.
8. Rotate the pipe gripper until the pipe is centered in front of the spindle on the drive carriage.
9. Rotate the drill spindle clockwise and move the carriage slowly forward to insert the spindle into the female end of the pipe (Figure 48).

   Note: Tighten the joint until the pipe is rotating with the spindle.
10. Move the drive carriage slowly down the frame until the male threads on the pipe are under the thread-joint-compound applicator, and apply thread-joint compound to the threads.
11. Rotate the drill spindle clockwise and move the carriage slowly forward to insert the male end of the pipe into the female end of the previous pipe.

    Note: Tighten the joint until you reach no more than 2,304 N-m (1,700 ft-lb).
12. Release and rotate the pipe-gripper cam clockwise to the HOME position.

    Important: Ensure that you fully rotate the pipe-gripper cam, or the carriage may collide with the gripper, damaging the machine.
13. Rotate the main cam past the fourth row of pipe to the HOME position.

Software version K or newer: After loading the first pipe the software will skip the certain proximity switches to improve operator productivity. The grippers will also function when the pipe loading cam is extended and retracted without operator input.

Steering the Drill Head

The drill bit is shaped like a wedge, angled from one side of the bit to the other. When you push the bit through the soil without rotating it, it will veer toward the direction the wedge is pointing. When you rotate the pipe and drill head, it bores through the soil in a straight path.

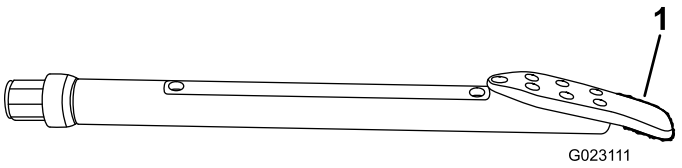

Figure 53

1. Drill bit

When drilling, the receiver operator follows the drill head as it progresses. The receiver receives signals from the sonde in the drill head identifying its position, depth, pitch, direction, transmitter temperature, and orientation in the soil. The remote console is a screen that remains near you (the drill operator) to show you the information from the receiver while drilling so that you can make steering decisions.

For detailed information on using the receiver and remote console to guide the drill head, refer to the *Operator's Manual* that came with your receiver.

Important: Do not steer the drill head more than 20 cm (8 inches) off center for every 3 m (10 ft) of forward travel. If you steer more than this, you will damage the drill pipes.

Boring the Horizontal Shaft

After creating the entry shaft, you gradually steer the drill head up while pushing forward, following the planned bore path. When you reach the desired depth, level out the drill head and bore the horizontal shaft, adding pipes as you go. While boring, pay close attention to the information relayed back to you by the receiver operator about the status and location of the drill head to ensure that you are following the planned path.

Important: While drilling, watch the sonde temperature. All sondes have a maximum temperature, above which they will be damaged. Friction between the drill head and the soil will cause the temperature to raise. To reduce the temperature, slow down, decrease forward pressure, and increase the drilling-fluid flow. If the drill head is entering a soil type other than what it is designed for, that can also raise the temperature. Assess the situation and pull out the drill head and change it if necessary.

If you run into an obstruction, do the following:

1. Increase the flow of the drilling fluid for a few seconds without drilling, then attempt to continue drilling forward.

Note: This may loosen the obstruction and allow you to push past it.

2. If the obstruction persists, try one or more of the following options:

   - If the obstruction is in an area where you can dig, stop the drill head with the Exit Side Lockout and dig down to the obstruction to identify it and remove it if possible.
   - Pull the drill head back 15 m (50 ft) or more and steer the drill head to the side, marking a new drill path around the obstacle.

     Important: Do not steer the drill head more than 20 cm (8 inches) off center for every 3 m (10 ft) of forward travel. If you steer more than this, you will damage the drill pipes.

   - If the obstruction is actually a change in soil type, such as a zone of rocky soil, pull the drill head all the way back and change to a drill bit appropriate for drilling through the new soil type.

Exiting the Ground

As you approach the end of the bore, steer the drill head to the exit point, keeping the steering limits in mind as you do so. Before exiting the ground, ensure that everyone is away from the exit point. As soon as you break through, stop the drilling-fluid flow. Extend the drill forward until the entire drill head is out of the ground.

Backreaming and Pullback

After drilling the initial bore, you attach a reamer to the pipe, which is then connected to a the product that you are installing. The reamer is designed to widen the bore, pack the walls, and lubricate the passage of the product into the bore.

The following reamers are available from your Authorized Toro Dealer in various sizes to meet your needs and soil conditions:

- **Carbide step-wing cutter**—Use this reamer in sandy and medium clay soil conditions to mix the drilling fluid with the soil, making a mixture that flows easily around the product being pulled.
- **Cast cone packer**—Use this reamer in soils that pack easily, such as soft clay, peat, and loam, to pack the sides of the bore, maintaining the bore opening.
- **Fluted reamer**—Use this reamer in hard clay and rocky soils; it combines the features of the other 2 reamers.

Connecting the Reamer and Product

⚠ WARNING

If the drill rotates or extends while you or others are manually working on the drill bit or pipe in front of the machine, the worker could get caught in the bit or pipe, causing serious injury, amputation, or death.

- **Enable the exit-side lockout on the exit-side-lockout transmitter before approaching the dill bit or pipe when attached to the machine. This will disable the drill carriage.**
- **Do not wear loose clothing or jewelry when working on a drill bit or pipe attached to the machine. Tie long hair up and out of the way.**

1. Using the exit-side-lockout transmitter, enable the exit side lockout.
2. Remove the drill head from the lead bar.
3. Double check the reamer to ensure that the fluid ports are clean and free from obstructions.
4. Install the reamer and swivel onto the end of the lead bar as directed by the reamer manufacturer.
5. Connect the product to the reamer using an appropriate pulling connection; refer to your Authorized Toro Dealer to acquire the appropriate puller to meet your requirements.

Removing Drill Pipes

1. Using the exit-side-lockout transmitter, enable the exit side lockout.
2. Install a drill-pipe wiper around the pipe and into the retaining bracket on the front of the machine.

   Note: This will remove most of the dirt and mud from the pipe as you pull it back into the machine, keeping the machine clean. Contact your Authorized Toro Dealer to purchase drill-pipe wipers.

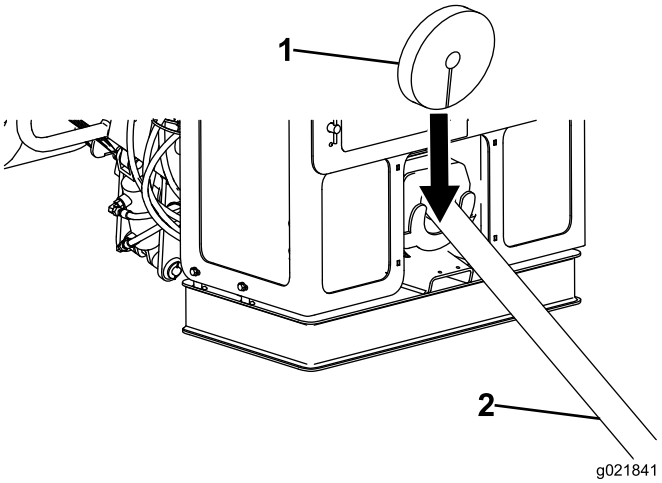

Figure 54

1. Drill-pipe wiper
2. Drill pipe

3. Disengage the exit-side lockout and reset the system.
4. Begin rotating the drill spindle clockwise and slowly retract the drive carriage to pull the pipe back into the machine.
5. When the joint between the pipes is centered between the 2 wrenches, the drive carriage will stop, and a green light will illuminate below the spray valve.
6. Close the lower wrench (stationary wrench) onto the pipe joint.

   Note: The drilling fluid will automatically shut off when you close the lower wrench (stationary wrench).
7. Rotate the pipe cam to the drill frame, extend pipe-gripper arms to the pipe, and grip the pipe to support it.
8. Close the upper wrench (makeup/breakout wrench) onto the pipe joint.
9. Rotate the upper wrench (makeup/breakout wrench) counterclockwise until the joint is loosened.
10. Release the upper wrench (makeup/breakout wrench).
11. Pull back the carriage approximately 12.7 mm (0.5 inch).

    Note: This will allow the carriage to float, and will not damage the pipe threads.
12. Rotate the drill spindle counterclockwise, moving rearward slowly until the pipes are separated.
13. Move the drill carriage back until the male, pipe threads just clear the female end of the lower pipe, then close the upper wrench (makeup/breakout wrench) onto the pipe end, but not on the threads.
14. Rotate the drill spindle counterclockwise until the upper-pipe joint is loose but not separated.
15. Release the upper wrench (makeup/breakout wrench).
16. Move the drill carriage back until the pipe is lined up with the pipe holder.
17. Rotate the drill spindle counterclockwise, moving rearward slowly until the spindle fully separates from the pipe.
18. Rotate the pipe-gripper arms until the pipe rests inside the pipe-gripper cam.
19. Rotate the pipe cam to the desired row.

    Note: Fill the outside rows first.
20. Release the pipe gripper, and raise the pipe into the holder row with the pipe elevator.
21. Rotate the pipe cam past the fourth row of pipes to the HOME position.

    Important: Ensure that you fully retract the pipe gripper, or the carriage may collide with the gripper, damaging the machine.
22. Move the drill spindle down the frame under the thread-joint-compound applicator, and spray the spindle with thread joint compound.
23. Rotate the drill spindle clockwise, and move the carriage slowly forward to insert the spindle into the female end of the pipe secured in the lower wrench (stationary wrench).
24. Tighten the joint until you reach the full machine torque.
25. Release the wrench and continue reaming/retraction as needed.

Removing the Last Pipe and the Reamer

Important: Do not pull the drill head into the pipe guide, or you may damage the machine or the drill head.

1. Using the exit-side-lockout transmitter, enable the exit side lockout.
2. After the reamer has cleared the ground, if you have not already done so, disconnect the product being installed from the reamer.
3. Connect the drilling fluid pump to a source of clean water.
4. Turn the pump on to flush clean water through the pump, spindle, and reamer until the water runs clear.

5. Remove and store the last pipe; refer to Removing Drill Pipes (page 57).
6. Leave the lead bar clamped in the lower wrench (stationary wrench), but do not connect the drill spindle to the lead bar.
7. Remove the reamer from the end of the lead bar as directed by the reamer manufacturer.
8. Release the lower wrench (stationary wrench) and pull the lead bar out of the pipe guide.

Finishing the Job

Complete the following after each day of use:

- Connect the hand spray gun to the quick disconnect located at the rear compartment, and clean the machine with clean water; refer to Cleaning with the Spray-Hose Attachment (page 98).
- Add grease to the grease fittings; refer to Greasing the Machine (page 67).
- If the air temperature is below freezing or will be before the next use, refer to Preparing the Drilling-Fluid System for Cold Weather (page 95).
- Install the controls covers; refer to Operator-Controls Covers (page 24).
- Flush the drilling fluid out of the drilling-fluid pump with water or antifreeze.

  Important: The drilling-fluid pump may be damaged if the drilling-fluid dries up in the pump.

Using the TJC Applicator

Adjusting the Applicator Nozzle

You can adjust the applicator nozzle to spray thread-joint compound (TJC) either in a fan-shaped spray or as a stream.

- For fan-shaped spray, turn the spray valve on the side of the nozzle horizontal (Figure 55).
- For a stream, turn the spray valve on the side of the nozzle vertical (Figure 55).

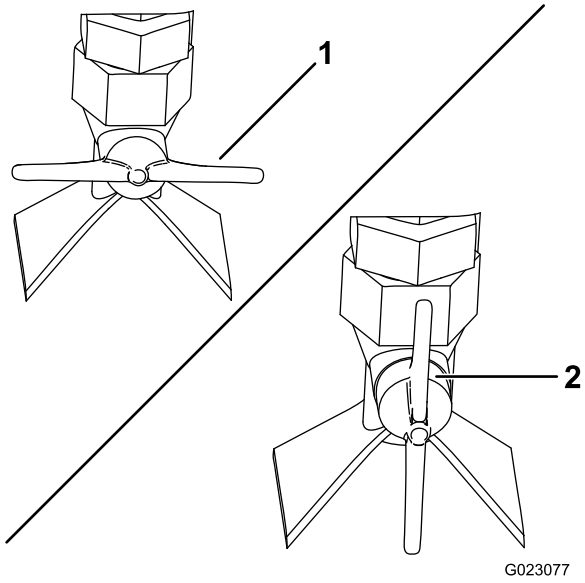

Figure 55

1. Spray valve—fan-shaped spray (horizontal)
2. Spray valve—stream (vertical)

Adjusting the TJC-Spray Volume

1. Loosen the jam nut on the adjustment bolt located on top of the TJC-applicator piston (Figure 56).

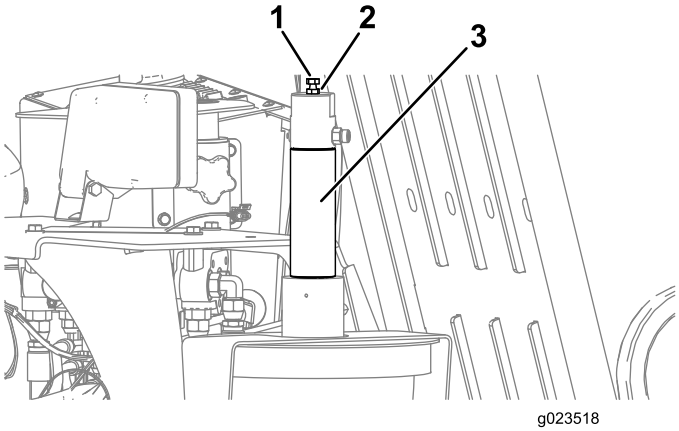

Figure 56

1. Adjustment bolt
2. Jam nut
3. TJC-applicator piston

2. Adjust the bolts as follows:
   - To increase the applied volume of compound, thread the bolt out (up).
   - To decrease the applied volume of compound, thread the bolt in (down).
3. When you have attained the desired application volume, tighten the jam nut to secure the adjustment.

Filling the TJC Applicator

1. Stop the machine and stop the engine.
2. Open the stake-down-guard door.
3. Loosen the wing nuts securing the cover straps to the machine (Figure 57).

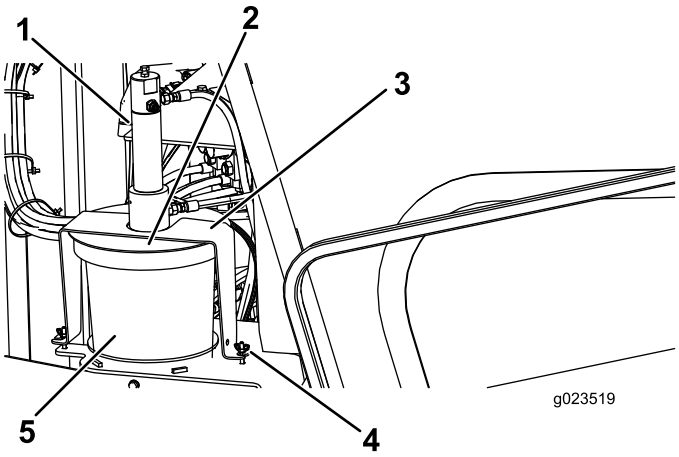

Figure 57

1. TJC-applicator piston
2. Cover
3. Strap
4. Wingnut
5. TJC bucket

4. Rotate the cover and pull the cover straps off the retaining bolts (Figure 57).
5. Lift the cover assembly off and out of the empty thread-joint-compound bucket (Figure 57).
6. Replace the empty bucket with a new full bucket.
7. Place the plunger into the new bucket and lower the cover assembly onto the bucket (Figure 57).
8. Slide the cover straps over the retaining bolts, and rotate the cover to seat the straps on the bolts (Figure 57).
9. Tighten the wing nuts.

Moving a Disabled Machine

Whenever the machine is stopped and the engine is not running, the hydrostatic brakes automatically engage. Do not attempt to tow the machine if it cannot move under its own power. If possible, repair the machine at the site. If this is not possible, use a crane and a spreader bar to lift the machine onto a trailer, using the lift points shown in Figure 58.

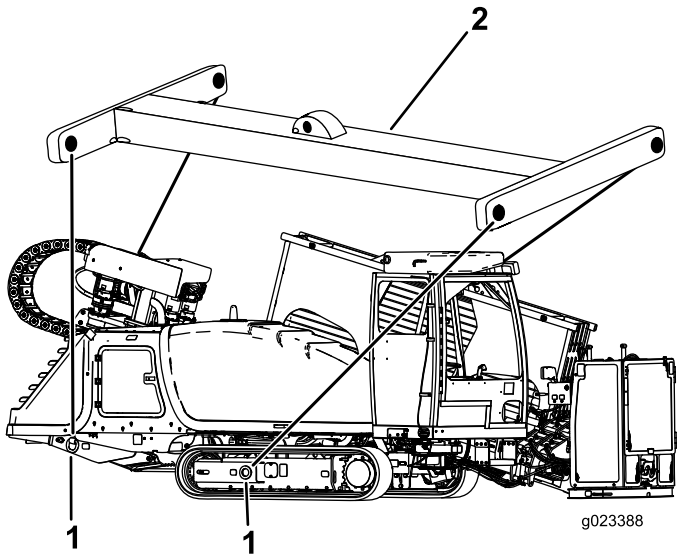

Figure 58

Repeat lift points on other side

1. Lift point
2. Spreader bar

Replacing the Pipe Holder

1. Ensure that the 2 upper pins and the 2 lower pins are installed to secure the pipe inside the pipe holder (Figure 59).

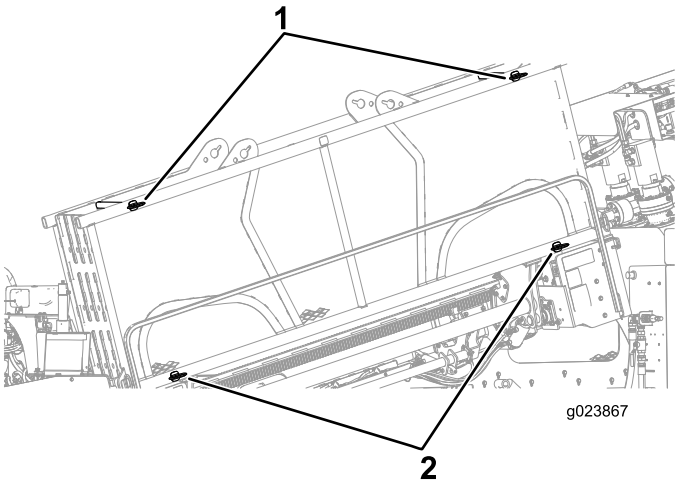

Figure 59

1. Upper pins
2. Lower pins

2. Remove the lower, outer pins on the pipe holder (Figure 60).
3. With a hoist capable of lifting 2,260 kg (5,000 lb), remove the pipe holder.

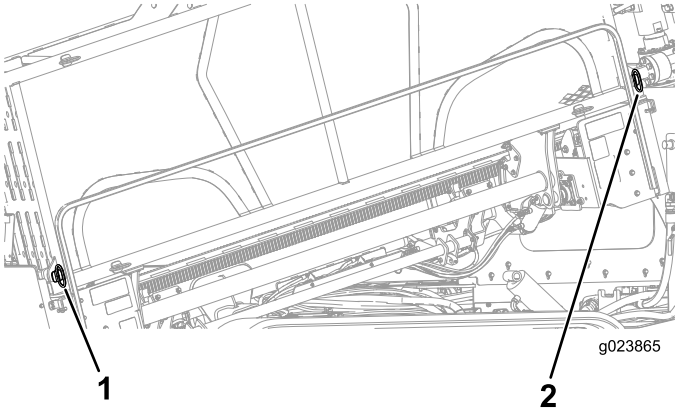

Figure 60

1. Front pin
2. Rear pin

Positioning the Cab (Model with Cab only)

Positioning the Cab for Drilling Operation

1. Push back on the SWING-ROCKER switch (until the cab stops) to swing the cab to the DRILL position (Figure 61).

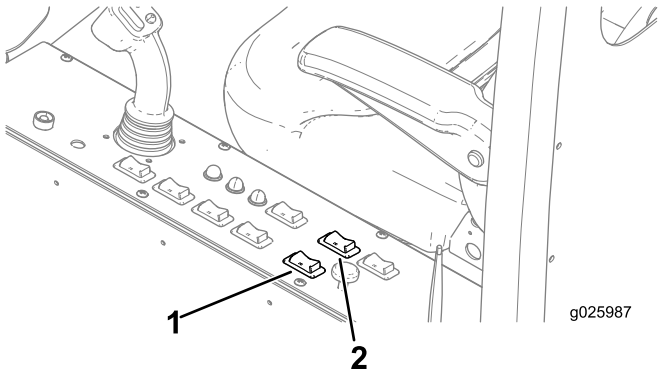

Figure 61

1. Swing rocker switch
2. Rotate rocker switch

Important: Ensure that you swing the cab out completely before rotating, or you may contact the machine, causing damage to the cab.

2. Push back on the ROTATE-ROCKER switch to rotate the cab to the desired drill position (Figure 61).

Positioning the Cab into Transport Mode

1. Push forward on the ROTATE-ROCKER switch (until the cab stops) to rotate the cab to the TRANSPORT position (Figure 61).

Important: Ensure that you completely rotate the cab to the TRANSPORT position (clockwise) before swinging, or you may contact the machine, causing damage to the cab.

2. Push forward on the SWING-ROCKER switch (until the cab stops) to swing the cab to the TRANSPORT position (Figure 61).

Opening the Door (Model with Cab only)

Open the door from the outside by pulling on the handle, and swing the door to the left (Figure 62).

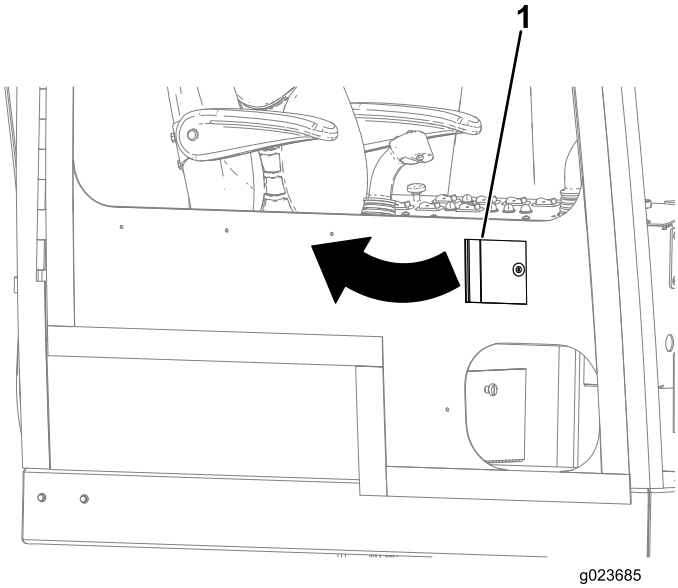

Figure 62

1. Door handle

Open the door from the inside by pulling the knob backward and pushing the door to the outside (Figure 63).

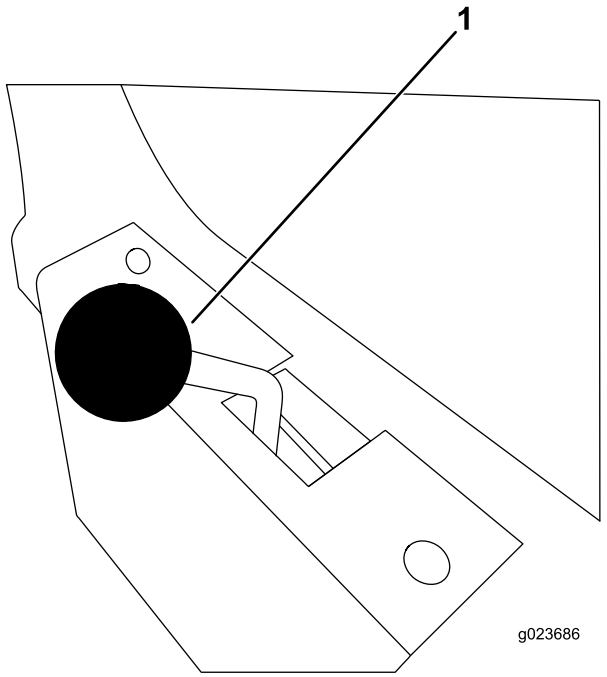

Figure 63

1. Door knob

Operating the Air Conditioning and Heating (Model with Cab only)

Air Conditioning the Cab

1. Push the AIR-CONDITIONING switch to the right to turn the air conditioning to the ON position (Figure 64).

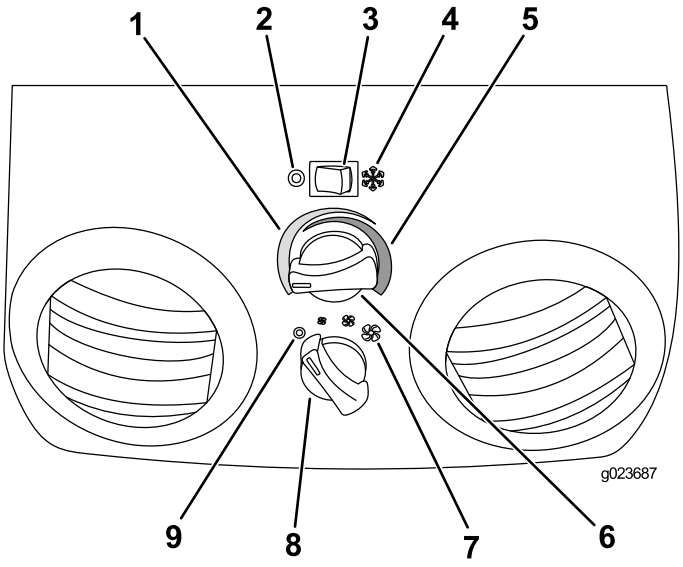

Figure 64

1. Cool/Cold temperature
2. Air-conditioning switch Off position
3. Air-conditioning switch
4. Air-condition switch On position
5. Warm/Hot temperature
6. Temperature knob
7. Fan speed (low, medium, or high)
8. Fan-speed knob
9. Fan Off position

2. Open the vents to increase or decrease the air flow.
3. Turn the TEMPERATURE knob to the left until you reach the desired temperature (Figure 64).
4. Turn the FAN-SPEED knob to either low, medium, or high (Figure 64).

Heating the Cab

1. Push the AIR-CONDITIONING switch to the left to turn the air conditioning to the OFF position (Figure 64).
2. Open the vents to increase or decrease the air flow.
3. Turn the TEMPERATURE knob to the right until you reach the desired temperature (Figure 64).
4. Turn the FAN-SPEED knob to either low, medium, or high (Figure 64).

Operating the Windshield Wipers (Model with Cab only)

Changing the Windshield-Wiper Speed

Turn the WINDSHIELD-WIPER knob (Figure 65) to the right increase the speed of the windshield wipers, or turn the knob to the left to decrease the speed.

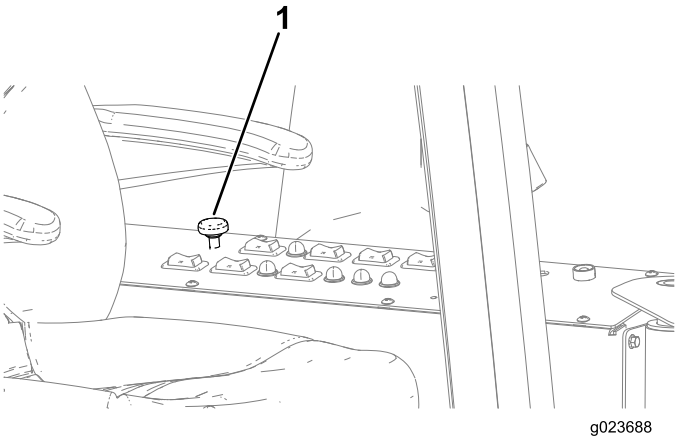

Figure 65

1. Windshield-wiper knob

Dispersing the Windshield-Washer Fluid

Push down on the WINDSHIELD-WIPER knob (Figure 65) to disperse the desired amount of windshield washer fluid.

Maintenance

Note: Determine the left and right sides of the machine from the normal operating position.

Recommended Maintenance Schedule(s)

Maintenance Service Interval	Maintenance Procedure
After the first 100 hours	• Check the stakedown planetary-drive oil level (Also, check if external leakage is observed). • Check the rotary motor planetary-drive oil level (Also, check if external leakage is observed). • Check the thrust motor planetary-drive oil. • Check the gearbox drive oil. • Change the gearbox-drive oil.
After the first 250 hours	• Adjust the valve clearance. • Change the planetary-drive oil.
Before each use or daily	• Check the fuel level. • Grease the machine. (Grease immediately after every washing). • Check the crankcase-vent tube and clean it if necessary. • Check the indicator on the display screen for a restricted air filter. • Check the engine oil level. • Check the track tension. • Check the coolant level in the radiator. • Check the hydraulic fluid level. • Check the drilling-fluid pump oil level. • Clean the machine with the spray-hose attachment.
Every 50 hours	• Check and clean the dust valve. • Remove air cleaner cover and clean out debris. Do not remove the filter. • Check the fuel-water separator for water and sediment. • Check the battery condition. • Check the tracks rotary motor planetary-drive oil level (Also, check if external leakage is observed).
Every 250 hours	• Clean or replace the air-cleaner filter. • Change the engine oil filter. • Change the engine oil. • Replace the primary and secondary fuel filters. • Check the condition of the engine-drive belt.
Every 300 hours	• Check the condition of the coolant system components. Clean dirt and debris from them and repair or replace the components as necessary.
Every 500 hours	• Inspect the fuel lines and connections. • Check the stakedown planetary-drive oil level (Also, check if external leakage is observed). • Check the rotary motor planetary-drive oil level (Also, check if external leakage is observed). • Check the thrust motor planetary-drive oil (or yearly, whichever comes first). • Check the gearbox drive oil (or yearly, whichever comes first). • Change the gearbox-drive oil (or yearly, whichever comes first). • Change the hydrostatic-charge filter. • Change the drilling-fluid pump oil.
Every 800 hours	• Change the planetary-drive oil (or yearly, whichever comes first).

Maintenance Service Interval	Maintenance Procedure
Every 1,000 hours	• Drain and clean the fuel tank. • Check the concentration of the coolant before the winter season. • Clean the cooling system. (Clean the cooling system if the coolant becomes dirty or rust colored.) • Check the tension on the engine drive belt. • Change the hydraulic fluid. • Change the high-pressure hydraulic filter (and as needed per the service indicator) • Changing the hydraulic-return filter (and as needed per the service indicator)
Every 2,000 hours	• Adjust the valve clearance.
Yearly or before storage	• Touch up chipped paint.
Every 2 years	• Replace moving hoses.

Important: **Refer to your Engine Operator's Manual for additional maintenance procedures.**

⚠ CAUTION

If you leave the key in the ignition switch, someone could accidently start the engine and seriously injure you or other bystanders.

Remove the key from the ignition before you do any maintenance.

⚠ WARNING

Improperly servicing or repairing the machine may cause injury or death.

If you do not understand the service procedures for this machine, contact your dealer or see the service manual for this machine.

⚠ WARNING

Raised equipment on the machine without an operator may cause injury or death.

Before you leave the operator's compartment, support or lower the equipment and stop the engine.

⚠ WARNING

Replace all covers and guards after you service or clean the machine. Do not operate the machine without the covers or guards in place.

Premaintenance Procedures

Opening the Front Hood

1. Park the machine on a level surface, stop the engine, and remove the ignition key.
2. Lift up on the latch as shown in Figure 66.

   Note: Ensure that the key is in the OPEN (horizontal) position as shown in Figure 66.

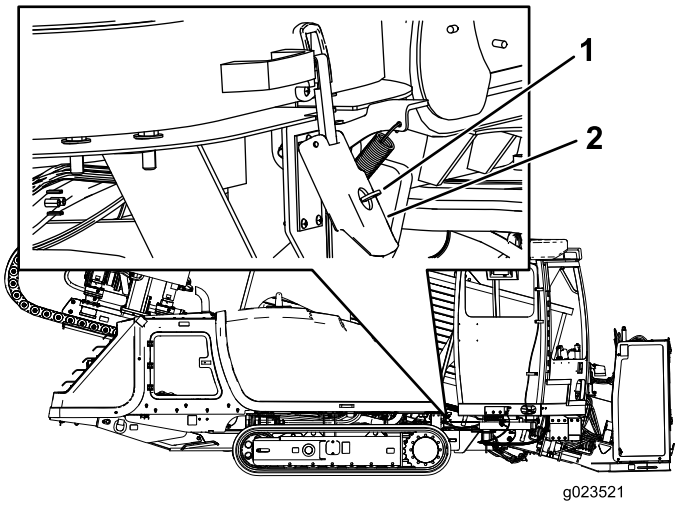

Figure 66

1. Key in the open (horizontal) position
2. Hood latch

3. Pull up on the hood latch as shown in Figure 67.

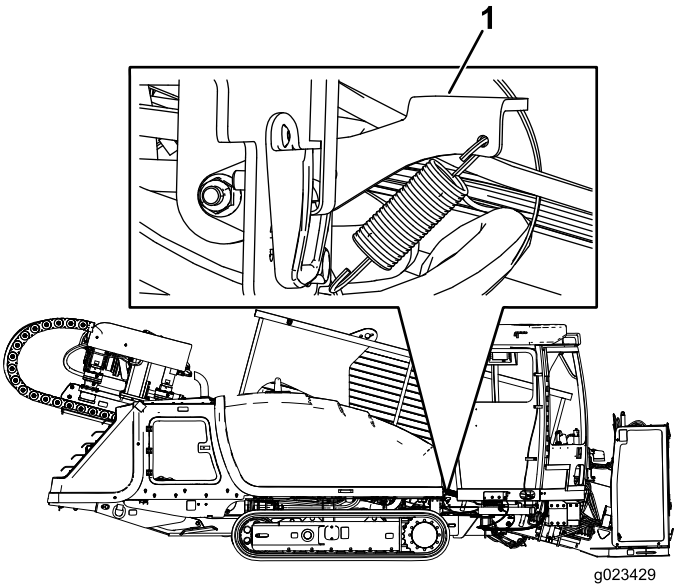

Figure 67

1. Hood latch

4. Keep the hood latch (Figure 67) pulled up, and lift up on the handle as shown in Figure 68.

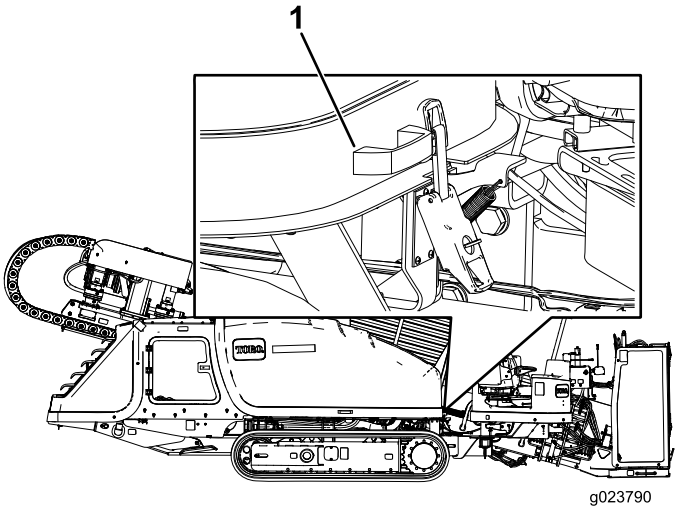

Figure 68

1. Hood handle

Opening the Rear-Access Door

1. Park the machine on a level surface, stop the engine, and remove the ignition key.
2. Push on the left side of the panel handle, and pull the panel open when the handle is released (Figure 69).

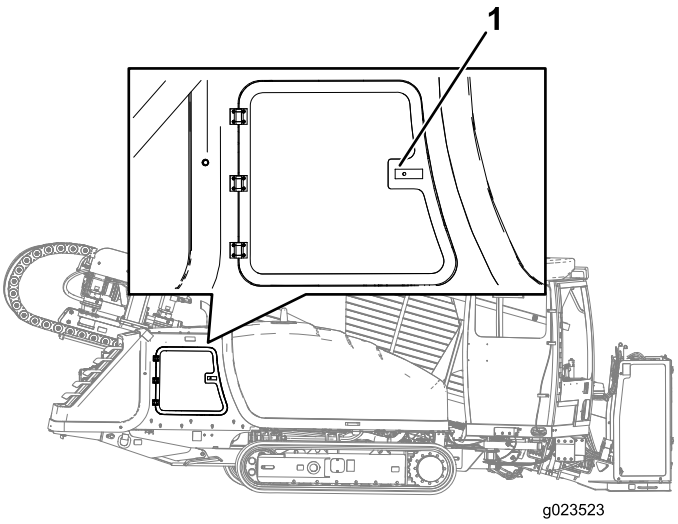

Figure 69

1. Rear-access door handle

Using the Cylinder Lock

⚠ WARNING

The thrust frame may lower when it is in the raised position, causing serious injury or death.

Install the cylinder lock before performing maintenance that requires the thrust frame to be raised.

Installing the Cylinder Lock

1. Start the engine.
2. Lower the thrust frame to the fully-lowered position.
3. Stop the engine.
4. Position the cylinder lock over the cylinder rod (Figure 70).
5. Secure the cylinder lock with the cotter pin and clevis pin (Figure 70).
6. Turn the engine to the ON position, and raise the thrust frame until it rests on the cylinder lock.

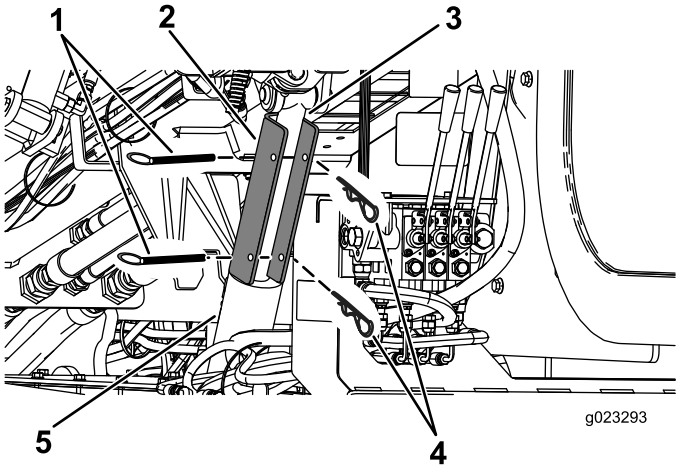

Figure 70

1. Cotter pin
2. Cylinder lock
3. Lift cylinder rod
4. Clevis pin
5. Lift cylinder

Removing and Storing the Cylinder Lock

1. Start the engine.
2. Lower the thrust frame to the fully lowered position.
3. Stop the engine.
4. Remove the cotter pin and the clevis pin that secure the cylinder lock (Figure 70).
5. Remove the cylinder lock.
6. Turn the engine to the ON position, and raise the thrust frame.
7. Store the cylinder lock at the rear of the pipe holder (Figure 71).

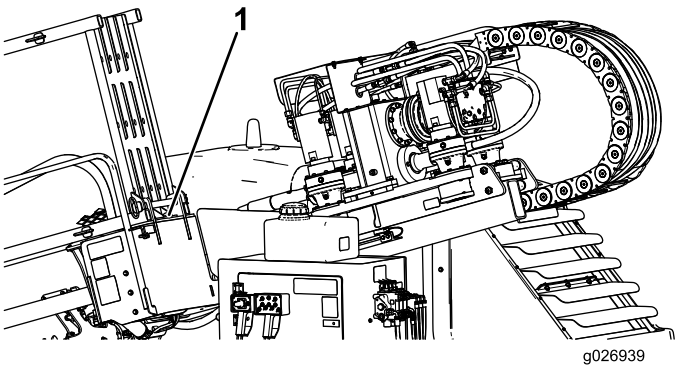

Figure 71

1. Location behind the rear of the pipe holder

Lubrication

Greasing the Machine

Service Interval: Before each use or daily (Grease immediately after every washing).

Grease type: General-purpose grease.

1. Park the machine on a level surface, stop the engine, and remove the ignition key.
2. Clean the grease fittings with a rag.
3. Connect a grease gun to each fitting.
4. Pump grease into the fittings until grease begins to ooze out of the bearings (approximately 3 pumps).
5. Wipe up any excess grease.

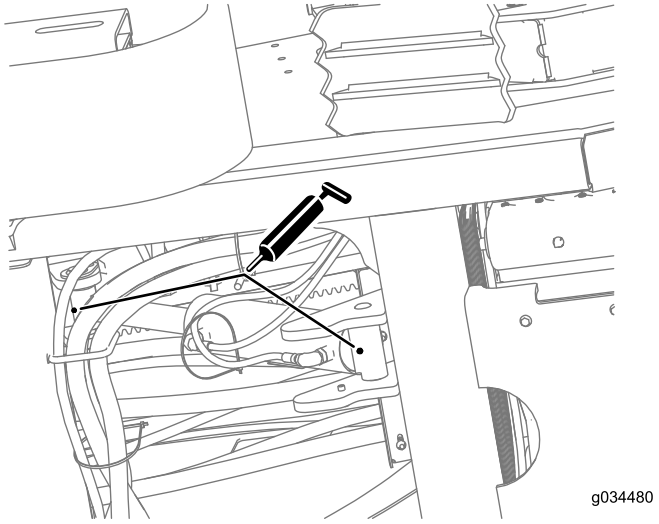

Figure 72

Cylinder assembly (view from under machine, near stabilizer foot)

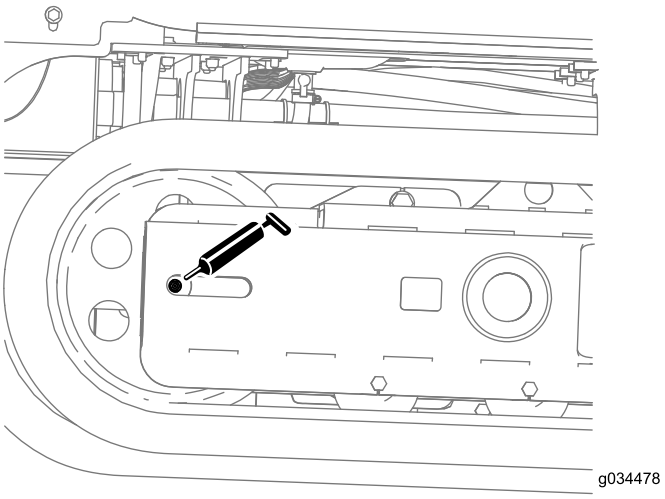

Figure 73

Track frame (repeat on other side)

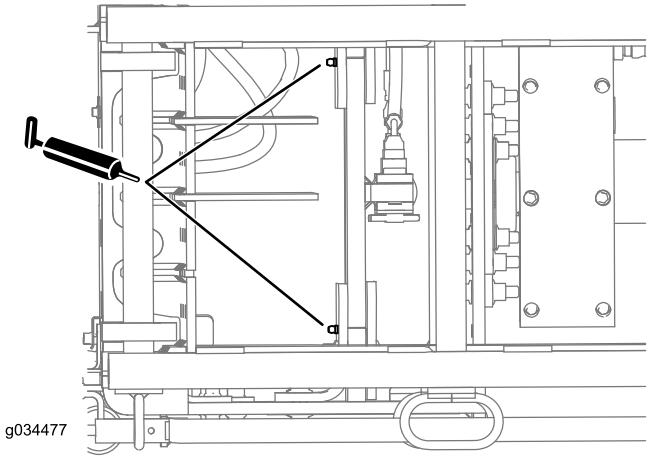

Figure 74

Front elevator assembly (top view)

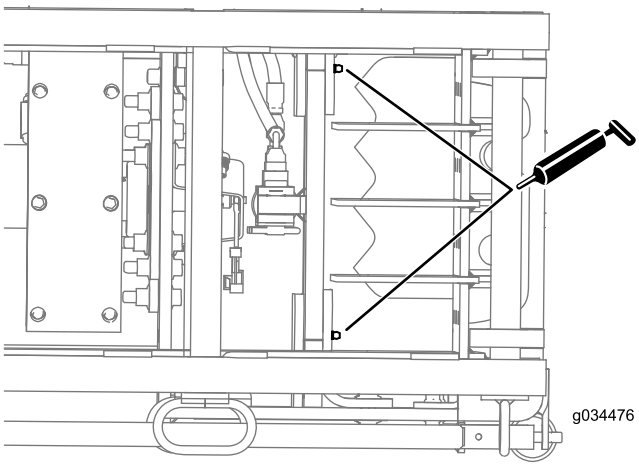

Figure 75

Rear elevator assembly (top view)

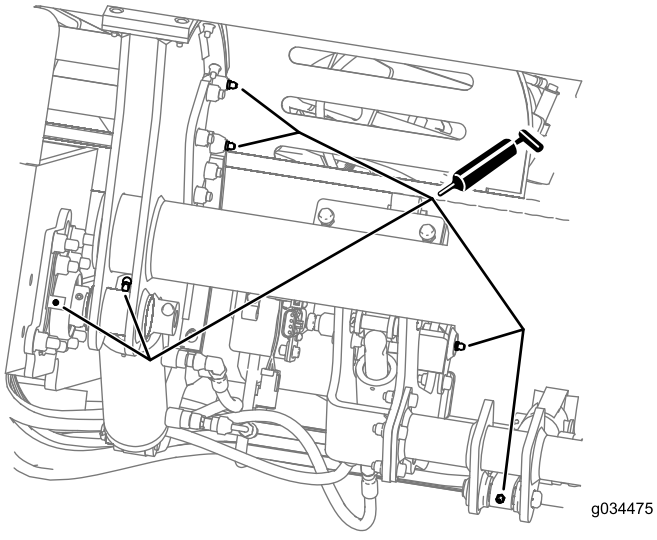

Figure 76

Front pipe-loader cam area (6 fittings)

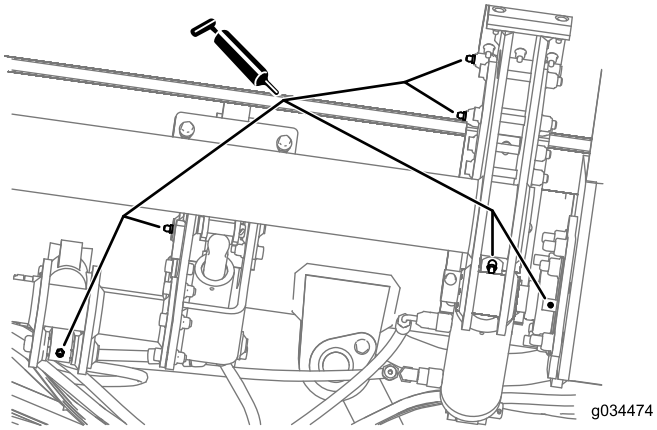

Figure 77

Rear pipe-loader cam area (6 fittings)

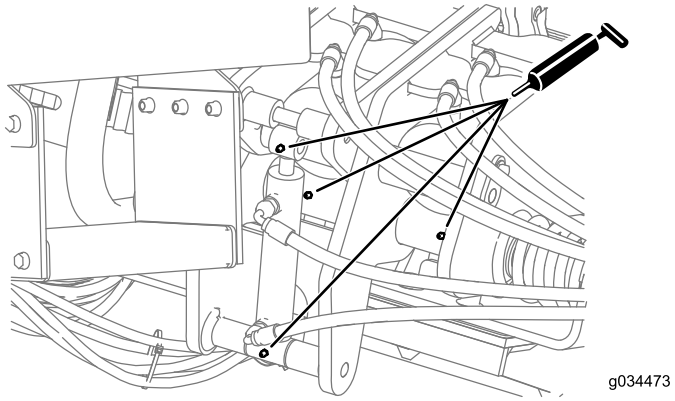

Figure 78

Hydraulic cylinder and wrench assembly

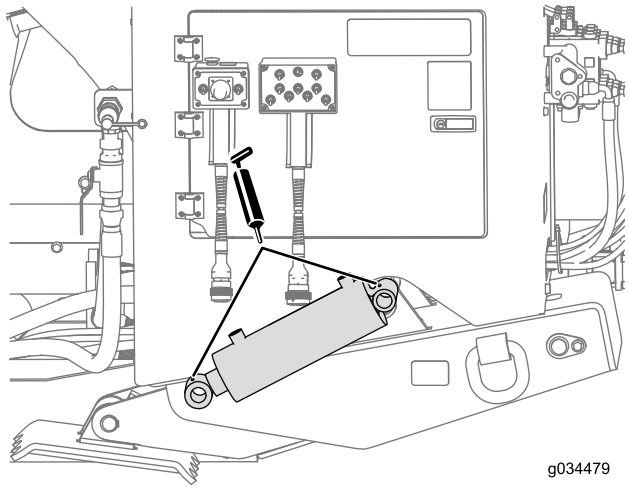

Figure 79

Stabilizer cylinder and foot (repeat on other side)

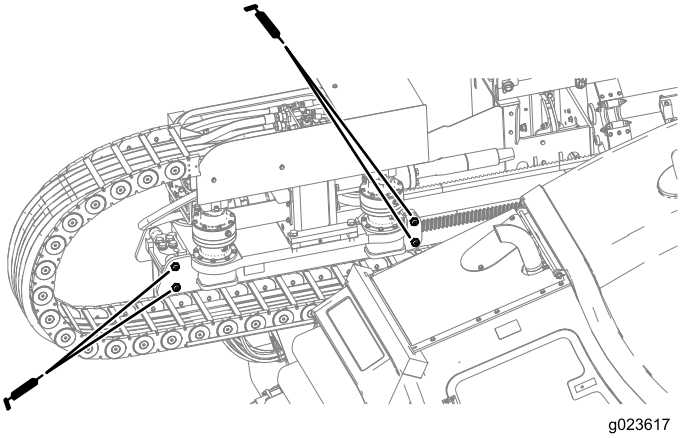

Figure 80

Carriage-roller bearings (operator's side shown; repeat on other side)

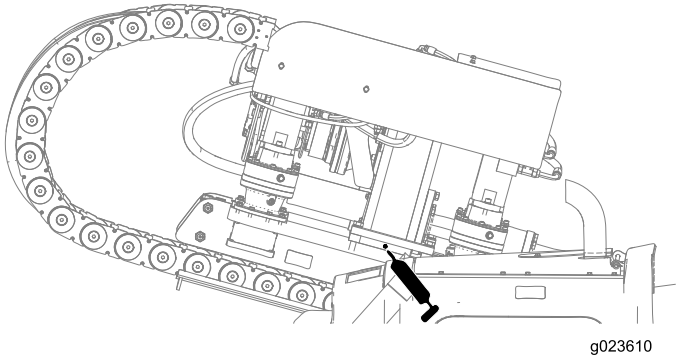

Figure 81

Gearbox float (operator's side shown; repeat on other side)

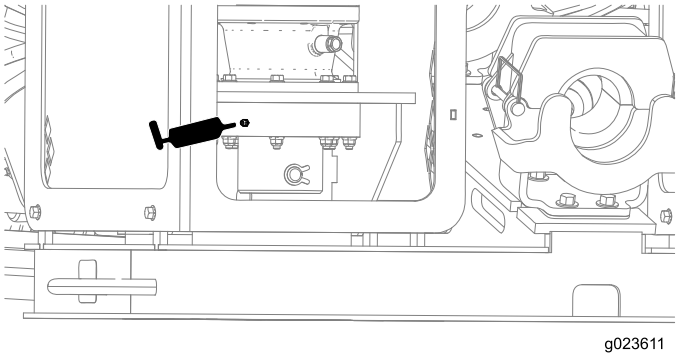

Figure 82

Stakedown shaft (left side shown; repeat on right side)

Engine Maintenance

Cleaning the Crankcase-Vent Tube

Service Interval: Before each use or daily—Check the crankcase-vent tube and clean it if necessary.

1. Park the machine on a level surface, stop the engine, and remove the ignition key.
2. Open the front hood.
3. Gently pull the crankcase-vent tube out (Figure 83).
4. Clean the end of the crankcase-vent tube (Figure 83).

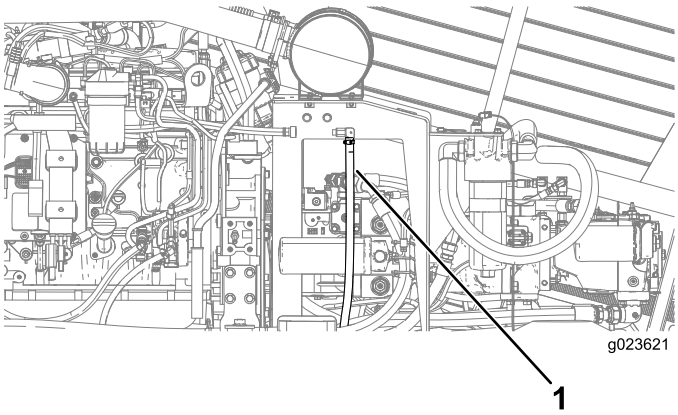

Figure 83

1. Crankcase vent tube

Servicing the Air-Cleaning System

Important: Do not remove the elements from the machine to check for dirty filters; use the following procedure instead.

Important: Do not replace the old air-cleaner filter with a filter that is more than 5 years old; check the date of manufacture on the end cap of the element.

Note: Every time you service the air-cleaner system, ensure that all hose connections and flanges are air tight. Replace all damaged parts.

- Check the air-cleaner body for damage which could cause an air leak. Replace it if it is damaged. Check the whole intake system for leaks, damage or loose hose clamps. Also, inspect the rubber intake hose connections at the air cleaner and the turbo to make sure that the connections are complete.
- Service the air-cleaner filter only when "Check Air Filter" is displayed on the screen. Changing the air filter before it is necessary only increases the chance of dirt entering the engine when the filter is removed.
- Be sure that the cover is seated correctly and seals with the air-cleaner body.

Checking the Air-Cleaner Indicator

Service Interval: Before each use or daily

1. Start the engine.
2. Check the restricted, air-cleaner indicator on the display screen; refer to the Air-Cleaner Indicator Screen in the *Software Guide* for this machine.
3. Replace the air-filter element(s) as follows:
   A. Replace the primary, air-cleaner filter; refer to Servicing the Air-Cleaner Filter (page 70).
   B. Repeat steps 1 and 2; if the restricted air-cleaner indicator is still shown on the display screen, replace the secondary, air-cleaner filter; refer to Servicing the Air-Cleaner Filter (page 70).

Cleaning the Dust Valve

Service Interval: Every 50 hours

1. Park the machine on a level surface, stop the engine, and remove the ignition key.
2. Open the rear-access door; refer to Opening the Rear-Access Door (page 65).
3. Squeeze the sides of the dust valve on the air-cleaner cover to release any collected water, dust, or dirt from the valve. (Figure 84).

   Note: Ensure that there are no obstructions inside the dust valve.

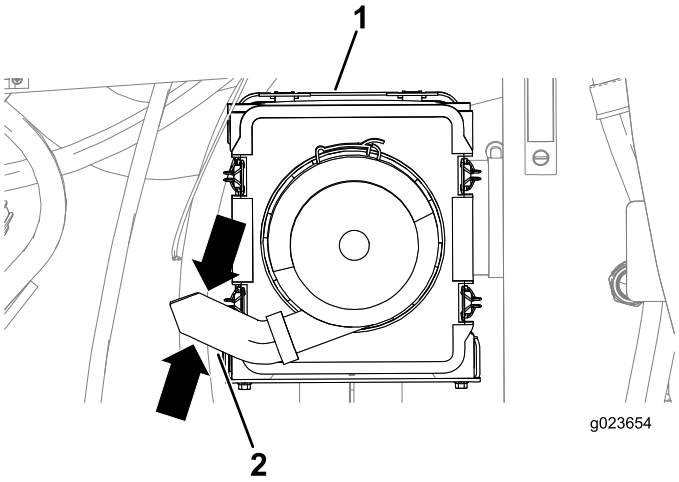

Figure 84

1. Dust valve
2. Air-cleaner cover

Servicing the Air-Cleaner Cover

Service Interval: Every 50 hours—Remove air cleaner cover and clean out debris. Do not remove the filter.

Removing the Air-Cleaner Cover

1. Park the machine on a level surface, stop the engine, and remove the ignition key.
2. Open the rear-access door; refer to Opening the Rear-Access Door (page 65).
3. Clean the outside of the air-cleaner canister with a clean, damp cloth.
4. Check the air-cleaner cover for damage which could cause an air leak. Replace a damaged air-cleaner body.

   Important: Service the air-cleaner filter only when "Check Air Filter" is displayed on the screen. Changing the air filter before it is necessary only increases the chance of dirt entering the engine when the filter is removed.
5. Pull the 4 latches for the air-cleaner cover outward (Figure 85).

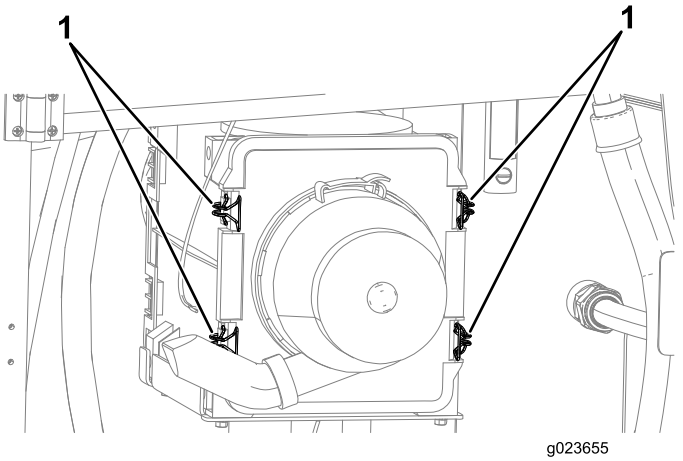

Figure 85

1. Air-cleaner cover latches

6. Pull the air-cleaner cover away from the filter housing and remove the cover.
7. Clean any debris from inside the cover.

   Important: If "Check Air Filter" is not displayed on the screen, do not remove the air filter.

Installing the Air-Cleaner Cover

1. Park the machine on a level surface, stop the engine, and remove the ignition key.
2. Align the dust cap on the air cleaner filter cover.
3. Align the air-cleaner cover with the filter housing.
4. Place air-cleaner cover inward until it is fully seated, and secure it with the latches (Figure 85).

Servicing the Air-Cleaner Filter

Service Interval: Every 250 hours

Replace the filters only when the "Check Air Filter" indicator appears on the display screen; refer to Checking the Air-Cleaner Indicator (page 69).

Note: Contact your Authorized Toro Dealer to order replacement filters.

1. Park the machine on a level surface, stop the engine, and remove the ignition key.
2. Open the rear-access door; refer to Opening the Rear-Access Door (page 65).
3. Before removing the filter, clean out all debris from the inside of the filter body using low-pressure air at 275 kPa (40 psi).

   Important: Avoid using high pressure air which could force dirt through the filter into the intake tract. This cleaning process prevents debris from migrating into the intake when the primary filter is removed.

4. Using the air-filter handles, remove the primary filter from the air-cleaner cover (Figure 86).

   Important: **Do not clean the used filter.**

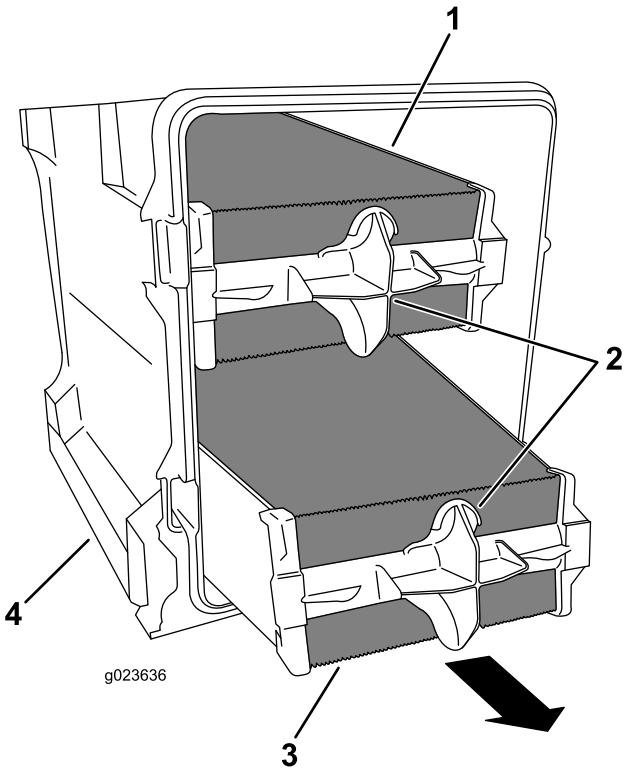

Figure 86

1. Top of primary filter
2. Air-filter handles
3. Bottom of primary filter
4. Air-filter cover

5. Inspect the new filter for shipping damage, checking the sealing end of the filter and the body.

   Note: Do not use a damaged element.

6. Insert the new primary filter by applying pressure to the outer rim of the filter to seat it in the air-cleaner cover.
7. Remove the rubber outlet valve from the cover, clean the cavity, and replace the outlet valve; refer to Cleaning the Dust Valve (page 70).
8. Install the cover; refer to Installing the Air-Cleaner Cover (page 70).

Servicing the Engine Oil and Filter

The engine is shipped with oil in the crankcase; however, check the oil level before and after you first start the engine.

Crankcase capacity: 7.5 L (7.9 US qt) with the filter.

Use only high-quality low ash SAE 15W-40 heavy-duty engine oil with an API classification of CJ-4 (ACEA E9) or higher.

While low ash SAE 15W-40 oil with an API classification of CJ-4 (ACEA E9) or higher is recommended for most climates, refer to Figure 87 for oil viscosity recommendations for extreme climates.

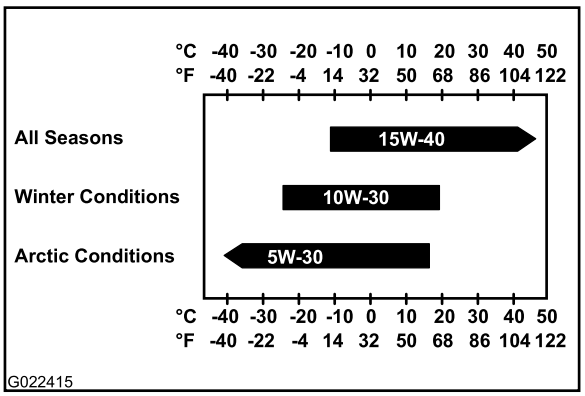

Figure 87

Note: Limited use of low-viscosity oils such as SAE 10W-30 with an API classification of CJ-4 (ACEA E9) or higher can be used for easier starting and providing sufficient oil flow at ambient temperatures below -5°C (23°F). However, continuous use of low viscosity oil can decrease engine life because of wear (Figure 87).

Toro Premium Engine Oil is available from an Authorized Toro Service Dealer in either 15W-40 or 10W-30 viscosity with API classification CJ-4 (ACEA E9) or higher. See the parts catalog for part numbers.

Checking the Engine-Oil Level

Service Interval: Before each use or daily—Check the engine oil level.

1. Park the machine on a level surface, stop the engine, and remove the ignition key.
2. Open the front hood.
3. Remove the dipstick (Figure 88), and wipe it clean.

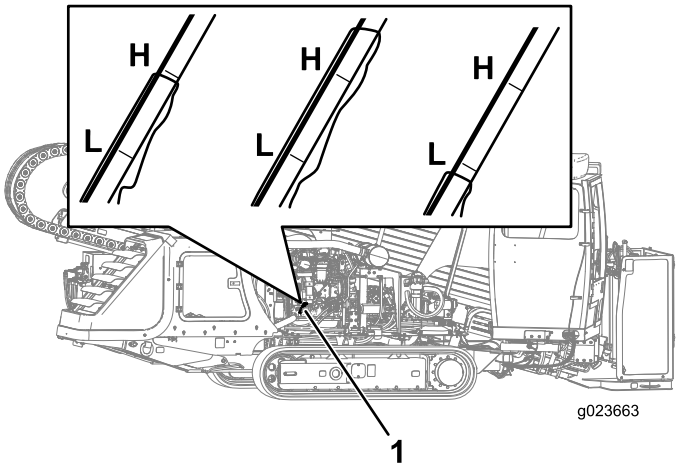

Figure 88
Operator's side

1. Dipstick

4. Insert the dipstick into the oil fill tube, pull the dipstick out again, and read the oil level on the dipstick.

   Note: The oil level on the dipstick should be at the High mark or between the Low and High marks. If the oil is below the Low mark, complete the following procedure:

   A. Remove the fill cap (Figure 89) and add oil until the level reaches the High mark. **Do not overfill.**

      Important: Use an oil canister with a bendable hose or a funnel to fill the machine with oil.

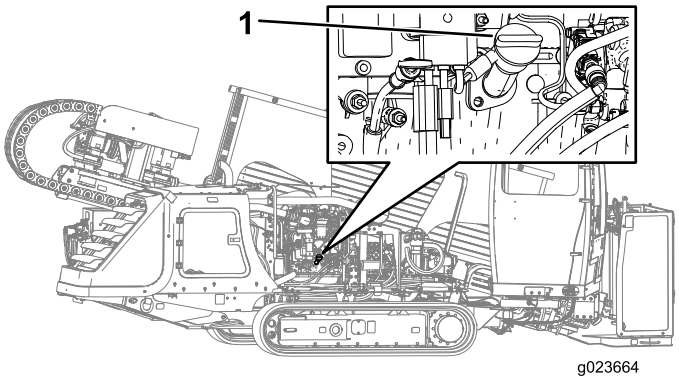

Figure 89

1. Oil-fill cap

   B. Install the oil-fill cap and the dipstick.

Changing the Engine-Oil Filter

Service Interval: Every 250 hours

1. Park the machine on a level surface, stop the engine, and remove the ignition key.
2. Open the front hood.
3. Align a drain pan or several rags under the oil filter and the oil-filter adapter (Figure 90).

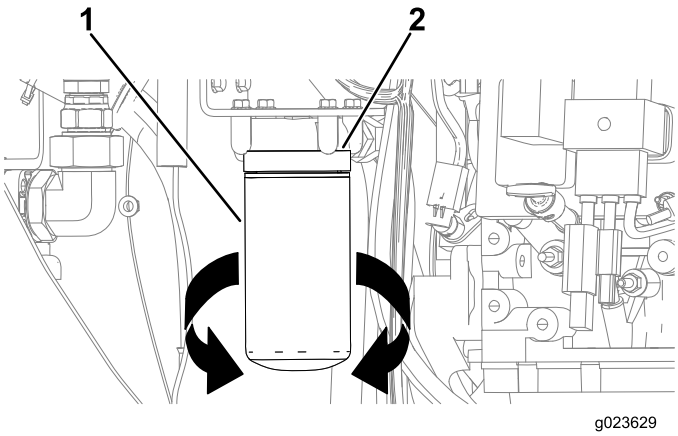

Figure 90

1. Oil filter
2. Oil-filter adapter

4. Rotate the oil filter counterclockwise and remove the oil filter (Figure 90).

   Note: Discard the oil filter.

5. Using a clean rag, wipe clean the surface of the oil-filter adapter where the oil filter seats with a clean rag.
6. Fill the new oil filter with the specified engine oil.
7. Apply a thin layer of the specified engine oil to the seal of the oil filter.
8. Align the oil filter to the oil-filter adapter, and rotate it clockwise until the seal of the oil filter contacts the oil-filter adapter (Figure 90).

   Important: Do not use an oil filter strap wrench to install the new oil filter. The wrench can dent an oil filter and therefore cause a leak.

9. Hand tighten the oil filter an additional 1/2 turn (Figure 90).
10. Remove the oil pan or rags you placed in step 3 and dispose of the used oil according to local codes.

Changing the Engine Oil

Service Interval: Every 250 hours

1. Park the machine on a level surface, stop the engine, and remove the ignition key.

⚠ WARNING

Allow the engine and oil to cool before draining the oil. Hot oil may cause serious injury.

2. Ensure that the drain hose (Figure 91) is carefully pulled up and the end of the hose is placed in a drain pan.

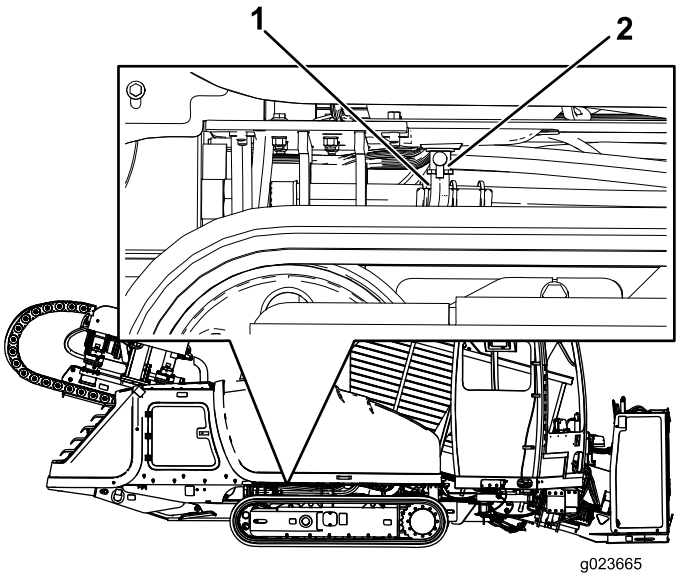

Figure 91

1. Drain hose
2. Drain valve

3. Open the drain valve (Figure 91).
4. Drain the oil into the drain pan.
5. When the oil stops, close the drain valve (Figure 91).
6. Place the drain hose back into the original position (Figure 91).
7. Change the engine oil filter; refer to Changing the Engine-Oil Filter (page 72).
8. Remove the oil-fill cap from the filler neck by pulling the cap upward.

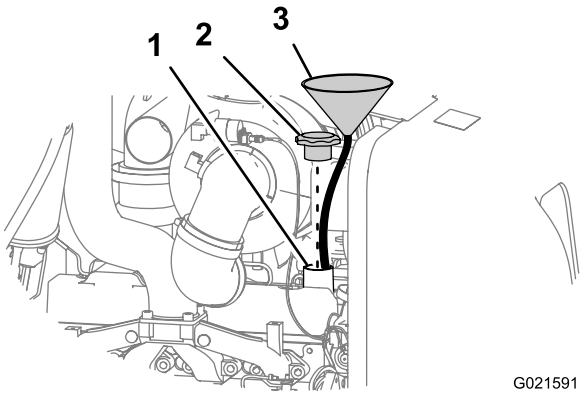

Figure 92

1. Filler neck
2. Oil-fill cap
3. Funnel

Note: Use a funnel with a flexible, attached hose to direct the engine oil into the engine.

9. Fill the crankcase with approximately 7.5 L (7.9 US qt) of the specified engine oil; refer to Servicing the Engine Oil and Filter (page 71).
10. Install the oil-fill cap.
11. Start the engine, run it at idle for about 2 minutes, and check for oil leaks.
12. Stop the engine and remove the key.
13. Wait for 2 or 3 minutes and check the oil level; refer to Checking the Engine-Oil Level (page 72).

Adjusting the Valve Clearance

Service Interval: After the first 250 hours

Every 2,000 hours

Refer to the engine owner's manual, which is included with the machine, for the adjustment procedure.

If you cannot adjust the valve clearance, contact your Authorized Toro Service Dealer.

Fuel System Maintenance

⚠ DANGER

Under certain conditions, diesel fuel and fuel vapors are highly flammable and explosive. A fire or explosion from fuel can burn you and others and can cause property damage.

- **Use a funnel and fill the fuel tank outdoors, in an open area, when the engine is off and cold. Wipe up any fuel that spills.**
- **Do not fill the fuel tank completely full. Add fuel to the fuel tank until the level is 25 mm (1 inch) below the bottom of the filler neck. This empty space in the tank allows the fuel to expand.**
- **Never smoke when handling fuel, and stay away from an open flame or where fuel fumes may be ignited by a spark.**
- **Store fuel in a clean, safety-approved container and keep the cap in place.**

Draining Water from the Fuel Filter

Service Interval: Every 50 hours—Check the fuel-water separator for water and sediment.

1. Park the machine on a level surface, stop the engine, and remove the ignition key.
2. Open the front hood.
3. Align a drain pan under the primary fuel filter (Figure 93).

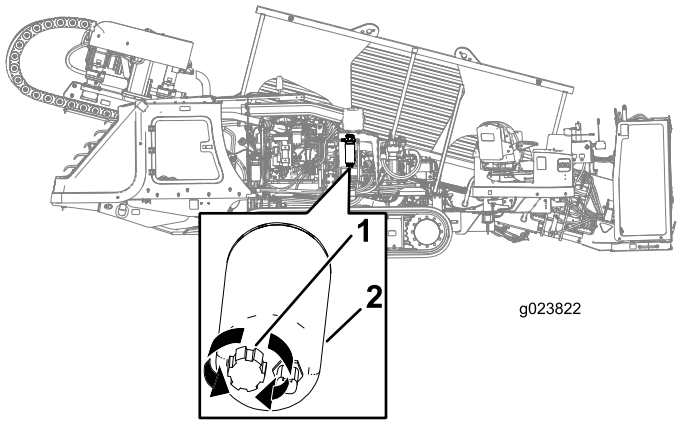

Figure 93

1. Drain valve
2. Primary fuel filter

4. Rotate the drain valve at the bottom of the primary fuel filter 2 or 3 turns counterclockwise, and drain any water and sediment from the fuel filter (Figure 93).

Note: If the fuel-water separator has any water or sediment, also drain the water and sediment from the fuel tank; refer to Draining Water from the Fuel Tank (page 74).

5. When clean fuel appears, rotate the drain valve clockwise until it is closed.

Note: Do not overtighten the drain valve.

6. Prime the fuel system; refer to Priming the Fuel System (page 75).

Draining Water from the Fuel Tank

1. Park the machine on a level surface, stop the engine, and remove the ignition key.
2. Place a drain pan under the drain plug in the fuel tank.
3. Loosen the drain plug until the water and sediment drain out (Figure 94).

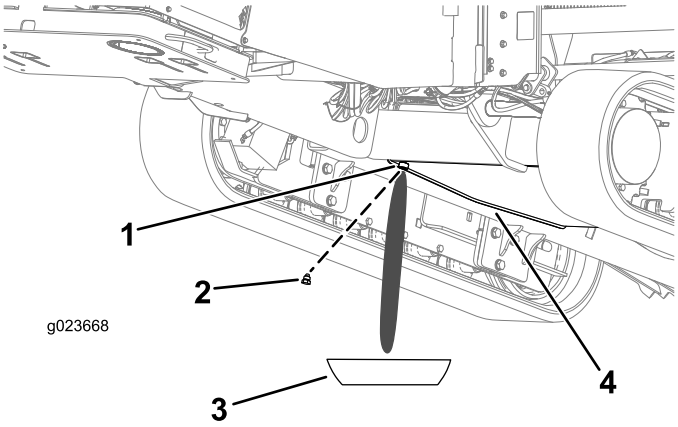

Figure 94

1. Drain-plug hole
2. Drain plug
3. Drain pan
4. Fuel tank

4. Clean the threads on the drain plug and apply 3 layers of PTFE sealing tape.
5. Clean the O-ring if it comes out.
6. When clean fuel appears, install the O-ring and drain plug, and tighten the plug securely.
7. Check the fuel-tank drain plug for leaks.

Priming the Fuel System

Note: Prime the fuel system whenever any of the following occurs:

- You drained water from the fuel filter.
- You replaced the fuel filter.
- You ran the engine until the fuel tank is empty or drained the fuel tank.

1. Park the machine on a level surface, stop the engine, and remove the ignition key.
2. Open the front hood; refer to Opening the Front Hood (page 65).
3. Ensure that the engine and the exhaust system are cool.
4. Ensure that the fuel tank is at least 1/4 full.
5. Rotate the BATTERY-DISCONNECT switch clockwise to the ON position.
6. Locate the PRIMING button on the top of the filter adapter for the primary fuel filter (Figure 95).

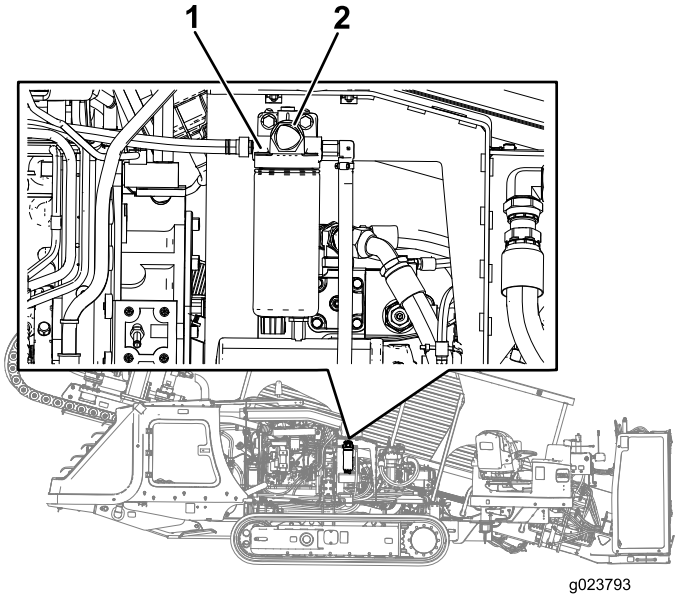

Figure 95

1. Primary fuel-filter adapter 2. Priming button

7. Press down and release the PRIMING button repeatedly until you feel resistance when pressing the PRIMING button (Figure 95).
8. If the engine does not start after priming the fuel system and making several attempts to start the engine, bleed the high-pressure fuel lines; refer to your engine owner's manual or contact your Authorized Toro Service Dealer.

⚠ WARNING

The fuel system is under high pressure. Bleeding the system without proper precautions and training could result in injury to you from injected fluid or fire or explosion.

Read the engine owner's manual for the proper bleeding procedure or contact your Authorized Toro Dealer.

Replacing the Fuel Filters

Service Interval: Every 250 hours—Replace the primary and secondary fuel filters.

Replacing the Primary Fuel Filter

1. Park the machine on a level surface, stop the engine, and remove the ignition key.
2. Open the front hood; refer to Opening the Front Hood (page 65).
3. Place clean rags under the primary fuel filter (Figure 95).
4. Loosen the hose clamps and separate the primary fuel filter from the fuel hoses (Figure 95).

   Note: Do not remove the hose clamps from the hoses.

   Note: Discard the fuel filter.
5. Align the new primary fuel filter to the hoses with the arrow printed on the filter pointing forward.
6. Slip the hoses over the hose fitting of the primary fuel filter, and tighten the hose clamps (Figure 95).
7. Replace the secondary fuel filter; refer to Replacing the Secondary Fuel Filter (page 76).

Replacing the Secondary Fuel Filter

1. Park the machine on a level surface, stop the engine, and remove the ignition key.
2. Open the front hood; refer to Opening the Front Hood (page 65).
3. Align a drain pan or several rags under the secondary fuel filter and the fuel-filter adapter (Figure 96).

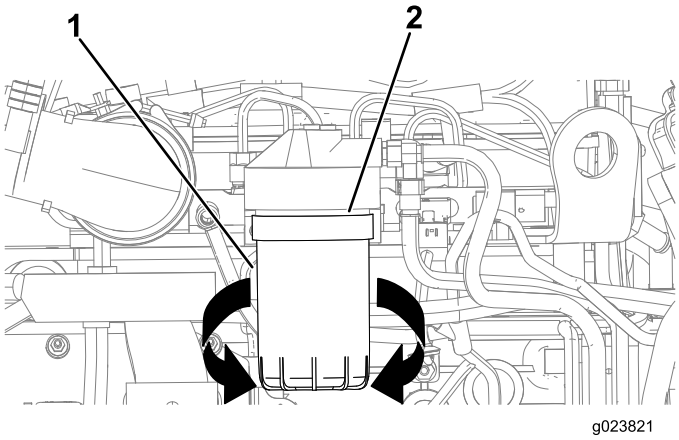

Figure 96

1. Secondary fuel filter
2. Filter adapter

4. Rotate the fuel filter counterclockwise and remove the fuel filter (Figure 96).

   Note: Discard the fuel filter.
5. Using a clean rag, wipe clean the surface of the fuel-filter adapter where the fuel filter seats with a clean rag.
6. Fill the new fuel filter with the specified fuel.
7. Align the fuel filter to the fuel-filter adapter, and rotate it clockwise until the seal of the fuel filter contacts the fuel-filter adapter (Figure 96).

   Important: Do not use a fuel filter strap wrench to install the new oil filter. The wrench can dent a fuel filter and therefore cause a leak.
8. Hand tighten the fuel filter and additional 1/2 turn (Figure 96).
9. Remove the drain pan or rags you placed in step 3 and dispose of the used fuel according to local codes.

Checking the Fuel Lines and Connections

Service Interval: Every 500 hours/Yearly (whichever comes first)—Inspect the fuel lines and connections.

Inspect the fuel lines and connections for deterioration, damage, or loose connections.

Draining and Cleaning the Fuel Tank

Service Interval: Every 1,000 hours/Yearly (whichever comes first)—Drain and clean the fuel tank.

Drain and clean the tank if the fuel system becomes contaminated or if the machine will be stored for an extended period of time. Use clean fuel to flush out the tank. Refer to Draining Water from the Fuel Tank (page 74) for draining instructions.

Note: Perform this procedure when the fuel level is low, to avoid draining a large volume of fuel.

Electrical System Maintenance

Servicing the Battery

Service Interval: Every 50 hours—Check the battery condition.

⚠ WARNING

CALIFORNIA
Proposition 65 Warning

Battery posts, terminals, and related accessories contain lead and lead compounds, chemicals known to the State of California to cause cancer and reproductive harm. Wash hands after handling.

Important: Before welding on the machine, disconnect the negative cable from the battery to prevent damage to the electrical system. Also, disconnect the engine and machine controller before welding on the machine.

Note: Check the battery condition weekly or after every 50 hours of operation. Keep the terminals and the entire battery case clean because a dirty battery discharges slowly. To clean the battery, wash the entire case with a solution of baking soda and water. Rinse with clear water. Coat the battery posts and cable connectors with Grafo 112X (skin-over) grease (Toro Part No. 505-47) or petroleum jelly to prevent corrosion.

⚠ WARNING

Exposure to battery acid or a battery explosion can cause serious personal injury.

Before you service a battery, wear face protection, protective gloves, and protective clothing.

⚠ WARNING

A battery contains sulfuric acid, which can cause serious burns; and it can produce explosive gases.

- **Avoid contact with skin, eyes, or clothing; flush affected areas with water.**
- **If taken internally, drink large quantities of water or milk. *Do not* induce vomiting. Seek medical attention immediately.**
- **Keep sparks, flames, and lit cigarettes and cigars away from the battery.**
- **Ventilate the battery when you are charging it or using it in an enclosed area.**
- **Wear eye protection when working near a battery.**
- **Wash your hands after handling a battery.**
- **Keep the battery out of the reach of children.**

⚠ WARNING

If you try to charge or jump start a frozen battery, it could be explosive, causing personal injury to you or others in the area.

To prevent the battery electrolyte from freezing, keep the battery fully charged.

⚠ WARNING

- **Sparks or a flame can cause hydrogen gas in a battery to explode.**
- **When you disconnect the battery cables, disconnect the negative (-) cable first.**
- **When you connect the battery cables, connect the negative (-) cable last.**
- **Do not short-circuit the battery posts with a metal object.**
- **Do not weld, grind, or smoke near a battery.**

Note: The electrical system in this machine is 12 volts.

Charging the Battery

⚠ WARNING

Charging the battery produces gasses that can explode.

Do not smoke near the battery, and keep sparks and flames away from the battery.

Important: Keep the battery fully charged. This is especially important to prevent battery damage when the temperature is below 32°F (0°C).

1. Park the machine on a level surface, stop the engine, and remove the ignition key.
2. Open the front hood.
3. Clean the exterior of the battery case and the battery posts.

   Note: Connect the leads of the battery charger to battery posts before connecting the charger to the electrical source.
4. Look at the battery and identify the positive and negative battery posts.
5. Connect the positive lead of the battery charger to the positive battery post (Figure 97).

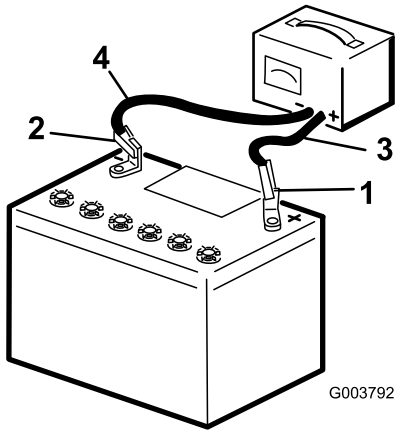

Figure 97

1. Positive battery post
2. Negative battery post
3. Red (+) charger lead
4. Black (-) charger lead

6. Connect the negative lead of the battery charger to the negative-battery post (Figure 97).
7. Connect the battery charger to the electrical source, and charge the battery according to the Battery-charging Table that follows.

   Important: Do not overcharge the battery.

Battery-charger Table

Charger setting	Charging time
4 to 6 amperes	30 minutes
25 to 30 amperes	10 to 15 minutes

8. When the battery is fully charged, unplug the charger from the electrical source, then disconnect the charger leads from the battery posts (Figure 97).

Jump-Starting the Machine

⚠ WARNING

Jump-starting the battery can produce gasses that can explode.

Do not smoke near the battery, and keep sparks and flames away from battery.

Note: This procedure requires 2 people to perform. Ensure that the person making the connections wears the proper face protection, protective gloves, and clothing.

1. Park the machine on a level surface, stop the engine, and remove the ignition key.
2. Open the front hood.
3. Ensure that all controls are in the NEUTRAL position.
4. Sit in the operator seat and have the other person make the connections.

   Note: Ensure that the jumper battery is a 12-volt battery.

   Important: If you are using another machine for power, ensure that the 2 machines are not touching each other.
5. Prepare to start the engine; refer to Starting and Stopping the Engine (page 47).
6. Remove the cover from the jump post (Figure 98).

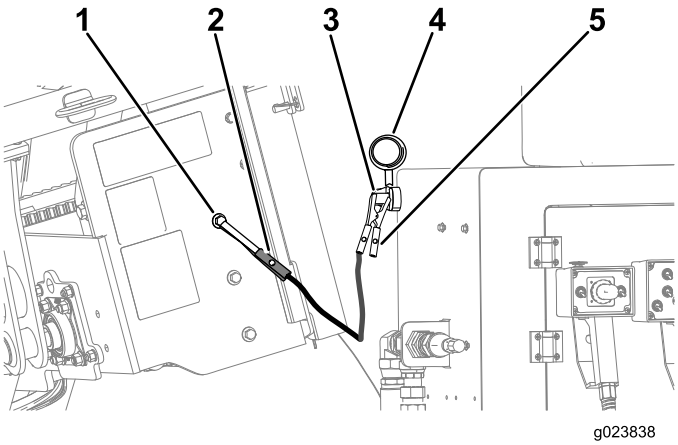

Figure 98

1. Ground point (unpainted bolt)
2. Jumper-cable clamp (negative)
3. Jump post
4. Cover
5. Jumper-cable clamp (positive)

7. Connect the positive (+) jumper cable to the jump post (Figure 98).
8. Connect the negative (-) jumper cable to a ground point, such as an unpainted bolt or chassis member (Figure 98).
9. Start the engine; refer to Starting and Stopping the Engine (page 47).

   Important: If the engine starts and then stops, *do not* operate the starter motor until the starter motor stops turning. *Do not* operate the starter motor for more than 30 seconds at one time. Wait 30 seconds before operating the starter motor to cool the motor and to build up the charge in the battery.
10. When the engine starts, have the other person disconnect the negative (-) jumper cable from the frame and then disconnect the positive (+) jumper cable (Figure 98).

Drive System Maintenance

Checking the Oil Level for the Stakedown Planetary Drive

Service Interval: After the first 100 hours—Check the stakedown planetary-drive oil level (Also, check if external leakage is observed).

Every 500 hours—Check the stakedown planetary-drive oil level (Also, check if external leakage is observed).

Oil specification: SAE 85W-140 API classification level GL4

Planetary-drive oil capacity: approximately 1.2 L (2.5 US pt)

Toro Premium Gear Oil is available from an Authorized Toro Service Dealer. See the parts catalog for part numbers.

1. Check the oil level on the sight-glass on each stakedown planetary drive (Figure 99).

   Note: The oil level should cover half of the sight-glass.

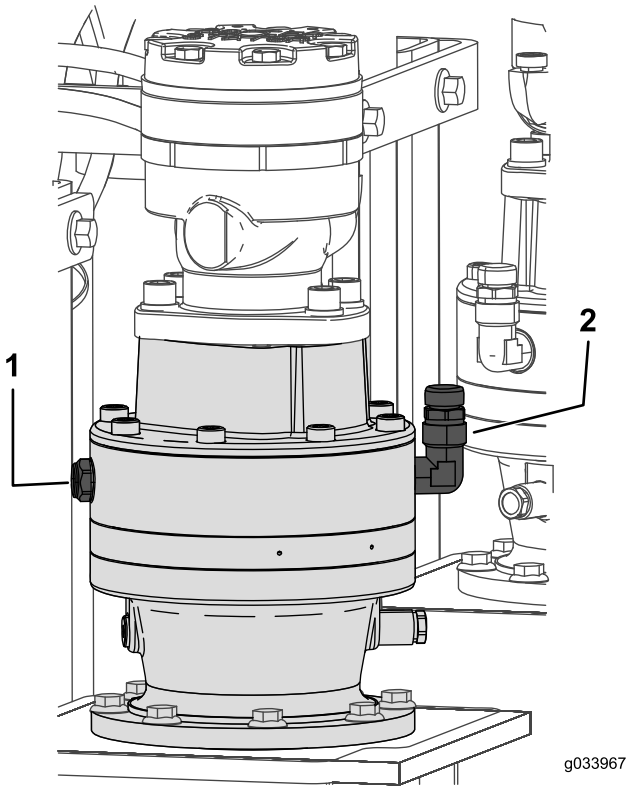

Figure 99

1. Sight-glass
2. Breather cap

2. Remove the breather cap and add the oil into the planetary drive until the oil level on the sight-glass is at least half full (Figure 99).
3. Repeat for the other stakedown planetary.

Checking the Oil Level for the Tracks Planetary Drive

Service Interval: Every 50 hours—Check the tracks rotary motor planetary-drive oil level (Also, check if external leakage is observed).

Oil specification: SAE 85W-140 API classification level GL4

Planetary-drive oil capacity: approximately 1.4 L (1.5 US pt)

Toro Premium Gear Oil is available from an Authorized Toro Service Dealer. See the parts catalog for part numbers.

1. Park the machine on a level surface, stop the engine, and remove the ignition key.
2. Clean the area around the oil-level plug with a cleaning solvent (Figure 100).

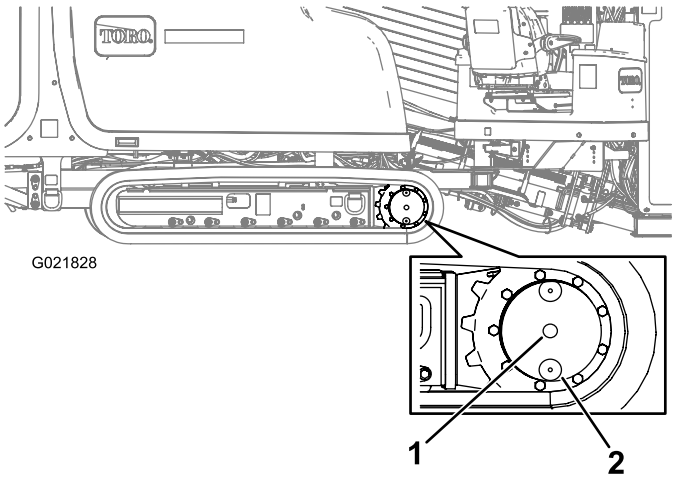

Figure 100

1. Oil-level plug
2. Oil-drain plug (6 o'clock position)

3. Remove the oil-level plug (Figure 100).

   Note: The oil level is correct when it is up to the bottom of the oil-level plug hole.
4. If the oil is below the bottom of the hole, add the specified oil until the oil is level with the bottom of the hole.
5. Install and tighten the oil-level plug.

Changing the Oil for the Tracks Planetary Drive

Service Interval: After the first 250 hours—Change the planetary-drive oil.

Every 800 hours—Change the planetary-drive oil (or yearly, whichever comes first).

Note: Change the oil when it is warm, if possible.

1. Park the machine on a level surface.
2. Clean the area around the oil-level plug (Figure 100).
3. Rotate the planetary drive until the oil-drain plug is directly below the oil-level plug (Figure 100).
4. Stop the engine and remove the key.
5. Place a drain pan under the oil-drain plug.
6. Remove the oil-level plug and the oil-drain plug.
7. Install the oil-drain plug.
8. Fill the chain drive planetary with oil until the oil is even with the bottom of the oil-level plug hole.
9. Install the oil-level plug.
10. Repeat steps 1 through 9 to change the planetary-drive oil on the other side of the machine.

Checking the Oil Level for the Rotary Motor Planetary Drive

Service Interval: After the first 100 hours—Check the rotary motor planetary-drive oil level (Also, check if external leakage is observed).

Every 500 hours—Check the rotary motor planetary-drive oil level (Also, check if external leakage is observed).

Oil specification: SAE 85W-140 API classification level GL4

Planetary-drive oil capacity: approximately 0.24 L (0.5 US pt)

Toro Premium Gear Oil is available from an Authorized Toro Service Dealer. See the parts catalog for part numbers.

1. Park the machine on a level surface, stop the engine, and remove the ignition key.
2. Check the oil level on the sight-glass on the rotary motor planetary drive (Figure 101).

   Note: The oil level should be 3/4 full in the sight-glass.

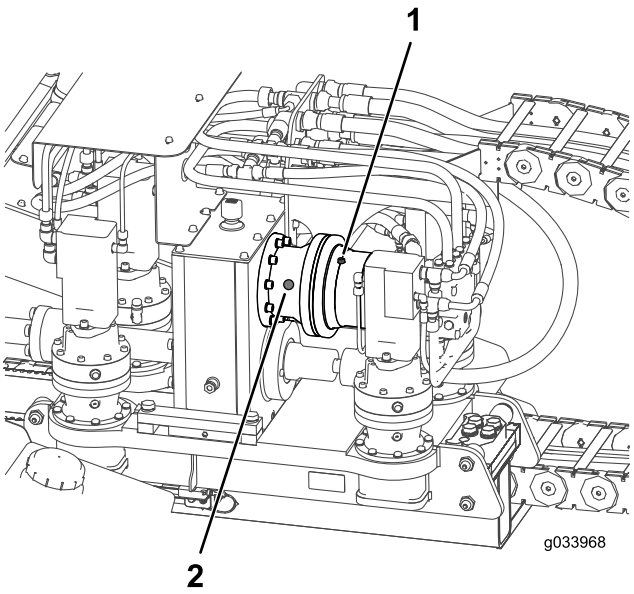

Figure 101

1. Rotary motor oil cap
2. Sight-glass

3. If the oil level is low, remove the oil-level plug (Figure 101).
4. Install and tighten the oil-level plug.

Checking the Oil for the Thrust Motor Planetary Drive

Service Interval: After the first 100 hours—Check the thrust motor planetary-drive oil.

Every 500 hours—Check the thrust motor planetary-drive oil (or yearly, whichever comes first).

Oil specification: SAE 85W-140 API classification level GL4

Planetary-drive oil capacity: approximately 0.24 L (0.5 US pt)

1. Park the machine on a level surface, stop the engine, and remove the ignition key.
2. Check the oil level on the sight-glass on each thrust motor planetary drive (Figure 103).

   Note: The oil level should cover half of the sight-glass.

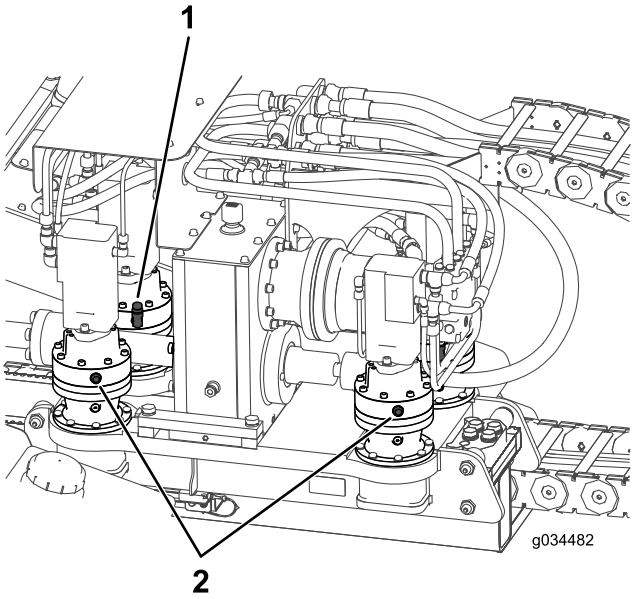

Figure 102

1. Breather cap
2. Sight-glass

3. Remove the breather cap and add the oil into the planetary drive until the oil level on the sight-glass is at least half full (Figure 103).
4. Repeat for all 4 thrust motor planetary drives.

Checking the Oil for the Gearbox Drive

Service Interval: After the first 100 hours—Check the gearbox drive oil.

Every 500 hours—Check the gearbox drive oil (or yearly, whichever comes first).

Oil specification: SAE 85W-140 API classification level GL4

Planetary-drive oil capacity: approximately 2.7 L (5.75 US pt)

1. Park the machine on a level surface, stop the engine, and remove the ignition key.
2. Check the oil level on the sight-glass on the gearbox drive (Figure 103).

   Note: The oil level should cover half of the sight-glass.

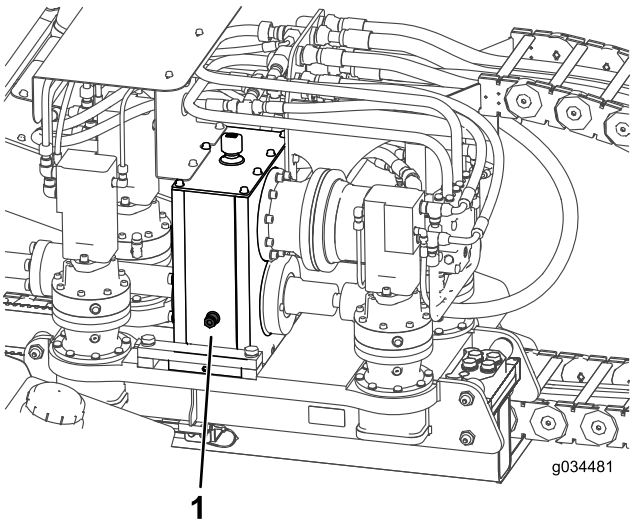

Figure 103

1. Sight-glass

3. Remove the breather cap and add the oil into the gearbox drive until the oil level on the sight-glass is at least half full (Figure 103).

Changing the Oil for the Gearbox Drive

Service Interval: After the first 100 hours—Change the gearbox-drive oil.

Every 500 hours—Change the gearbox-drive oil (or yearly, whichever comes first).

Note: Change the oil when it is warm, if possible.

1. Park the machine on a level surface and move the carriage all the way to the rear stop.

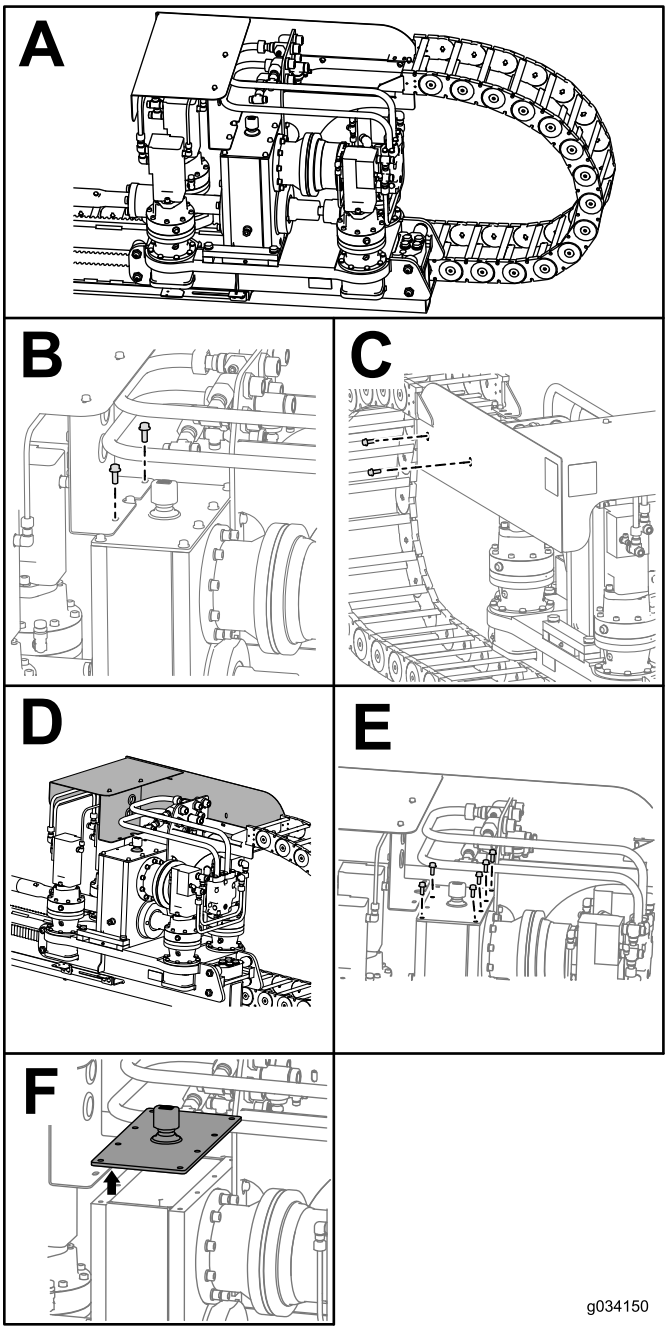

Figure 104

2. Stop the engine and remove the ignition key.

3. Remove the 2 bolts and nuts on the carriage guard (Box B of Figure 104).
4. Remove the 2 bolts and nuts on the side of the carriage guard (Box C of Figure 104).
5. Slide the carriage guard forward (Box D of Figure 104).
6. Remove the 6 bolts on the gearbox (Box E of Figure 104).
7. Remove the cover on the gearbox and syphon the oil out (Box F of Figure 104).
8. Fill the gearbox with oil until the oil level in the sight glass is more than half full (Figure 103).
9. Clean the sealant off of the gearbox box and cover (Figure 105).

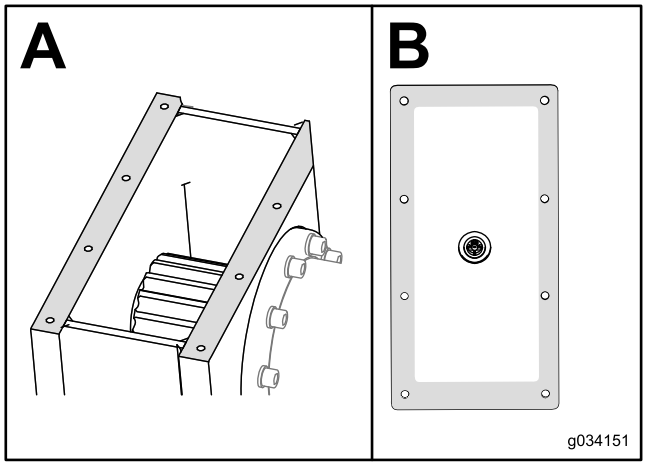

Figure 105

10. Put new automotive-grade RTV sealant around the edge of the cover (Box B of Figure 105).
11. Slide the cover back onto the gearbox and loosely install the 6 bolts (Box E of Figure 104).
12. Place the carriage guard back into place and loosely install the 2 bolts (Box C of Figure 104).
13. Install the 2 bolts securing the carriage guard onto the gearbox (Box B of Figure 104).
14. Tighten the 6 bolts on the gearbox and the 2 bolts on the side of the carriage guard.

Servicing the Tracks

Service Interval: Before each use or daily—Check the track tension.

⚠ WARNING

Grease in the hydraulic track is highly pressurized; ensure that the track-tension grease valve is not loosened more than 1 revolution at a time.

If you remove the track-tension grease valve (found in the hydraulic-track tensioner) or loosen it too much, grease can be released and may cause serious injury or death.

Tightening the Track Tension

If the track seems loose, tighten the track tension as follows:

1. Park the machine on a level surface, stop the engine, and remove the ignition key.
2. Remove dirt and debris found around the track-tension grease valve (Figure 106).

   Important: Ensure that the area surrounding the track-tension grease valve is clean before beginning to adjust the track tension.
3. Remove the retaining bolts and cover that house the track-tension grease valve.
4. Apply grease to the fitting until the tension reaches 31,026 kPa (4,500 psi) as shown in Figure 106.

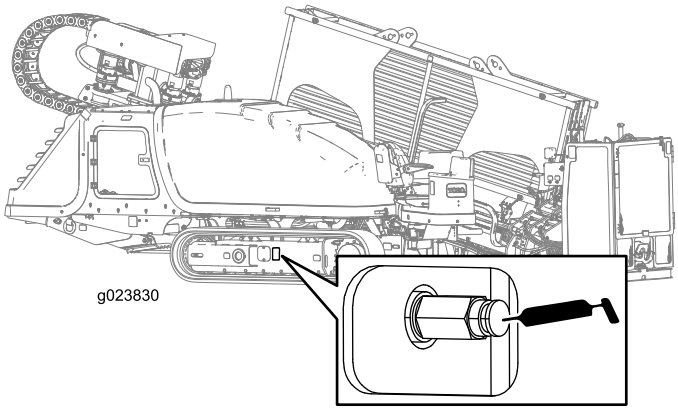

Figure 106
Track-tension grease valve shown

5. Remove excess grease from around the valve.
6. Install the cover and retaining bolts.
7. Repeat steps 2 through 6 to tighten the track tension on the other side.

Loosening the Track Tension

If the track seems tight, loosen the track tension as follows:

1. Park the machine on a level surface, stop the engine, and remove the ignition key.
2. Remove dirt and debris found around the track-tension grease valve (Figure 106).

   Important: Ensure that the entire area surrounding the track-tension grease valve is clean before beginning to adjust the track tension.
3. Remove the retaining bolts and the cover that house the track-tension grease valve.
4. Turn the track-tension grease valve counterclockwise **no more than 1 revolution** (Figure 106).

   Note: A 1-revolution turn will release grease and loosen the track.
5. When the tension reaches 31,026 kPa (4,500 psi), turn the track-tension grease valve clockwise to tighten it.
6. Remove excess grease from around the valve.
7. Install the cover and retaining bolts.
8. Repeat steps 2 through 7 to loosen the track tension on the other side.

Cooling System Maintenance

Coolant specification: 50/50 solution of ethylene-glycol antifreeze and water or equivalent

Engine and Radiator coolant capacity: 16.8 L (17.7 US qt)

⚠ WARNING

If you remove the radiator cap from a hot engine, hot coolant could spray, causing scalding.

- **Wear face protection when opening the radiator cap.**
- **Allow the cooling system to cool down to below 50°C (120°F) before removing the radiator cap.**
- **Follow the instructions for checking and maintaining the engine cooling system.**

⚠ WARNING

Coolant is toxic.

- **Keep coolant away from children and pets.**
- **If you are not using the same coolant again, dispose of it according to local environmental regulations.**

Checking the Coolant Level in the Radiator

Service Interval: Before each use or daily

⚠ WARNING

If the engine has been running, the radiator will be pressurized and the coolant inside will be hot. If you remove the cap, coolant may spray out, causing severe burns.

Do not remove the radiator cap when the engine is hot. Allow the engine to cool for at least 15 minutes or until the radiator cap is cool enough to touch without burning your hand.

Note: The cooling system is filled with a 50/50 solution of water and ethylene-glycol antifreeze.

1. Park the machine on a level surface, stop the engine, and remove the ignition key.
2. Allow the engine to cool.
3. Open the rear-access door; refer to Opening the Rear-Access Door (page 65).
4. Check the coolant level by looking at the sight gauge at the end of the radiator tank (Figure 107).

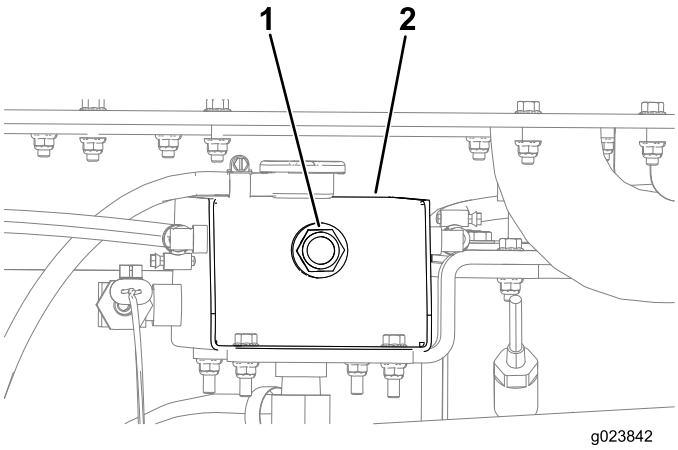

Figure 107

1. Coolant tank sight gauge 2. End of the radiator tank

- If the coolant level is low, add coolant until the level is up to the bottom of the filler neck; refer to Filling the System with Coolant (page 87).

  Important: Do not overfill the radiator.

- If the coolant level is normal, close the rear-access door.

Checking the Condition of Cooling-System Components

Service Interval: Every 300 hours/Yearly (whichever comes first)

Check the condition of the cooling system for leaks, damage, dirt, and loose hoses and clamps. Clean, repair, tighten, and replace the components as necessary.

Checking the Concentration of the Coolant

Service Interval: Every 1,000 hours/Yearly (whichever comes first)—Check the concentration of the coolant before the winter season.

Test the concentration of ethylene glycol-based antifreeze in the coolant. Ensure that the coolant has a 50% ethylene glycol and 50% water mixture or equivalent.

Note: A 50% ethylene glycol and 50% water mixture will protect the engine to -37° C (-34° F) throughout the year.

Using a concentration tester, check the concentration of the coolant mixture to ensure that it is 50% ethylene glycol and 50% water or equivalent; refer to the manufacturer's instructions for testing.

Cleaning the Cooling System

Service Interval: Every 1,000 hours/Yearly (whichever comes first) (Clean the cooling system if the coolant becomes dirty or rust colored.)

Draining the Coolant from the System

Important: Do not pour coolant onto the ground or into an unapproved container that can leak.

1. Park the machine on a level surface, stop the engine, and remove the ignition key.
2. Allow the engine to cool.
3. Open the rear-access door.

   Note: Look to the left when you open the rear-access door, and you will find the drain plug tucked away in the back-left corner.
4. Place a drain pan under the drain plug (Figure 108).

   Note: The coolant capacity of both the engine and the radiator is 16.8 L (17.7 US qt).

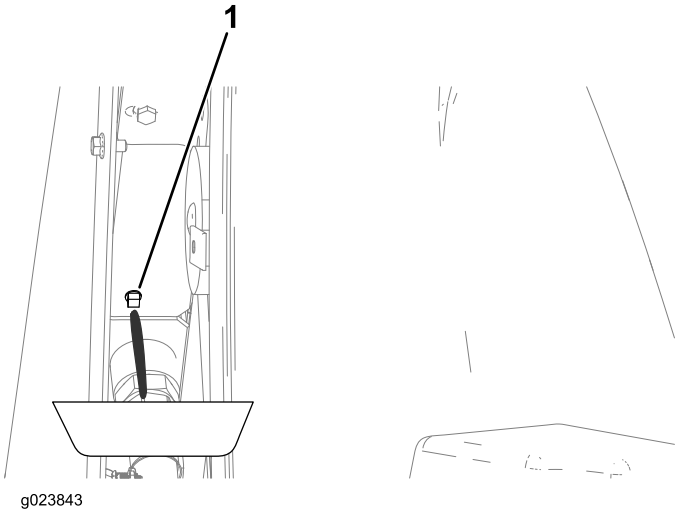

Figure 108

1. Radiator drain plug

5. Open the drain plug for the radiator and allow the coolant system to drain completely.

   Note: Dispose of the used coolant properly according to local codes.
6. Clean the threads on the drain plug and apply 3 layers of PTFE sealing tape.
7. Close the drain plug (Figure 108).

Flushing the Cooling System

Engine and radiator coolant capacity: 16.8 L (17.7 US qt)

1. Park the machine on a level surface, stop the engine, and remove the ignition key.
2. Condition the cooling system as follows:
   A. Ensure that the coolant is drained from the radiator and that the drain plug is closed; refer to Draining the Coolant from the System (page 86).
   B. Add a cooling system cleaning solution to the to the radiator through the filler neck (Figure 109).

      Note: Use cleaning solution of 21 g (12 oz dry) of sodium carbonate for every 17 L (18 US qt) of water; otherwise, use a commercially available equivalent. Follow the directions that come with the cleaning solution.

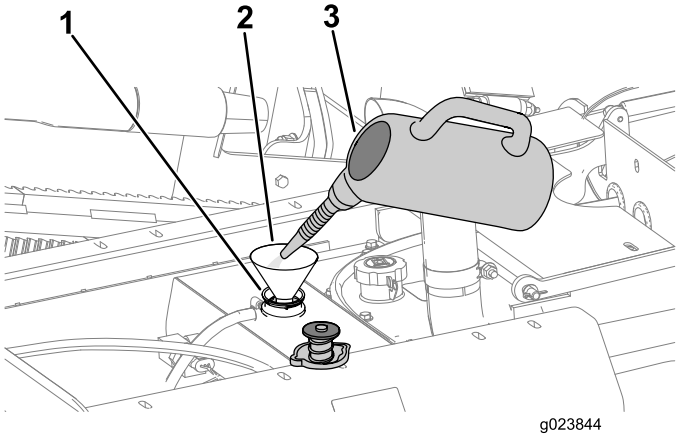

Figure 109

1. Filler neck (radiator)
2. Funnel
3. Coolant-system cleaning solution

   C. Close the drain plug (Figure 108).

      Important: Do not install the radiator cap.
   D. Operate the engine for 5 minutes or until the coolant temperature indicates 82° C (180° F), and then stop the engine.

      ⚠ CAUTION

      The cleaning solution is hot and can cause burns.

      Stay away from the discharge end of the coolant drain plug.
   E. Open the drain plug for the radiator, and drain the cleaning solution into a drain pan.
   F. Clean the threads on the drain plug and apply 3 layers of PTFE sealing tape.
   G. Close the drain plug.
3. Flush the cooling system as follows:

A. Open the filler-neck cap.

B. Fill the radiator with clean water (Figure 110).

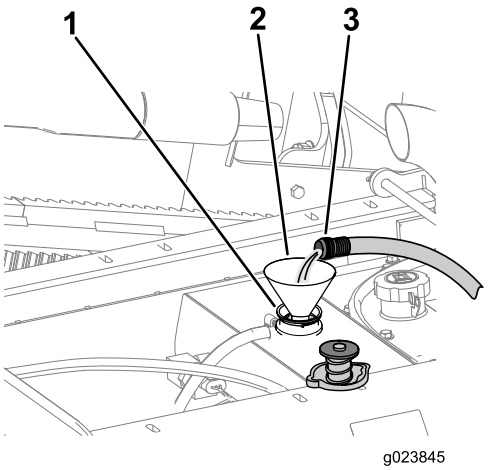

Figure 110

1. Filler neck
2. Funnel
3. Clean water

C. Close the filler-neck cap.

D. Operate the engine for 5 minutes or until the coolant temperature indicates 82°C (180°F), and then stop the engine.

⚠ CAUTION

The water is hot and can cause burns.

Stay away from the discharge end of the coolant drain plug.

E. Open the drain plug and drain the water into a drain pan.

F. Clean the threads on the drain plug and apply 3 layers of PTFE sealing tape.

G. If the water drained from the radiator is dirty, perform steps 3-A through 3-E until the water drained from the radiator is clean.

H. Close the drain plug (Figure 108).

Filling the System with Coolant

Important: You must fill the cooling system properly to prevent air locks in the cooling passages. Failing to vent the cooling system properly can severely damage the cooling system and engine.

Important: Use a mixture of 50% ethylene glycol and 50% water mixture or equivalent in the machine. The lowest ambient operating temperature for this mixture is above -37° C (-34° F). If the ambient temperature is lower, adjust the mixture. Use a mixture of ethylene glycol and water or equivalent in the machine all year.

1. Park the machine on a level surface, stop the engine, and remove the ignition key.
2. Remove the bolts from the coolant-access cover between the front hood and the rear cover.

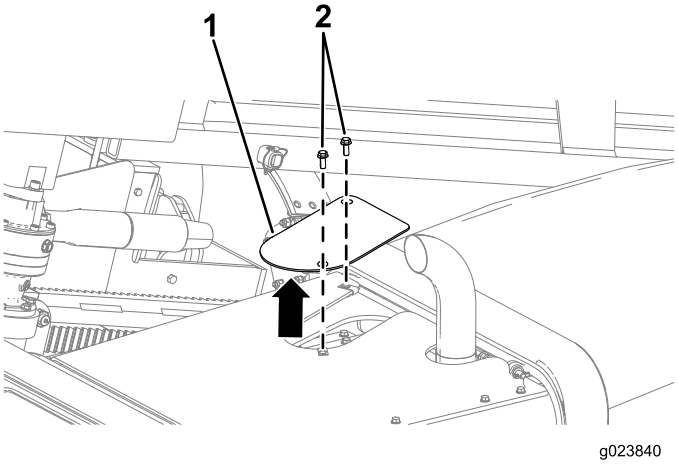

Figure 111

1. Coolant-access cover
2. Bolts

3. Remove the radiator cap (Figure 112).

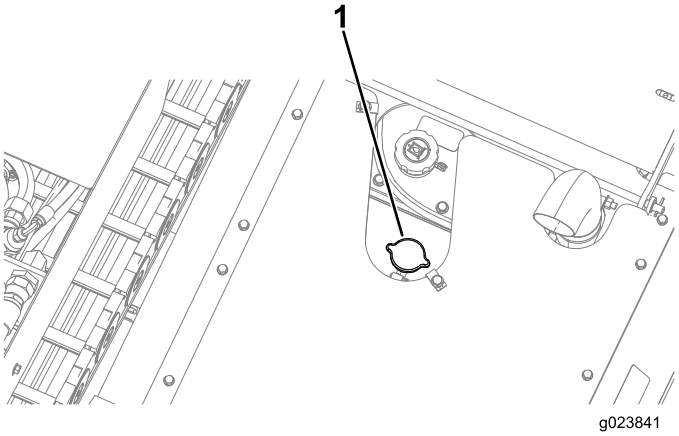

Figure 112

1. Radiator cap

4. Fill the radiator with coolant until the fluid level is up to the bottom of the filler neck (Figure 113).

   Note: The coolant capacity of both the engine and the radiator is 16.8 L (17.7 US qt).

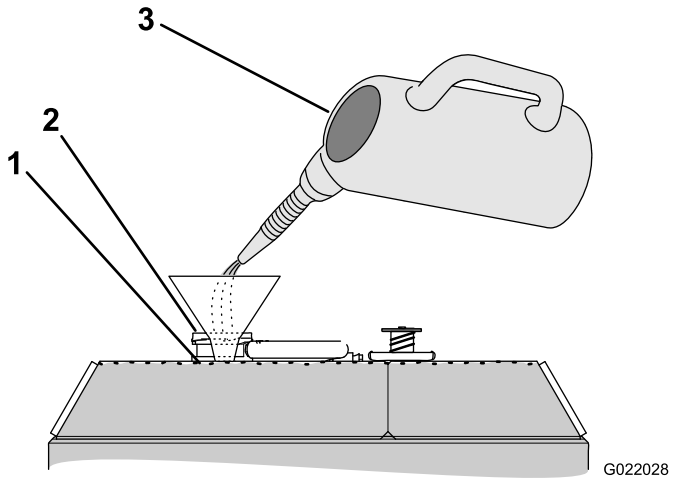

Figure 113

1. Coolant level (at the bottom of the filler neck)
2. Filler neck
3. Coolant (50/50 ethylene glycol and water or equivalent)

5. Install the radiator filler cap, ensuring that it is tightly sealed (Figure 112).
6. Start the engine and run it at half throttle for 5 minutes.
7. Stop the engine and remove the key.
8. Wait 30 minutes, then check the fluid level in the radiator sight gauge; refer to Checking the Coolant Level in the Radiator (page 85).

   Note: If it is low, add coolant.

Belt Maintenance

Servicing the Engine-Drive Belt

⚠ WARNING

Contacting a rotating belt can cause serious injury or death.

Stop the engine and remove the ignition key before working near belts.

Checking the Condition of the Belt

Service Interval: Every 250 hours

1. Park the machine on a level surface, stop the engine, and remove the ignition key.
2. Open the front hood.
3. Inspect the belt for cuts, cracks, loose cords, grease, oil, twisting, or signs of abnormal wear (Figure 114).

   Note: Replace the belt if it is excessively worn or damaged.

Checking the Tension of the Belt

Service Interval: Every 1,000 hours

1. Park the machine on a level surface, stop the engine, and remove the ignition key.
2. Open the front hood.
3. Align a straight edge over the drive belt and across the pulleys as shown in Figure 114.

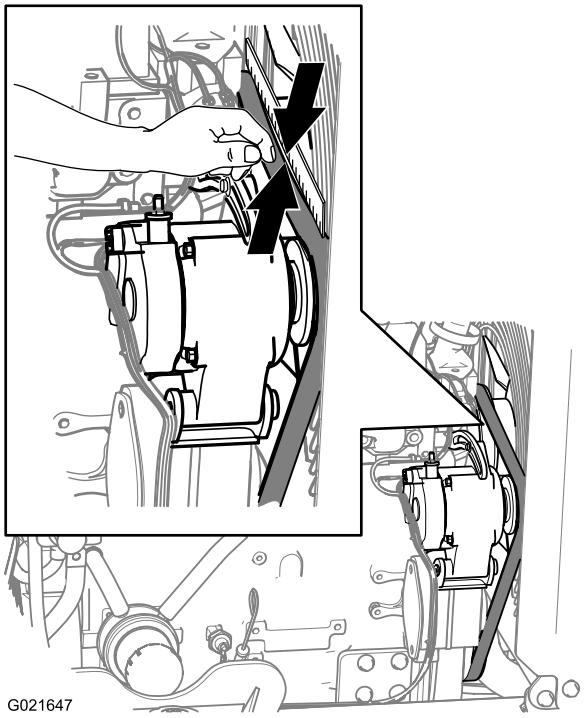

Figure 114

4. Press the belt down at the midway point between the fan pulley and the alternator pulley as shown in Figure 114.

   Note: The range of belt deflection between the straight edge and the belt should be 7 to 9 mm (9/32 to 11/32 in), under a load of 10 kg (22 lb).

5. If the tension of the belt is above or below the specified range, adjust the drive belt tension; refer to Adjusting the Tension of the Belt (page 89).

Adjusting the Tension of the Belt

1. Park the machine on a level surface, stop the engine, and remove the ignition key.
2. Open the front hood.
3. Loosen the nut and bolt at the pivot point for the alternator (Figure 115).

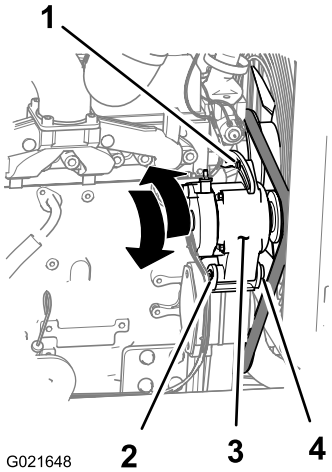

Figure 115

1. Adjustment bolt
2. Nut (alternator pivot point)
3. Alternator
4. Bolt (alternator pivot point)

4. Loosen the adjustment bolt on the alternator (Figure 115).
5. Move the alternator away from the engine to increase the belt tension; move the alternator toward the engine to decrease the belt tension (Figure 115).
6. Tighten the alternator adjustment bolt (Figure 115).
7. Check the tension of the belt; refer to Checking the Tension of the Belt (page 89).
8. If the belt tension is correct, tighten the nut and bolt at the pivot point for the alternator (Figure 115); otherwise, repeat steps 4 through 7.

Hydraulic System Maintenance

Servicing the Hydraulic Fluid

The hydraulic reservoir is filled at the factory with approximately 170 L (45 US gallons) of high-quality hydraulic fluid. **Check the level of the hydraulic fluid before the engine is first started and daily thereafter.** The recommended replacement fluid as follows:

Toro Premium All Season Hydraulic Fluid (Available in 5 gallon pails or 55 gallon drums. Contact your Authorized Toro Dealer for part numbers.)

Alternate fluids: If the Toro fluid is not available, other fluids may be used provided they meet all the following material properties and industry specifications. We do not recommend the use of synthetic fluid. Consult with your lubricant dealer to identify a satisfactory product.

Note: Toro will not assume responsibility for damage caused by improper substitutions, so use only products from reputable manufacturers who will stand behind their recommendation.

High Viscosity Index/Low Pour Point Anti-wear Hydraulic Fluid, ISO VG 46

Material Properties:

Viscosity, ASTM D445	42.2 cSt at 40° C (104° F) 7.8 cSt at 100° C (212° F)
Viscosity Index ASTM D2270	158
Pour Point, ASTM D97	-6° C (-42° F)
Industry Specifications:	Vickers I-286-S (Quality Level), Vickers M-2950-S (Quality Level), Denison HF-0

Note: Many hydraulic fluids are almost colorless, making it difficult to spot leaks. A red dye additive for the hydraulic system oil is available in 20 mL (2/3 oz) bottles. One bottle is sufficient for 15-22 L (4-6 gal) of hydraulic oil. Order hydraulic oil from your Authorized Toro Dealer.

Note: If ambient operating temperatures exceed 43° C (110° F), contact Toro for fluid recommendations.

Checking the Hydraulic Fluid

Service Interval: Before each use or daily

Check the hydraulic fluid as follows:

1. Park the machine on a level surface, stop the engine, and remove the ignition key.
2. Wait 10 minutes to allow the engine to cool and the hydraulic oil to stabilize.
3. Open the rear-access door.
4. Look at the sight gauge on the hydraulic tank and check the level of the oil (Figure 116).

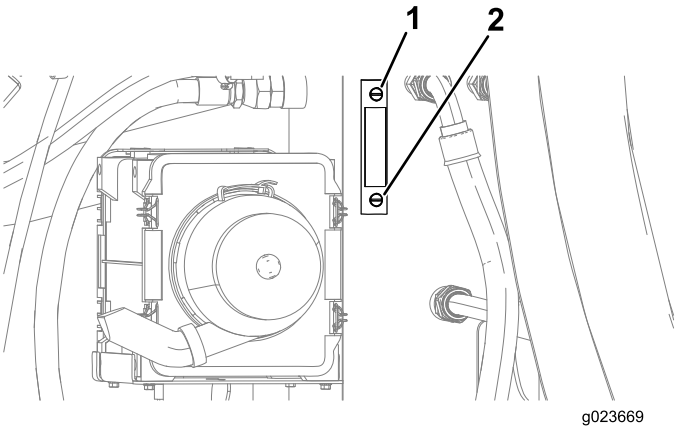

Figure 116

1. Full oil level
2. Low oil level

5. If the level is low, open the hydraulic-tank cap (Figure 117), add a small amount of oil and wait 2 minutes for the oil level to stabilize in the sight gauge (Figure 116).

   Note: The oil level is between 1/2 to 2/3 full in the sight gauge when the oil is at ambient temperature or if the engine has not yet been started for the day.

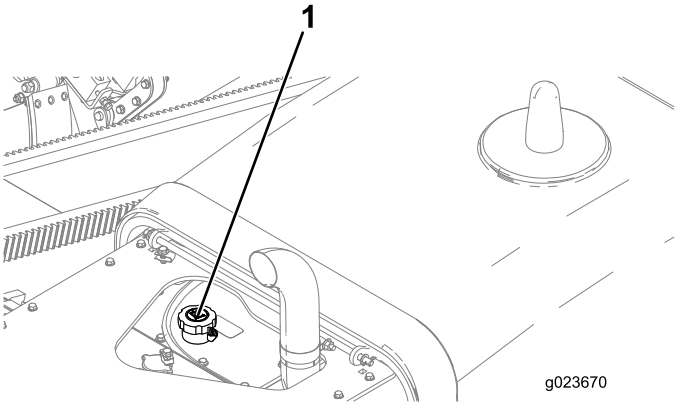

Figure 117

1. Hydraulic-tank cap

6. Continue to add the appropriate fluid in small increments until it reaches Full on the sight gauge.
7. Install cap onto the filler neck.

Changing the Hydraulic Fluid

Service Interval: Every 1,000 hours/Yearly (whichever comes first)

Important: If the fluid becomes contaminated, contact your Authorized Toro Dealer, because the system must be flushed. Contaminated fluid looks milky or black when compared to clean oil.

Important: Use of any other filter may void the warranty on some components.

1. Park the machine on a level surface, stop the engine, and remove the ignition key.
2. Open the rear-access door.
3. Raise the machine using proper equipment.

⚠ WARNING

Raising the unit relying solely on mechanical or hydraulic jacks could be dangerous. The mechanical or hydraulic jacks may not be enough support or may malfunction allowing the unit to fall, which could cause injury or death.

***Do not* rely solely on mechanical or hydraulic jacks for support.**

Use adequate jack stands or equivalent support.

4. Place a large draining container under the hydraulic fluid tank.
5. Remove the drain plug from the bottom of the tank.
6. Clean the threads on the drain plug and apply 3 layers of PTFE sealing tape.
7. Drain the hydraulic fluid flow into the container.

   Important: The capacity of the hydraulic-fluid tank is 170 L (45 US gal), so ensure that you have a container of at least 182 L (48 US gal) to drain the fluid into.
8. Install the drain plug when the hydraulic fluid stops draining.
9. Fill the reservoir with hydraulic fluid.

   Important: Use only the hydraulic fluids specified. Other fluids could cause system damage.
10. Install the reservoir cap.
11. Start the engine and use all of the hydraulic controls to distribute hydraulic fluid throughout the system.
12. Check for leaks, then stop the engine.
13. Check the fluid level and add enough to raise level the level to the Full mark on the dipstick.

    Note: Do not overfill.

Changing the Hydrostatic-Charge Filter

Service Interval: Every 500 hours/Every 6 months (whichever comes first)

1. Park the machine on a level surface, stop the engine, and remove the ignition key.
2. Open the front hood.
3. Align a drain pan or several rags under the hydrostatic-charge filter (Figure 118).

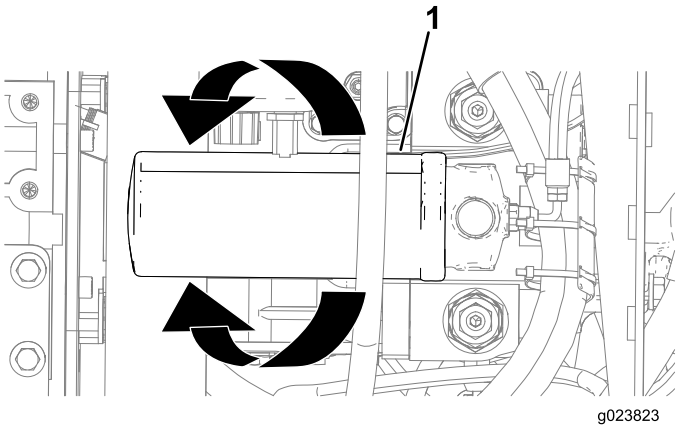

Figure 118

1. Hydrostatic-charge filter

4. Rotate the hydrostatic-charge filter counterclockwise and remove the filter (Figure 118).

   Note: Discard the hydrostatic-charge filter.
5. Using a clean rag, wipe clean the surface where the hydrostatic-charge filter seats with a clean rag.
6. Align the hydrostatic-charge filter to where it seats, and rotate it clockwise until the seal of the filter contacts the adapter (Figure 118).

Changing the High-Pressure Hydraulic Filter

Service Interval: Every 1,000 hours

⚠ WARNING

Ensure that the engine is in the OFF position before removing the high-pressure hydraulic filter. The high-pressure hydraulic filter contains very high pressure that could cause serious injury, or cause damage to the machine if released while the engine is running.

1. Park the machine on a level surface, stop the engine, and remove the ignition key.
2. Open the front hood.
3. Align a drain pan or several rags under the charge filter (Figure 119).

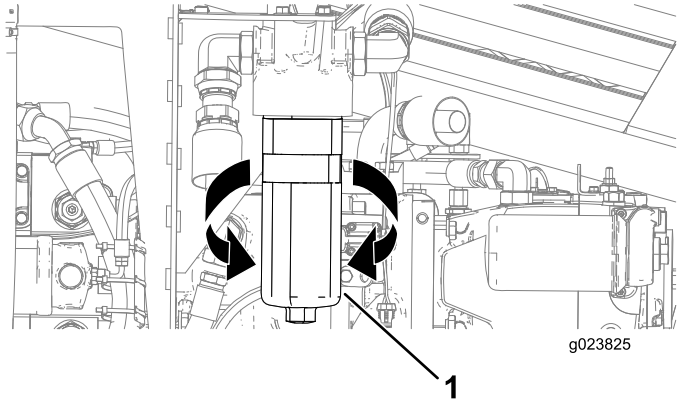

Figure 119

1. High-pressure hydraulic filter

4. Rotate the high-pressure hydraulic filter counterclockwise and remove the filter (Figure 119).
5. Using a clean rag, wipe clean the surface where the high-pressure hydraulic filter seats with a clean rag.
6. Align the high-pressure hydraulic filter to where it seats, and rotate it clockwise until the torque reaches 61 N-m (45 ft-lb) as shown in Figure 119.

Changing the Hydraulic-Return Filter

Service Interval: Every 1,000 hours

1. Park the machine on a level surface, stop the engine, and remove the ignition key.
2. Open the rear-access door.
3. Align a drain pan or several rags under the charge filter (Figure 120).

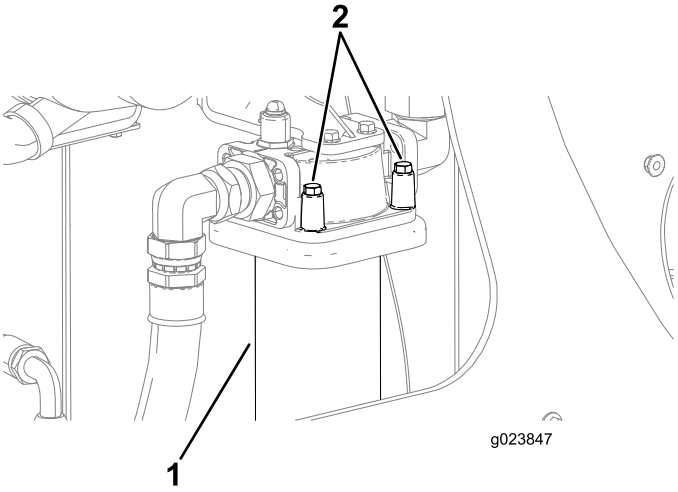

Figure 120

Front-side bolts shown

1. Hydraulic-return filter
2. Bolts

4. With one hand under the hydraulic-return filter, remove the 4 bolts as shown in Figure 120.

   Note: There are 2 other bolts on the back side that need to be removed.
5. Pull down and remove the filter.
6. Using a clean rag, wipe clean the surface where the hydraulic-return filter seats with a clean rag.
7. Align the new hydraulic return filter to where it seats, and tighten the 4 bolts (Figure 120).

Checking the Hydraulic Lines and Hoses

Service Interval: Every 2 years—Replace moving hoses.

Inspect the hydraulic lines and hoses daily for leaks, kinked lines, loose mounting supports, wear, loose fittings, weather deterioration, and chemical deterioration. Make all necessary repairs before operating.

⚠ WARNING

Hydraulic fluid escaping under pressure can penetrate skin and cause injury.

- **Make sure that all hydraulic fluid hoses and lines are in good condition and all hydraulic connections and fittings are tight before applying pressure to the hydraulic system.**
- **Keep your body and hands away from pin hole leaks or nozzles that eject high-pressure hydraulic fluid.**
- **Use cardboard or paper to find hydraulic leaks.**
- **Safely relieve all pressure in the hydraulic system before performing any work on the hydraulic system.**
- **Seek immediate medical attention if fluid is injected into skin.**

Checking the Hydraulic System Test Ports

The test ports are used to test the pressure in the hydraulic circuits. Contact your Authorized Toro Dealer for assistance.

Drilling-Fluid Pump Maintenance

Servicing the Drilling-Fluid-Pump Oil

The drilling-fluid pump is shipped with oil in the crankcase; however, check the oil level before and after you first start the engine.

The crankcase capacity is 3.8 L (4 US qt).

Use only high-quality engine oil that meets the following specifications:

- **API Classification Level Required:** CH-4, CI-4 or higher
- **Oil:**SAE 80W-90, non-detergent oil above 0° C (32° F)

Toro Premium Engine Oil is available from your dealer. See the parts catalog for part numbers. Also, refer to the *Engine Operator's Manual*, included with the machine, for further recommendations.

Checking the Drilling-Fluid-Pump Oil Level

Service Interval: Before each use or daily—Check the drilling-fluid pump oil level.

1. Park the machine on a level surface, stop the engine, and remove the ignition key.
2. Remove the oil-level plug on the crankcase (Figure 121).
   - If oil drains from the oil-level hole, insert the oil-level plug.

     Note: The oil level is sufficient if oil drains from the opening, or is at least at the level of the oil-level plug.
   - If oil does not drain from the oil-level, or is not at the level of the oil-level plug, insert the oil-level plug, and open the oil-filler cap to add the specified oil.

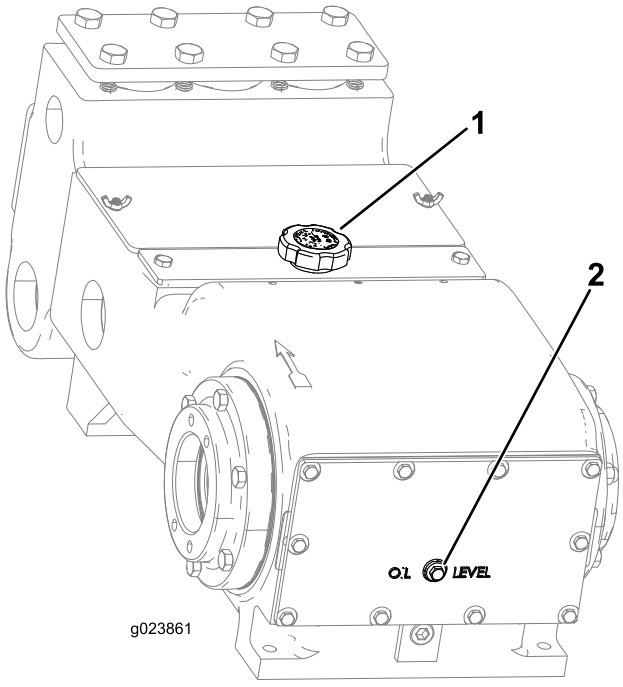

Figure 121

1. Oil-filler cap
2. Oil-level plug

3. Ensure that the oil is at the oil-fill line as shown in Figure 121.

   Note: If the oil is below the oil-fill line, refer to step 8 of Changing the Drilling-Fluid-Pump Oil (page 94) and add the necessary amount of oil.

Changing the Drilling-Fluid-Pump Oil

Service Interval: Every 500 hours—Change the drilling-fluid pump oil.

1. Park the machine on a level surface, stop the engine, and remove the ignition key.
2. Allow the engine to cool.
3. Lower the thrust frame, and ensure that the cylinder lock is installed; refer to Installing the Cylinder Lock (page 66).
4. Remove the drain plug and place a drain pan under the drain-plug hole (Figure 122).

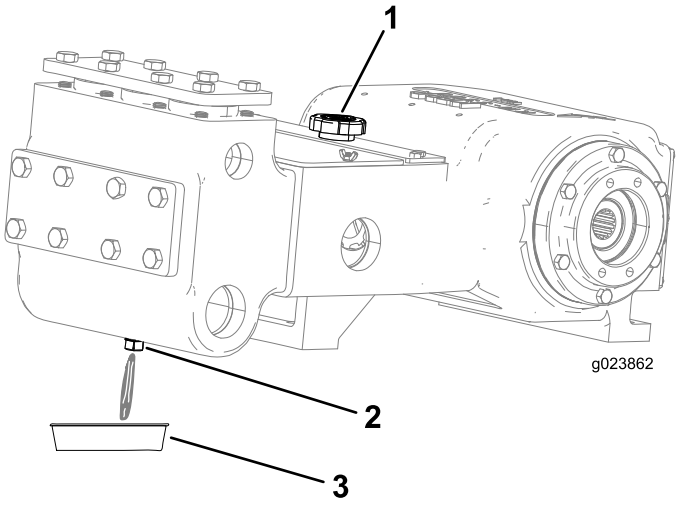

Figure 122

1. Oil-filler cap
2. Drain plug
3. Drain pan

5. Clean the threads on the drain plug and apply 3 layers of PTFE sealing tape.
6. Allow all of the oil to drain from drain plug into the oil pan (Figure 122).
7. Install the drain plug.
8. Remove the oil-filler cap (Figure 122) and add approximately 1.8 L (4 US qt) of oil, or until the oil reaches the level of the oil-level plug as shown in Figure 121.

Changing the Drilling-Fluid-Pump, Charge Filter

1. Park the machine on a level surface, stop the engine, and remove the ignition key.
2. Open the front hood.
3. Align a drain pan or several rags under the charge filter (Figure 123).

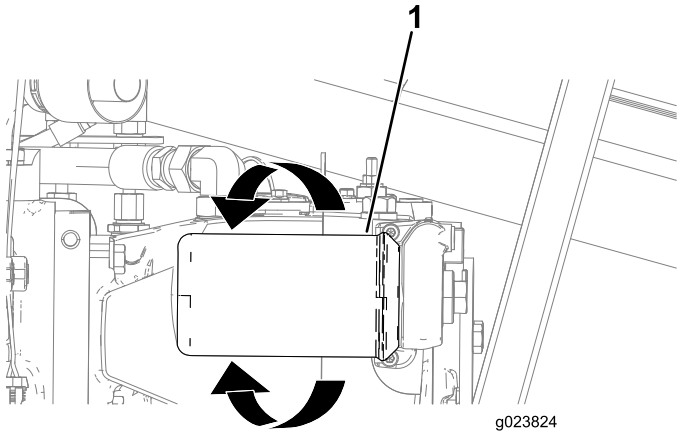

Figure 123

1. Charge filter

4. Rotate the charge filter counterclockwise and remove the filter (Figure 123).

   Note: Discard the charge filter.
5. Using a clean rag, wipe clean the surface where the charge filter seats with a clean rag.
6. Align the charge filter to where it seats, and rotate it clockwise until the seal of the filter contacts the adapter (Figure 123).

Preparing the Drilling-Fluid System for Cold Weather

Prepare the machine as follows after drilling if the temperature will be below 0° C (32° F).

1. Park the machine on a level surface, stop the engine, and remove the ignition key.
2. Prepare the machine to circulate the antifreeze as follows:

   A. Place a drain pan under the drill spindle for the leaked antifreeze (Figure 124).

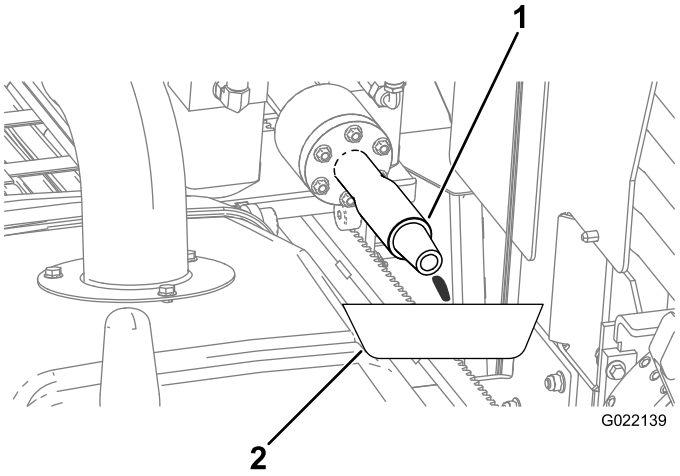

Figure 124

1. Drill spindle
2. Drain pan

   B. Ensure that the cap is installed on the drilling-fluid pump inlet (Figure 125).

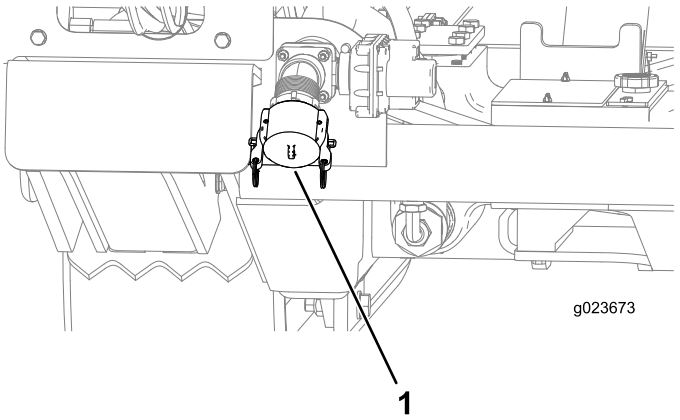

Figure 125

1. Drilling-fluid pump inlet

   C. Remove the cap from the antifreeze tank for the drilling-fluid pump (Figure 126).

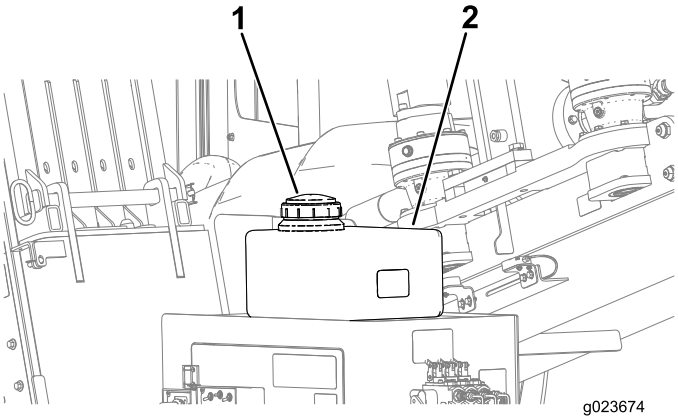

Figure 126

1. Antifreeze-tank cap
2. Antifreeze tank

D. Ensure that the tank is full of antifreeze (Figure 126).

3. Circulate the antifreeze as follows:

A. Open the antifreeze valve inside of the rear compartment (Figure 127).

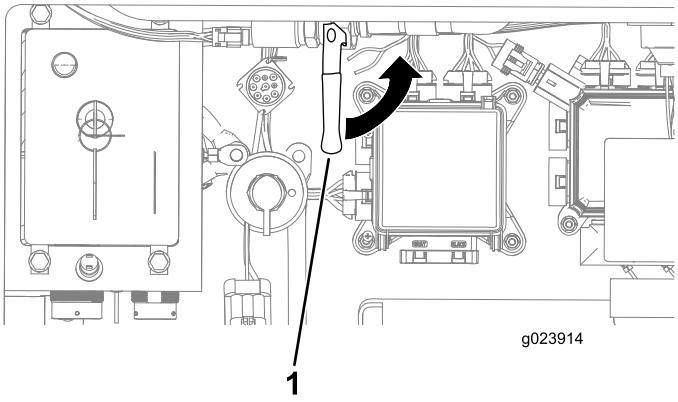

Figure 127

1. Antifreeze valve

B. Open the valve near the rear compartment (Figure 128).

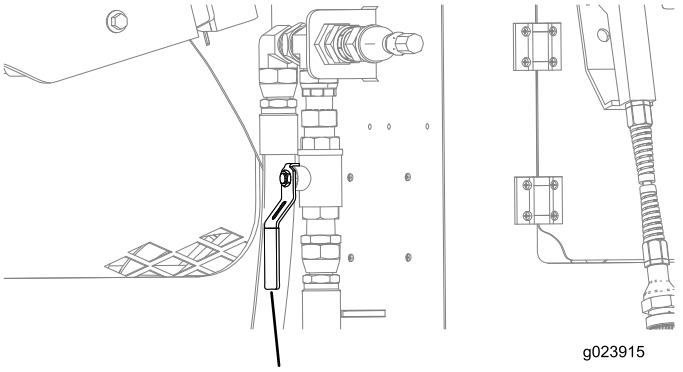

Figure 128

1. Valve (open position)

C. Start the machine and turn On the drilling-fluid pump.

D. Add antifreeze to the tank as needed (Figure 126).

E. When the antifreeze comes out of the drill spindle (Figure 124), turn the pump off.

4. Turn the machine off.
5. Install the cap onto the antifreeze tank (Figure 126).
6. Close the antifreeze valve (Figure 127).

Cab Maintenance

Changing the Cab Air Filter

1. Open the cab door; refer to Opening the Door (Model with Cab only) (page 61).
2. Park the machine on a level surface, stop the engine, and remove the ignition key.
3. Remove the screw and the cover that house the air filter (Figure 129).

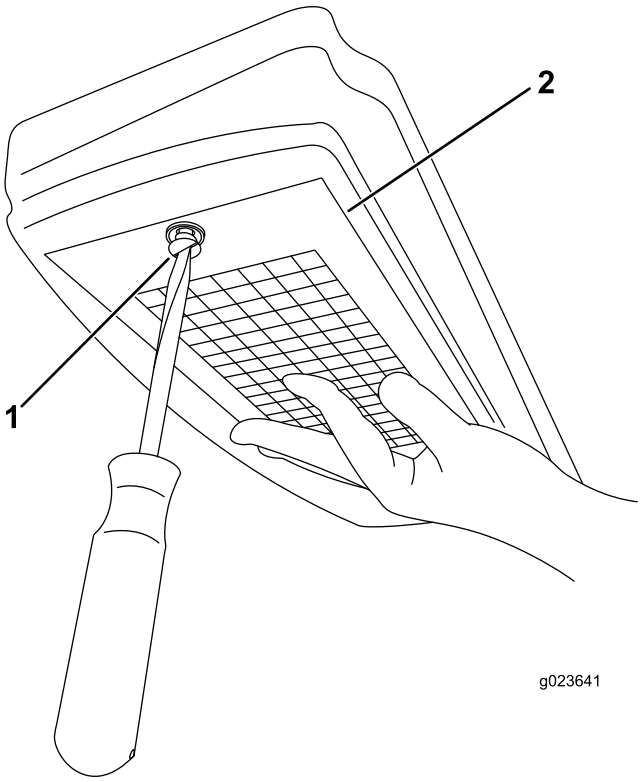

Figure 129

1. Screw
2. Air-filter cover

4. Remove the air filter from the housing, and replace the filter element (Figure 130).

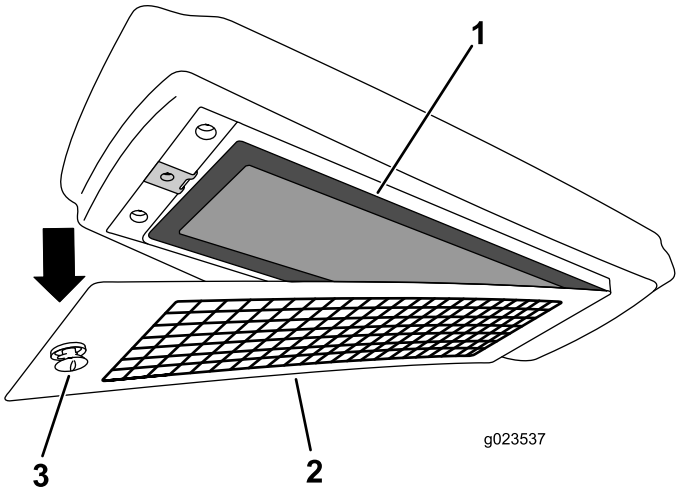

Figure 130

1. Air filter
2. Air-filter cover
3. Screw

Filling the Windshield-Washer Fluid Tank

1. Open the cab door; refer to Opening the Door (Model with Cab only) (page 61).
2. Open the cap of the windshield-washer-fluid tank (Figure 131).

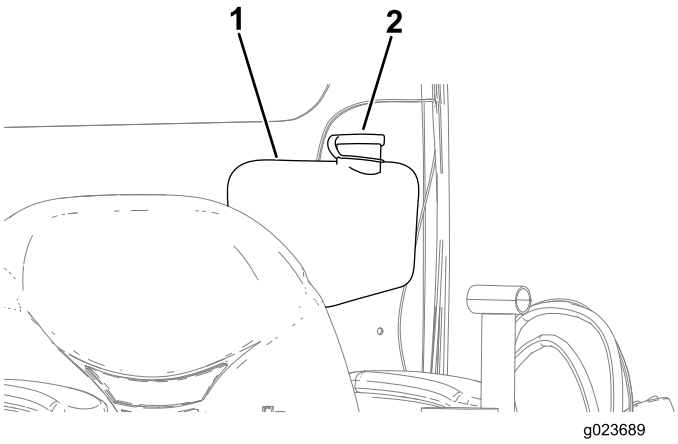

Figure 131

1. Windshield-washer-fluid tank
2. Windshield washer fluid-tank cap

3. Fill the windshield-washer-fluid tank until it is full (Figure 131).
4. Close the windshield-washer-fluid-tank cap (Figure 131).

Cleaning

Cleaning with the Spray-Hose Attachment

Service Interval: Before each use or daily

The machine comes with a spray-hose attachment that you can use to clean the machine and pipes.

Important: Do not spray any electronic component of the machine and ensure that the hood is down before cleaning the machine with the spray-hose attachment.

Important: If the outside temperature is below freezing, refer to Preparing the Drilling-Fluid System for Cold Weather (page 95) before cleaning the machine.

To use the spray-hose attachment, perform the following procedure:

1. Park the machine on a level surface.
2. Using the right joystick, turn the drilling-fluid pump to the OFF position; refer to Lower Button (page 28) in Right Joystick—Mode I (page 28).
3. Ensure that there is a clean water source to attach to the drilling-fluid pump.
4. Ensure that the valve near the rear compartment is in the CLOSED position (Figure 132).

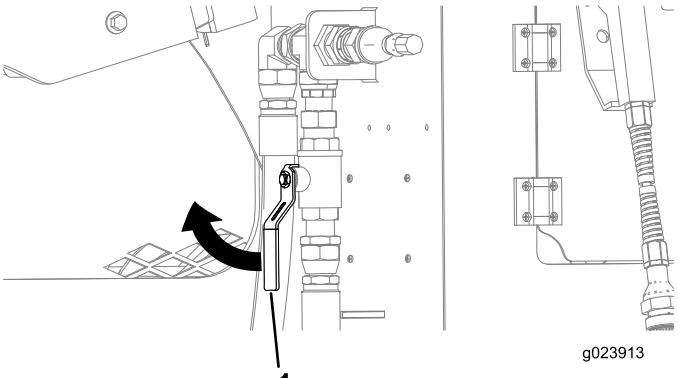

Figure 132

1. Valve

5. Connect the spray-hose attachment to the fitting (Figure 133).

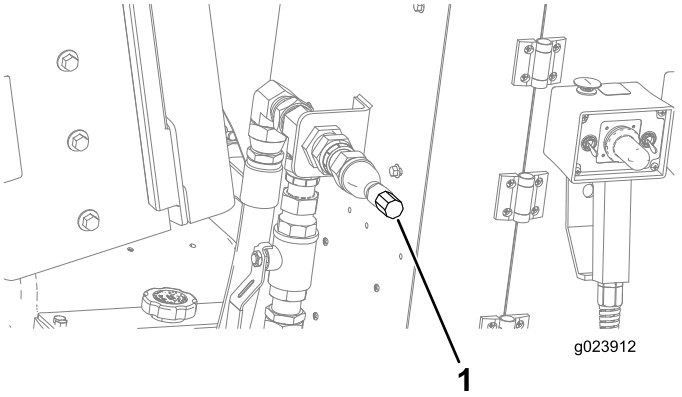

Figure 133

1. Fitting for the spray-hose attachment

6. Using the right joystick, turn the drilling-fluid pump to the ON position; refer to Lower Button (page 28) in Right Joystick—Mode I (page 28).
7. Adjust the drilling-fluid flow rate using the toggle switch to change the desired water pressure.

   Note: Refer to Toggle Switch (page 28) in Right Joystick—Mode I (page 28) to increase the drilling-fluid flow rate.

   Note: Refer to Toggle Switch (page 29) in Right Joystick—Mode II (page 29) to decrease the drilling-fluid flow rate.
8. Using the spray-hose attachment, hold down the lever and spray down the machine and pipes.

Cleaning Plastic and Resin Parts

Avoid using gasoline, kerosene, paint thinner, etc., when cleaning plastic windows, the console, the instrument cluster, the monitor, gauges, etc. Use only water, mild soap, and a soft cloth when you clean these parts.

Using gasoline, kerosene, paint thinner, etc., to clean a plastic or resin part will cause it to discolor, crack, or deform.

Storage

1. Stop the engine and remove the key.
2. Remove dirt and grime from the entire machine; refer to Cleaning with the Spray-Hose Attachment (page 98).
3. Service the air cleaner; refer to Servicing the Air-Cleaning System (page 69).
4. Grease the machine; refer to Greasing the Machine (page 67).
5. Charge the battery; refer to Charging the Battery (page 78).
6. Check and adjust the track tension; refer to Servicing the Tracks (page 83).
7. Check the coolant before winter storage; refer to Checking the Cooling System (page 47).
8. Prepare the drilling-fluid pump for cold weather; refer to Preparing the Drilling-Fluid System for Cold Weather (page 95).
9. Check and tighten all bolts, nuts, and screws. Repair or replace any part that is damaged.
10. Paint all scratched or bare metal surfaces. Paint is available from your Authorized Service Dealer.
11. Store the machine in a clean, dry garage or storage area. Remove the key from the ignition switch and keep it in a memorable place.
12. Cover the machine to protect it and keep it clean.

Troubleshooting

Problem	Possible Cause	Corrective Action
The starter does not crank.	1. The BATTERY-DISCONNECT switch is in the OFF position.	1. Turn the BATTERY-DISCONNECT switch to the ON position.
	2. The electrical connections are corroded or loose.	2. Check the electrical connections for good contact.
	3. A fuse is blown or loose.	3. Correct or replace the fuse.
	4. The battery is discharged.	4. Charge the battery or replace it.
	5. The relay or switch is damaged.	5. Contact your Authorized Service Dealer.
	6. A starter or starter solenoid is damaged.	6. Contact your Authorized Service Dealer.
	7. The internal engine components have seized.	7. Contact your Authorized Service Dealer.
The engine cranks, but does not start.	1. An incorrect starting procedure was used.	1. Refer to Starting and Stopping the Engine.
	2. The fuel tank is empty.	2. Fill the tank with fresh fuel.
	3. The fuel shut-off valve is closed.	3. Open the fuel shut-off valve.
	4. Dirt, water, stale fuel, or incorrect fuel is in the fuel system.	4. Drain and flush the fuel system, then add fresh fuel.
	5. The fuel line is clogged.	5. Clean or replace the fuel line.
	6. There is air in the fuel.	6. Bleed the nozzles and check for air leaks at the fuel hose connections and fittings between the fuel tank and the engine.
	7. The glow plugs are inoperative.	7. Check the fuse, glow plugs, and wiring.
	8. The cranking speed is slow.	8. Check the battery, oil viscosity, and starting motor (contact your Authorized Service Dealer).
	9. The air cleaner filters are dirty.	9. Service the air filters.
	10. The fuel filter is clogged.	10. Replace the fuel filter.
	11. The fuel grade is improper for cold weather use.	11. Drain the fuel system and replace the fuel filter. Add fresh fuel of the proper grade for ambient temperature conditions. You may need to warm the entire machine.
	12. There is low compression.	12. Contact your Authorized Service Dealer.
	13. The injection nozzles or pump are malfunctioning.	13. Contact your Authorized Service Dealer.
	14. The ETR solenoid is broken.	14. Contact your Authorized Service Dealer.

Problem	Possible Cause	Corrective Action
The engine starts, but does not keep running.	1. The fuel tank vent is restricted.	1. Loosen the cap. If the engine runs with the cap loosened, replace the cap.
	2. Dirt or water is in the fuel system.	2. Drain and flush the fuel system; add fresh fuel.
	3. The fuel filter is clogged.	3. Replace the fuel filter.
	4. There is air in the fuel.	4. Bleed the nozzles and check for air leaks at fuel hose connections and fittings between the fuel tank and engine.
	5. The fuel grade is improper for cold weather use.	5. Drain the fuel system and replace the fuel filter. Add fresh fuel of proper grade for ambient temperature conditions.
	6. The spark arrestor screen is clogged.	6. Clean or replace the spark arrestor screen.
	7. The fuel pump is damaged.	7. Contact your Authorized Service Dealer.
The engine runs, but knocks or misses.	1. Dirt, water, stale fuel, or incorrect fuel is in the fuel system.	1. Drain and flush the fuel system; add fresh fuel.
	2. There is air in the fuel.	2. Bleed nozzles and check for air leaks at the fuel hose connections and fittings between the fuel tank and engine.
	3. The injection nozzles are damaged.	3. Contact your Authorized Service Dealer.
	4. There is low compression.	4. Contact your Authorized Service Dealer.
	5. The injection pump timing is incorrect.	5. Contact your Authorized Service Dealer.
	6. There is excessive carbon buildup.	6. Contact your Authorized Service Dealer.
	7. There is internal wear or damage.	7. Contact your Authorized Service Dealer.
The engine does not idle.	1. The fuel tank vent is restricted.	1. Loosen the cap. If the engine runs with the cap loosened, replace the cap.
	2. Dirt, water, stale fuel, or incorrect fuel is in the fuel system.	2. Drain and flush the fuel system; add fresh fuel.
	3. The air cleaner filters are dirty.	3. Service the air filters.
	4. The fuel filter is clogged.	4. Replace the fuel filter.
	5. There is air in the fuel.	5. Bleed the nozzles and check for air leaks at fuel hose connections and fittings between the fuel tank and engine.
	6. The fuel pump is damaged.	6. Contact your Authorized Service Dealer.
	7. There is low compression.	7. Contact your Authorized Service Dealer.

Problem	Possible Cause	Corrective Action
The engine overheats.	1. More coolant is needed. 2. There is restricted air flow to the radiator. 3. The crankcase oil level is incorrect. 4. There is excessive loading. 5. The incorrect fuel is in the fuel system. 6. The thermostat is damaged. 7. The fan belt is loose or broken. 8. Injection timing is incorrect. 9. The coolant pump is damaged.	1. Check and add coolant. 2. Inspect and clean the side panel screens with every use. 3. Fill or drain to the full mark. 4. Reduce the load and use a lower ground speed. 5. Drain and flush the fuel system; add fresh fuel. 6. Contact your Authorized Service Dealer. 7. Contact your Authorized Service Dealer. 8. Contact your Authorized Service Dealer. 9. Contact your Authorized Service Dealer.
There is excessive black smoke in the exhaust.	1. There is excessive loading. 2. The air cleaner filters are dirty. 3. Incorrect fuel is in the fuel system. 4. The injection pump timing is incorrect. 5. The injection pump is damaged. 6. The injection nozzles are damaged.	1. Reduce the load and use a lower ground speed. 2. Service the air filters. 3. Drain the fuel system and refill with specified fuel. 4. Contact your Authorized Service Dealer. 5. Contact your Authorized Service Dealer. 6. Contact your Authorized Service Dealer.
There is excessive white smoke in the exhaust.	1. The engine temperature is low. 2. The glow plugs are inoperative. 3. The injection pump timing is incorrect. 4. The injection nozzles are damaged. 5. There is low compression.	1. Check the thermostat. 2. Check the fuse, glow plugs, and wiring. 3. Contact your Authorized Service Dealer. 4. Contact your Authorized Service Dealer. 5. Contact your Authorized Service Dealer.
The engine loses power.	1. The engine load is excessive. 2. The crankcase oil level is incorrect. 3. The air cleaner filters are dirty. 4. Dirt, water, stale fuel, or incorrect fuel is in the fuel system. 5. The spark arrestor screen is clogged. 6. There is air in the fuel. 7. There is low compression. 8. The fuel tank vent is restricted. 9. The injection pump timing is incorrect. 10. The injection pump is damaged.	1. Reduce ground speed. 2. Fill or drain to the full mark. 3. Service the air filters. 4. Drain and flush the fuel system; add fresh fuel. 5. Clean or replace the spark arrestor screen. 6. Bleed the nozzles and check for air leaks at fuel hose connections and fittings between the fuel tank and engine. 7. Contact your Authorized Service Dealer. 8. Contact your Authorized Service Dealer. 9. Contact your Authorized Service Dealer. 10. Contact your Authorized Service Dealer.

Index

811 ..... 4, 35–36

A

Accessories 34
Adding drill pipes 54
Adding fuel 45
Air conditioning the cab 62
Air filter
  Cab
    Changing 97
Air-cleaning system
  Checking the air-cleaner indicator 70
  Cleaning the dust valve 71
  Cover latch 70
  Installing the cover 71
  Removing the cover 70
  Servicing 99
  Servicing the air-cleaner cover 70
  Servicing the filters 70
Antifreeze tank
  Drilling-fluid system 96
Attachments 34
Auto-drill-speed controls 26–27

B

Backreaming 56
Battery
  Charging 99
  Disconnect switch 47
  Jump-starting 78
  Safety 7, 77
  Servicing 77
Battery-disconnect switch 47
Beginning-of-bore-at-depth point 38
Belt
  Engine-drive
    Adjusting tension 89
    Checking condition 88
    Checking tension 89
Bent blade 53
Bentonite clay 51
Biodiesel fuel
(See Fuel)
Bits
  Drill 53
Blade
  bent 53
  Straight 53
  Triangle point (rock) 53
Bleeding the fuel system
(See Priming the fuel system)
Bore
  Adding drill pipes 54
  Beginning-of, at-depth point 38
  Depth 38
  Depth table 38
  Drilling 51
  End-of, at-depth point 38
  Entry 38
    Determining 38
  Entry pitch 38
  Entry shaft 54
  Exit 38
  Exiting 56
  Horizontal shaft 55
  Mapping 42
  Marking and preparing 43
  Obstacles 38
  Planning 36, 38
  Starting the first pipe 51
  Steering 55
Boring the entry shaft 54
Breakout-wrench-control switch 33
Button
  Engine-start 25
  Engine-stop 25, 31, 79
  Front
    Left joystick 26–27
    Right joystick 28–29
  Lower
    Left joystick 26–27
    Right joystick 29, 98
  Rear
    Left joystick 26–27
    Right joystick 28–29

C

Cab
  Air filter
    Changing 97
  Airconditioning 62
  Heating 62
  Location 21, 23
  Opening the door 97
  Windshield wipers 62
  Windshield-washer fluid 62
Cam
(See Pipe cam)
Cam-rotation-control switch 33
Carbide step-wing cutter 56
Carriage
(See Drill carriage)
Carriage-control switch 33
Cast cone packer 56
Changing the cab air filter 97
Changing the high-pressure hydraulic filter 92
Changing the hydraulic-return filter 92
Changing the hydrostatic-charge filter 91
Charging the battery 99
Cleaning 98
Cleaning the crankcase-vent tube 69
Cold weather
  Preparation 99
Communication lines
  Safety precautions 7
Connecting the reamer and product 56
Control panel 25
  Location 21, 24
  Rear 30
Controls
  Auto-drill speed 26–27
  Drill frame 31
  Drill pendant 32
  Drilling fluid 28–29, 98
  Drive pendant 47
  Left joystick—Mode I 26
  Left joystick—Mode II 27
  Right joystick—Mode I 98
  Right joystick—Mode II 98
  Section contents 24
  Stabilizer 31
  Stake-down levers 34, 50
Coolant
  Capacity 84
  Checking the concentration 85
  Checking the level in the radiator 88
  Draining 86
  Filling 87
  Flushing 86
  Specification 84
Cooling system
  Checking the condition of components 85
  Cleaning 85
  Coolant concentration
    Checking 85
  Coolant level in the radiator
    Checking 88
  Draining 86
  Filling 87
  Flushing 86
Crystalline silica
  Safety precautions 36
Cylinder lock 66
  Installing 94
  Removing 66

D

Danger zone
  Drilling 6
  Driving 5
Decals 9
Deploying the Zap-alert system 49
Depth table 38
Determining the bore-entry point 38
Diesel fuel
(See Fuel)
  Safety 4
Directional Drilling
  Concept 43
Disabled machine
  Moving 60
Door
  Opening 85
  Rear-access
    Location 21
Draining the fuel tank 76
Draining water
  Fuel filter 74
  Fuel tank 76
Drill bits 53
Drill carriage
  Location 21, 23
  Pull rearward 28–29
  Thrust forward 28–29
Drill frame
  Controls 31
Drill head
  Installing 54
  Setup 53
  Steering 55
Drill pendant 32
Drill pipe
  Adding 54
  Loading into the pipe holder 45
  Removing 58
  Starting the first 51
  Wiper 57
Drill spindle
  Location 23
  Spin clockwise 27–28
  Spin counterclockwise 27–28

Drill-frame tilt lever 31
Drill-pendant receptacle 30, 32
Drill-spindle-control switch 33
Drilling 51
  Adding drill pipes 54
  Directional
    Concept 43
  Entry shaft 54
  Horizontal shaft 55
  Setting up 48
  Starting the first pipe 51
  Steering 55
Drilling danger zone 6
Drilling fluid
  Pump
    Changing the charge filter 95
    Changing the oil 94
    Checking the oil level 94
    Connecting to a fluid source 50
    Connecting to a natural water source 51
    Connecting to mixing system 51
    Servicing the oil 93
Drilling Fluid and Wrench-control switch 33
Drilling fluid controls 28–29, 98
Drilling safety 6
Drilling-fluid system
  Cold weather preparation 99
Drilling-fluid-pump inlet
  Location 22
Drive pendant 47
Drive-direction joystick 31
Drive/drill switch 25
Drive-pendant receptacle 30, 32, 47
Drive-speed switch 31–32
Driving danger zone 5
Driving the machine 47
Dust valve
  Cleaning 71

E

Electric strike alarm
(See Zap-Alert system)
Electrical lines
  Safety precautions 7, 36
Elevator
(See Pipe elevator)
End-of-bore-at-depth point 38
Engine
  Cooling system 84
  Drive belt
    Servicing 88
  Jump-starting 78
  Key Switch 30
  Oil
    Changing 73
    Checking the level 73
  Oil fliter
    Changing 73
  Servicing the Air-cleaning system 99
  Servicing the Oil and Filter 73
  Speed switch 25, 31
  Start button 25
  Starting 79
  Stop button 25, 31
  Stopping 79
  Valve clearance 73
  Vent tube
  (See Cleaning)
Engine-heating light 30
Entry pitch 38
Entry shaft
  Boring 54
Exit-side lockout
  Drill-enabled light 25
  Reciever 30
  Reset light 25
  Reset switch 25
  System 30
  Transmitter 30
Exiting the ground 56

F

Fiber-optic lines
  Safety precautions 7
Filter
  Air-cleaner 70
  Charge (for the drilling fluid pump)
    Changing 95
  Fuel
    Draining water 74
  High-pressure hydraulic
    Changing 92
  Hydraulic-return
    Changing 92
  Hydrosratic-charge
    Changing 91
Fluid
  Hydraulic
    Changing 91
    Checking 90
    Servicing 90
    Specifications 90
  Windshield-washer
    Dispersing 62
    Filling the tank 97
Fluid-pump switch 30
Flushing the cooling system 86
Fluted reamer 56
Frame
  Location 21, 23
Front button
  Left joystick 26–27
  Right joystick 28–29
Front hood
  Location 21
  Opening 76
Fuel
  Adding 45
  Checking lines and connections 76
  Filter
    Draining water 74
  Fuel filters
    Replacing 75
  Priming 75
  Safety 4
  Safety precautions 45
  Tank
    Draining and cleaning 76
    Draining water 76
  Tank capacity 45

G

Gas lines
  Safety precautions 7, 36
Gearbox drive
  Changing the oil 82
  Checking the oil 82
Greasing the machine 67
Gripper
(See Pipe gripper)
(See Piper gripper)
Ground-strike-reset switch 25
Grounding stake
  Storage 44

H

Hard hat 4
Hearing protection 4
Heating the cab 62
Height 34
High-pressure hydraulic filter
  Changing 92
Hood
  Front
    Location 21
  Opening 76
  Rear
    Location 21
Horizontal Directional Drilling
(See Directional Drilling)
Horizontal shaft
  Boring 55
Hydraulic fluid
  Changing 91
  Checking 90
  Servicing 90
  Specifications 90
Hydraulic system
  Lines and hoses
    Checking 93
  Test ports 93
Hydraulic-return filter
  Changing 92
Hydrostatic-charge filter
  Changing 91

I

Indicator
  Air-cleaner 70
Ingnition switch 30
Initial planning 36
Inspecting the job site 36
Installing the drill head 54

J

Job site
  Inspecting 36
  Preparation 43
Joystick
  Drive-direction 31
  Left
    Location 24
    Mode I 26
    Mode II 27
  Right
    Location 24
    Mode I 98
    Mode II 98
Jump-starting the machine 78

L

Labels
(See Decals)
Latch
  Operator-platform 24
Lead bar
  Installing 54
  Removing 57
Left joystick

Location 24
Mode I 26
Mode II 27
Left-stabilizer lever 31
Left-track-control switch 32
Length 34
Lever
Drill-frame tilt 31
Left-stabilizer 31
Right-stabilizer 31
Stake-down 34, 50
Life jacket pendant
(See Drill pendant)
Lifter
(See Pipe elevator)
Lifting the machine 60
Light
Drill-enabled
Exit-side lockout 25
Engine-heating 30
Exit-side-lockout 25
Receiver-battery-status 25
Reset
Exit-side lockout 25
Lights switch 25
Loading drill pipes 45
Loading the machine
Unloading the machine 47
Lower button
Left joystick 26–27
Lower Button
Right joystick 29, 98
Lower wrench
Close 26, 29
Location 23
Open 26, 29
Lubrication 67

M

Magazine
(See Pipe holder)
Maintenance 63
Battery 77
Belt 88
Cooling system 84
Drilling-fluid pump 93
Electrical system 77
Engine 69
Fuel system 74
Hydraulic system 90
Lubrication 67
Premaintenance procedures 65
Safety 7
Schedule 63
Tracks 99
Mapping the bore 42
Mixing system 51
Mode I
Left joystick 26
Right joystick 98
Mode II
Left joystick 27
Right joystick 98
Model and Serial Plate
Location 2
Model Number
Location 2
Monitor
Location 24
Moving a disabled machine 60
Moving the machine 47
Mud
(See Drilling fluid)

N

Noise information 8
Number
Model and Serial
Location 2

O

Obstacles 38
Oil
Changing 73
Checking the level 73
Drilling-fluid-pump 93
Engine 73
Gearbox drive
Changing 82
Checking 82
Planetary drive
Changing 80
Rotary motor planetary drive
Checking the level 81
Stakedown planetary drive
Checking the level 79
Thrust motor planetary drive
Checking 81
Tracks planetary drive
Checking the level 80
Oil Filter
Changing 73
One-Call System Directory 4, 35–36
Opening the cab door 97
Opening the front hood 76
Opening the rear-access door 85
Operation 35
Operator platform 24
Location 21
Operator seat
Location 21
Operator-platform latch 24
Operator-presence switch 31–32

P

Pedestrian safety bar
Lowering 48
Pendant
Drill 32
Drive 47
Pipe
Adding 54
Flexibility 38
Removing 58
Starting the first 51
Utility product
Connecting to a reamer 56
Wiper 57
Pipe cam
Rotate 26–27
Sensor-failure override 26–27
Pipe elevator
Lower 26, 29
Raise 26, 29
Pipe gripper
Close 26–27
Extend 26–27
Open 26–27
Retract 26–27
Pipe holder
Loading 45
Location 22
Pipe loader
Enable controls 26–27
Pipe magazine
(See Pipe holder)
Pipe wiper
Location 23
Pipe-clamp-control switch 33
Pipe-elevator-control switch 33
Pipe-grip-control switch 33
Pipes
Loading into the pipe holder 45
Pipr holder
Replacing 60
Pitch
Setting the thrust frame 50
Planetary drive
Changing the oil 80
Planning
Initial 36
Planning the bore path 38
Plate
Stake-down
Location 22
Platform
Operator 24
Latch 24
Preparation
Safety 4
Preparing for drilling 48
Preparing the job site and machine 43
Priming the fuel system 75
Product
Connecting to a reamer 56
Product overview illustration
Left side 22
Right side 21
Top view 23
Product safety decals 9
Pullback 56, 58
Pump
Drilling fluid
Connecting to a fluid source 50
Connecting to a natural water source 51
Connecting to mixing system 51
Drilling-fluid
Changing the charge filter 95
Changing the oil 94
Checking the oil level 94
Servicing the oil 93
Inlet
Location 22

R

Reamer
Carbide step-wing cutter 56
Cast cone packer 56
Connecting 56
Fluted 56
Removing 57
Rear button
Left joystick 26–27
Right joystick 28–29
Rear control panel 30
Rear hood
Location 21
Rear-access door
Location 21
Opening 85

Receiver-battery-status light 25
Receptacle
  Drill-pendant 30, 32
  Drive-pendant 30, 32, 47
Removing drill pipes 58
Removing the last pipe 57
Removing the reamer 57
Replacing the fuel filters 75
Replacing the pipe holder 60
Right joystick
  Location 24
  Mode I 98
  Mode II 98
Right-stabilizer lever 31
Right-track-control switch 33
Rock blade
(See Triangle point blade)
Rotary motor planetary drive
  Checking the oil level 81
  Oil specification and capacity 81
Rotary-control switch 32

S

Safe attire 4
Safety
  Battery 7, 77
  Clothing 4
  Communication lines 7
  Crystalline silica 36
  Decals 9
  Drilling 6
  Drilling danger zone 6
  Driving 5
  Driving danger zone 5
  Electrical lines 7, 36
  Fiber-optic lines 7
  Fuel 4, 45
  Gas lines 7, 36
  General 4
  Hard hat 4
  Hearing protection 4
  Maintenance 7
  Noise information 8
  Operation 4
  Preparation 4
  Safety glasses 4
  Storage 7
  Training 4
  Utility lines 35
  Water lines 7
  Zap-alert system
    Deploying 49
Safety Alert Symbol 2, 4
Safety bar
  Location 22
Safety glasses 4
Seat
  Location 21
Serial Number
  Location 2
Servicing the tracks 99
Setting up for drilling 48
Sonde 53
  Temperature 55
Sonde housing 53
Specifications 34
Spindle
(See Drill spindle)
Spray-hose attachment
  Cleaning with 98
Spreader bar
  Lifting the machine 60
Stabilizer
  Location 21–22
Stabilizer controls 31
Stabilizer levers 31
Stabilizers
  Lowering 50
Stake-down cage
  Location 22
Stake-down levers 34
Stake-down plate 50
  Location 22
Stakedown planetary drive
  Checking the oil level 79
  Oil specification and capacity 79
Starting the engine 79
Starting the first pipe 51
Stationary Pipe-clamp-control switch 33
Steering the drill head 55
Stopping the engine 79
Storage 99
  Safety 7
Straight blade 53
Switch
  Battery-disconnect 47
  Breakout-wrench-control 33
  Cam-rotation-control 33
  Carriage-control 33
  Drill-spindle-control 33
  Drilling Fluid and Wrench-control 33
  Drive/drill 25
  Drive-speed 31–32
  Engine, key 30
  Engine-speed 25, 31
  Fluid-pump 30
  Ground-strike-reset 25
  Left-track-control 32
  Lights 25
  Operator-presence 31–32
  Pipe-clamp-control 33
  Pipe-elevator-control 33
  Pipe-grip-control 33
  Reset
    Exit-side lockout 25
  Right-track-control 33
  Rotary-control 32
  Stationary Pipe-clamp-control 33
  Toggle
    Left joystick 26–27
    Right joystick 98
Symbol
  Safety Alert 2, 4

T

Temperature
  Sonde 55
Testing the Zap-alert system 43
Thread joint compound
  Applicator 58
  Applicator nozzle
    Adjusting 58
  Filling 59
  Spray volume
    Adjusting 59
Thread-joint compound
  Application controls 28–29
Thrust frame
  Location 21, 23
  Lowering 50
  Setting the pitch 50
Thrust motor planetary drive
  Checking the oil 81
Tie-down points 48
TJC
  Thread joint compound 58
Toggle switch
  Left joystick 26–27
  Right joystick 98
Track
  Location 21
Tracking system 53
Tracks
  Servicing 99
  Tension
    Loosening 83
    Tightening 83
Tracks planetary drive
  Checking the oil level 80
  Oil specification and capacity 80
Trailering the machine 47
Training
  Safety 4
Tramming
(See Driving the machine)
Transmitter
(See Sonde)
Transmitter-battery-status Light 25
Triangle point blade 53
Trigger
  Left joystick 26–27
  Right joystick 28–29
Troubleshooting 100

U

Upper wrench
  Close 26–27
  Location 23
  Open 26–27
  Rotate 26–27
Using the TJC applicator 58
Utility lines
  Connecting to a reamer 56
  Safety precautions 35
Utility Lines
  Marking
    811 ..... 4, 35–36
    Color codes (US and Canada) 6
    One-Call System Directory ... 4, 35–36

V

Valve clearance 73
Vent tube
  Cleaning 69
Vibration information 8

W

Water as drilling fluid 51
Water lines
  Safety precautions 7
Weight 34
Width 34
Windshield wiper
  Changing speed 62
Windshield-washer fluid
  Dispersing 62
  Filling the tank 97
Wiper
  Pipe 57
    Location 23
  Windshield 62

Wire
Connecting to a reamer 56
Wrench
Enable controls 26–27
Lower
Close 26, 29
Location 23
Open 26, 29
Upper
Close 26–27
Location 23
Open 26–27
Rotate 26–27

Z

Zap-alert system
Deploying 49
Grounding stake
Storage 44
Tester 43
Testing 43
Zap-Alert system 7, 36
Ground-strike-reset switch 25
Strobe
Location 21

Notes:

Notes:

Notes:

International Distributor List

Distributor:	Country:	Phone Number:	Distributor:	Country:	Phone Number:
Agrolanc Kft	Hungary	36 27 539 640	Maquiver S.A.	Colombia	57 1 236 4079
Balama Prima Engineering Equip.	Hong Kong	852 2155 2163	Maruyama Mfg. Co. Inc.	Japan	81 3 3252 2285
B-Ray Corporation	Korea	82 32 551 2076	Mountfield a.s.	Czech Republic	420 255 704 220
Casco Sales Company	Puerto Rico	787 788 8383	Mountfield a.s.	Slovakia	420 255 704 220
Ceres S.A.	Costa Rica	506 239 1138	Munditol S.A.	Argentina	54 11 4 821 9999
CSSC Turf Equipment (pvt) Ltd.	Sri Lanka	94 11 2746100	Norma Garden	Russia	7 495 411 61 20
Cyril Johnston & Co.	Northern Ireland	44 2890 813 121	Oslinger Turf Equipment SA	Ecuador	593 4 239 6970
Cyril Johnston & Co.	Republic of Ireland	44 2890 813 121	Oy Hako Ground and Garden Ab	Finland	358 987 00733
Equiver	Mexico	52 55 539 95444	Parkland Products Ltd.	New Zealand	64 3 34 93760
Femco S.A.	Guatemala	502 442 3277	Perfetto	Poland	48 61 8 208 416
ForGarder OU	Estonia	372 384 6060	Pratoverde SRL.	Italy	39 049 9128 128
G.Y.K. Company Ltd.	Japan	81 726 325 861	Prochaska & Cie	Austria	43 1 278 5100
Geomechaniki of Athens	Greece	30 10 935 0054	RT Cohen 2004 Ltd.	Israel	972 986 17979
Golf international Turizm	Turkey	90 216 336 5993	Riversa	Spain	34 9 52 83 7500
Guandong Golden Star	China	86 20 876 51338	Lely Turfcare	Denmark	45 66 109 200
Hako Ground and Garden	Sweden	46 35 10 0000	Solvert S.A.S.	France	33 1 30 81 77 00
Hako Ground and Garden	Norway	47 22 90 7760	Spypros Stavrinides Limited	Cyprus	357 22 434131
Hayter Limited (U.K.)	United Kingdom	44 1279 723 444	Surge Systems India Limited	India	91 1 292299901
Hydroturf Int. Co Dubai	United Arab Emirates	97 14 347 9479	T-Markt Logistics Ltd.	Hungary	36 26 525 500
Hydroturf Egypt LLC	Egypt	202 519 4308	Toro Australia	Australia	61 3 9580 7355
Irrimac	Portugal	351 21 238 8260	Toro Europe NV	Belgium	32 14 562 960
Irrigation Products Int'l Pvt Ltd.	India	0091 44 2449 4387	Valtech	Morocco	212 5 3766 3636
Jean Heybroek b.v.	Netherlands	31 30 639 4611	Victus Emak	Poland	48 61 823 8369

European Privacy Notice

The Information Toro Collects
Toro Warranty Company (Toro) respects your privacy. In order to process your warranty claim and contact you in the event of a product recall, we ask you to share certain personal information with us, either directly or through your local Toro company or dealer.

The Toro warranty system is hosted on servers located within the United States where privacy law may not provide the same protection as applies in your country.

BY SHARING YOUR PERSONAL INFORMATION WITH US, YOU ARE CONSENTING TO THE PROCESSING OF YOUR PERSONAL INFORMATION AS DESCRIBED IN THIS PRIVACY NOTICE.

The Way Toro Uses Information
Toro may use your personal information to process warranty claims, to contact you in the event of a product recall and for any other purpose which we tell you about. Toro may share your information with Toro's affiliates, dealers or other business partners in connection with any of these activities. We will not sell your personal information to any other company. We reserve the right to disclose personal information in order to comply with applicable laws and with requests by the appropriate authorities, to operate our systems properly or for our own protection or that of other users.

Retention of your Personal Information
We will keep your personal information as long as we need it for the purposes for which it was originally collected or for other legitimate purposes (such as regulatory compliance), or as required by applicable law.

Toro's Commitment to Security of Your Personal Information
We take reasonable precautions in order to protect the security of your personal information. We also take steps to maintain the accuracy and current status of personal information.

Access and Correction of your Personal Information
If you would like to review or correct your personal information, please contact us by email at legal@toro.com.

Australian Consumer Law

Australian customers will find details relating to the Australian Consumer Law either inside the box or at your local Toro Dealer.

The Toro Underground Warranty

A Limited Warranty

Underground Equipment

Conditions and Products Covered

The Toro Company and its affiliate, Toro Warranty Company, pursuant to an agreement between them, jointly warrant your Toro Underground Equipment ("Product") to be free from defects in materials or workmanship. Where a warrantable condition exists, we will repair the Product at no cost to you including diagnostics, labor, and parts.
The following warranty applies from the date the Product is delivered to the original retail purchaser or rental owner.

Products	Warranty Period
Engine Powered Units & Fluid Mixers	1 year or 1000 operating hours, whichever occurs first
All Serialized Attachments	1 year
Rock Hammer	6 months
Engines	Through engine manufacturers: 2 years or 2000 operating hours, whichever occurs first

Instructions for Obtaining Warranty Service

You are responsible for notifying the Underground Dealer from whom you purchased the Product as soon as you believe a warrantable condition exists. If you need help locating a Underground Dealer, or if you have questions regarding your warranty rights or responsibilities, you may contact us at:

Toro Customer Care
Toro Warranty Company
8111 Lyndale Avenue South
Bloomington, MN 55420-1196
Toll Free at 855-493-0088 (U.S. Customers)
1-952-948-4318 (International Customers)

Owner Responsibilities

As the Product owner, you are responsible for required maintenance and adjustments stated in your *Operator's Manual*. Failure to perform required maintenance and adjustments can be grounds for disallowing a warranty claim.

Items and Conditions Not Covered

Not all product failures or malfunctions that occur during the warranty period are defects in materials or workmanship. This warranty does not cover the following:

- Product failures which result from the use of non-Toro replacement parts, or from installation and use of add-on, or modified non-Toro branded accessories and products. A separate warranty may be provided by the manufacturer of these items.
- Product failures which result from failure to perform recommended maintenance and/or adjustments. Failure to properly maintain your Toro product per the Recommended Maintenance listed in the *Operator's Manual* can result in claims for warranty being denied.
- Product failures which result from operating the Product in an abusive, negligent, or reckless manner.
- Parts subject to consumption through use unless found to be defective. Examples of parts which are consumed, or used up, during normal Product operation include, but are not limited to: brakes, filters, lights, bulbs, belts, tracks or tires, digging teeth, digging booms, digging, drive, or track chains, track pads, drive sprockets, idlers, rollers, blades, cutting edges, or other ground engaging components.
- Failures caused by outside influence. Conditions considered to be outside influence include, but are not limited to, weather, storage practices, contamination, use of unapproved fuels, coolants, lubricants, additives, water, or chemicals, etc.
- Failure or performance issues due to the use of fuels (e.g. gasoline, diesel, or biodiesel) that do not conform to their respective industry standards.
- Normal noise, vibration, wear and tear, and deterioration.
- Normal "wear and tear" includes, but is not limited to, damage to seats due to wear or abrasion, worn painted surfaces, scratched decals, etc.
- Hauling expenses, travel time, mileage, or overtime associated with transporting product to the authorized Toro dealer.

Parts

Parts scheduled for replacement as required maintenance in the *Operator's Manual,* are warranted for the period of time up to the scheduled replacement time for that part. Parts replaced under this warranty are covered for the duration of the original product warranty and become the property of Toro. Toro will make the final decision whether to repair any existing part or assembly or replace it. Toro may use remanufactured parts for warranty repairs.

Maintenance is at Owner's Expense

Engine tune-up, lubrication, cleaning and polishing, replacement of filters, coolant, and completing recommended maintenance are some of the normal services Toro products require that are at the owner's expense.

General Conditions

Repair by an Authorized Toro Underground Dealer is your sole remedy under this warranty.

Neither The Toro Company nor Toro Warranty Company is liable for indirect, incidental or consequential damages in connection with the use of the Toro Products covered by this warranty, including any cost or expense of providing substitute equipment or service during reasonable periods of malfunction or non-use pending completion of repairs under this warranty. Except for the Emissions warranty referenced below, if applicable, there is no other express warranty. All implied warranties of merchantability and fitness for use are limited to the duration of this express warranty.

Some states do not allow exclusions of incidental or consequential damages, or limitations on how long an implied warranty lasts, so the above exclusions and limitations may not apply to you. This warranty gives you specific legal rights, and you may also have other rights which vary from state to state.

Note regarding engine warranty:

The Emissions Control System on your Product may be covered by a separate warranty meeting requirements established by the U.S. Environmental Protection Agency (EPA) and/or the California Air Resources Board (CARB). The hour limitations set forth above do not apply to the Emissions Control System Warranty. Refer to the Engine Emission Control Warranty Statement supplied with your product or contained in the engine manufacturer's documentation for details.

Countries Other than the United States or Canada

Customers who have purchased Toro products exported from the United States or Canada should contact their Toro Distributor (Dealer) to obtain guarantee policies for your country, province, or state. If for any reason you are dissatisfied with your Underground Dealer's service or have difficulty obtaining guarantee information, contact the Toro importer.

Australian Consumer Law: Australian customers will find details relating to the Australian Consumer Law either inside the box or at your local Toro Dealer.