FORM NO. 3318–787GB

TORO®

ProLine® 53 cm Side Discharge

Walk Power Mower

Model No. 22701 — 7900001 & Up

Operator's Manual

Figures

1

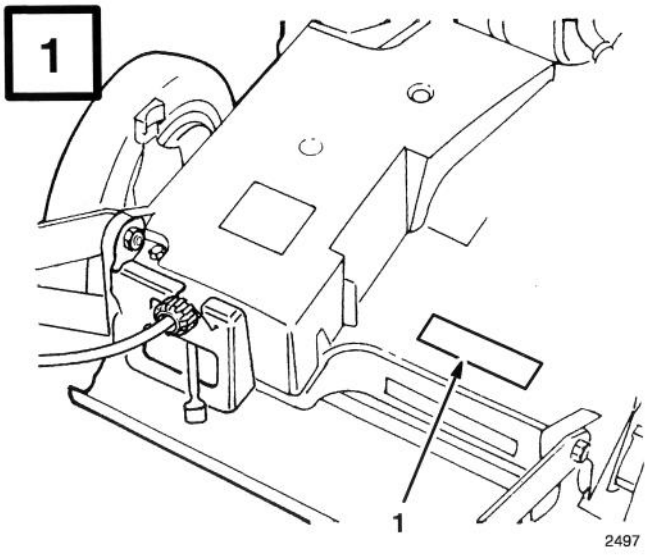

1. Model and serial number decal

2

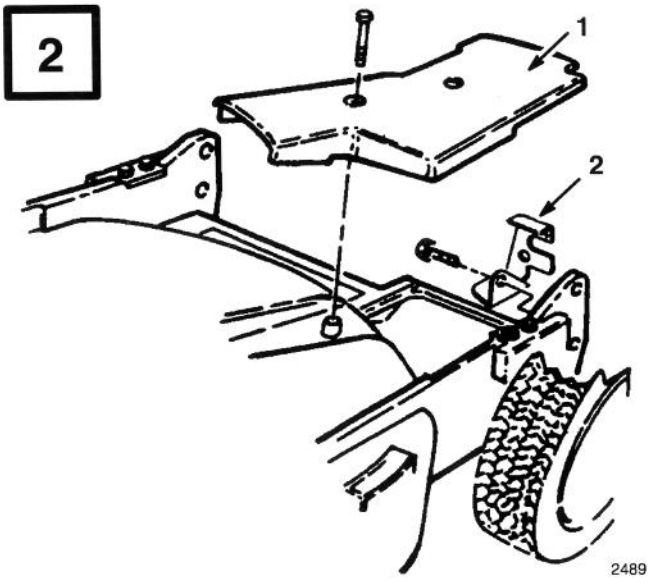

1. Belt cover
2. Traction adjustment bracket

3

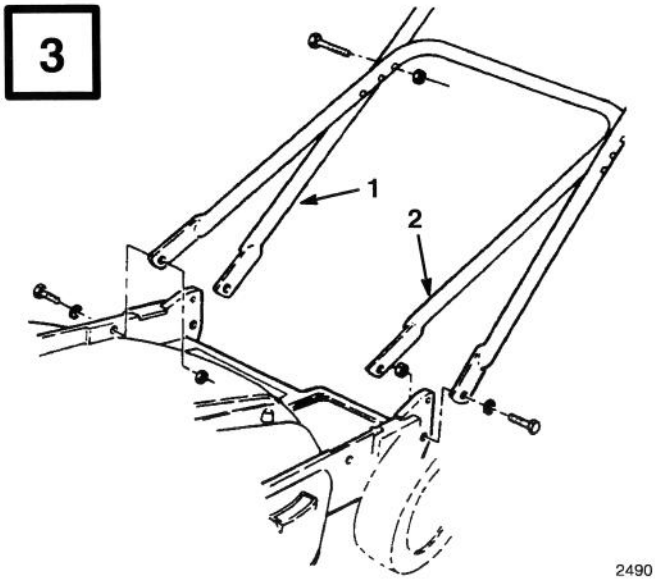

1. Upper handle
2. Lower handle

4

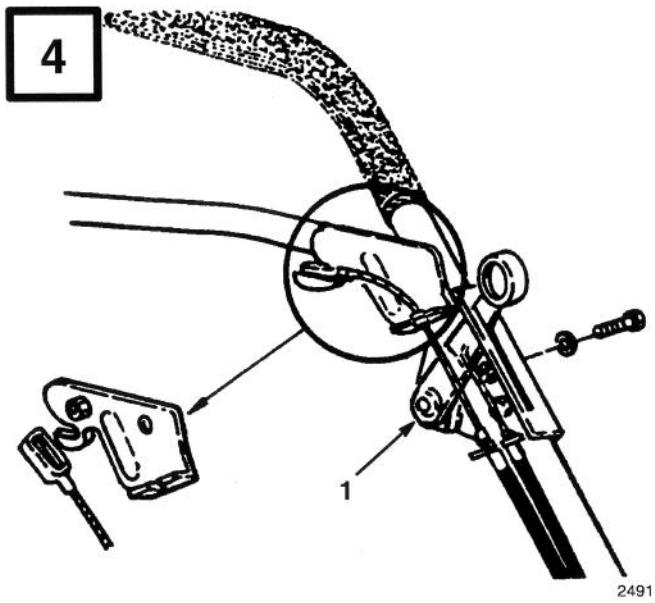

1. Throttle control

©The Toro Company – 1997
All Rights Reserved

Printed in USA

5

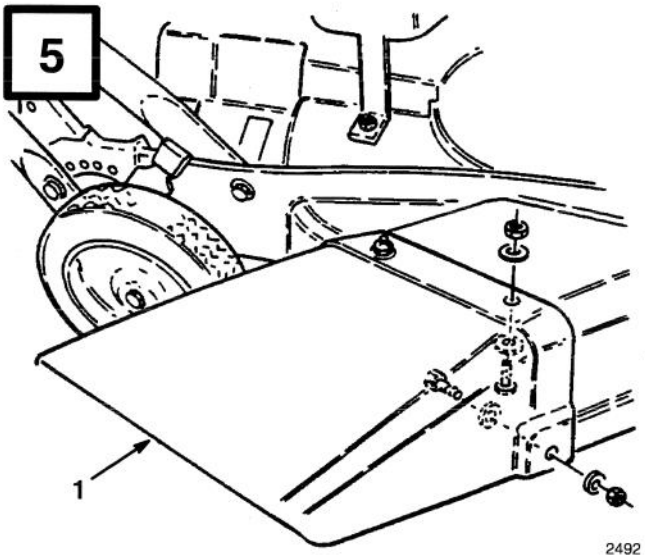

1. Deflector

6

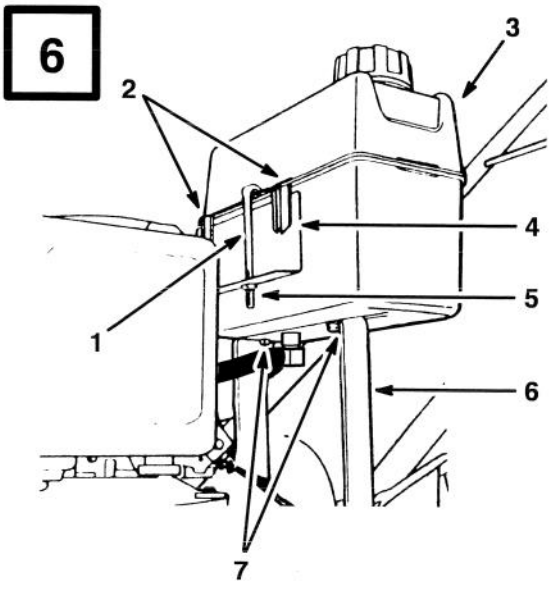

1. Gas tank retainer
2. Plastic clips
3. Gas tank
4. Gas tank bracket
5. Locknut
6. Tank base
7. Self-tapping screws

7

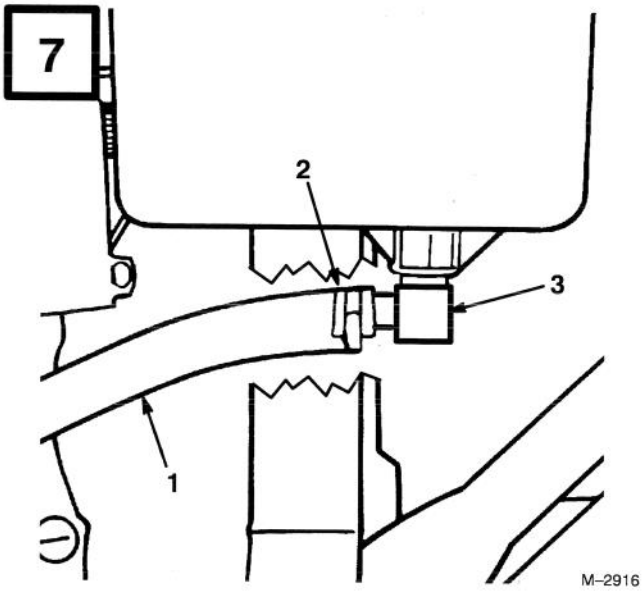

1. Fuel line
2. Fuel line clamp
3. Elbow fitting

8

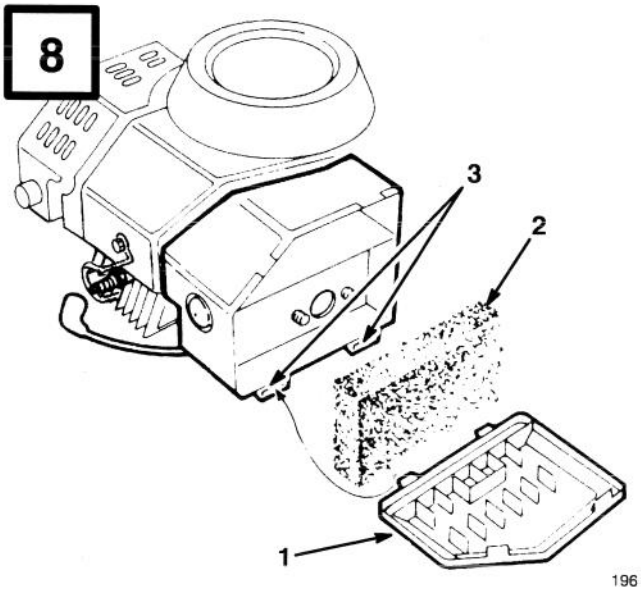

1. Cover
2. Foam element
3. Tabs

9

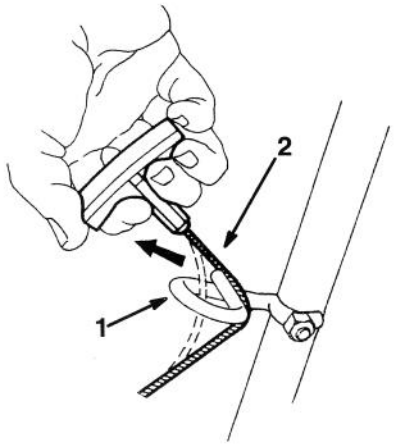

M–2917

1. Rope guide
2. Starter rope

10

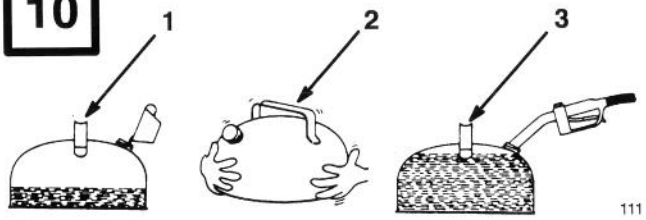

111

1. Add oil to small amount of gasoline
2. Install cap and shake can to mix
3. Add remaining amount of gasoline

11

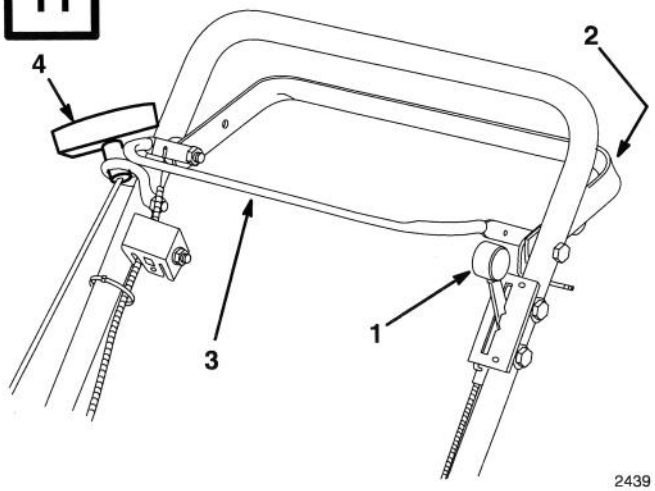

2439

1. Throttle
2. Self–propel control bar
3. Blade control bar
4. Fingertip starter

12

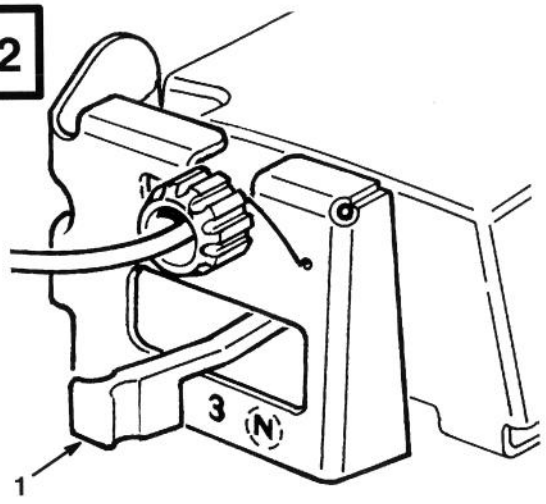

228

1. Ground speed control

13

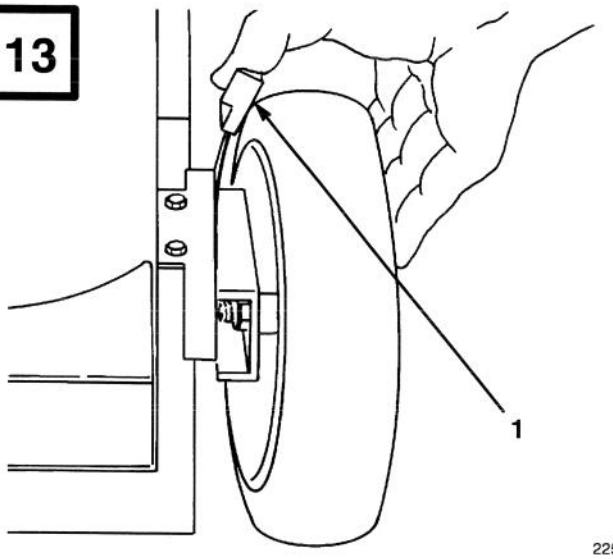

225

1. Height-of-cut adjuster

14

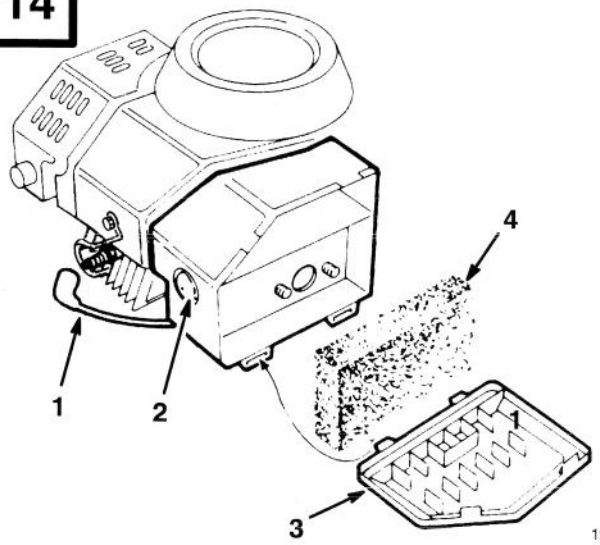

196

1. Spark plug wire
2. Primer
3. Cover
4. Foam element

15

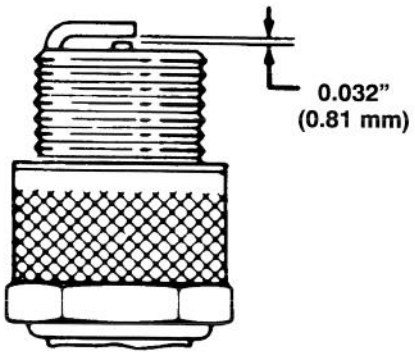

110

16

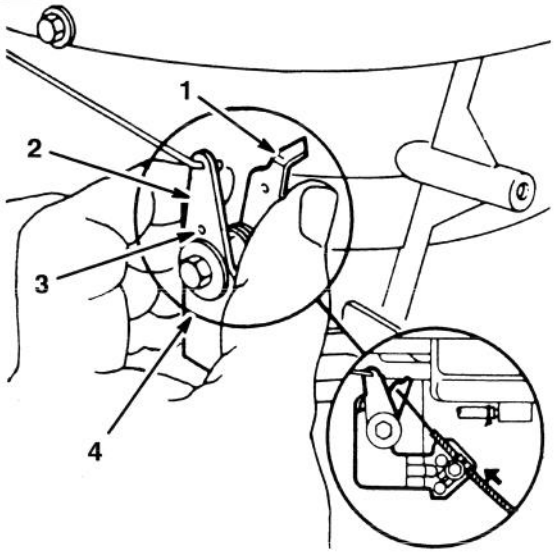

808

1. Throttle arm
2. Choke arm
3. Aligned holes
4. Throttle bracket

17

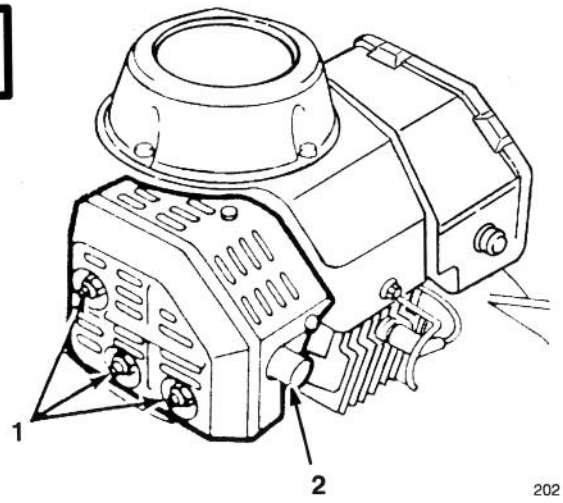

202

1. Screw, nuts, lockwashers
2. Muffler port

18

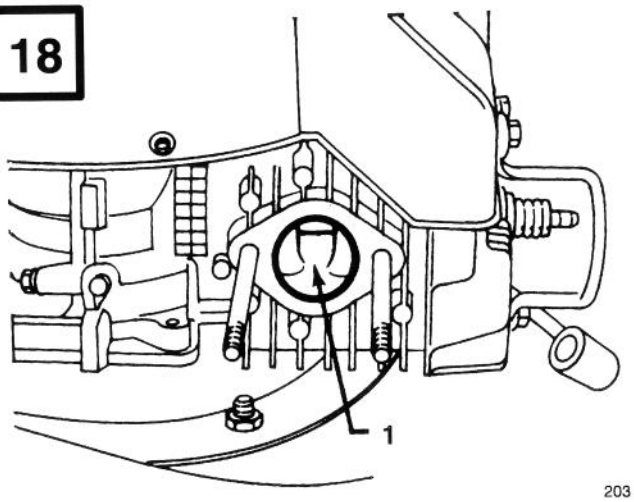

203

1. Exhaust port

19

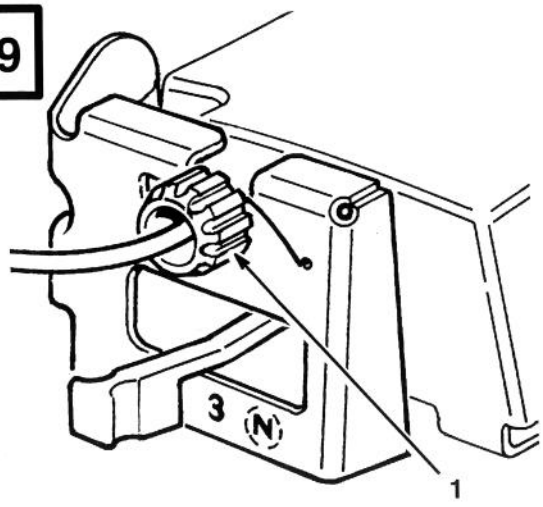

228

1. Control knob

20

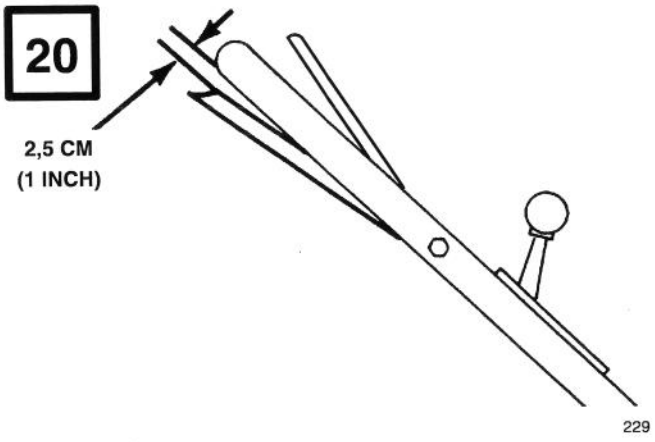

229

21

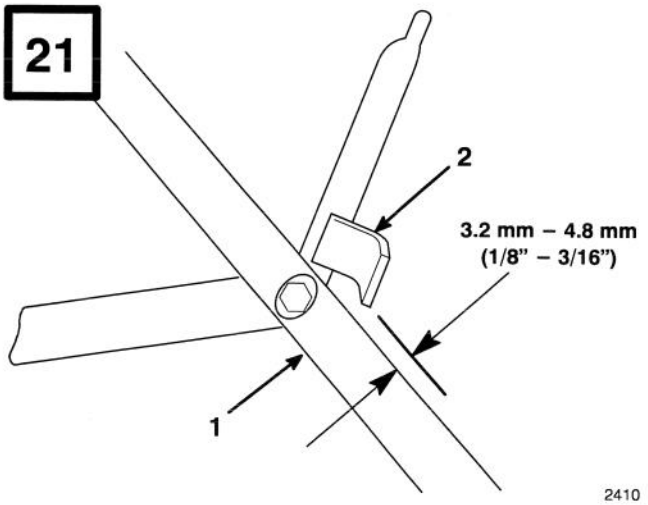

1. Handle
2. Brake lever

22

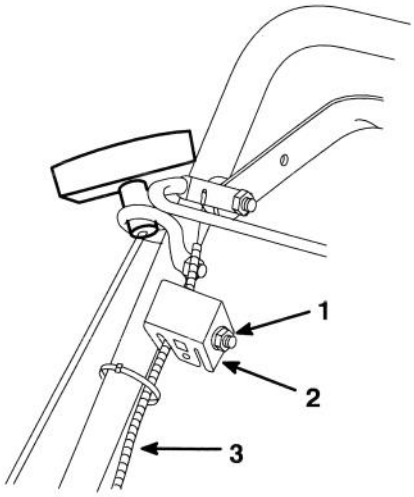

1. Nut
2. Cable bracket
3. Cable conduit

23

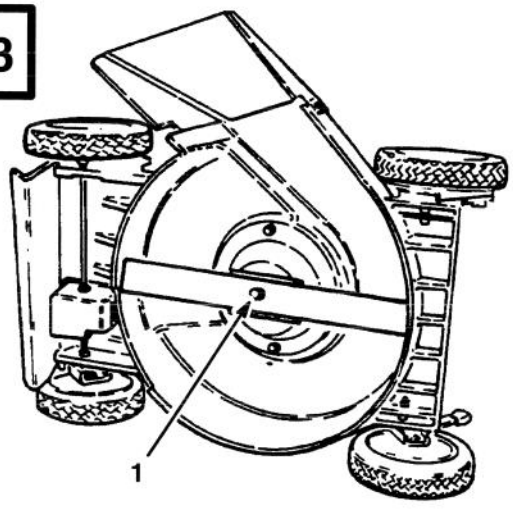

1. Blade bolt, lockwasher and blade

24

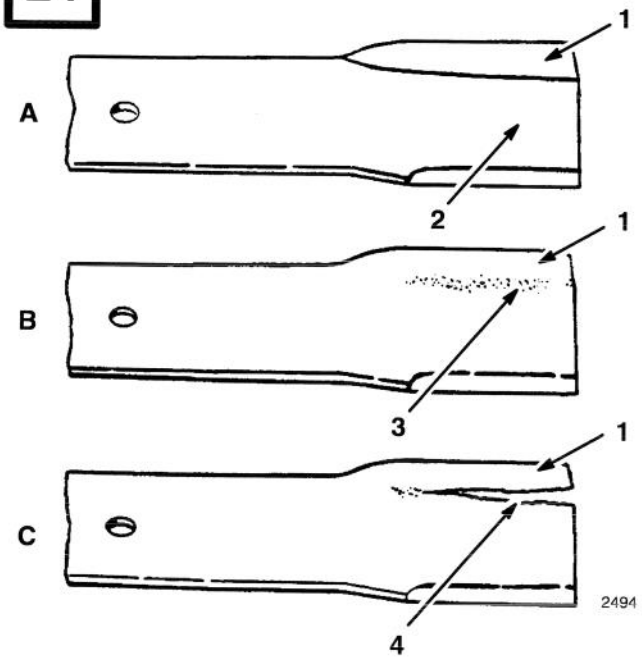

1. Sail
2. Flat part of blade
3. Wear
4. Slot formed

25

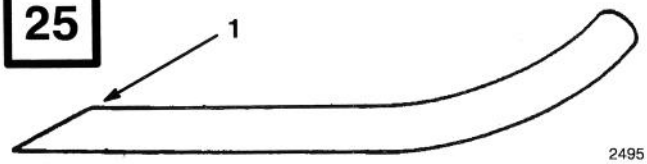

1. Sharpen at this angle only

26

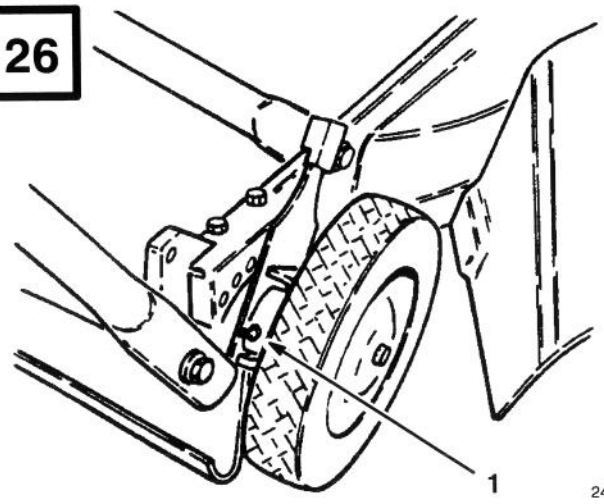

1. Grease fitting

27

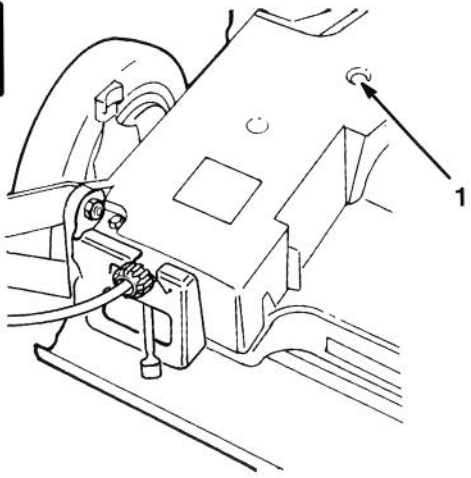

1. Grease fitting

28

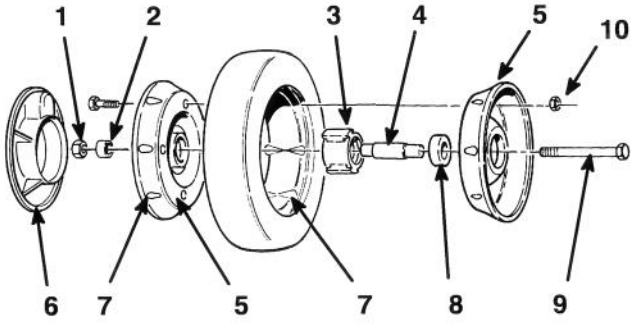

1. Locknuts
2. Wheel spacer
3. Bearing support hub
4. Bearing spacer
5. Wheel half
6. Plastic cover (rear wheels only)
7. Lug
8. Bearing (2)
9. Capscrew
10. Locknuts (4)

Contents

	Page
Introduction	1
Safety	2
Training	2
Preparation	2
Operation	2
Maintenance and Storage	3
Sound Pressure Level	4
Sound Power Level	4
Vibration Level	4
Symbol Glossary	4
Assembly	7
Handles	7
Throttle Control	7
Deflector	7
Gas Tank	7
Air Cleaner Cover	8
Starter Rope	8
Before Starting	8
Mix Gasoline And Oil—50:1 Ratio	8
Operation	9
Starting, Stopping, and Self-propelling	9
Adjusting Height–of–cut	9
Operating Tips	10
Maintenance	10
Servicing Air Cleaner	10
Replacing Spark Plug	11
Draining Gasoline	11
Adjusting Throttle	11
Cleaning Cooling System	11
Cleaning Muffler And Exhaust Port	11
Adjusting Wheel Drive	12
Adjusting Blade Brake	12
Inspecting/Removing/ Sharpening Blade	12
Lubrication	13
Lubricating Gear Case	13
Servicing Wheels (Fig. 28)	13
Cleaning Mower Housing	13
Storage	14
Accessories	14

Introduction

Thank you for purchasing a Toro product.

All of us at Toro want you to be completely satisfied with your new product, so feel free to contact your local Authorized Service Dealer for help with service, genuine Toro parts, or other information you may require.

Whenever you contact your Authorized Service Dealer or the factory, always know the model and serial numbers of your product. These numbers will help the Service Dealer or Service Representative provide exact information about your specific product. You will find the model and serial number decal located in a unique place on the product (Fig. 1).

For your convenience, write the product model and serial numbers in the space below.

Model No. _____

Serial No. _____

Read this manual carefully to learn how to operate and maintain your product correctly. Reading this manual will help you and others avoid personal injury and damage to the product. Although Toro designs, produces and markets safe, state-of-the-art products, you are responsible for using the product properly and safely. You are also responsible for training persons who you allow to use the product about safe operation.

The Toro warning system in this manual identifies potential hazards and has special safety messages that help you and others avoid personal injury, even death.

DANGER, WARNING and CAUTION are signal words used to identify the level of hazard. However, regardless of the hazard, be extremely careful.

DANGER signals an extreme hazard that will cause serious injury or death if the recommended precautions are not followed.

WARNING signals a hazard that may cause serious injury or death if the recommended precautions are not followed.

CAUTION signals a hazard that may cause minor or moderate injury if the recommended precautions are not followed.

Two other words are also used to highlight information. "Important" calls attention to special mechanical information and "Note" emphasizes general information worthy of special attention.

Safety

Training

1. Read the instructions carefully. Be familiar with the controls and the proper use of the equipment.
2. Never allow children or people unfamiliar with these instructions to use the lawnmower. Local regulations may restrict the age of the operator.
3. Never mow while people, especially children, or pets are nearby.
4. Keep in mind that the operator or user is responsible for accidents or hazards occurring to other people or their property.

Preparation

1. While mowing, always wear substantial footwear and long trousers. Do not operate the equipment when barefoot or wearing open sandals.
2. Always wear safety glasses or eye shields during operation to protect eyes from foreign objects that may be thrown from the machine. Wearing of hearing protection, protective gloves and a safety helmet is advisable and may be required by local regulations.
3. Thoroughly inspect the area where the equipment is to be used and remove all objects which may be thrown by the machine.
4. WARNING – Petrol is highly flammable.
   - Store fuel in containers specifically designed for this purpose.
   - Refuel outdoors only and do not smoke while refuelling.
   - Add fuel before starting the engine. Never remove the cap of the fuel tank or add petrol while the engine is running or when the engine is hot.
   - If petrol is spilled, do not attempt to start the engine but move the machine away from the area of spillage and avoid creating any source of ignition until petrol vapors have dissipated.
   - Replace all fuel tanks and container caps securely.
5. Replace faulty silencers.
6. Before using, always visually inspect to see that the blades, blade bolts and cutter assembly are not worn or damaged. Replace worn or damaged blades and bolts in sets to preserve balance.
7. On multi–bladed machines, take care as rotating one blade can cause other blades to rotate.

Operation

1. Do not operate the engine in a confined space where dangerous carbon monoxide fumes can collect.
2. Mow only in daylight or in good artificial light.

3. Avoid operating the equipment in wet grass, where feasible.

4. Always be sure of your footing on slopes.

5. Walk, never run.

6. For wheeled rotary machines, mow across the face of slopes, never up and down.

7. Exercise extreme caution when changing direction on slopes.

8. Do not mow excessively steep slopes.

9. Use extreme caution when reversing or pulling the lawnmower towards you.

10. Stop the blade(s) if the lawnmower has to be tilted for transportation when crossing surfaces other than grass, and when transporting the lawnmower to and from the area to be mowed.

11. Never operate the lawnmower with defective guards or shields, or without safety devices, for example deflectors and/or grass catchers, in place.

12. Do not change the engine governor settings or overspeed the engine.

13. Disengage all blade and drive clutches before starting the engine.

14. Start the engine or switch on the motor carefully according to instructions and with feet well away from the blade(s).

15. Do not tilt the lawnmower when starting the engine or switching on the motor, except if the lawnmower has to be tilted for starting. In this case, do not tilt it more than absolutely necessary and lift only the part which is away from the operator.

16. Do not start the engine when standing in front of the discharge chute.

17. Do not put hands or feet near or under rotating parts. Keep clear of the discharge opening at all times.

18. Never pick up or carry a lawnmower while the engine is running.

19. Stop the engine and disconnect the spark plug wire.

    - before clearing blockages or unclogging chute;
    - before checking, cleaning or working on the lawnmower;
    - after striking a foreign object. Inspect the lawnmower for damage and make repairs before restarting and operating the lawnmower;
    - if lawnmower starts to vibrate abnormally (check immediately).

20. Stop the engine

    - whenever you leave the lawnmower;
    - before refuelling.

21. Reduce the throttle setting during engine shut down and, if the engine is provided with a shut-off valve, turn the fuel off at the conclusion of mowing.

22. Go slow when using a trailing seat.

Maintenance and Storage

1. Keep all nuts, bolts and screws tight to be sure the equipment is in safe working condition.

2. Never store the equipment with petrol in the tank inside a building where fumes may reach an open flame or spark.

3. Allow the engine to cool before storing in any enclosure.

4. To reduce the fire hazard, keep the engine, silencer, battery compartment and petrol storage area free of grass, leaves, or excessive grease.

5. Check the grass catcher frequently for wear or deterioration.

6. Replace worn or damaged parts for safety.

7. If the fuel tank has to be drained, this should be done outdoors.

Sound Pressure Level

This unit has an equivalent continuous A-weighted sound pressure at the operator ear of: 85 dB(A), based on measurements of identical machines per ANSI B71.5-1984 procedures.

Sound Power Level

This unit has a sound power level of: 100 dB(A)/1 pW, based on measurements of identical machines per Directive 84/538/EEC and amendments.

Vibration Level

This unit has a maximum hand-arm vibration level of 3.38 m/s2, based on measurement of identical machines per ISO 5349 procedures.

Symbol Glossary

Safety alert triangle — symbol within triangle indicates a hazard.

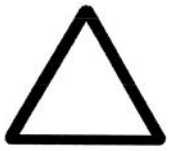

Safety alert symbol



Read operator's manual.



Consult technical manual for proper service procedures.



Stay a safe distance from the machine.

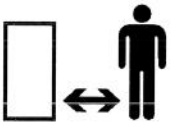

Stay a safe distance from the mower.



Do not open or remove safety shields while engine is running.



Rotating blade can cut off toes or fingers. Stay clear of mower blade as long as engine is running.



To avoid blade failure when mulching, use blade stiffener when mower is equipped with mulching plug.



Transmission



Oil



On/Run



Throw or flying objects — Whole body exposure



Thrown or flying objects — Rotary side-mounted mower. Keep deflector shield in place.



Stop engine before leaving operator position.



Hourmeter/elapsed operating hours

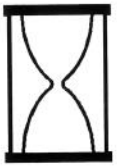

Fast



Slow



Decreasing/Increasing



Grease lubrication point



Engage

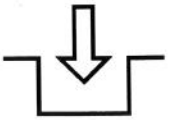

Disengage

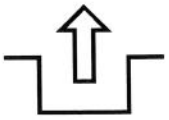

Battery charging condition

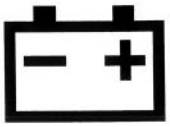

Fuel



Neutral

N

First gear

1

Second gear

2

Third gear

3

Engine start

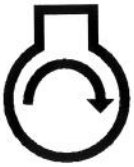

Cutting element — basic symbol



Engine stop



Choke

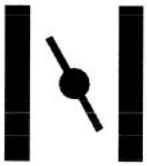

Primer (start aid)



Push primer three times.

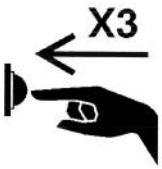

Properly dispose of batteries.



Insert key in ignition switch.

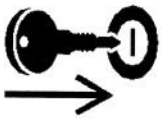

Turn key in ignition switch.



Move control.



Cutting element — height adjustment



Pull rope.



Wheel



Wheel traction



Lower control bar.



Raise control bar.



Raise/lower control bar.



Raise/lower control bar.



Raise control bar.



Lower control bar.



Raise control bar.



Assembly

Handles

1. Remove (2) screws securing belt cover to housing and remove cover (Fig. 2).

2. Remove screw securing traction adjustment bracket to housing and move bracket to side (Fig. 2).

3. Using front set of mounting holes, mount lower handle to inside of mower housing with (2) (5/16–18 x 1–1/4" lg.) capscrews, Belleville washers and locknuts as shown in fig. 3. Position washer next to capscrew head.

4. Using rear set of mounting holes, mount upper handle to outside of mower housing with (2) (5/16–18 x 1–1/14" lg.) capscrews, Belleville washers and locknuts as shown in fig. 3.

5. Align mounting holes in upper and lower handles and secure with (2) (5/16–18 x 2–1/2" lg.) capscrews and locknuts.

   Note: Handle height can be set in either set of holes in handles, depending on operator height.

6. Reassemble traction adjustment bracket and belt cover.

Throttle Control

1. Route throttle control under lower handle, hook traction cable onto traction control lever and install control against inside of upper handle with (2) (1/4–20 x 1–3/8" lg.) capscrews and curved washers (Fig. 4).

2. Secure cables to upper handle with a cable tie.

Deflector

1. Position the deflector onto mower housing opening and align mounting holes (Fig. 5).

2. Secure top of deflector to mower housing with (2) (1/4–20 x 7/8" lg.) capscrews, (4) washers and (2) locknuts. Washers must be positioned next to capscrew head and nut.

3. Secure front of deflector to mower housing with a (1/4–20 x 1–1/8" lg.) capscrew, (2) washers and a locknut. Washers to be positioned next to capscrew head and nut.

Gas Tank

1. Start self–tapping screws (Fig. 6) into bottom of gas tank and then remove screws.

2. Hook the plastic clips on the rear of the gas tank onto gas tank bracket (Fig. 6).

3. Secure gas tank to tank base with the (2) self-tapping screws (Fig. 6). Do not overtighten screws.

4. Hook gas tank retainer onto gas tank and slide end of retainer into hole in tank bracket. Secure retainer to tank bracket with locknut (Fig 6). Do not overtighten.

5. Slide end of fuel line onto elbow fitting. Secure in place with fuel line clamp (Fig. 7).

Air Cleaner Cover

1. Insert bottom tabs of air cleaner cover into slots. Rotate cover upwards and snap into place (Fig. 8).

Starter Rope

1. Pull the starter rope through the rope guide on the handle. To make the rope easier to loop, squeeze the blade control bar on the handle to release the blade brake (Fig. 9).

Before Starting

⚠ DANGER

POTENTIAL HAZARD

- **In certain conditions gasoline is extremely flammable and highly explosive.**

WHAT CAN HAPPEN

- **A fire or explosion from gasoline can burn you, others, and cause property damage.**

HOW TO AVOID THE HAZARD

- **Use a funnel and fill the fuel tank outdoors, in an open area, when the engine is cold. Wipe up any gasoline that spills.**
- **Do not fill the fuel tank completely full. Add gasoline to the fuel tank until the level is 1/4" to 1/2" (6 mm to 13 mm) below the bottom of the filler neck. This empty space in the tank allows gasoline to expand.**
- **Never smoke when handling gasoline, and stay away from an open flame or where gasoline fumes may be ignited by a spark.**
- **Store gasoline in an approved container and keep it out of the reach of children.**
- **Never buy more than a 30-day supply of gasoline.**

Mix Gasoline And Oil—50:1 Ratio

1. APPROVED OIL—For simplicity and best engine performance, mix the contents of one bottle of Toro 50:1 Two–Cycle Oil with 7.6 liters (two gallons) of fresh, unleaded regular gasoline. Leaded regular gasoline may be used if unleaded regular is not available.

   Toro Two–Cycle Oil is specially formulated to provide superior lubrication, make starting easy, and prolong engine life. If Toro Two–Cycle Oil is not available, mix 7.6 liters (two gallons) of gasoline and 154 ml (5.2 ounces) of another high grade two–cycle oil that has the NMMA or BIA–TCW certification printed on the label.

   Toro also recommends that Toro Stabilizer/Conditioner be used regularly in all Toro gasoline powered products during operation and storage seasons. Toro Stabilizer/Conditioner cleans the engine during operation and prevents gum-like varnish deposits from forming in the engine during periods of storage.

   IMPORTANT: YOU CAN ALSO USE TORO "EASY–MIX" TWO–CYCLE OIL 95 ML (3.2 OUNCE) BOTTLE MIXED ONE PER 3.8 LITERS (ONE GALLON) OF GASOLINE) IN THIS TORO TWO–CYCLE ENGINE.

   NEVER USE AUTOMOTIVE OIL (i.e. SAE 30, 10W30 etc.), TWO–CYCLE OIL THAT IS NOT CERTIFIED NMMA/BIA–TCW, OR THE WRONG MIX RATIO BECAUSE THE ENGINE CAN BE DAMAGED, AND IT WOULD NOT BE COVERED BY THE TORO WARRANTY.

2. Mixing Gasoline and Oil—Pour correct amount of gasoline into an approved gasoline container and add the correct amount of two–cycle oil (Fig. 10). Install cap on gasoline container and shake the container to mix oil and gas thoroughly. Remove cap and add remaining amount of gasoline.

Note: Do not mix gasoline and oil in the product fuel tank. Oil that is at room temperature mixes easier and more thoroughly than cold oil.

IMPORTANT: NEVER USE METHANOL, GASOLINE CONTAINING METHANOL, GASOHOL CONTAINING MORE THAN 10% ETHANOL, PREMIUM GASOLINE, OR WHITE GAS BECAUSE ENGINE FUEL SYSTEM DAMAGE COULD RESULT.

DO NOT USE FUEL ADDITIVES OTHER THAN THOSE MANUFACTURED FOR FUEL STABILIZATION DURING STORAGE SUCH AS TORO'S STABILIZER/CONDITIONER OR A SIMILAR PRODUCT. TORO'S STABILIZER/CONDITIONER IS A PETROLEUM DISTILLATE BASED STABILIZER/CONDITIONER. TORO DOES NOT RECOMMEND STABILIZERS WITH AN ALCOHOL BASE SUCH AS ETHANOL, METHANOL OR ISOPROPYL. STABILIZERS SHOULD NOT BE USED TO TRY TO ENHANCE THE POWER OR PERFORMANCE OF MACHINE.

50:1 Gas/Oil Mixing Chart

U.S. GALLON	
Gasoline	**Oil**
3.8 liters (1 gallon)	77 ml (2.6 oz.)
7.6 liters (2 gallons)	154 ml (5.2 oz.)

Operation

Starting, Stopping, and Self-propelling

1. CONTROLS—Throttle, blade control bar, self-propel control bar and fingertip starter are on upper handle (Fig. 11). Ground speed control is located at rear of belt cover (Fig. 12).
2. Push spark plug wire onto spark plug.
3. STARTING—Move ground speed control to neutral and throttle to (CHOKE). Cover hole in center of primer with thumb and push once. Squeeze blade control bar against handle. Pull fingertip starter out until positive engagement results; then pull vigorously to start the engine. Regulate throttle as desired when engine starts.

   Note: A cold engine will start easier by pumping the primer bulb 3–5 times before pulling the starter rope. When starting a warm engine, (CHOKE) may not be necessary.
4. TRACTION OPERATION—Move ground speed control to desired speed selection (Fig. 12). Squeeze self-propel control bar against handle to drive. Ground speed varies, depending on space between control bar and handle (Fig. 11).
5. STOPPING—To stop the self–propel drive, release the self-propel control bar. To stop engine, release blade control bar. Pull wire off spark plug if mower will be unattended or not used.

Adjusting Height–of–cut

The height–of–cut is adjustable from approximately 19 mm to 83 mm (3/4 to 3–1/4 inches), in 12.7 mm (1/2 inch) increments. Moving height–of–cut adjuster forward raises height–of–cut.

1. Stop the engine.

2. For easier adjustment, lift housing up so wheel is off ground. **Do not place hands under deck to lift housing.** Squeeze adjusting lever toward wheel (Fig. 13) and move it to the desired setting. Ensure pin on adjusting lever engages notch in mower housing wear plate. Adjust all wheels to the same setting.

⚠ DANGER

POTENTIAL HAZARD
- **Adjusting height–of–cut levers could bring hands into contact with moving blade.**

WHAT CAN HAPPEN
- **Contact with blade could cause serious personal injury.**

HOW TO AVOID THE HAZARD
- **Do not adjust the height–of–cut settings when engine is running and blade is rotating.**
- **Do not put fingers under housing to lift mower when adjusting height–of–cut levers.**

Operating Tips

1. CUTTING—Best results are achieved when engine is running at maximum speed and only about 1/3 of the grass blade is cut. If long grass must be cut, use highest height–of–cut setting for first mowing, Then recut the grass at a more normal setting. If too long of grass is cut, mower may plug and cause engine to stall.

2. SHARPEN BLADE—Begin each cutting season with a sharp blade. Periodically file down nicks.

Maintenance

⚠ WARNING

POTENTIAL HAZARD
- **When wire is on spark plug, someone could accidentally start the engine.**

WHAT CAN HAPPEN
- **Accidental starting of engine could cause serious injury to operator or other bystanders.**

HOW TO AVOID THE HAZARD
- **Pull wire off spark plug before performing any maintenance or adjustments.**

Servicing Air Cleaner

Normally, clean air cleaner after every 25 operating hours. More frequent cleaning is required when mower is operated in dusty or dirty conditions.

1. Stop engine and pull wire off spark plug (Fig. 14).

2. Lift tabs at top of air cleaner cover and pivot cover down. Clean cover thoroughly (Fig. 14).

3. If outside of foam element is dirty, remove it from air cleaner body (Fig. 14). Clean thoroughly.

   A. WASH foam element in a solution of liquid soap and warm water. Squeeze to remove dirt, but do not twist because foam may tear. Rinse thoroughly in clear water.

   B. DRY by wrapping in a clean rag. Squeeze rag and foam element to dry.

   C. SATURATE element with SAE engine oil. Squeeze element to remove excess oil and to distribute oil thoroughly. A damp element is desirable.

4. Reinstall foam element and air cleaner cover.

IMPORTANT: Do not operate engine without air cleaner element because extreme engine wear and damage will likely result.

Replacing Spark Plug

Use an NGK BPMR4A spark plug or equivalent. Correct air gap is 0.81 mm (0.032"). Remove plug after every 25 operating hours and check its condition.

1. Stop engine and pull wire off spark plug (Fig. 14).
2. Clean around spark plug and remove plug from cylinder head.

   IMPORTANT: Replace a cracked, fouled, or dirty spark plug. Do not sand blast, scrape, or clean electrodes because engine damage could result from grit entering cylinder.
3. Set air gap at 0.81 mm (0.032") (Fig. 15). Install correctly gapped spark plug and gasket seal. Tighten plug firmly to 13.6 N·m (10 ft–lb).

Draining Gasoline

1. Stop engine and pull wire off spark plug (Fig. 14).
2. Remove cap from fuel tank and use pump–type syphon to drain fuel into clean gas can.

   Note: This is the only procedure recommended for draining fuel.

Adjusting Throttle

Throttle control adjustment may be required if engine does not start. Whenever a new throttle control cable is installed, throttle must be adjusted.

1. Stop engine and pull wire off spark plug (Fig. 14).
2. Move throttle control to (FAST).
3. Loosen cable clamp screw until throttle cable slides (Fig. 16). Align holes in choke arm and throttle bracket. A small dia. pin may be inserted into aligned holes to hold adjustment. Push throttle cable until throttle arm makes contact with choke arm. Tighten cable clamp. Remove pin if used.

Cleaning Cooling System

After every 75 operating hours, clean dirt and chaff from cylinder, cylinder head fins and from around carburetor and linkage. Also remove debris from air intake slots on recoil housing. This will ensure proper cooling and best engine performance.

Cleaning Muffler And Exhaust Port

Clean end of muffler pipe and exhaust port after every 75 hours of operation.

⚠ CAUTION

POTENTIAL HAZARD
- **Muffler and engine become hot when mower is operating.**

WHAT CAN HAPPEN
- **A hot engine and muffler can cause burns.**

HOW TO AVOID THE HAZARD
- **Clean muffler and exhaust port only after engine and muffler are cool.**

1. Stop engine and pull wire off spark plug (Fig. 14).
2. Use hard wood scraper and remove carbon from end of muffler pipe (Fig. 17).
3. Remove screw, two nuts, and lockwashers (Fig. 17). Slide muffler off mounting pins.
4. Pull wire off spark plug. Slowly pull recoil starter so piston covers exhaust port (Fig. 18).
5. Clean carbon from exhaust port (Fig. 18) with flat, hard wood scraper.

IMPORTANT: Do not use a metal scraper or similar object to clean exhaust port because accidental damage to the piston or cylinder could easily occur.

6. Reinstall muffler with screw, (2) nuts and lockwashers (Fig. 17). After cleaning exhaust port, make sure muffler gasket is still usable.

Adjusting Wheel Drive

If mower does not self–propel or has a tendency to creep forward when drive is not engaged, adjust wheel drive control knob on rear of gear box.

1. ADJUSTMENT (Fig. 19)—Rotate control knob clockwise 1/2 turn if mower does not self–propel. If mower creeps forward, rotate knob 1/2 turn counterclockwise to loosen belt.

2. CHECK ADJUSTMENT—Slowly pull mower backward while control bar is gradually moved toward handle. Adjustment is correct when rear wheels stop turning and control bar is about 1–inch from handle (Fig. 20).

3. Repeat steps 1 and 2 until properly adjusted.

Adjusting Blade Brake

Whenever a new blade brake cable assembly is installed, an adjustment is required.

1. Stop engine and pull wire off spark plug (Fig. 14).

2. CHECK ADJUSTMENT (Fig. 21)—Move control bar toward handle until slack in wire is removed. Gap between brake lever and handle must be 3.2–4.8 mm (1/8"–3/16"). See step 3 for adjustment.

3. ADJUST CABLE CONDUIT (Fig. 22)—Loosen nut on cable bracket. Insert 3.2–4.8 mm (1/8"–3/16") object between brake lever and handle. Pull down on cable conduit until all slack is removed from wire. Then tighten nut.

Inspecting/Removing/ Sharpening Blade

1. Stop engine and pull wire off spark plug (Fig. 14).

2. Drain gasoline from fuel tank; refer to Draining Gasoline, page 12.

3. Tip mower on its left side (Fig. 23).

4. INSPECTING BLADE—Carefully examine blade for sharpness and wear, especially where flat and curved parts meet (Fig. 24A). Since sand and abrasive material can wear away the metal that connects the flat and curved parts of the blade, check blade before using the mower. If a slot or wear is noticed, (Fig. 24B & C), replace blade. Refer to step 5.

   Note: For best performance, install new blade before cutting season begins. During the year, file down small nicks to maintain the cutting edge.

⚠ DANGER

POTENTIAL HAZARD
- **A worn or damaged blade could break and a piece of blade could be thrown into operator's or bystander's area.**

WHAT CAN HAPPEN
- **A thrown piece of blade could cause serious personal injury or death to operator or bystanders.**

HOW TO AVOID THE HAZARD
- **Inspect blade periodically for wear or damage.**
- **Replace a worn or damaged blade.**

5. REMOVING BLADE—Grasp end of blade using a rag or thickly padded glove. Remove blade bolt, lockwasher, and blade (Fig. 23).

6. SHARPENING BLADE—Using a file, sharpen top side of blade and maintain original cutting angle (Fig. 25). The blade will remain balanced if same amount of material is removed from both cutting edges.

   IMPORTANT: Check balance of blade by putting it on a blade balancer. An inexpensive balancer can be purchased at a hardware store. A balanced blade stays in a horizontal position and an unbalanced blade settles to the heavy side. If blade is not balanced, file more metal off cutting edge on heavy end of blade.

7. Install sharp, balanced blade with lockwasher and blade bolt. Sail part of blade must point toward top of mower housing to ensure correct installation. Tighten blade bolt to 50 ft–lb (68 N·m).

Lubrication

After every 25 operating hours or when season ends, pivot arms must be lubricated.

1. Move rear wheel height–of–cut levers to center setting. Wipe grease fittings with clean rag (Fig. 26). Install grease gun onto fitting and gently apply 2 or 3 pumps of #2 Multi–Purpose Lithium Base Grease. Excessive pressure may damage seals.

Lubricating Gear Case

After every 100 operating hours, grease the gear case with #2 Multi–Purpose Lithium Base Grease.

1. Install grease gun onto fitting thru belt cover opening (Fig. 27). Gently apply 1–2 pumps of grease.

Servicing Wheels (Fig. 28)

Removal

1. Stop and engine and wait for all moving parts to stop. Pull wire off spark plug (Fig. 14).

2. Remove capscrew, wheel spacer, and locknut mounting wheel to pivot arm.

3. Separate wheel halves from tire by removing (4) capscrews and locknuts.

   Note: If bearings are to be removed from bearing support hub, remove by pressing on bearing spacer.

Assembly

1. Position tire onto (1) wheel half, aligning lugs on each (Fig. 28).

2. Place bearing support hub into center hole of wheel half. Make sure legs of hub are positioned over flange of hole.

3. Place other wheel half onto bearing support hub, aligning wheel and tire lugs and mounting holes.

4. Using (2) 1/4—20 x 1.50" lg. fully threaded screws or bolts and non–locking nuts, loosely secure wheel halves together. Mount screws or bolts in opposing holes.

5. Check alignment of all parts and tighten screws, alternating from side to side for a uniform fit, until wheel halves are drawn together.

6. Install (2) capscrews and locknuts, previously removed, in remaining holes in wheel halves and tighten. Remove (2) long screws or bolts and replace them with (2) flange capscrews and locknuts.

7. Reinstall wheel to pivot arm with capscrews, spacer, and locknut. Make sure spacer is positioned between wheel hub and pivot arm.

Cleaning Mower Housing

To ensure best performance, keep underside of mower housing and inside of discharge area clean.

1. Pull wire off spark plug (Fig. 14).

2. Drain gasoline from fuel tank: refer to Draining Gasoline, page 12.

3. Tip mower on its left side.

4. Remove dirt and grass clippings that stick to housing with a hardwood scraper. Avoid burrs and sharp edges.

Storage

1. For long term storage, either drain gasoline from fuel tank or add a fuel additive to the gasoline. To drain gasoline, refer to Draining Gasoline, page 12. After fuel is drained, start engine and let it idle until all fuel is consumed and engine stops. If gasoline is not drained, gum–like varnish deposits will form and cause poor engine operation, even starting problems.

   Fuel can be left in gas tank only if a fuel stabilizer, such as Toro's Stabilizer/Conditioner, is added to gasoline before storing. Toro's Stabilizer/Conditioner is a petroleum distillate based stabilizer/conditioner. Toro does not recommend stabilizers with an alcohol base, such as ethanol, methanol or isopropyl. Use fuel stabilizer in recommended quantities as specified on container.

   Under normal conditions, fuel stabilizers remain effective in fuel for 6–8 months.

2. Remove spark plug and pour 2 teaspoons of Toro Two–Cycle Oil into hole in cylinder. Pull starter rope slowly to coat inside of cylinder. Install spark plug and tighten to 10 ft–lb (13.6 N·m). DO NOT REINSTALL WIRE ON SPARK PLUG.

3. Clean underside of housing: refer to Cleaning Mower Housing, page 14.

4. Check condition of blade: refer to Inspecting/Removing/Sharpening Blade, page 13.

5. Tighten all nuts, bolts, and screws.

6. Clean dirt and chaff from cylinder, cylinder head fins, and blower housing. Also remove grass clippings, dirt, and grime from external parts of the engine, shrouding, and top of mower housing.

7. Clean air cleaner: refer to Servicing Air Cleaner, page 11.

8. Lubricate the pivot arms: refer to Lubrication, page 14.

9. Touch up all rusted or chipped paint surfaces. Toro Re–Kote paint is available from an Authorized TORO Service Dealer.

10. Store mower in a clean, dry place, out of the reach of children. Cover mower to keep it clean and protected.

Accessories

Spark Arrestor – Part #81-0200 — If a spark arrestor is required because of local, state, or federal regulations, it may be purchased at your local Authorized TORO Service Dealer. If mower is operated on any California forest, brush, or grass covered land without a properly operating spark arrestor, the operator is violating state law, Section 4442 Public Resources Code.