FORM NO. 3318–789GB

TORO®

48cm Rear Bagger

Walk Power Mower

Model No. 20913–7900001 & Up
Model No. 20914–7900001 & Up

Operator's Manual

Figures

1

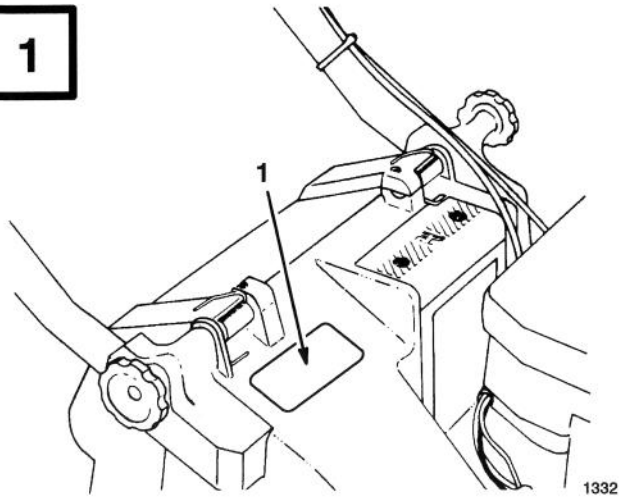

1. Model and serial number decal location

2

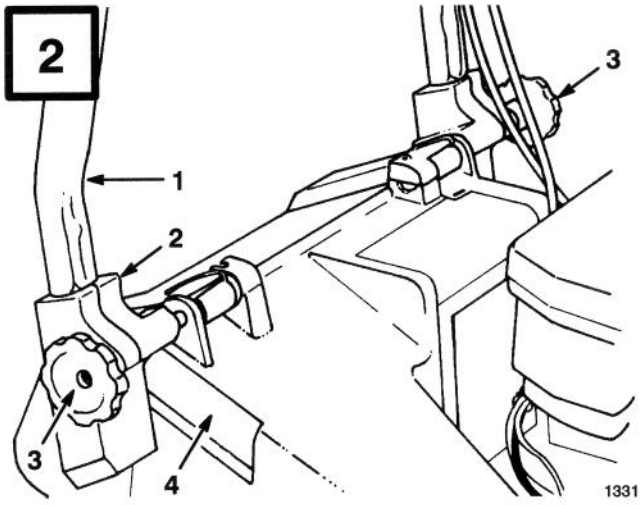

1. Handle
2. Mounting bracket
3. Knobs
4. Housing pocket

3

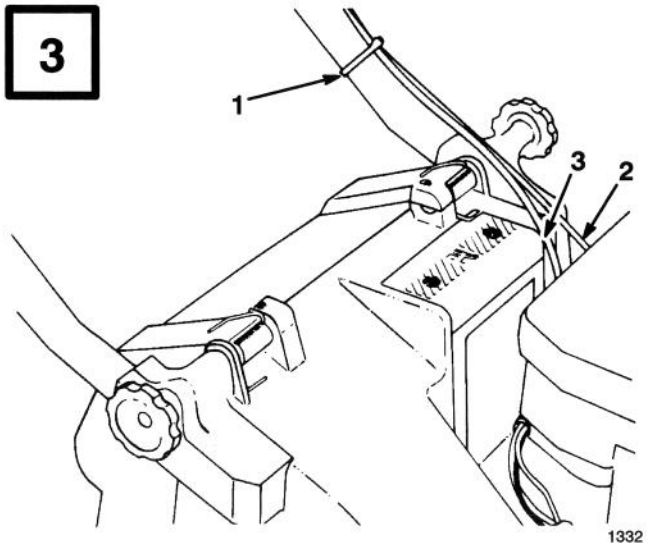

1. Cable tie
2. Throttle cable
3. Traction cable*

* self-propelled model

4

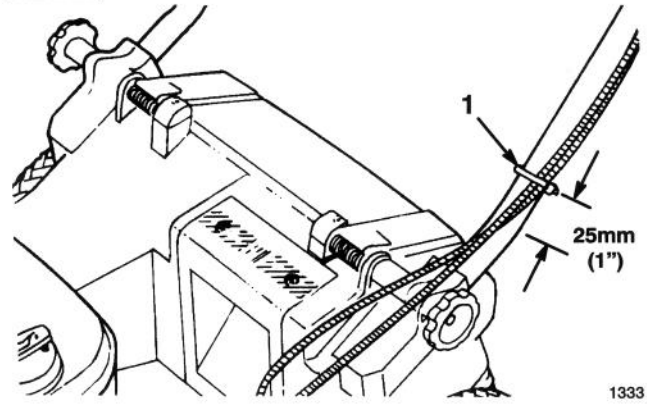

1. Cable tie

©The Toro Company – 1997
All Rights Reserved

Printed in USA

5

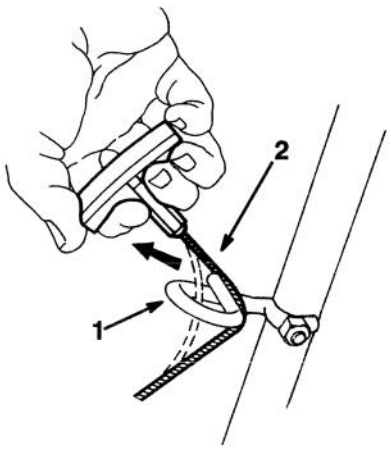

M–2917

1. Rope guide
2. Starter rope

6

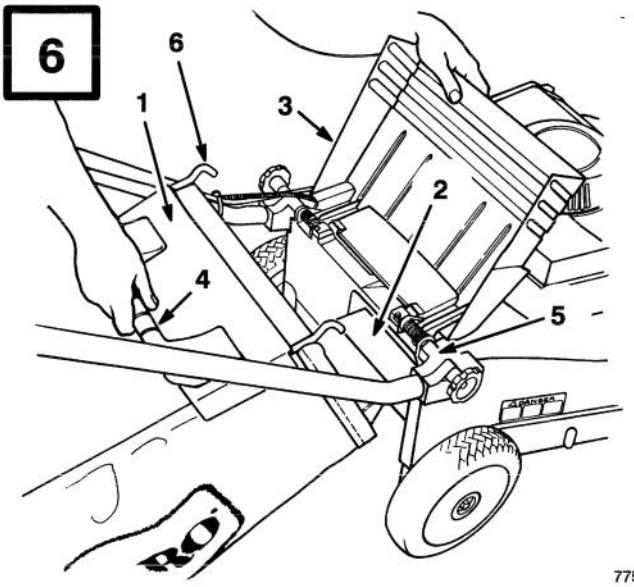

775

1. Bag door
2. Bag ramp
3. Discharge door
4. Bag handle
5. Mounting bracket
6. Bag frame hook

7

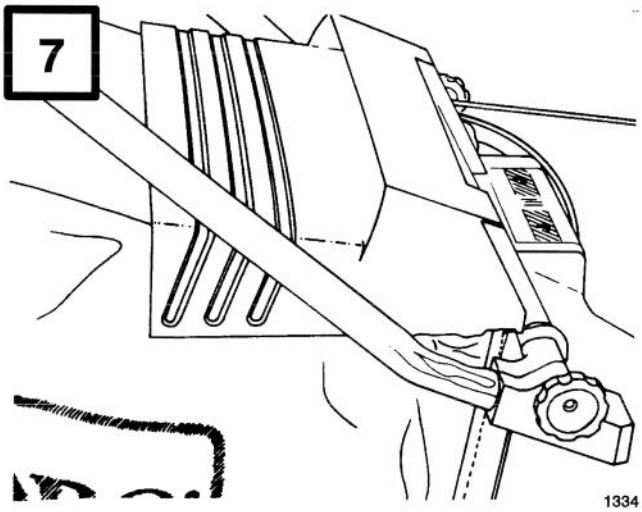

1334

8

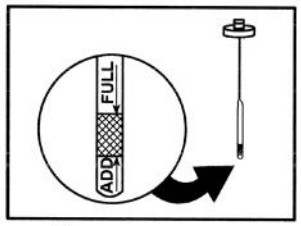

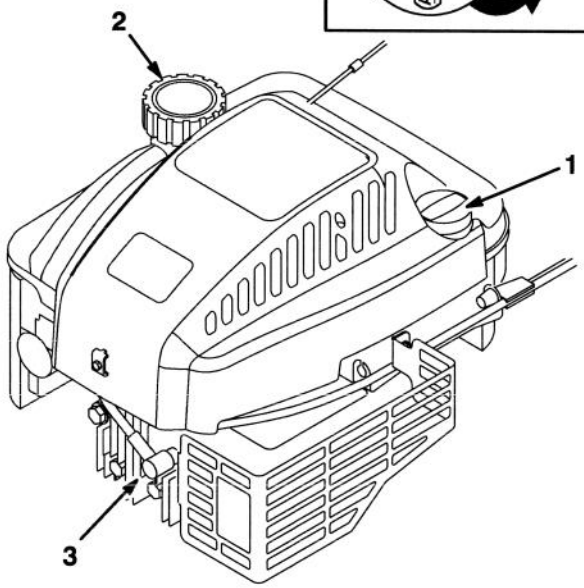

1626

1. Dipstick
2. Fuel tank cap
3. Spark plug wire

9

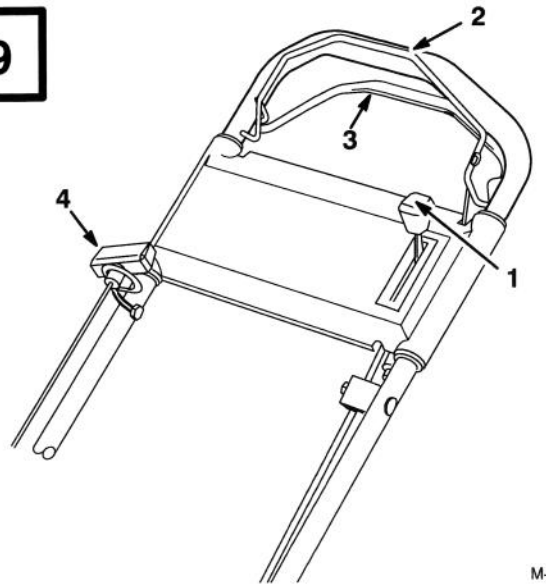

M–2947

1. Throttle
2. Blade control bar
3. Self-propel control bar*
4. Recoil starter

* Self-propelled model

10

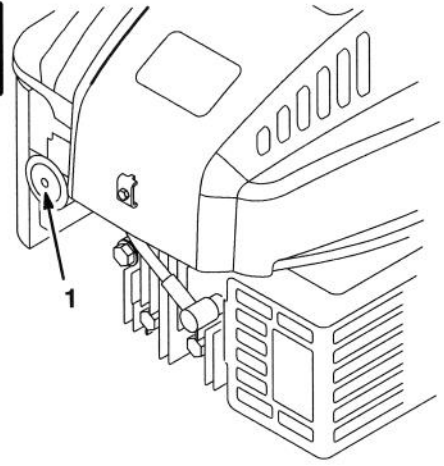

2342

1. Primer

11

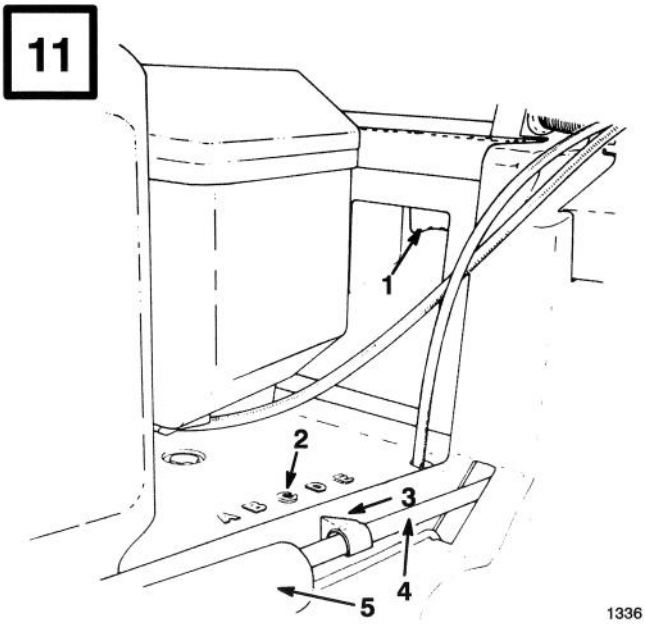

1336

1. Height-of-cut adjustment lever
2. Height settings
3. Pointer
4. Link rod
5. Spring cover

12

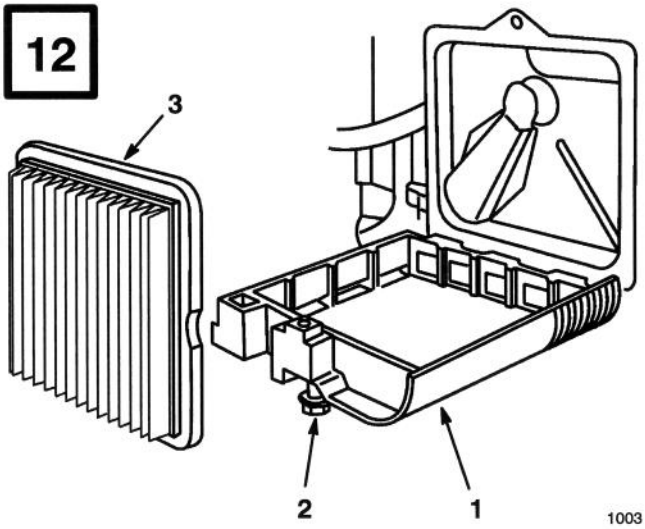

1003

1. Cover
2. Screw
3. Paper air cleaner filter

13

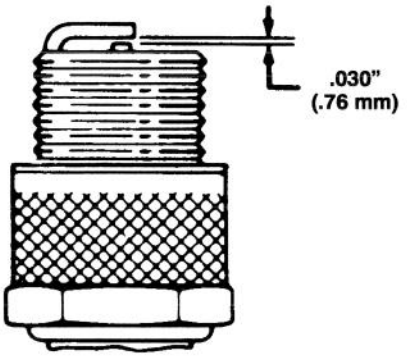

110

14

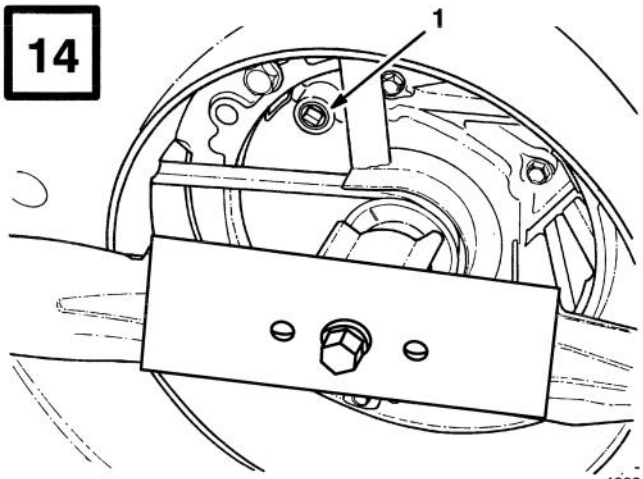

1328

1. Drain opening

15

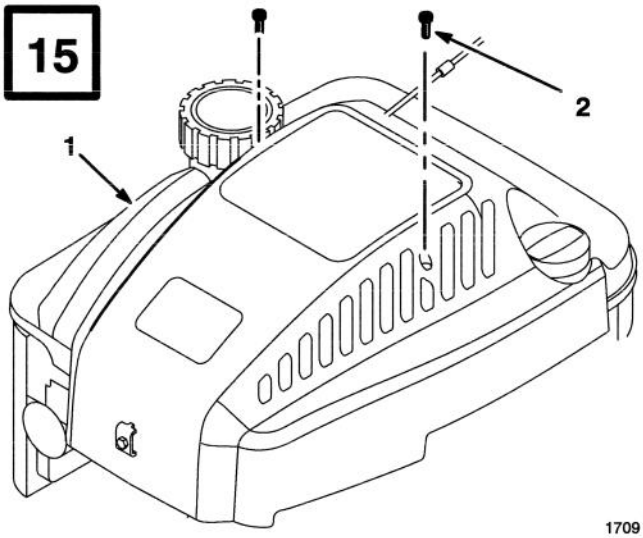

1709

1. Cover
2. Screw (2)

16

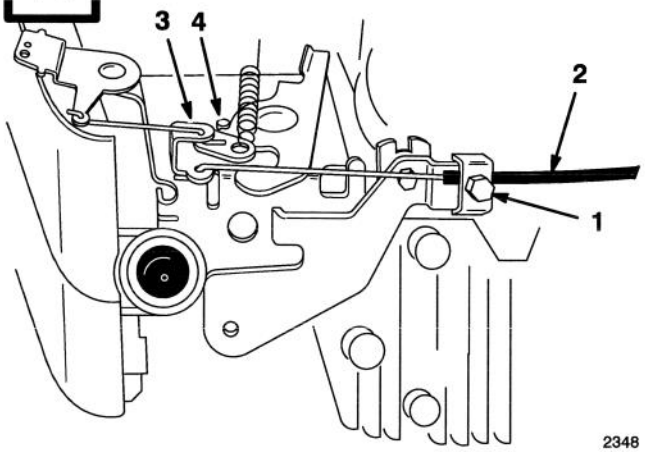

2348

1. Cable clamp screw
2. Throttle cable
3. Throttle lever
4. Stop

17

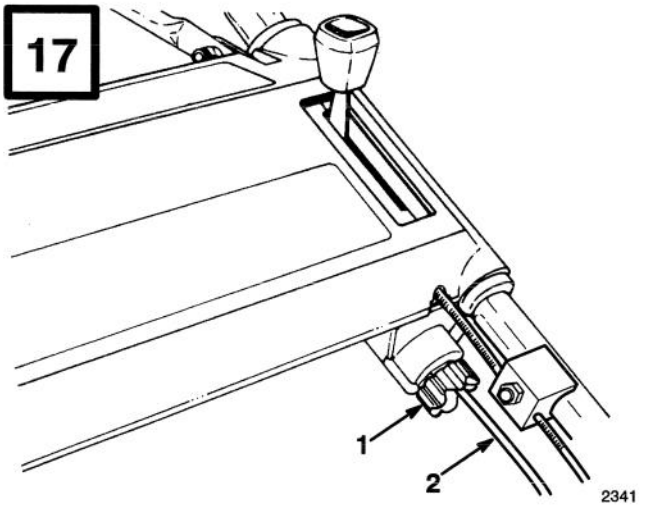

2341

1. Adjustment knob
2. Control cable

18

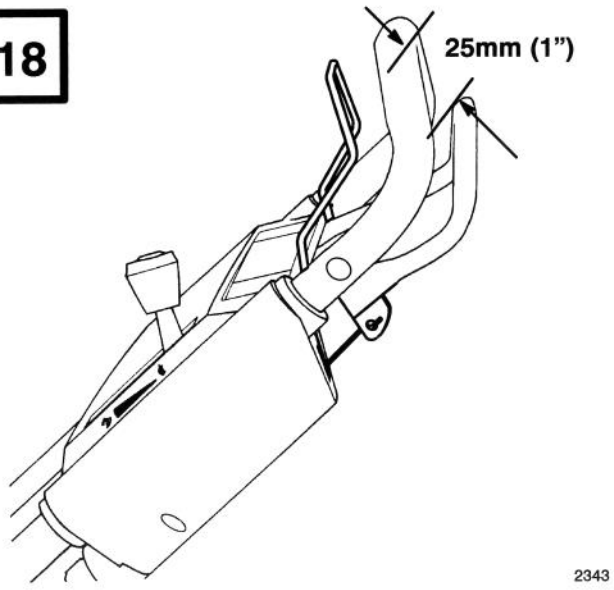

2343

19

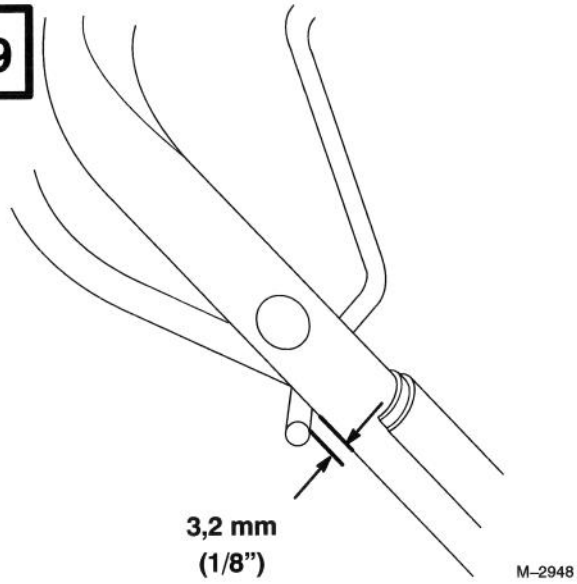

M–2948

Self-propelled model shown

20

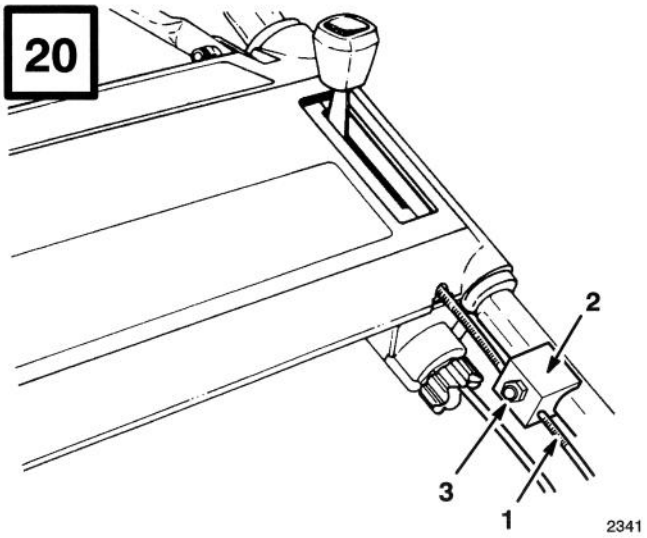

2341

Self-propelled model shown

1. Cable conduit
2. Cable bracket
3. Nut

21

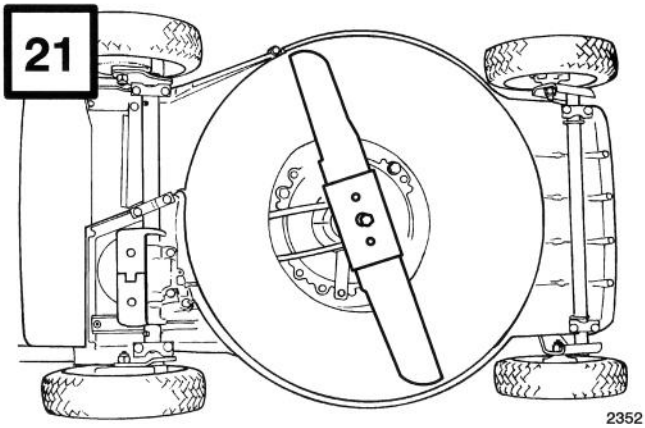

2352

22

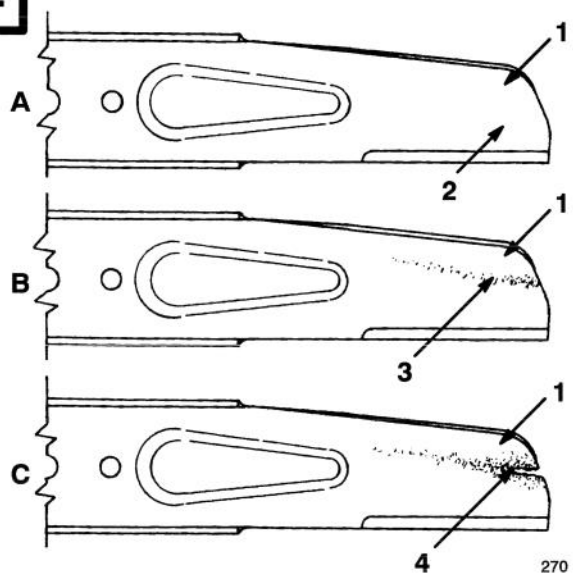

270

1. Sail
2. Flat part of blade
3. Wear
4. Slot formed

23

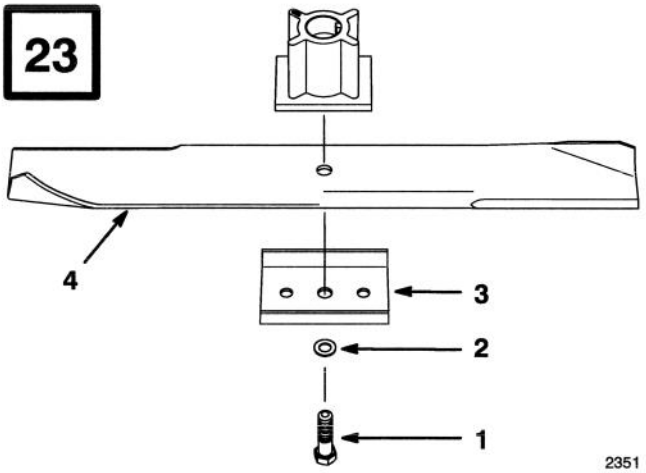

2351

1. Blade bolt
2. Lockwasher
3. Blade stiffener
4. Blade

24

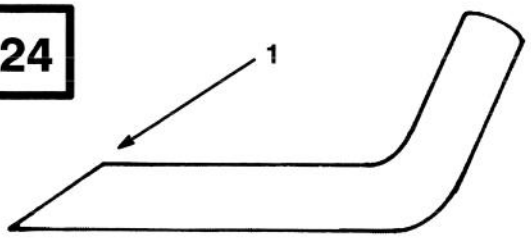

153

1. Sharpen at this angle only

25

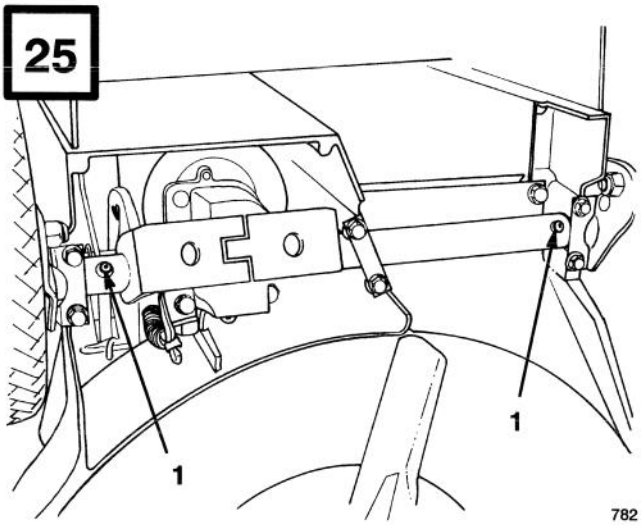

782

1. Grease fitting (self-propelled model)

Contents

	Page
Contents	1
Introduction	1
Safety	2
Training	2
Preparation	2
Operation	2
Maintenance And Storage	3
Sound Pressure Level	4
Sound Power Level	4
Vibration Level	4
Symbol Glossary	4
Assembly	7
Handle	7
Starter Rope	7
Grass Bag	7
Before Starting	7
Oil	7
Gasoline	8
Operation	9
Operating Tips	9
Starting, Stopping, and Self–propelling	9
Self-propelling (self-propelled model)	10
Using Grass Bag	10
Adjusting Height–of–cut	10
Maintenance	11
Servicing Air Cleaner	11
Replacing Spark Plug	11
Draining Gasoline	11
Changing Crankcase Oil	12
Adjusting Throttle	12
Adjusting Wheel Traction Drive (self–propelled model)	12
Adjusting Brake Cable	12
Inspecting/Removing/Sharpening Blade	12
Lubrication	13
Cleaning Mower Housing	13
Storage	14

Introduction

Thank you for purchasing a Toro product.

All of us at Toro want you to be completely satisfied with your new product, so feel free to contact your local Authorized Service Dealer for help with service, genuine Toro parts, or other information you may require.

Whenever you contact your Authorized Service Dealer or the factory, always know the model and serial numbers of your product. These numbers will help the Service Dealer or Service Representative provide exact information about your specific product. You will find the model and serial number decal located in a unique place on the product (Fig. 1).

For your convenience, write the product model and serial numbers in the space below.

Model No: _____

Serial No. _____

Read this manual carefully to learn how to operate and maintain your product correctly. Reading this manual will help you and others avoid personal injury and damage to the product. Although Toro designs, produces and markets safe, state-of-the-art products, you are responsible for using the product properly and safely. You are also responsible for training persons who you allow to use the product about safe operation.

The Toro warning system in this manual identifies potential hazards and has special safety messages that help you and others avoid personal injury, even death. DANGER, WARNING and CAUTION are signal words used to identify the level of hazard. However, regardless of the hazard, be extremely careful.

DANGER signals an extreme hazard that will cause serious injury or death if the recommended precautions are not followed.

WARNING signals a hazard that may cause serious injury or death if the recommended precautions are not followed.

CAUTION signals a hazard that may cause minor or moderate injury if the recommended precautions are not followed.

Two other words are also used to highlight information. "Important" calls attention to special mechanical information and "Note" emphasizes general information worthy of special attention.

The left and right side of the machine is determined by standing behind the handle in the normal operator's position.

Safety

Training

1. Read the instructions carefully. Be familiar with the controls and the proper use of the equipment.
2. Never allow children or people unfamiliar with these instructions to use the lawnmower. Local regulations may restrict the age of the operator.
3. Never mow while people, especially children, or pets are nearby.
4. Keep in mind that the operator or user is responsible for accidents or hazards occurring to other people or their property.

Preparation

1. While mowing, always wear substantial footwear and long trousers. Do not operate the equipment when barefoot or wearing open sandals.
2. Thoroughly inspect the area where the equipment is to be used and remove all objects which may be thrown by the machine.
3. WARNING – Petrol is highly flammable.
   - Store fuel in containers specifically designed for this purpose.
   - Refuel outdoors only and do not smoke while refuelling.
   - Add fuel before starting the engine. Never remove the cap of the fuel tank or add petrol while the engine is running or when the engine is hot.
   - If petrol is spilled, do not attempt to start the engine but move the machine away from the area of spillage and avoid creating any source of ignition until petrol vapors have dissipated.
   - Replace all fuel tanks and container caps securely.
4. Replace faulty silencers.
5. Before using, always visually inspect to see that the blades, blade bolts and cutter assembly are not worn or damaged. Replace worn or damaged blades and bolts in sets to preserve balance.
6. On multi-bladed machines, take care as rotating one blade can cause other blades to rotate.

Operation

1. Do not operate the engine in a confined space where dangerous carbon monoxide fumes can collect.
2. Mow only in daylight or in good artificial light.
3. Avoid operating the equipment in wet grass, where feasible.
4. Always be sure of your footing on slopes.
5. Walk, never run.
6. For wheeled rotary machines, mow across the face of slopes, never up and down.
7. Exercise extreme caution when changing direction on slopes.

8. Do not mow excessively steep slopes.

9. Use extreme caution when reversing or pulling the lawnmower towards you.

10. Stop the blade(s) if the lawnmower has to be tilted for transportation when crossing surfaces other than grass, and when transporting the lawnmower to and from the area to be mowed.

11. Never operate the lawnmower with defective guards or shields, or without safety devices, for example deflectors and/or grass catchers, in place.

12. Do not change the engine governor settings or overspeed the engine.

13. Disengage all blade and drive clutches before starting the engine.

14. Start the engine or switch on the motor carefully according to instructions and with feet well away from the blade(s).

15. Do not tilt the lawnmower when starting the engine or switching on the motor, except if the lawnmower has to be tilted for starting. In this case, do not tilt it more than absolutely necessary and lift only the part which is away from the operator.

16. Do not start the engine when standing in front of the discharge chute.

17. Do not put hands or feet near or under rotating parts. Keep clear of the discharge opening at all times.

18. Never pick up or carry a lawnmower while the engine is running.

19. Stop the engine and disconnect the spark plug wire

    - before clearing blockages or unclogging chute;
    - before checking, cleaning or working on the lawnmower;
    - after striking a foreign object. Inspect the lawnmower for damage and make repairs before restarting and operating the lawnmower;
    - if lawnmower starts to vibrate abnormally (check immediately).

20. Stop the engine

    - whenever you leave the lawnmower;
    - before refuelling.

21. Reduce the throttle setting during engine shut down and, if the engine is provided with a shut-off valve, turn the fuel off at the conclusion of mowing.

22. Go slow when using a trailing seat.

23. Always wear safety glasses or eye shields during operation to protect eyes from foreign objects that may be thrown from the machine. Wearing of hearing protection, protective gloves and a safety helmet is advisable.

Maintenance And Storage

1. Keep all nuts, bolts and screws tight to be sure the equipment is in safe working condition.

2. Never store the equipment with petrol in the tank inside a building where fumes may reach an open flame or spark.

3. Allow the engine to cool before storing in any enclosure.

4. To reduce the fire hazard, keep the engine, silencer, battery compartment and petrol storage area free of grass, leaves, or excessive grease.

5. Check the grass catcher frequently for wear or deterioration.

6. Replace worn or damaged parts for safety.

7. If the fuel tank has to be drained, this should be done outdoors.

Sound Pressure Level

This unit has an equivalent continuous A-weighted sound pressure at the operator ear of: 81 dB(A), based on measurements of identical machines per ANSI B71.5-1984 procedures.

Sound Power Level

This unit has a sound power level of: 96 dB(A)/1 pW, based on measurements of identical machines per Directive 84/538/EEC and amendments.

Vibration Level

Model 20913

This unit has a maximum hand-arm vibration level of 9.27 m/s^2, based on measurement of identical machines per ISO 5349 procedures.

Model 20914

This unit has a maximum hand-arm vibration level of 5.89 m/s^2, based on measurement of identical machines per ISO 5349 procedures.

Symbol Glossary

Safety alert triangle — symbol within triangle indicates a hazard.



Safety alert symbol



Read operator's manual.



Consult technical manual for proper service procedures.



Stay a safe distance from the machine.

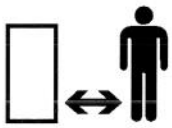

Stay a safe distance from the mower.



Do not open or remove safety shields while engine is running.



Rotating blade can cut off toes or fingers. Stay clear of mower blade as long as engine is running.



To avoid blade failure when mulching, use blade stiffener when mower is equipped with mulching plug.



Transmission



Oil



On/Run



Throw or flying objects — Whole body exposure



Thrown or flying objects — Rotary side-mounted mower. Keep deflector shield in place.



Stop engine before leaving operator position.



Hourmeter/elapsed operating hours

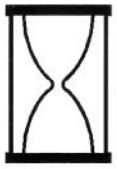

Fast



Slow



Decreasing/Increasing



Grease lubrication point



Engage

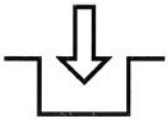

Disengage

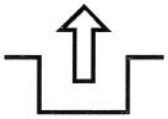

Battery charging condition

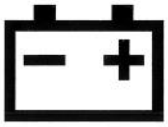

Fuel



Neutral

N

First gear

1

Second gear

2

Third gear

3

Engine start

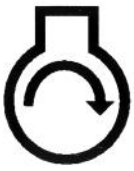

Cutting element — basic symbol



Engine stop



Choke

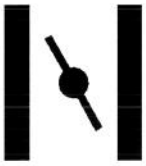

Primer (start aid)



Push primer three times.

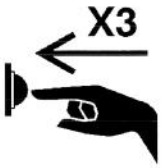

Properly dispose of batteries.



Insert key in ignition switch.

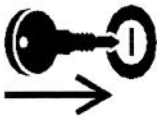

Turn key in ignition switch.



Move control.



Cutting element — height adjustment



Pull rope.



Wheel



Wheel traction



Lower control bar.



Raise control bar.



Raise/lower control bar.



Raise/lower control bar.



Raise control bar.



Lower control bar.



Raise control bar.



Assembly

Handle

1. Loosen knobs on mounting brackets (Fig. 2).

2. Position mounting brackets in a vertical position so that holes face up.

3. Slide handle ends into holes in mounting brackets until handle ends are completely seated in brackets (Fig. 2). Make sure throttle cable and traction cable (self–propelled model) are positioned on top of left mounting bracket (Fig. 3).

4. Rotate handle and mounting brackets rearward until brackets fit securely into housing pockets (Fig. 3).

5. Tighten knobs until edges of slots on top of mounting brackets touch.

6. Use cable tie to secure cable(s) to lower side of left hand tube (Fig. 4). Cable tie should be positioned 25 mm (1") from bend in handle. See Figure 4 for correct cable placement.

7. Cut excess length from cable tie on lower left handle.

   Note: Make sure cable(s) do not interfere with the raising or lowering of discharge door.

Starter Rope

1. Pull the starter rope through the rope guide on the handle (Fig. 5). To make the rope easier to loop, squeeze the top control bar on the handle to release the blade brake.

Grass Bag

1. Raise discharge door, slide bag ramp attached to bag into discharge opening, and hook bag frame onto rounded portion of mounting brackets (Fig. 6).

   Note: Make sure grass bag door is **fully** closed against grass bag before installing bag on mower.

2. Allow discharge door to rest on top of bag (Fig. 7).

Before Starting

Oil

Initially, crankcase must be filled with 0.6 liters (20 ounces) of SAE 30 oil. 10W–30 oil may be substituted if SAE 30 is not available. Use any high quality detergent oil having the American Petroleum Institute (API) "service classification"—SF, SG or SH.

Before each use, assure oil level is between ADD and FULL mark (Fig. 8). Add oil if level is low.

1. Position mower on level surface and clean around oil dipstick.

2. Remove dipstick by rotating cap counterclockwise 1/4 turn.

3. Wipe dipstick and insert it into filler neck. Rotate cap 1/4 turn. Then remove dipstick and check level of oil (Fig. 8). If level is low, add only enough oil to raise level to FULL mark on dipstick. **DO NOT FILL ABOVE FULL MARK BECAUSE ENGINE COULD BE DAMAGED WHEN STARTED. POUR OIL SLOWLY.**

   Note: Check oil level each time mower is used or after every 5 hours of mower operation. Initially, change oil after the first 2 hours of operation; thereafter, change oil after every 25 hours of operation. More frequent oil changes are required in dusty or dirty conditions.

4. Insert dipstick into filler neck and rotate cap clockwise 1/4 turn to lock it in place.

Gasoline

⚠ DANGER

POTENTIAL HAZARD
- **In certain conditions gasoline is extremely flammable and highly explosive.**

WHAT CAN HAPPEN
- **A fire or explosion from gasoline can burn you, others, and cause property damage.**

HOW TO AVOID THE HAZARD
- **Use a funnel and fill the fuel tank outdoors, in an open area, when the engine is cold. Wipe up any gasoline that spills.**
- **Do not fill the fuel tank completely full. Add gasoline to the fuel tank until the level is 6–13 mm (1/4″–1/2″) below the bottom of the filler neck. This empty space in the tank allows gasoline to expand.**
- **Never smoke when handling gasoline, and stay away from an open flame or where gasoline fumes may be ignited by a spark.**
- **Store gasoline in an approved container and keep it out of the reach of children.**
- **Never buy more than a 30-day supply of gasoline.**

Note: Do not use gasoline that has been stored in an approved container from one season to the next. The Toro Company strongly recommends the use of fresh, clean **UNLEADED** regular grade gasoline in Toro gasoline powered products. Unleaded gasoline burns cleaner, extends engine life, and promotes good starting by reducing the build-up of combustion chamber deposits. Leaded gasoline can be used if unleaded is not available.

Toro also recommends that Toro Stabilizer/Conditioner be used regularly in all Toro gasoline powered products during operation and storage seasons. Toro Stabilizer/Conditioner cleans the engine during operation and prevents gum-like varnish deposits from forming in the engine during periods of storage.

1. Pull wire off spark plug (Fig. 8).

2. Clean around fuel tank cap and remove cap from tank (Fig. 8).

3. Using unleaded gasoline, fill fuel tank to within 6–13 mm (1/4″–1/2″) from the top of tank, not into filler neck. Do not fill tank full.

4. Reinstall fuel tank cap and wipe up any spilled gasoline.

   IMPORTANT: DO NOT MIX OIL WITH THE GASOLINE. NEVER USE METHANOL, GASOLINE CONTAINING METHANOL, GASOHOL CONTAINING MORE THAN 10% ETHANOL OR WHITE GAS BECAUSE ENGINE FUEL SYSTEM DAMAGE COULD RESULT.

   DO NOT USE FUEL ADDITIVES OTHER THAN THOSE MANUFACTURED FOR FUEL STABILIZATION DURING STORAGE SUCH AS TORO'S STABILIZER/CONDITIONER OR A SIMILAR PRODUCT. TORO'S STABILIZER/CONDITIONER IS A PETROLEUM DISTILLATE BASED CONDITIONER/STABILIZER. TORO DOES NOT RECOMMEND STABILIZERS WITH AN ALCOHOL BASE SUCH AS ETHANOL, METHANOL OR ISOPROPYL. ADDITIVES SHOULD NOT NOT BE USED TO TRY TO ENHANCE THE POWER OR PERFORMANCE OF MACHINE.

5. Connect spark plug wire (if disconnected) (Fig. 8).

Operation

Operating Tips

1. CHECK OIL LEVEL—Maintain oil level between ADD and FULL range as shown on dipstick (Fig. 8).

2. CUTTING AND BAGGING—Best results are achieved when only about 1/3 of the grass blade is cut. If long grass must be cut, use highest height–of–cut setting (E) for first mowing. Then recut the grass at a more normal setting. If too long of grass is cut, mower may plug and cause engine to stall.

   When cutting in dry, dusty conditions move the throttle to a slower speed to reduce the amount of dust generated by mower.

3. SHARP BLADE—Begin each cutting season with a sharp blade. Periodically file down nicks.

Starting, Stopping, And Self–propelling

CONTROLS—Throttle, blade control bar and self–propel control bar (self–propelled model only), and recoil starter are on upper handle (Fig. 9).

Starting

1. Push spark plug wire onto spark plug (Fig. 8).

2. Move throttle forward to FAST position.

3. Push primer (Fig. 10) three times. Wait about two seconds between each push.

   Note: Do not use primer to restart a warm engine after a short shutdown.

4. Squeeze blade control bar against handle.

5. Pull recoil starter out until slack in rope is taken up. Then pull vigorously to start the engine.

6. When engine starts, regulate engine speed as desired.

Stopping

1. To stop engine, release blade control bar.

2. Pull wire off spark plug if mower will be unattended or not used.

Self-propelling (self-propelled model)

The mower is equipped with a single ground speed. When the self-propel control bar is tight against the handle, the mower will self-propel at maximum ground speed. Ground speed varies depending on space between self-propel control bar and handle.

1. To self–propel the mower, squeeze the self-propel control bar against the handle. To stop the self–propel drive, release the self-propel control bar.

   Note: The drive wheels are equipped with freewheeling clutches which enable the mower to be pulled rearward easier when the wheel drive is disengaged. To disengage the clutches, mower must be pushed forward at least 2.5 cm (1") after wheel drive operation has stopped.

Using Grass Bag

1. Stop engine and wait for all parts to stop.

2. INSTALLING BAG—Raise discharge door, slide bag ramp attached to bag into discharge opening, and hook bag frame onto mounting bracket (Fig. 6). Allow discharge door to rest on top of bag (Fig. 7).

   Note: Make sure grass bag door is **fully** closed against grass bag before installing bag on mower.

3. REMOVING BAG—**Stop engine and wait for all moving parts to stop.** For protection, always keep hands and feet away from mower housing while engine is running. Raise discharge door. While holding discharge door up, grasp handle on grass bag and lift bag off mower. Allow discharge door to close.

   Note: When removing the grass bag, the bag ramp scoops out any clippings that may be plugging the discharge opening. If the discharge opening remains plugged, clear all clippings from the mower.

4. EMPTYING BAG—Grasp bag frame handle and rear of grass bag. Tip bag door up and gradually tip bag forward to empty clippings.

⚠ DANGER

POTENTIAL HAZARD
- **Grass clippings and other objects can be thrown from an open discharge tunnel.**

WHAT CAN HAPPEN
- **Objects thrown with enough force could cause serious personal injury or death to operator or bystander.**

HOW TO AVOID THE HAZARD
- **Never open door on discharge tunnel when engine is running unless the grass bag is securely installed.**

⚠ DANGER

POTENTIAL HAZARD
- **A worn grass bag could allow small stones and other similar debris to be thrown in operator's or bystander's direction.**

WHAT CAN HAPPEN
- **Thrown objects can cause serious personal injury or death to operator or bystanders.**

HOW TO AVOID THE HAZARD
- **Check the grass bag frequently. If it is damaged, install a new genuine TORO replacement bag.**

Adjusting Height–of–cut

The five letters on the belt cover represent the height–of–cut settings. All wheels automatically adjust to the same height–of–cut setting.

1. Stop the engine and pull wire off spark plug (Fig. 8).

2. Use one or two fingers to squeeze the height–of–cut adjustment lever (Fig. 11).

   To raise the wheel height, squeeze the lever to unlock the height–of–cut and pull up on the mower. Release lever when desired height is found. To lower the height, squeeze the height–of–cut adjustment lever and push down on the mower **while rolling the mower forward**. Use the pointer on the link rod to locate the correct setting.

3. Make sure the height adjustment lever is locked into a height setting before beginning operation. The height should not change when the height–of–cut is locked.

Maintenance

⚠ CAUTION

POTENTIAL HAZARD
- **Engine could start accidentally.**

WHAT CAN HAPPEN
- **Accidental starting of engine could cause serious injury to operator or bystanders.**

HOW TO AVOID THE HAZARD
- **Pull wire off spark plug before performing any maintenance or adjustments.**

Servicing Air Cleaner

Normally, replace air cleaner after every 25 operating hours. More frequent replacing is required when mower is operated in dusty or dirty conditions. See your Authorized Toro Service Dealer for replacement parts.

1. Stop engine and pull wire off spark plug (Fig. 8).

2. Remove screw securing air cleaner cover to engine (Fig. 12). Tilt air cleaner cover down and clean cover thoroughly.

3. Remove paper air cleaner filter (Fig. 12) and discard.

4. Insert a new paper air cleaner filter.

5. Reinstall air cleaner cover and secure with screw.

   IMPORTANT: Do not operate engine without air cleaner element otherwise extreme engine wear and damage will likely result.

Replacing Spark Plug

Use a Champion RJ19LM spark plug or equivalent. Correct air gap is 0.76 mm (0.030"). Remove plug after every 25 operating hours and check its condition.

1. Stop engine and pull wire off spark plug (Fig. 8).

2. Clean around spark plug and remove plug from cylinder head.

   IMPORTANT: Replace a cracked, fouled, or dirty spark plug. Do not sand blast, scrape, or clean electrodes because engine damage could result from grit entering cylinder.

3. Set air gap at 0.76 mm (0.030") (Fig. 13). Install correctly gapped spark plug and gasket seal. Tighten plug firmly to 20 N·m (15 ft–lb).

Draining Gasoline

1. Stop engine and wait for engine to cool. Pull wire off spark plug (Fig. 8).

   Note: Drain gasoline from a cold engine only.

2. Remove cap from fuel tank (Fig. 8) and use pump-type syphon to drain fuel into clean gas can.

   Note: This is the only procedure recommended for draining fuel.

Changing Crankcase Oil

Change oil after the first 2 operating hours and after every 25 hours thereafter. Since warm oil drains better and carries more contaminants than cold, run engine for several minutes or so before draining oil.

1. Stop engine and pull wire off spark plug (Fig. 8).
2. Lift discharge door and remove grass bag. Drain gasoline from fuel tank: refer to Draining Gasoline, page 11.
3. Tip mower on its left side. Remove drain plug from underside of mower using a 3/8" socket extension with a wrench for turning (Fig.14). Place a drain pan under mower.
4. Lower mower allowing oil to drain into pan.
5. After draining, clean drain plug and reinstall it. Wipe up any spilled oil. Fill engine with fresh oil: refer to Oil, page 7.

Adjusting Throttle

1. Throttle control adjustment may be required if engine does not start or stop. Whenever a new throttle control cable is installed, the throttle must be adjusted.
2. Stop engine and pull wire off spark plug (Fig. 8).
3. Remove two screws from engine cover and lift off cover (Fig. 15).
4. Move throttle control forward to FAST  position (Fig. 9).
5. Loosen cable clamp screw until throttle cable slides (Fig. 16).
6. Move throttle cable until throttle lever contacts stop (Fig. 16).
7. Tighten cable clamp screw to lock adjustment in place.
8. Reinstall engine cover with two screws. Torque screws to 8-10 in-lbs (.9-1.1 N·m).

Adjusting Wheel Traction Drive (self–propelled model)

If mower does not self–propel or has a tendency to creep forward when drive is not engaged, an adjustment to the wheel traction control cable is necessary.

1. Stop the engine.
2. Rotate adjustment knob (Fig. 17) 1/2 turn clockwise to tighten drive belt or 1/2 turn counterclockwise to loosen belt. Hold control cable while rotating to prevent cable from turning.
3. To check traction adjustment, slowly squeeze the self-propel control bar toward the handle. The traction is adjusted correctly when resistance is felt when the self–propel control bar is approximately 25 mm (1") from upper handle (Fig. 18).
4. If loss of traction or improper engagement still occurs after readjustment, repeat steps 2–3 until properly adjusted.

Adjusting Brake Cable

Whenever a new blade brake cable assembly is installed, an adjustment is required.

1. Stop engine. Pull wire off spark plug.
2. CHECK ADJUSTMENT (Fig. 19)–Move the blade control bar toward the handle until the slack in the wire is removed. The gap between the blade control bar and the handle must be 3.2 mm (1/8").
3. ADJUST CABLE (Fig. 20)–Loosen the nut on the cable bracket. Insert a 3.2 mm (1/8") object between the brake control bar and handle. Pull down on the cable conduit until all slack is removed from the wire. Then tighten the nut on cable bracket.

Inspecting/Removing/ Sharpening Blade

1. Stop engine and pull wire off spark plug (Fig. 8).

2. Drain gasoline from fuel tank; refer to Draining Gasoline, page 11.

3. Tip mower on its left side (Fig. 21). Avoid rotating blade as starting problems may result.

4. INSPECTING BLADE—Carefully examine blade for sharpness and wear, especially where flat and curved parts meet (Fig. 22A). Since sand and abrasive material can wear away the metal that connects the flat and curved parts of the blade, check blade before using the mower. If a slot or wear is noticed, (Fig. 22B & C), replace blade with a new TORO blade. Refer to step 5.

   Note: For optimum performance, install a new TORO blade before cutting season begins. During the year, file down small nicks to maintain the cutting edge.

⚠ DANGER

POTENTIAL HAZARD
- **A worn or damaged blade could break and a piece of blade could be thrown into operator's or bystander's area.**

WHAT CAN HAPPEN
- **A thrown piece of blade could cause serious personal injury or death to operator or bystanders.**

HOW TO AVOID THE HAZARD
- **Inspect blade periodically for wear or damage.**
- **Replace a worn or damaged blade.**

5. REMOVING BLADE—Grasp end of blade using a rag or thickly padded glove. Remove blade bolt, lockwasher, blade stiffener, and blade (Fig. 23).

6. SHARPENING BLADE—Using a file, sharpen top side of blade (side facing top of mower housing) and maintain original cutting angle (Fig. 24). The blade remains balanced if the same amount of material is removed from both cutting edges.

   IMPORTANT: Check balance of blade by putting it on a blade balancer. An inexpensive balancer can be purchased at a hardware store. A balanced blade stays in a horizontal position and an unbalanced blade settles to the heavy side. If blade is not balanced, file more metal off cutting edge on heavy end of blade.

7. Install sharp, balanced TORO blade, blade stiffener, lockwasher, and blade bolt. Sail part of blade must point toward top of mower housing to ensure correct installation. Tighten blade bolt to 60-80 N·m (45-60 ft-lb).

Lubrication

After every 25 operating hours or when season ends, front and rear wheels must be lubricated.

1. Apply 1 or 2 drops of light oil on inside and outside of all wheel bolts. Spin wheels to distribute oil into bushings. Wipe up excess oil.

2. SELF–PROPELLED MODEL—Drain gasoline; refer to Draining Gasoline, page 11.

3. Set mower to highest height-of-cut setting (E).

4. Tip mower on its left side. Wipe grease fittings with clean rag (Fig. 25). Install grease gun onto fitting and gently apply two or three pumps of #2 Multi-Purpose Lithium Base Grease.

Cleaning Mower Housing

To ensure optimum performance, keep underside of mower housing and inside of discharge area clean.

1. Drain gasoline from fuel tank: refer to Draining Gasoline, page 11.

2. Tip mower on its left side (Fig. 21). Avoid rotating blade because starting problems may result.

3. Remove dirt and grass clippings that stick to housing by spraying it with a garden hose. Scrape out remaining debris with hardwood scraper. Avoid burrs and sharp edges.

4. Clean discharge door and hinges of grass or debris that may impair operation of door.

Storage

1. For long term storage, it is recommended that gasoline be drained from fuel tank or use a fuel additive before storing. To drain gasoline, refer to Draining Gasoline, page 11. After fuel is drained, start engine and let it idle until all fuel is consumed and engine stops. If gasoline is not drained, gum–like varnish deposits will form and cause poor engine operation or even starting problems.

   Fuel can be left in gas tank only if a fuel additive, such as Toro's Stabilizer/Conditioner, is added to gasoline and run through engine before storing. Toro's Stabilizer/Conditioner is a petroleum distillate based conditioner/stabilizer. Toro does not recommend stabilizers with an alcohol base, such as ethanol, methanol or isopropyl. Use fuel additive in recommended quantities as specified on container.

   Under normal conditions, fuel additives remain effective in fuel for 6-8 months.

2. Drain oil: refer to Changing Crankcase Oil, page 12. After oil is drained, do not fill crankcase with oil until the following steps (3–10) are completed.

3. Remove spark plug and pour 30 ml (2 tablespoons) of SAE 30 oil into hole in cylinder. Pull starter rope slowly to coat inside of cylinder. Install spark plug and tighten to 20 N·m (15 ft–lb). **DO NOT INSTALL WIRE ON SPARK PLUG.**

4. Clean mower housing; refer to Cleaning Mower Housing, page 13.

5. Check condition of blade; refer to Inspecting/Removing/Sharpening Blade, page 12.

6. Tighten all nuts, bolts, and screws.

7. Clean dirt, chaff, grass clippings, and grime from external parts of the engine, shrouding, and top of mower housing.

8. Clean air cleaner; refer to Servicing Air Cleaner, page 11.

9. Lubricate the wheels; refer to Lubrication, page 13.

10. Touch up all rusted or chipped paint surfaces. Toro Re–Kote paint is available from an Authorized TORO Service Dealer.

11. Fill crankcase with oil; refer to Oil, page 7.

12. Store mower in a clean, dry place. Cover mower to keep it clean and protected.


TORO®