Form No. 3402-199 Rev A

CE Guard Kit

for Greensmaster® 3420 TriFlex® Traction Unit

Model No. 04443

Installation Instructions

You must install this kit on your Greensmaster 3420 TriFlex traction unit to meet CE compliance.

Installation

1. Park the machine on a level surface, lower the cutting units, shut off the engine, set the parking brake, and remove the ignition key.
2. Attach the upper radiator guard to the top of the radiator using 2 bolts (Figure 1).
3. Slide 2 of the clips onto the radiator bracket as shown in Figure 1.
4. Slide the remaining clip onto the radiator shroud as shown in Figure 1.
5. Attach the rear guard using the 3 remaining bolts (Figure 1).

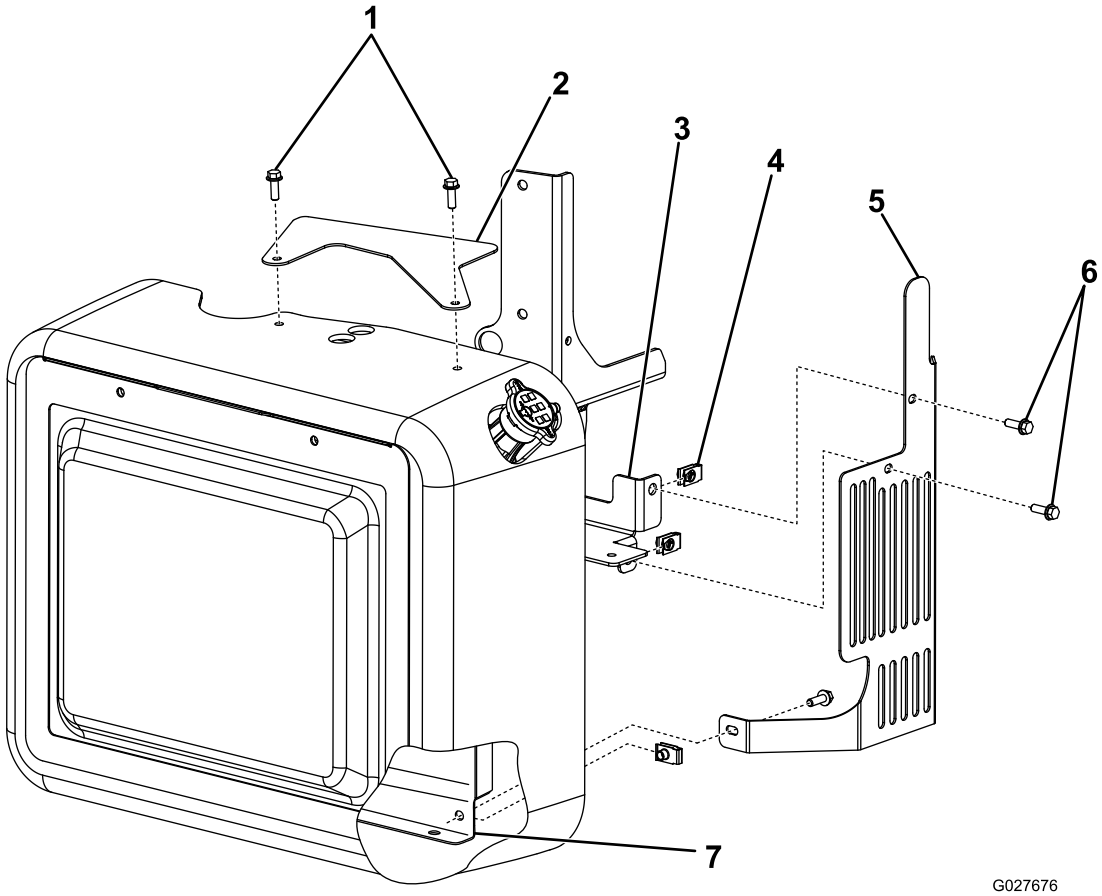

Figure 1

1. Bolts
2. Upper radiator guard
3. Radiator bracket
4. Clip
5. Radiator guard
6. Bolts
7. Radiator shroud

© 2015—The Toro® Company
8111 Lyndale Avenue South
Bloomington, MN 55420

Register at www.Toro.com.

CE

Original Instructions (EN)
Printed in the USA
All Rights Reserved

3402-199 A

6. Insert the side tabs of the inner guard into the engine bell housing (Figure 2).
7. Attach the outer guard to the inner guard using 2 flange-head nuts (Figure 2).

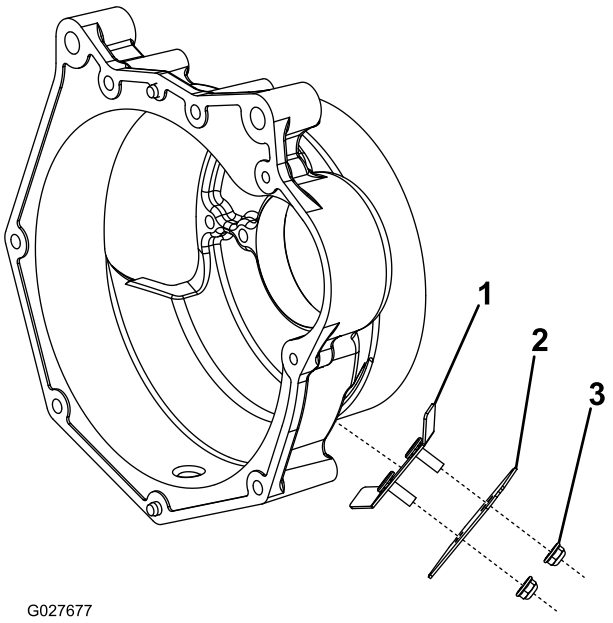

Figure 2

1. Inner guard
2. Outer guard
3. Flange-head nut