Form No. 3402-210 Rev A

LED Light Kit

2012 and After Greensmaster® 800, 1000, and 1600 Series Mower

Model No. 04294

Installation Instructions

⚠ WARNING

CALIFORNIA
Proposition 65 Warning

This product contains a chemical or chemicals known to the State of California to cause cancer, birth defects, or reproductive harm.

Important: **Ensure that you have installed the Light Kit and Hour Meter Wire Harness Kit for 2012 and After (Model 04295) before you install the LED light kit.**

Note: Determine the left, right, front, and back sides of the machine from the normal operating position.

Loose Parts

Use the chart below to verify that all parts have been shipped.

Procedure	Description	Qty.	Use
1	No parts required	–	Prepare the machine.
2	Right light-bar strap Spacer Flange-head bolt (3/8 x 1-1/4 inches) Left light-bar strap Flange-head bolt (5/16 x 1 inch) Washer (5/16 inch) Flange locknut (5/16 inch) Spring post (1-3/4 inches) Screw (5/16 x 2-3/4 inches)	1 4 4 1 2 2 2 1 1	Install the light bar to the machine.
3	LED light Harness Shield Cable tie	2 1 2 7	Assemble the LED lights to the light bar.
4	No parts required	–	Install the wire harness to the machine.
5	No parts required	–	Connect the spark-plug wire.

© 2015—The Toro® Company
8111 Lyndale Avenue South
Bloomington, MN 55420

Register at www.Toro.com.

CE

Original Instructions (EN)
Printed in the USA
All Rights Reserved

3402-210 A

1

Preparing the Machine

No Parts Required

Procedure

1. Ensure the reel drive engagement lever is in the REEL-DRIVE OFF position; refer to the *Operator's Manual*.
2. Move the machine to a level surface and set the traction drive engagement lever to the TRACTION-DRIVE NEUTRAL position; refer to the *Operator's Manual*.
3. Set the throttle control to the SLOW position and set the on-off switch to the OFF position; refer to the *Operator's Manual*.
4. Remove the spark-plug wire from the terminal of the spark plug (Figure 1).

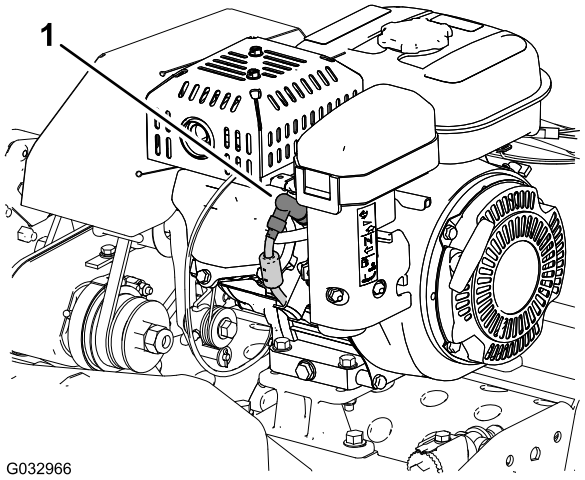

Figure 1

1. Spark-plug wire

2

Installing the Light Bar to the Machine

Parts needed for this procedure:

1	Right light-bar strap
4	Spacer
4	Flange-head bolt (3/8 x 1-1/4 inches)
1	Left light-bar strap
2	Flange-head bolt (5/16 x 1 inch)
2	Washer (5/16 inch)
2	Flange locknut (5/16 inch)
1	Spring post (1-3/4 inches)
1	Screw (5/16 x 2-3/4 inches)

Installing the Light Bar Straps to the Machine

Note: Have another person help support the handle bar while you install the light bar to the machine.

1. With the kickstand up, remove the locknut, washer, spacer, and screw (5/16 x 1 inch) securing each side of the kickstand to the side plates (A of Figure 2).

   Note: Retain the locknuts, washers, spacers, and screws (5/16 x 1 inch) for installation in step 13.

2. Remove the spring from the spring post (1 inch) of the kickstand (B of Figure 2).

   Note: Allow the kickstand to rotate to the ground.

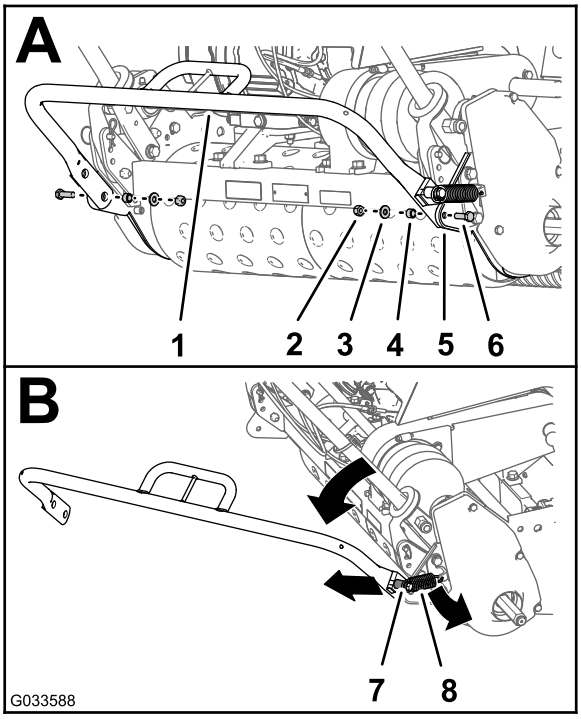

Figure 2

1. Kickstand
2. Locknut
3. Washer
4. Spacer
5. Side plate
6. Screw (5/16 x 1 inch)
7. Spring post (1 inch)
8. Spring

3. Remove the flange nut, washer, existing spring post (1 inch), and screw (5/16 x 2 inches) from the right side of the kickstand (A of Figure 3).

   Note: Discard the screw (5/16 x 2 inches) and spring post (1 inch). Retain the flange nut and washer for installation in step 5.

4. Install the new spring post (1-3/4 inches) on the kickstand with the new screw (5/16 x 2-3/4 inches); as shown in B of Figure 3.

5. Use the flange nut and washer that you retained in step 3 to secure the spring post to the kickstand (B of Figure 3).

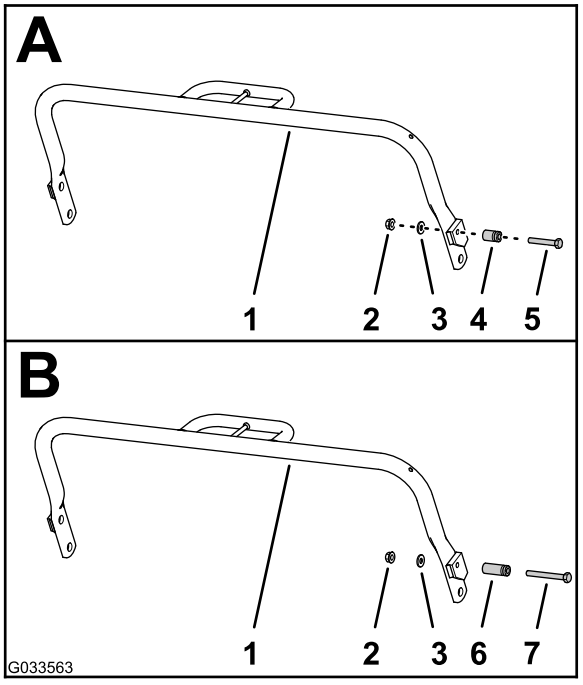

Figure 3

1. Kickstand
2. Flange nut
3. Washer
4. Existing spring post (1 inch)
5. Existing screw (5/16 x 2 inches)
6. New spring post (1-3/4 inches)
7. New screw (5/16 x 2-3/4 inches)

6. Remove the 2 bolts (3/8 x 7/8 inch) and 2 lock washers (3/8 inch) that secure the spring-anchor bracket and right-side plate to the outer pad of the rear frame of the machine (Figure 4).

   Note: Discard the bolts; retain the spring, spring-anchor bracket, and 2 lock washers for installation in step 7.

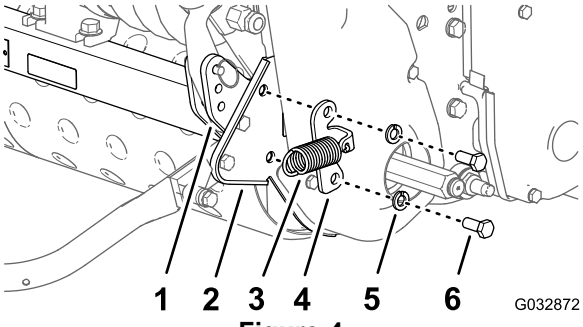

Figure 4

1. Outer pad (rear frame—machine)
2. Right-side plate
3. Spring
4. Spring-anchor bracket
5. Lock washer (3/8 inch)
6. Bolt (3/8 x 7/8 inch)

7. Assemble the spring-anchor bracket, right light-bar strap, 2 spacers, and right-side plate to the outer pad of the rear frame (Figure 5) with the 2 flange-head bolts (3/8 x 1-1/4 inches) and 2 lock washers (3/8 inch) that you removed in step 6.

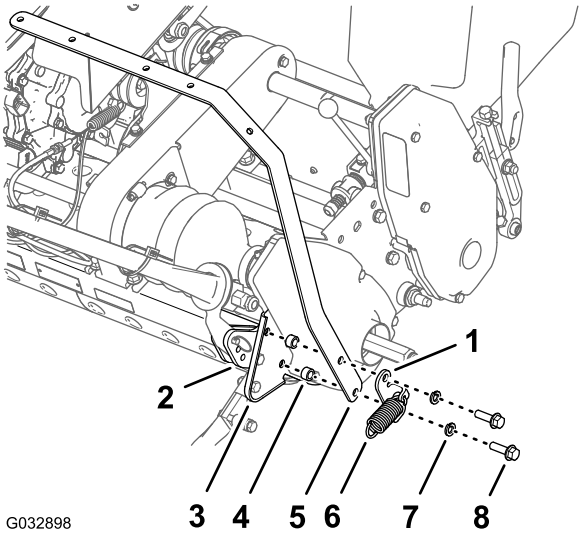

Figure 5

1. Spring-anchor bracket
2. Outer pad (rear frame—machine)
3. Right-side plate
4. Spacer
5. Right light-bar strap
6. Spring
7. Lock washer (3/8 inch)
8. Flange-head bolt (3/8 x 1-1/4 inches)

8. Remove the 2 bolts (3/8 x 7/8 inch) and 2 lock washers (3/8 inch) that secure the left-side plate to the outer pad of the rear frame of the machine (Figure 6).

Note: Discard the bolts; retain the 2 lock washers for installation in step 9.

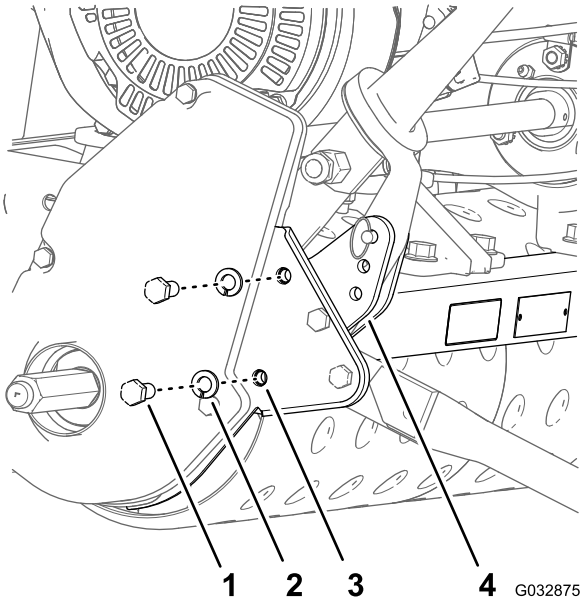

Figure 6

1. Bolt (3/8 x 7/8 inch)
2. Lock washer (3/8 inch)
3. Right-side plate
4. Outer pad (rear frame—machine)

9. Assemble the left light-bar strap, 2 spacers, and left-side plate to the outer pad of the rear frame (Figure 7) with the 2 flange-head bolts (3/8 x 1-1/4 inches) and 2 lock washers (3/8 inch—removed in step 6).

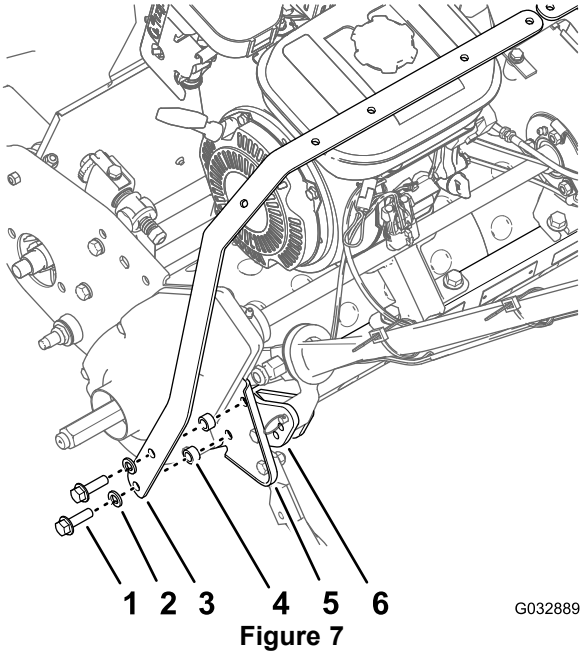

Figure 7

1. Flange-head bolt (3/8 x 1-1/4 inches)
2. Lock washer (3/8 inch)
3. Left light-bar strap
4. Spacer
5. Left-side plate
6. Outer pad (rear frame—machine)

10. Torque the 4 flange-head bolts to 33 to 45 N·m (25 to 33 ft-lb).

11. Ensure that the hook of the spring is inserted through hole in the spring-anchor bracket.
12. Seat the free end of the spring onto the spring post of the kickstand (A of Figure 8).
13. Attach the kickstand to the side plates with the locknuts, washers, spacers, and screws (5/16 x 1 inch) that you retained in step 1 (B of Figure 8).

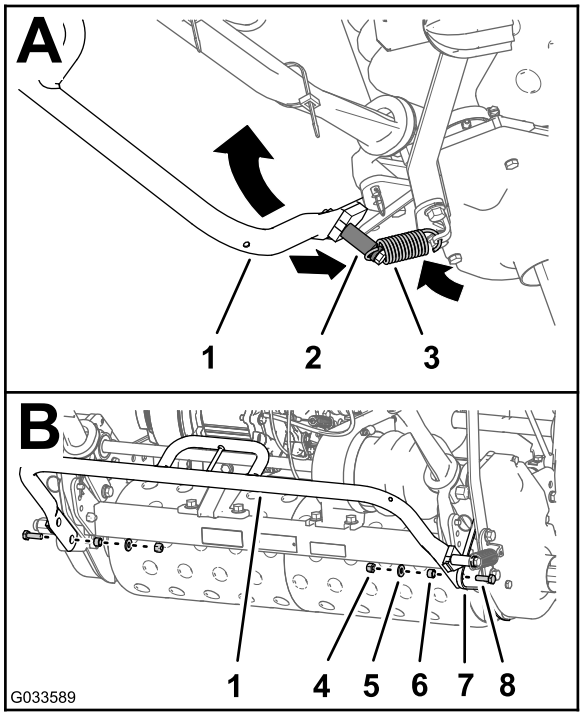

Figure 8

1. Kickstand
2. New spring post (1-3/4 inches)
3. Spring
4. Locknut
5. Washer
6. Spacer
7. Right side plate
8. Screw (5/16 x 1 inch)

Assembling the Light-Bar Straps

1. Align the holes in the light bar straps as follows:
   - **For 800 Series Machines**—align the 2 holes of the left light-bar strap and the right light-bar strap as shown in A of Figure 9.
   - **For 1000 Series Machines**—align the 2 holes of the left light-bar strap and the right light-bar strap as shown in B of Figure 9.
   - **For 1600 Series Machines**—align the 2 holes of the left light-bar strap and the right light-bar strap as shown in C of Figure 9.

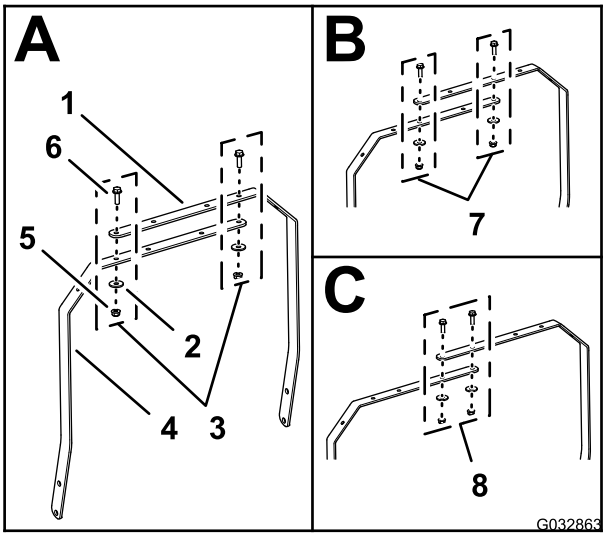

Figure 9

1. Right light-bar strap
2. Washer (5/16 inch)
3. Hole alignment (800 series machines)
4. Left light-bar strap
5. Flange locknut (5/16 inch)
6. Flange-head bolt (5/16 x 1 inch)
7. Hole alignment (1000 series machines)
8. Hole alignment (1600 series machines)

2. Assemble the light-bar straps with the 2 flange-head bolts (5/16 x 1 inch), 2 washers (5/16 inch), and 2 flange locknut (5/16 inch).
3. Torque the nuts and bolts to 1,978 to 2,542 N·cm (175 to 225 in-lb).

3

Assembling the LED Lights to the Light Bar

Parts needed for this procedure:

2	LED light
1	Harness
2	Shield
7	Cable tie

Assembling the Wire Harness to the LED Light Fixtures

1. Connect the 2-pin of the LED light into the 2-socket connector of the LED light harness (Figure 10).

   Note: Ensure that the connectors are fully seated and the latch of the connectors snap together securely.

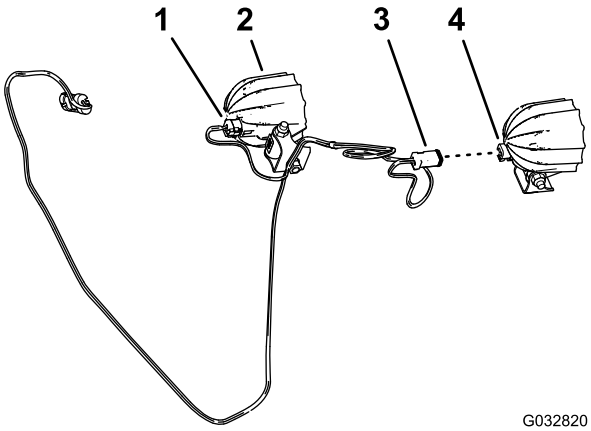

Figure 10

1. 2-socket connector (LED light harness)
2. LED light
3. 2-socket connector
4. 2-pin connector (LED light)

2. Repeat step 1 for the other LED light and the other 2-socket connector of the harness (Figure 10).
3. If assembled, remove the long carriage bolt and nut that secure the mount bracket to the frame of the LED light (Figure 11).

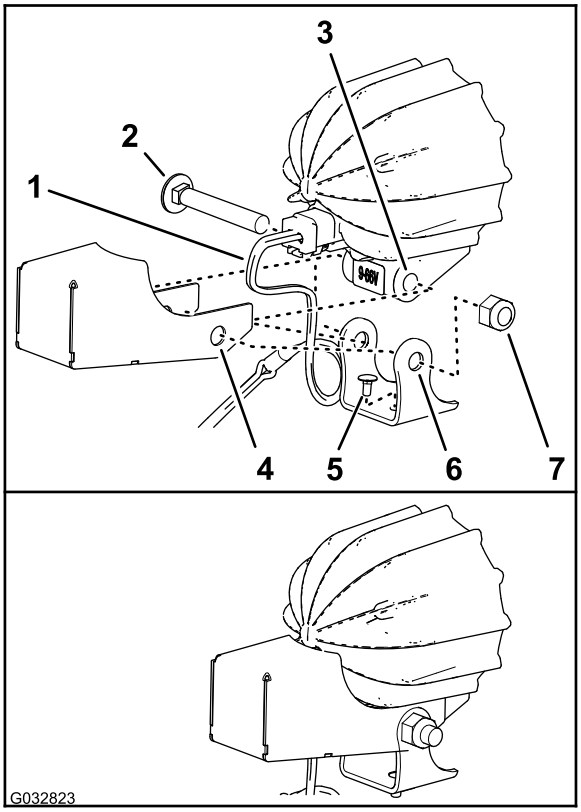

Figure 11

1. Wire harness (LED light kit)
2. Carriage bolt (long)
3. Frame (LED light)
4. Shield
5. Carriage bolt (short)
6. Mount bracket (LED light)
7. Nut

4. Ensure that the short carriage bolt is assembled through the hole in the bottom of the mounting bracket as shown in Figure 11.
5. Align the holes in the shield and mount bracket with the holes in the frame of the LED light as shown in Figure 11.

   Important: Ensure the wire harness has a generous loop of wire inside the shield. When adjusting the alignment of the lights, you must not be able to pull the wire harness tight and strain the 2-socket connector.

6. Assemble the shield and mount bracket to the frame of the LED light with the carriage bolt and nut (Figure 11).
7. Torque the nut to 429 to 519 N·cm (38 to 46 in-lb).
8. Repeat steps 3 through 7 to the other LED light and shield.

Assembling the LED Light Fixtures to the Light-Bar Straps

1. Align the light fixtures with the lenses of the lights toward the front of the machine (Figure 12).

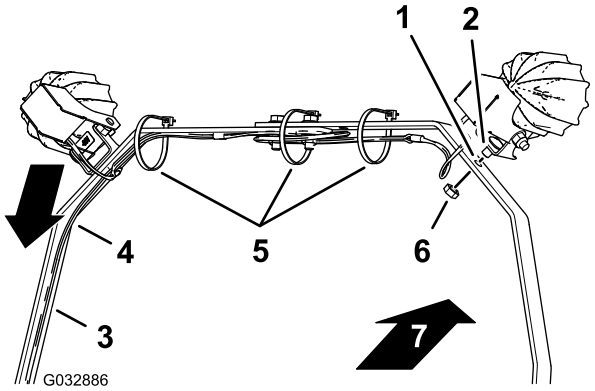

Figure 12

1. Hole (light-bar strap)
2. Carriage bolt (short)
3. Left light-bar strap
4. Harness
5. Cable ties
6. Nut
7. Front of the machine

2. Align the harness along the left light-bar strap as shown in Figure 12.
3. Align the short carriage bolt that you assembled to the mount bracket for the LED light with the hole in the light-bar strap (Figure 12).
4. Assemble the LED light and short carriage bolt to the light-bar strap with a nut (Figure 12).
5. Repeat steps 3 and 4 for the other LED light.
6. Torque the nut to 1,878 to 2,542 N·cm (175 to 225 in-lb)
7. Secure the wire harness to the light-bar straps with cable ties as shown in Figure 12.

   Note: Before tightening the cable ties, make sure that the LED lights are aligned slightly downward from the expected final position. This can prevent damage to the harness connectors if you rotate the lights down.

   Note: If you have excess length of wire harness between the LED lights, bundle the wire harness and secure it at the center cable tie.

4

Installing the Wire Harness to the Machine

No Parts Required

Procedure

1. Route the wire harness for the LED light kit down the left light-bar strap and across to the left handle-bar tube (Figure 13).

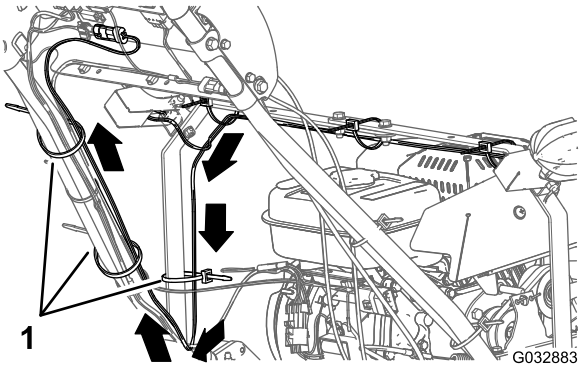

Figure 13

1. Cable ties

2. Route the wire harness up the left handle-bar tube to the control panel (Figure 13).
3. Secure the wire harness to the left light-bar strap and handle-bar tube with 3 cable ties as shown in Figure 13.
4. At the back of the console, connect the 2-pin connector of the wire harness for the LED light kit into the 2-socket connector of the wire harness for the LED light and wireless hour meter harness kit (Figure 14).

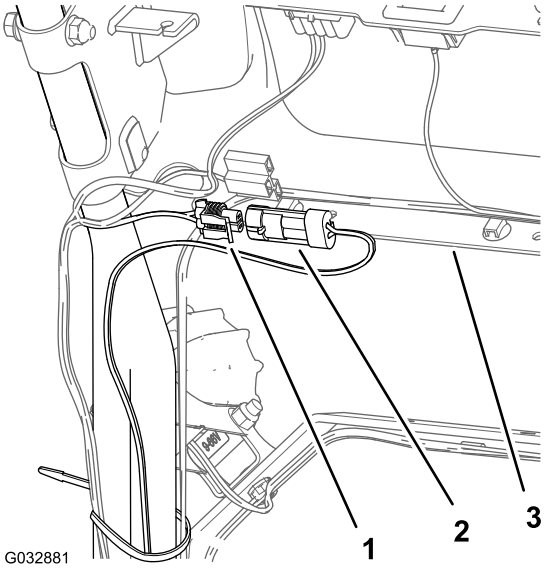

Figure 14

1. 2-socket connector (wire harness—LED light and wireless hour meter harness kit)
2. 2-pin connector (wire harness—LED light kit)
3. Console

5. Secure the wire harness for the LED light kit to the harness of the machine with a cable tie as shown in Figure 15.

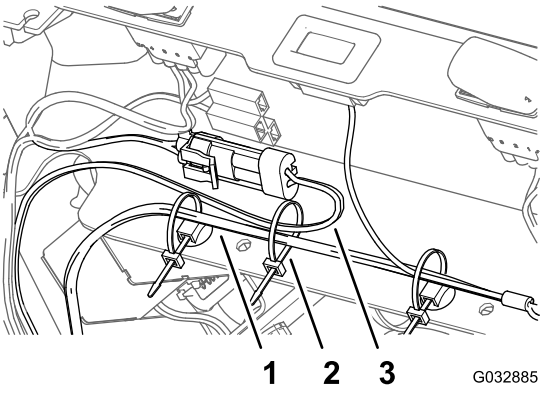

Figure 15

1. Wire harness (machine)
2. Cable tie
3. Wire harness (LED light kit)

5

Connecting the Spark-Plug Wire

No Parts Required

Procedure

Connect the spark-plug wire to the terminal of the spark plug; refer to Figure 1 of 1 Preparing the Machine (page 2).