Form No. 3402-341 Rev A

TORO®

Count on it.

Parts Catalog

Bench Seat Base Kit

Workman® GTX Series Utility Vehicles

Model No. 07135

Register at www.Toro.com.
Original Instructions (EN)

CE

3402-341 A

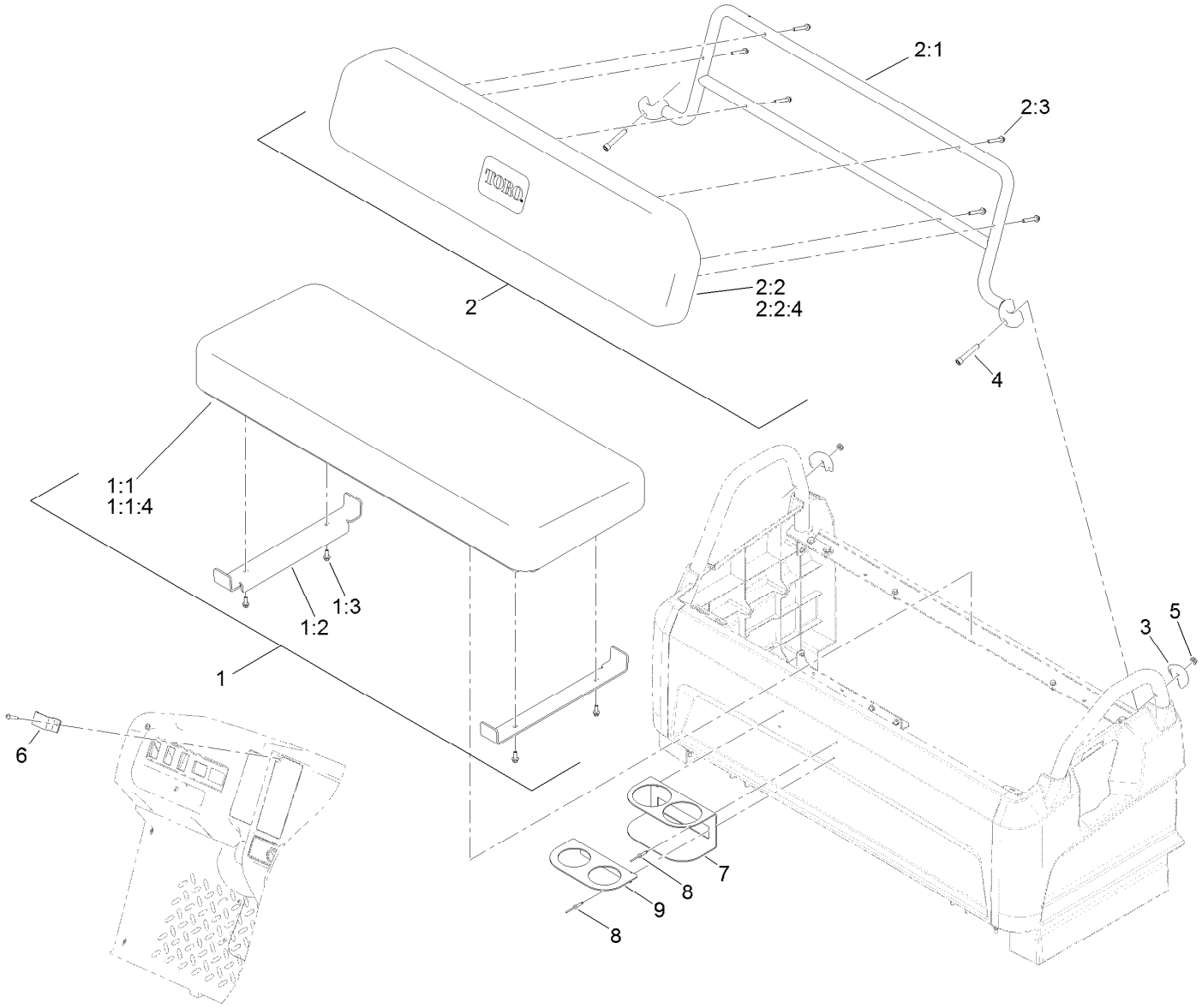

Bench Seat Base Assembly

Ref.	Part Number	Qty.	Description
1	133-3077	1	Bottom Cushion And Bracket ASM
1:1	133-3085	1	Bench Seat Bottom Cushion ASM
1:1:4	133-7121	1	Cover-Cushion, Bottom
1:2	133-7102-03	2	Bracket-Support, Bench Seat Cushion
1:3	3234-4	4	Screw-HHF
2	133-3078	1	Back Rest Frame And Cushion ASM
2:1	133-3079-05	1	Back Rest ASM

Ref.	Part Number	Qty.	Description
2:2	133-3084	1	Bench Seat Back Rest ASM
2:2:4	133-7120	1	Cover-Rest, Back
2:3	32105-18	6	Screw-HHF
3	132-8586-05	2	Casting-Mount, Bench Seat (Back)
4	131-8591	2	Screw-HSH
5	3296-59	2	Nut-Lock, NI
6	133-7111-03	1	Bracket-Mount, Radio
7	133-7122-05	1	Bracket-Holder, Cup
8	133-7130	4	Rivet-Pop
9	133-7133-05	1	Bracket-Divider, Cup Holder