Form No. 3402-457 Rev A

TORO®

Count on it.

Parts Catalog

8-Blade 27-Inch DPA Cutting Unit

Reelmaster® 3100-D Series Traction Unit

Model No. 03181—Serial No. 316000001 and Up

Register at www.Toro.com.
Original Instructions (EN)

CE

3402-457 A

Ordering Replacement Parts

To order replacement parts, please supply the part number, the quantity, and the description of each part desired.

Understanding Reference Numbers

Each identified part in an illustration has a reference number. The reference number for a part also appears in the parts list, along with other information about the part.

This catalog uses two special reference number formats, one to indicate parts in a service assembly and another to indicate the quantity of a given part in an illustration.

Service Assembly Reference Numbers

Parts in service assemblies have reference numbers in the form a:b. The a represents the reference number of the entire service assembly and the b represents a sequential number unique to each part within the service assembly.

For example, a wheel assembly might be identified by reference number 6, the tire by 6:1, the valve by 6:2, and the wheel by 6:3. When you order the assembly identified by reference number 6, you receive all parts identified by reference numbers 6:1,6:2, and 6:3. However, you may also order any part individually. Reference numbers of this type appear in illustration and in parts lists.

Reference Numbers Indicating Quantity

In an illustration, if a reference number indicates more than one part, the reference number has the form nX y. The n represents the quantity of the part, the X is the multiplication symbol, and the y represents the reference number.

For example, in an illustration, the reference number 2X 37 means that two of the parts identified by reference number 37 are indicated.

List of Abbreviations

AR: as required

ASM: assembly

BBC: blade brake control

BHTF: button head thread forming

CARR: carriage

CCW: counter clockwise

CW: clockwise

DEG: degrees

DPA: Dual Point Adjustment

ECM: electronic control module

EXT: external

FH: flat head

GA: gauge

HD: heavy-duty

HF: hex flange

HH: hex head

HHF: hex head flange

HHFTF: hex head flange thread forming

HJ: hex jam

HLH: hex lag head

HOC: height-of-cut

HP: high pressure

HSBH: hex socket button head

HSFH: hex socket flat head

HSH: hex socket head

HWH: hex washer head

HWHTF: hex washer head thread forming

HYD: hydraulic

LH: left hand

LP: low pressure

LPG: Liquefied Petroleum Gas

NI: nylon insert

NPTF: national pipe thread fine

PFH: phillips flat head

PPH: phillips pan head

PPHTF: phillips pan head thread forming

PRH: phillips round head

PTH: phillips truss head

PTO: power-take-off

RH: right hand

ROPS: roll-over protection system

RRB: rear roller brush

SFH: slotted fillister head

SHH: slotted hex head

SHWH: slotted hex washer head

SPH: slotted pan head

SQH: square head

SRH: slotted round head

STD: standard

TAP: self tapping

TTH: torx truss head

Contents

Frame Assembly 4
Reel and Bedbar Assembly 5
Optional Heavy-Duty MVP Kit No. 120-7230 6
Front and Rear Roller Assembly 7
Long Roller Assembly No. 112-8915 8
Optional Full Front Roller Assembly No. 114-9383 9
Wiehle Roller Assembly No. 117-0960 10
Optional Shoulder Roller Assembly No. 119-0630 11
Shield Assembly 12
Optional Tool Assembly 13
Attachments and Accessories 14

© 2016—The Toro® Company
8111 Lyndale Avenue South
Bloomington, MN 55420

Contact us at www.Toro.com.
Printed in the USA.
All Rights Reserved

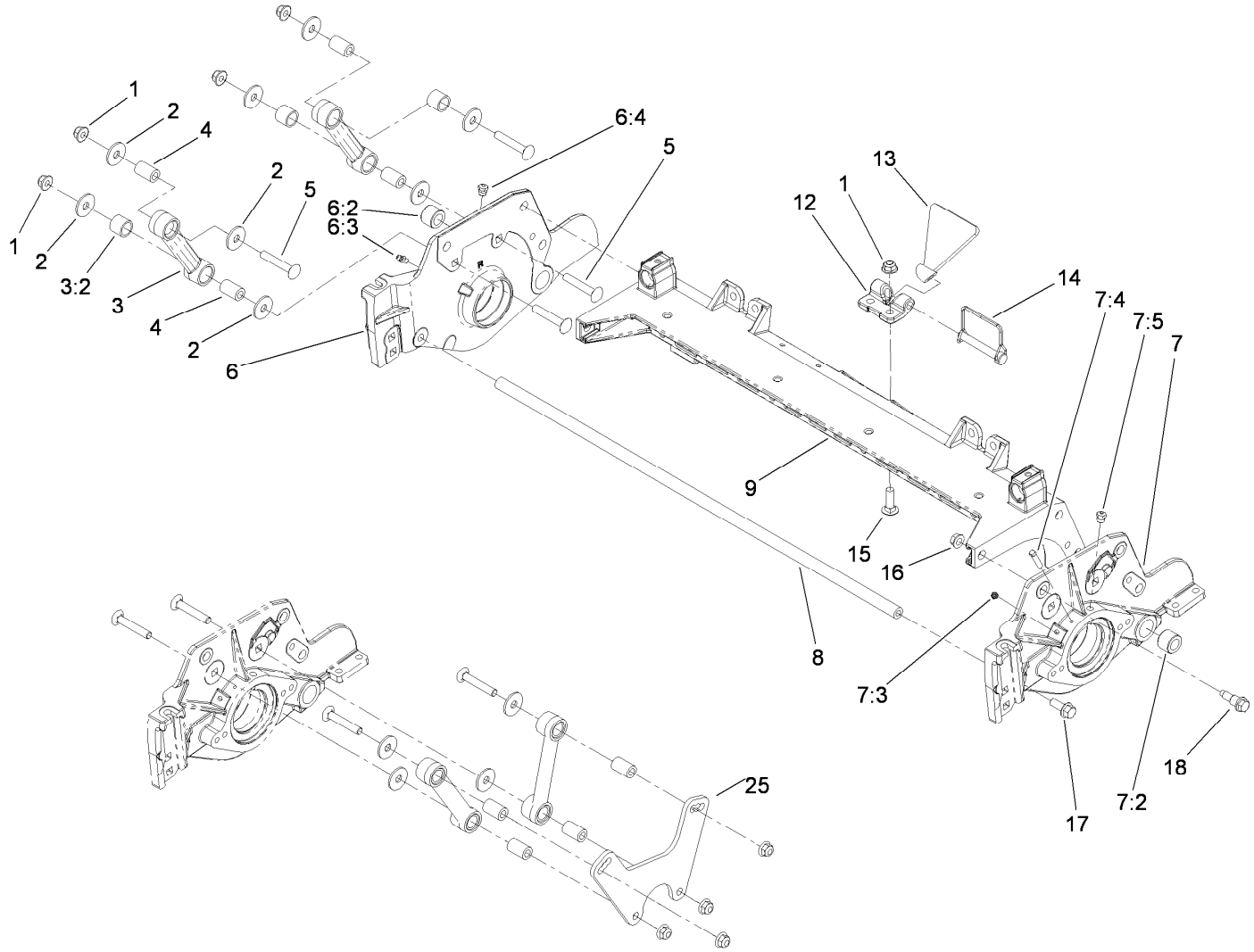

Frame Assembly

Ref.	Part Number	Qty.	Description
1	104-8301	10	Nut-Flange, NI
2	93-8806	16	Washer-Hardened
3	16-9759	4	Link ASM
3:2	94-8945	2	Bushing
4	93-6981	8	Spacer
5	3231-40	8	Bolt-CARR, Short Neck
6	115-4263	1	Plate-Side, RH
6:2	106-9618	1	Bushing-Rubber
6:3	302-5	1	Fitting-Grease
6:4	302-39	1	Fitting-Plug
7	115-4260	1	Plate-Side, LH
7:2	106-9618	1	Bushing-Rubber
7:3	302-5	1	Fitting-Grease
7:4	107-7447	1	Screw-Set, SQH
7:5	302-39	1	Fitting-Plug
8	112-8936	1	Tube-Support
9	112-8935	1	Frame-Center
12	110-4058	1	Bracket-Chain
13	119-8010-03	1	Kickstand ●
14	107-7400	1	Pin-Snapper ●
15	3231-25	2	Bolt-CARR
16	3290-357	6	Nut-HHF, Whiz
17	3234-11	2	Screw-HHF
18	107-2979	6	Bolt-Shoulder
25	119-0646-03	2	Plate-Fixed (High HOC) ●

● Optional Equipment

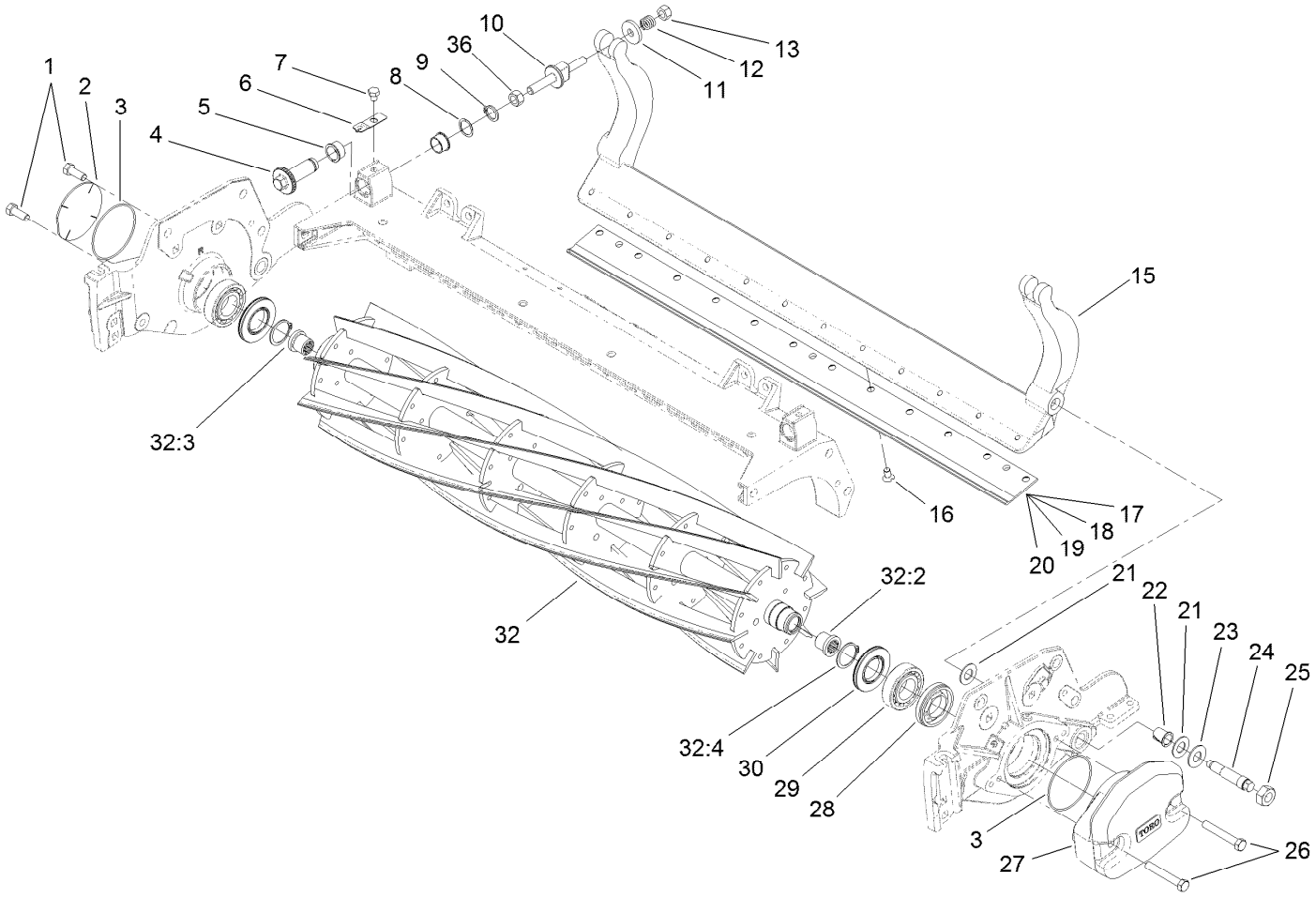

Reel and Bedbar Assembly

Ref.	Part Number	Qty.	Description
1	323-6	2	Screw-HH
2	94-2703	1	Plug
3	112-6967	2	O-Ring
4	120-5118	2	Shaft-Adjuster
5	106-5344	4	Bushing-Flange, Keyed
6	99-2097	2	Detent
7	119-4067	2	Screw-HH
8	120-5116	2	Washer-Wave
9	108-0015	2	Washer-Flat
10	115-7039	2	Screw-Adjuster, Bedbar
11	119-4155	2	Washer-Hardened
12	120-5120	2	Spring-Compression
13	119-4039	2	Nut-Hex, NI
15	112-8908-01	1	Bedbar
16	119-4151	10	Screw-Bedknife
17	114-9388	1	Bedknife-STD (Fairway)
18	112-8910	1	Bedknife-Edgemax ■
19	114-9390	1	Bedknife-HD (Fairway) ■
20	120-1641	1	Bedknife-Low HOC EXT ■
21	61-1950	4	Washer-Plastic
22	56-9520	2	Bushing-Flanged
23	69-8980	2	Washer
24	106-9623	2	Bolt-Bedbar
25	3296-33	2	Nut-Lock, NI
26	323-12	2	Screw-HH
27	119-0614-01	1	Weight-End
28	107-2954	1	Nut-Adjuster, Bearing
29	93-2489	2	Bearing
30	107-4028	2	Seal-Grease
32	127-2094	1	Reel-Fairway, 8 Blade (27In)
32:2	107-3276	1	Insert-Threaded, LH
32:3	107-3275	1	Insert-Threaded, RH
32:4	92-2601	2	Ring-Retaining
36	3296-33	2	Nut-Lock, NI
40	120-7230	1	HD DPA Mvp Kit ●

● Not illustrated

■ Optional Equipment

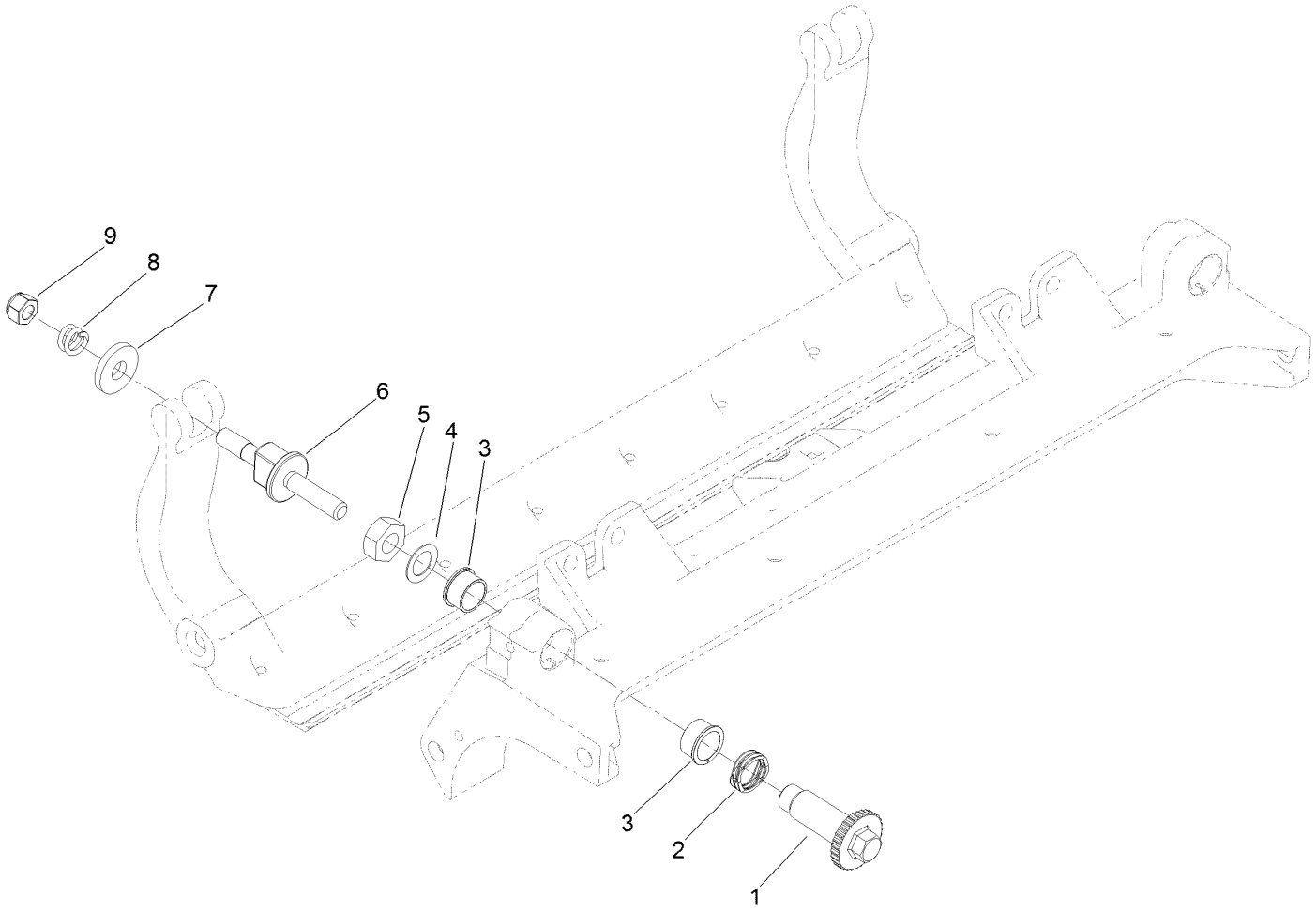

Optional Heavy-Duty MVP Kit No. 120-7230

Ref.	*Part Number*	*Qty.*	*Description*
1	120-5118	2	Shaft-Adjuster
2	120-5116	2	Washer-Wave
3	106-5344	4	Bushing-Flange, Keyed
4	108-0015	2	Washer-Flat
5	3296-33	2	Nut-Lock, NI
6	115-7039	2	Screw-Adjuster, Bedbar
7	119-4155	2	Washer-Hardened
8	120-5120	2	Spring-Compression
9	119-4039	2	Nut-Hex, NI

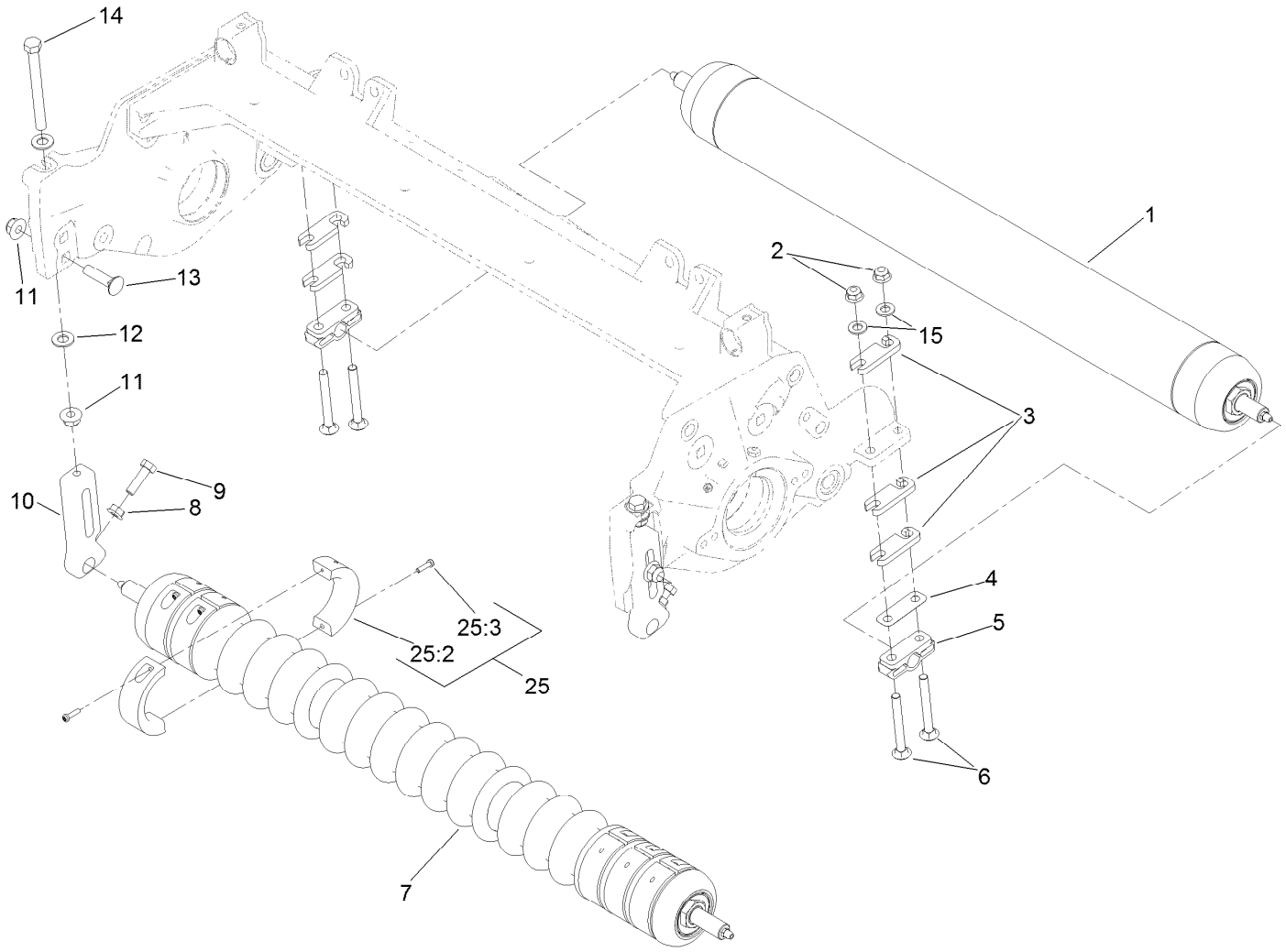

Front and Rear Roller Assembly

Ref.	Part Number	Qty.	Description
1	112-8915	1	Rear Roller ASM (3-Inch Dia)
2	104-8300	4	Nut-Flange, NI
3	119-0626	12	Shim-Roller
4	107-4001	2	Shim-Roller (0.01 Inch) ■
5	106-3924	2	Bracket-Roller, Rear
6	3230-26	4	Screw-CARR
7	114-9383	1	Full Front Roller ASM (3-Inch Dia) ●■
7	117-0960	1	Plastic Wiehle Roller ASM
7	119-0630	1	Plastic Shoulder Roller ASM ●■
8	32128-20	2	Nut-HF
9	322-16	2	Screw-HH
10	120-0404	1	Bracket-High HOC, LH
10	120-0405	1	Bracket-High HOC, RH
11	104-8301	4	Nut-Flange, NI
12	48-9220	4	Washer
13	3231-4	2	Screw-CARR
14	107-4026	2	Screw-HH
15	94-6936	4	Washer-Hardened
25	119-0649	6	Trim/HD Collar Kit
25:2	119-1604	2	Collar-Trim/HD
25:3	104-1835	2	Screw

● Not illustrated

■ Optional Equipment

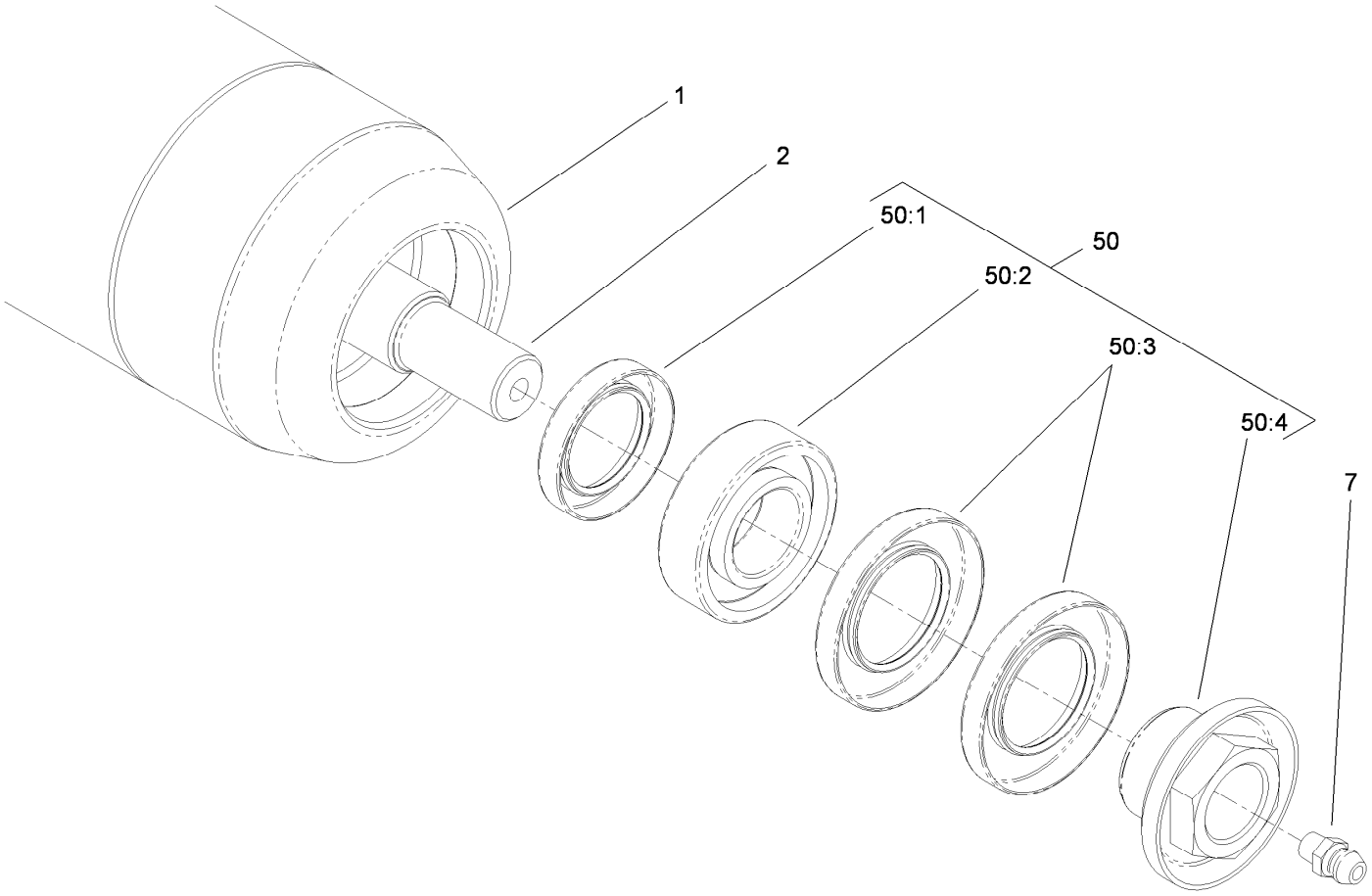

Long Roller Assembly No. 112-8915

Ref.	*Part Number*	*Qty.*	*Description*
1	112-8916-03	1	Tube-Roller, Long
2	112-8918	1	Shaft-Long, Rear Roller
7	302-5	2	Fitting-Grease
50	114-5430	1	Roller Rebuild Kit
50:1	114-3717	2	Seal-Oil
50:2	112-5290	2	Bearing-Steel, Stainless
50:3	112-7494	4	Seal
50:4	114-5411	2	Nut-Lock, Bearing

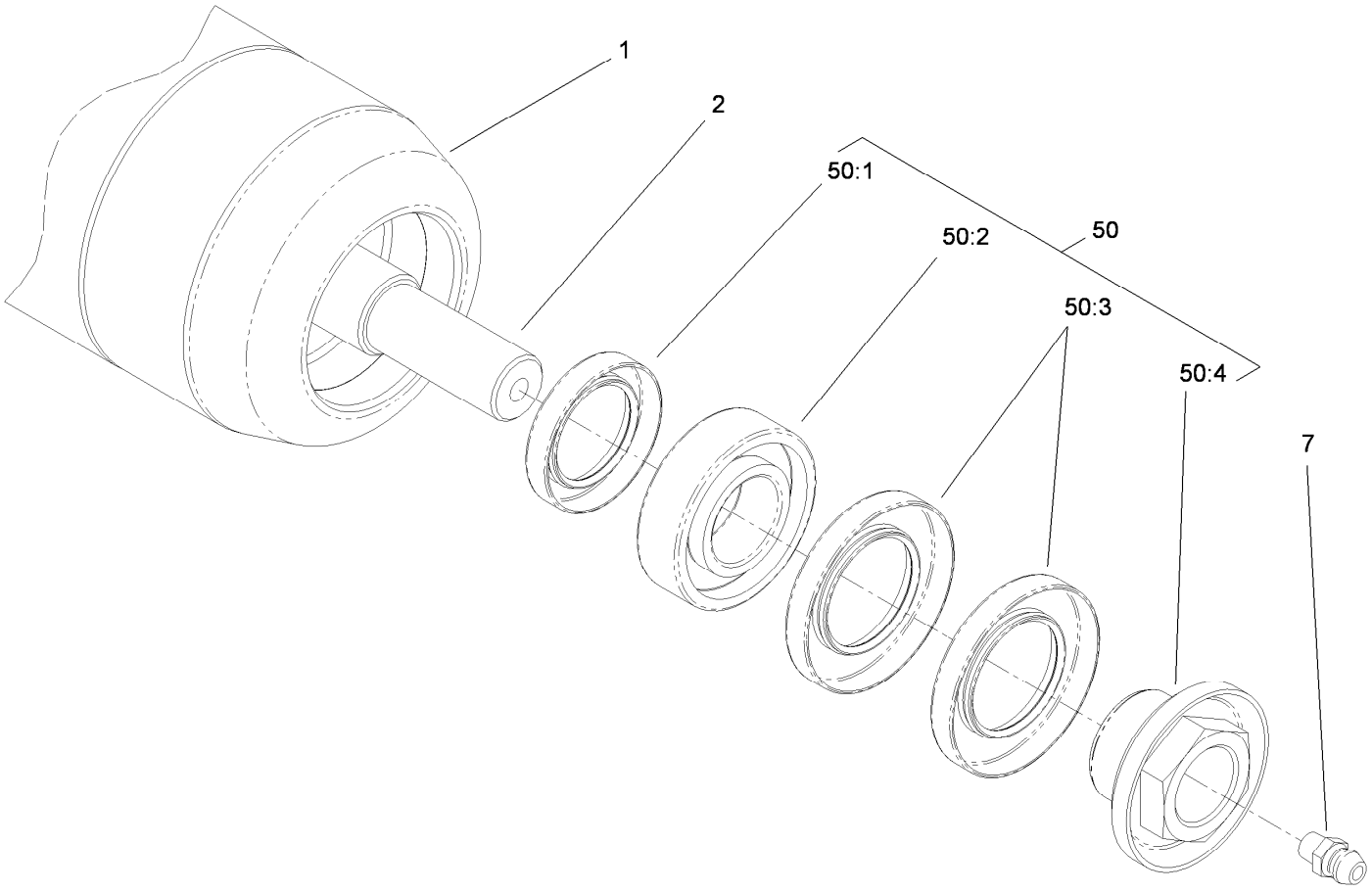

Optional Full Front Roller Assembly No. 114-9383

Ref.	*Part Number*	*Qty.*	*Description*
1	112-8916-03	1	Tube-Roller, Long
2	117-0957	1	Shaft-Roller, Wiehle
7	302-5	2	Fitting-Grease
50	114-5430	1	Roller Rebuild Kit
50:1	114-3717	2	Seal-Oil
50:2	112-5290	2	Bearing-Steel, Stainless
50:3	112-7494	4	Seal
50:4	114-5411	2	Nut-Lock, Bearing

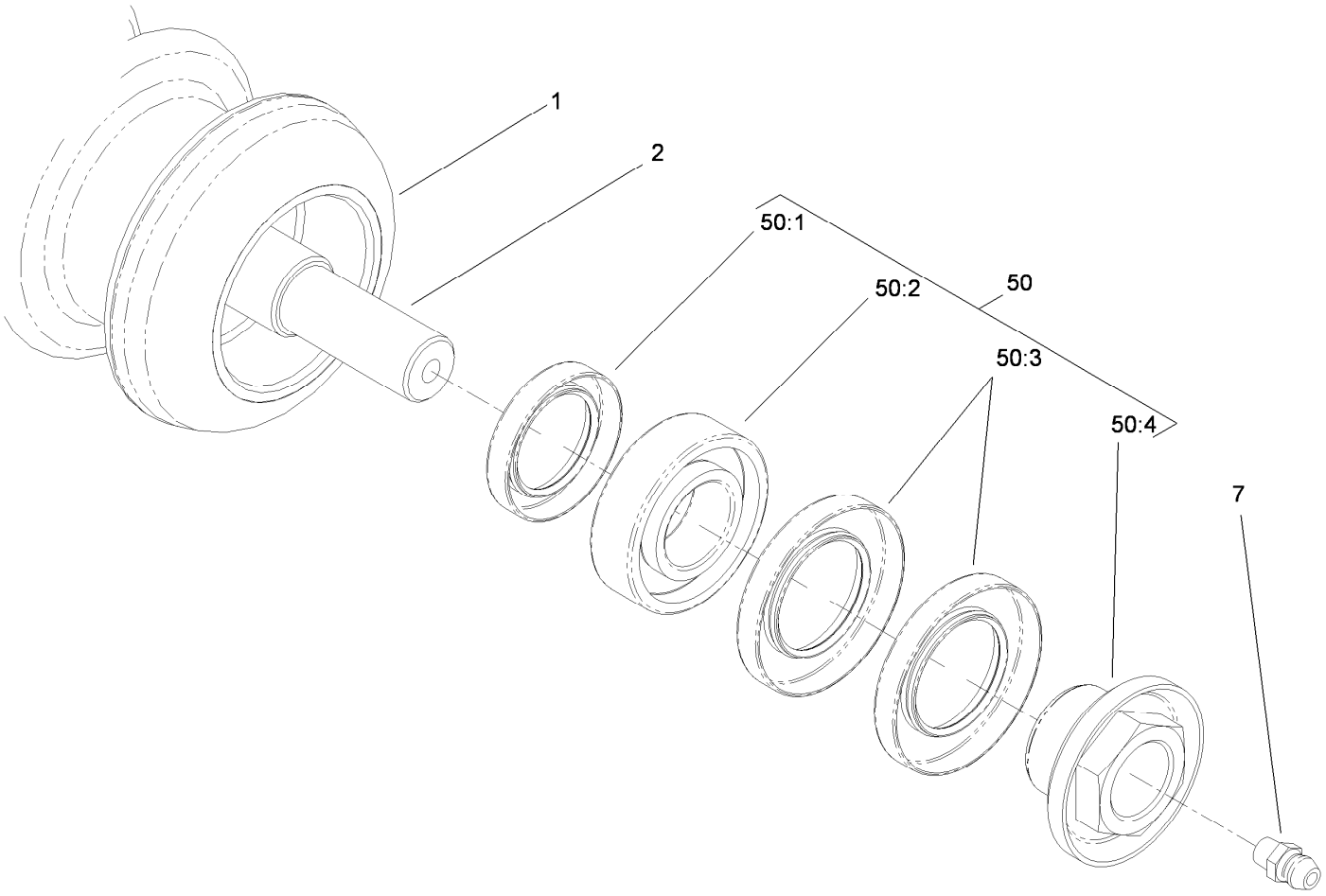

Wiehle Roller Assembly No. 117-0960

Ref.	*Part Number*	*Qty.*	*Description*
1	117-0959	1	Roller-Wiehle, Plastic
2	117-0957	1	Shaft-Roller, Wiehle
7	302-5	2	Fitting-Grease
50	114-5430	1	Roller Rebuild Kit
50:1	114-3717	2	Seal-Oil
50:2	112-5290	2	Bearing-Steel, Stainless
50:3	112-7494	4	Seal
50:4	114-5411	2	Nut-Lock, Bearing

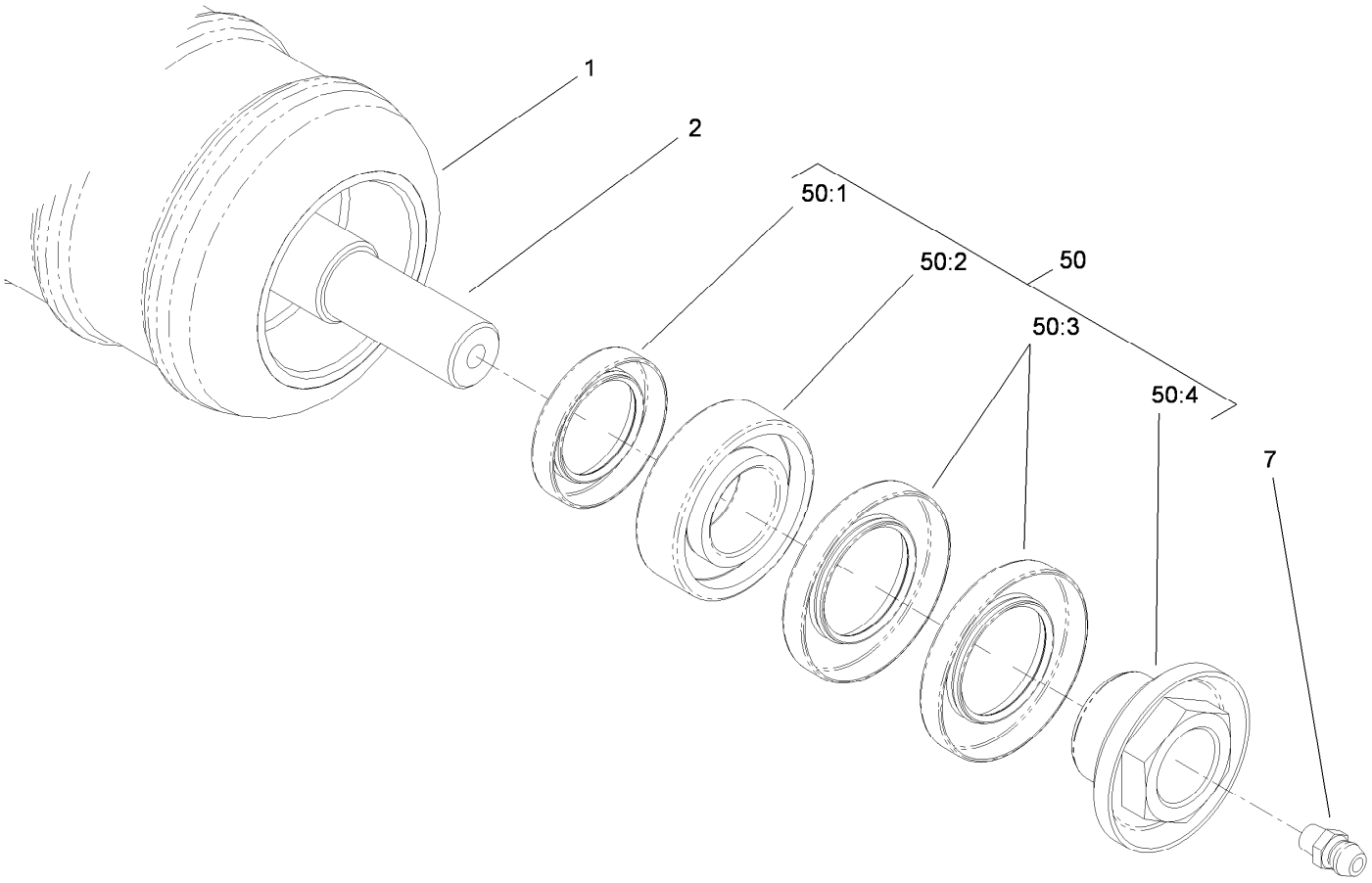

Optional Shoulder Roller Assembly No. 119-0630

Ref.	*Part Number*	*Qty.*	*Description*
1	119-0631	1	Roller-Shoulder, Plastic
2	117-0957	1	Shaft-Roller, Wiehle
7	302-5	2	Fitting-Grease
50	114-5430	1	Roller Rebuild Kit
50:1	114-3717	2	Seal-Oil
50:2	112-5290	2	Bearing-Steel, Stainless
50:3	112-7494	4	Seal
50:4	114-5411	2	Nut-Lock, Bearing

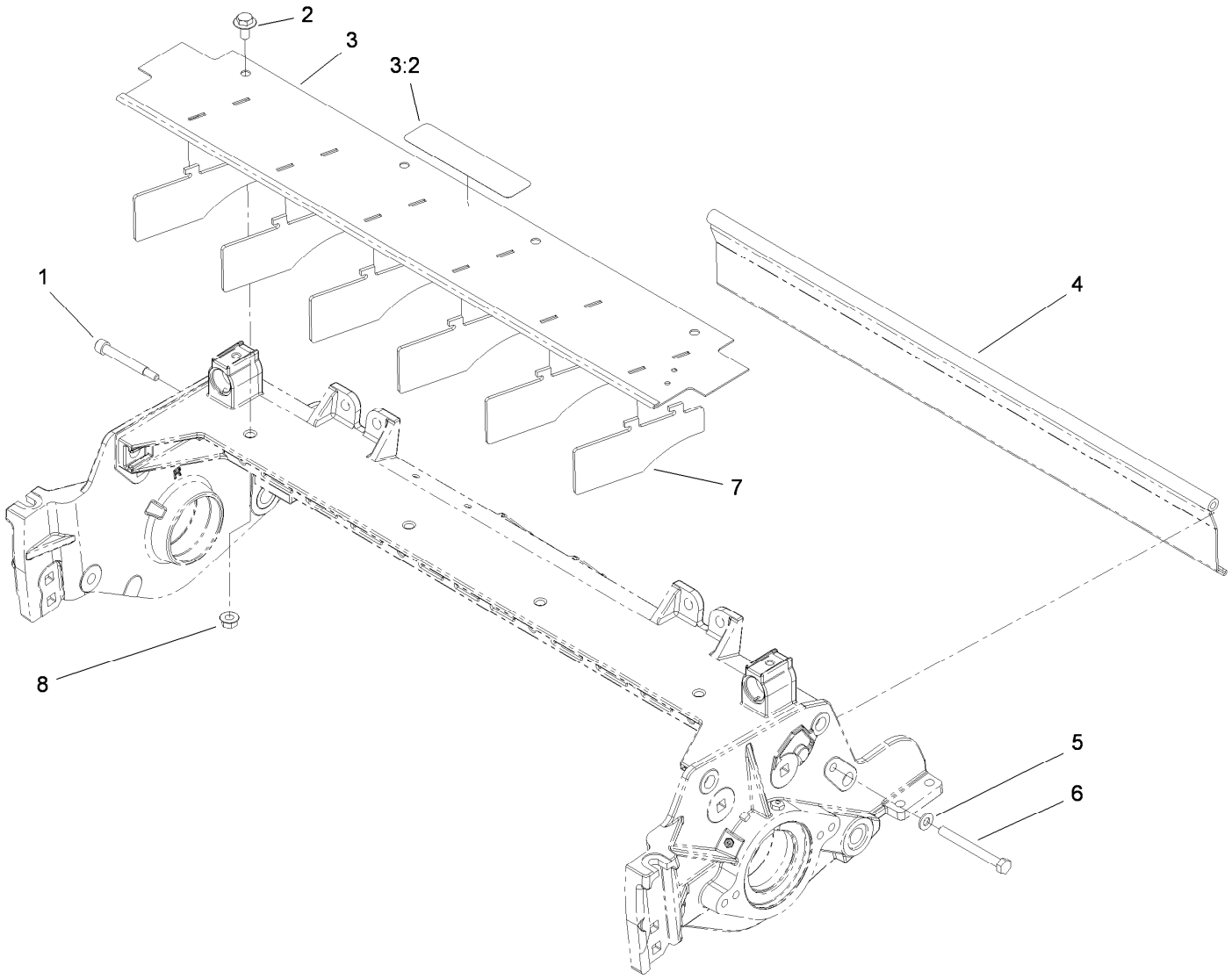

Shield Assembly

Ref.	*Part Number*	*Qty.*	*Description*
1	107-7773	1	Screw-HSH
2	3234-7	4	Screw-HHF
3	112-8942	1	Front Grass Shield ASM
3:2	93-6688	1	Decal-Danger
4	112-8944-01	1	Shield-Grass, Rear
5	3256-74	1	Washer-Flat
6	322-14	1	Screw-HH
7	110-1706	6	Deflector
8	32128-20	4	Nut-HF

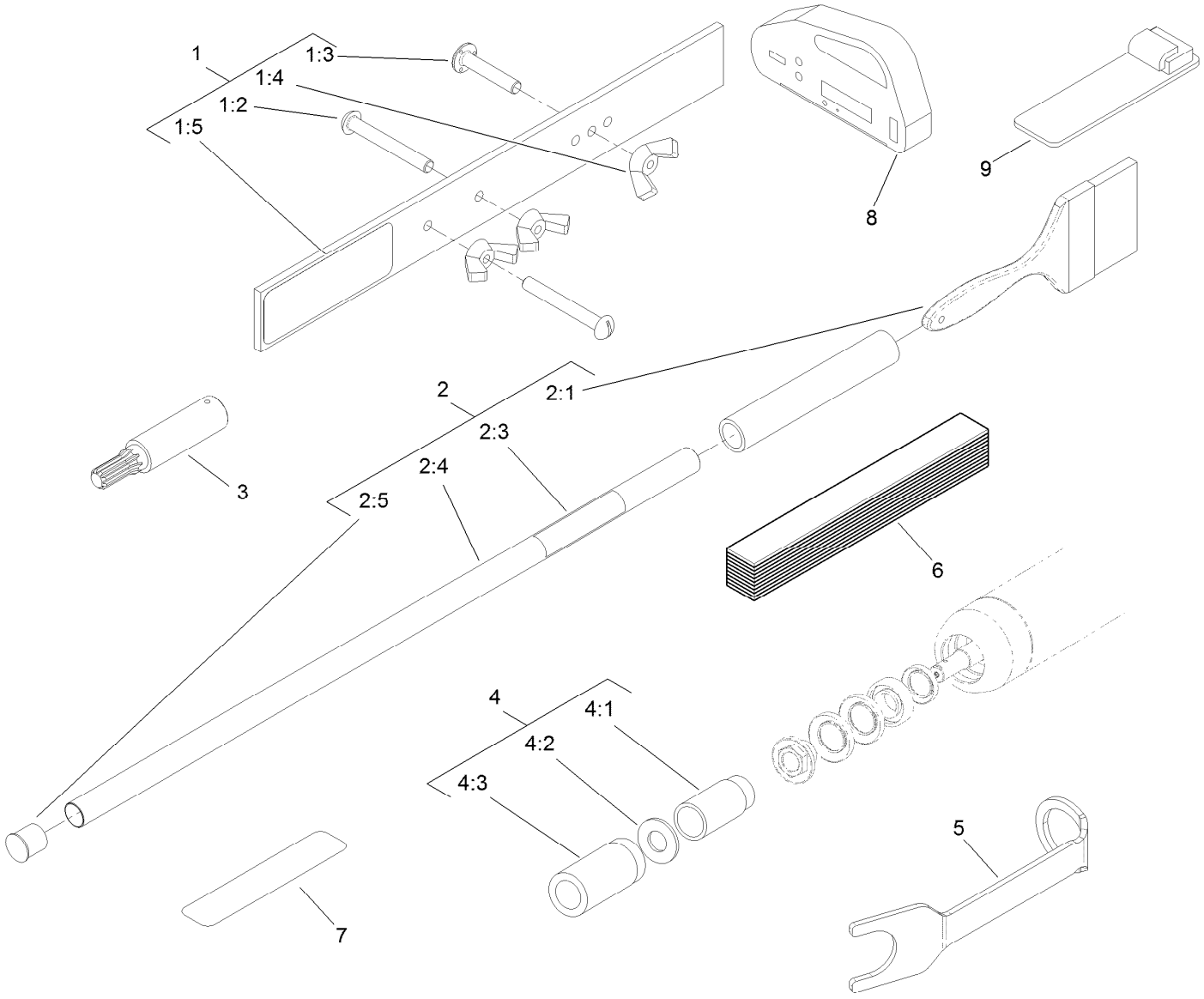

Optional Tool Assembly

Ref.	Part Number	Qty.	Description
1	108-6715	1	Gauge Bar ASM
1:2	32122-54	2	Screw-Head, Truss
1:3	108-6714	1	Stud-Weld
1:4	32103-3	3	Nut-Wing
1:5	108-6712	1	Decal-Gauge, Bar
2	29-9100	1	Brush And Handle ASM
2:1	36-4310	1	Brush
2:3	98-3206	1	Decal
2:4	29-9080	1	Handle
2:5	2410-18	1	Cap-Plastic
3	TOR4074	1	Adapter-Drive, Reel ●

Ref.	Part Number	Qty.	Description
4	115-0803	1	Roller Rebuild Tool Kit
4:1	115-0852	1	Tool-Inner Seal
4:2	107-8133	1	Washer-Flat
4:3	115-0853	1	Tool-Bearing/Outer Seals
5	117-0975	1	Tool-Installation, Reel Bearing
6	125-5610	1	Paper-Reel, Toro (10 Pack)
7	125-5611	1	Shim-Toro Reel (0.002 Inch)
8	131-6828	1	Indicator-Angle
9	131-6829	1	Mount-Indicator, Angle

● Obtain directly from K-Line Industries, Inc. (800) 241-0936

Attachments and Accessories

For 03181 8-Blade 27-Inch DPA Cutting Unit Reelmaster 3100-D Series Traction Unit

Product Name	Model/Part
27in Verticutter	03184
Gauge Bar Assembly	108-6715
Basket Kit	03185
Brush and Handle Kit	29-9100
27in Rear Roller Brush Kit	03186
Roller Tipper Kit	119-0635
Rear Roller Scraper Kit	114-9368
Wiehle Scraper ASM	114-9372-03
Comb/Scraper Kit	114-9376
Full Front Roller ASM (3in dia)	114-9383
Full Front Roller Scraper ASM (3in dia)	114-9386-03
High Height-of-Cut Kit	110-9600
Plastic Shoulder Roller ASM	119-0630
Shoulder Scraper ASM	114-9381-03
Trim/Heavy-Duty Collar Kit	119-0649
Fixed Plate (High HOC)	119-0646-03
Cutting Unit Kickstand	119-8010-03
Reel Drive Adapter	TOR4074
Roller Rebuild Tool Kit	115-0803
Roller Rebuild Kit	114-5430
Turf Evaluator	04399
Groomer/RRB Bearing and Seal Kit	110-4086
Reel Bearing Installation Tool	117-0975
Heavy-Duty DPA MVP Kit	120-7230
Brush-Roller (High HOC)	115-0838
27in Bedknife-Edgemax	112-8910
Toro Reel Paper (10 Pack)	125-5610
Low HOC Extended Bedknife	120-1641
Toro Reel Shim (0.002in)	125-5611
Bedknife-HD	114-9390
Angle Indicator	131-6828
Angle Indicator Mount	131-6829

Notes:



Count on it.