Form No. 3402-586 Rev A

TORO®

Count on it.

Parts Catalog

# MH-400EH2

## Material Handler

**Model No. 44954—Serial No. 316000001 and Up**

Register at www.Toro.com.
Original Instructions (EN)

CE

*3402-586* A

# Ordering Replacement Parts

To order replacement parts, please supply the part number, the quantity, and the description of each part desired.

**Understanding Reference Numbers**

Each identified part in an illustration has a reference number. The reference number for a part also appears in the parts list, along with other information about the part.

This catalog uses two special reference number formats, one to indicate parts in a service assembly and another to indicate the quantity of a given part in an illustration.

**Service Assembly Reference Numbers**

Parts in service assemblies have reference numbers in the form a:b. The a represents the reference number of the entire service assembly and the b represents a sequential number unique to each part within the service assembly.

For example, a wheel assembly might be identified by reference number 6, the tire by 6:1, the valve by 6:2, and the wheel by 6:3. When you order the assembly identified by reference number 6, you receive all parts identified by reference numbers 6:1,6:2, and 6:3. However, you may also order any part individually. Reference numbers of this type appear in illustration and in parts lists.

**Reference Numbers Indicating Quantity**

In an illustration, if a reference number indicates more than one part, the reference number has the form nX y. The n represents the quantity of the part, the X is the multiplication symbol, and the y represents the reference number.

For example, in an illustration, the reference number 2X 37 means that two of the parts identified by reference number 37 are indicated.

# List of Abbreviations

**AR:** as required

**ASM:** assembly

**BBC:** blade brake control

**BHTF:** button head thread forming

**CARR:** carriage

**CCW:** counter clockwise

**CW:** clockwise

**DEG:** degrees

**DPA:** Dual Point Adjustment

**ECM:** electronic control module

**EXT:** external

**FH:** flat head

**GA:** gauge

**HD:** heavy-duty

**HF:** hex flange

**HH:** hex head

**HHF:** hex head flange

**HHFTF:** hex head flange thread forming

**HJ:** hex jam

**HLH:** hex lag head

**HOC:** height-of-cut

**HP:** high pressure

**HSBH:** hex socket button head

**HSFH:** hex socket flat head

**HSH:** hex socket head

**HWH:** hex washer head

**HWHTF:** hex washer head thread forming

**HYD:** hydraulic

**LH:** left hand

**LP:** low pressure

**LPG:** Liquefied Petroleum Gas

**NI:** nylon insert

**NPTF:** national pipe thread fine

**PFH:** phillips flat head

**PPH:** phillips pan head

**PPHTF:** phillips pan head thread forming

**PRH:** phillips round head

**PTH:** phillips truss head

**PTO:** power-take-off

**RH:** right hand

**ROPS:** roll-over protection system

**RRB:** rear roller brush

**SFH:** slotted fillister head

**SHH:** slotted hex head

**SHWH:** slotted hex washer head

**SPH:** slotted pan head

**SQH:** square head

**SRH:** slotted round head

**STD:** standard

**TAP:** self tapping

**TTH:** torx truss head

# Contents

Box Frame Assembly . . . . . 4
Box Frame Decal Assembly No. 120-0890 . . . . . 5
Attachment Clamp Assembly No. T36015800 . . . . . 6
Guard Assembly . . . . . 7
Hitch Assembly . . . . . 8
Belt and Skirting Assembly . . . . . 9
Skirting Assembly . . . . . 10
Conveyor Assembly . . . . . 11
Chain Drive Assembly . . . . . 12
Chain and Sprocket Assembly . . . . . 13
Wheel and Frame Assembly . . . . . 14
RH Shaft Assembly No. 120-9401 . . . . . 15
LH Brake Assembly No. 120-9437 . . . . . 16
Hub Assembly No. 120-9404 . . . . . 17
LH Shaft Assembly No. 120-9402 . . . . . 18
RH Brake Assembly No. 120-9436 . . . . . 19
Hydraulic Manifold Block and Fitting Assembly . . . . . 20
Hydraulic Block Assembly No. T0000-7792 . . . . . 21
Hydraulic Motor and Hose Assembly . . . . . 22
Hydraulic Motor Assembly No. T0000-5303 . . . . . 23
Hydraulic Cylinder and Manifold Block Assembly . . . . . 24
Block Guard and Hose Assembly . . . . . 25
Brake Assembly . . . . . 26
Wire Harness and Pocket Control Assembly . . . . . 27
Wireless Remote Assembly . . . . . 28
Attachments and Accessories . . . . . 29

**© 2016—The Toro® Company**
**8111 Lyndale Avenue South**
**Bloomington, MN 55420**



**Contact us at www.Toro.com.**
**Printed in the USA.**
**All Rights Reserved**

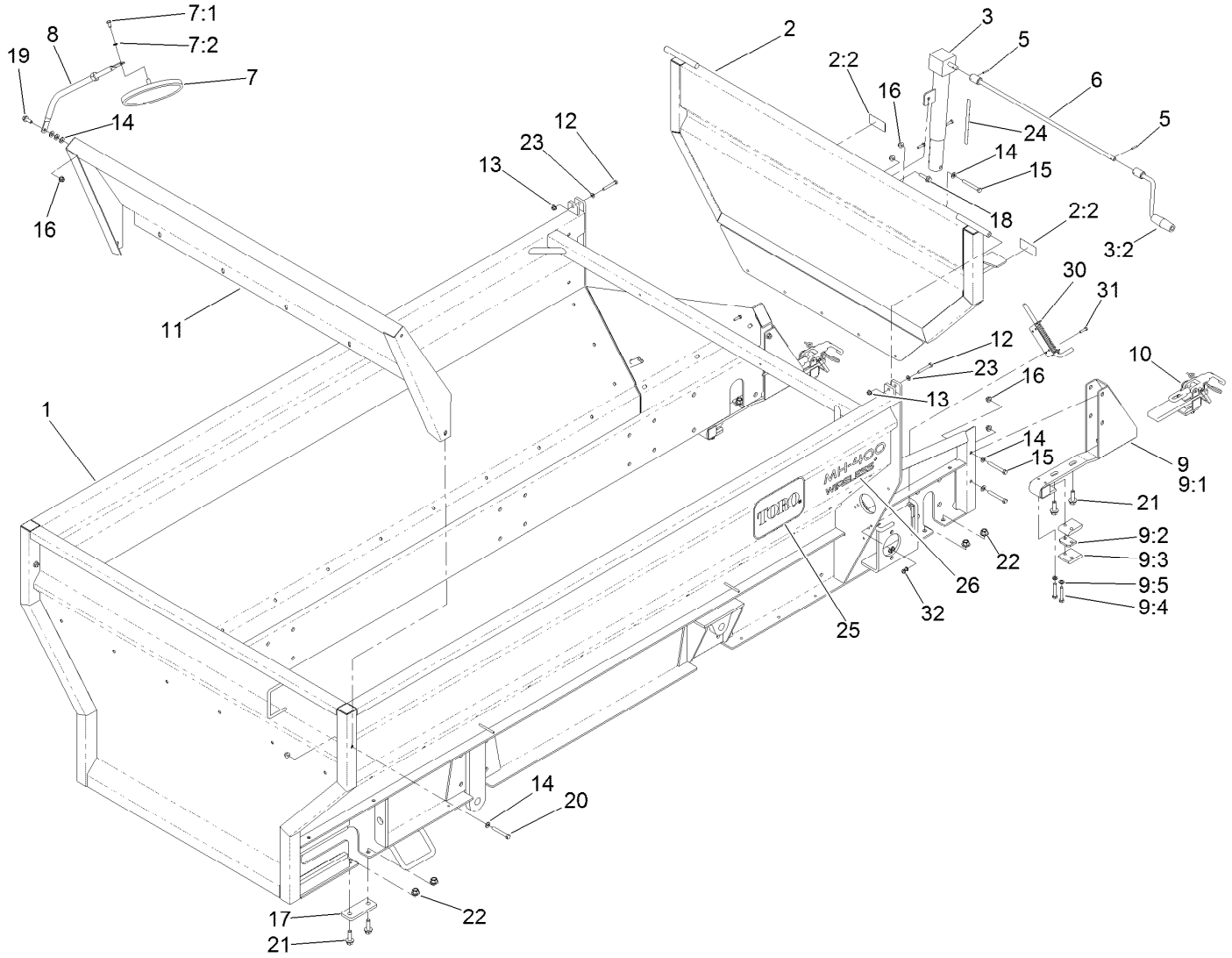


# Box Frame Assembly

| Ref. | Part Number | Qty. | Description |
|---|---|---|---|
| 1 | 120-0890 | 1 | Box Frame ASM |
| 2 | 120-0891 | 1 | Tailgate ASM |
| 2:2 | 119-6838 | 2 | Decal-Warning, Conveyor |
| 3 | T36031200 | 1 | Jack-Tailgate |
| 3:2 | T36031210 | 1 | Handle-Crank |
| 5 | 32121-45 | 2 | Pin-Spring |
| 6 | T36011220-01 | 1 | Crank-Jack |
| 7 | 92-2678 | 1 | Mirror-Convex |
| 7:1 | 322-2 | 1 | Screw-HH |
| 7:2 | 3253-4 | 1 | Washer-Lock |
| 8 | 125-0150 | 1 | Mirror-Arm, Adjustable |
| 9 | T36015790 | 2 | Attachment Bracket ASM |
| 9:1 | 119-6872-01 | 1 | Bracket-Attachment |
| 9:2 | T01-13489B | 1 | Tab-Spacer |
| 9:3 | T36015200 | 2 | Bar-Bearing |
| 9:4 | 323-10 | 2 | Screw-HH |
| 9:5 | 3253-21 | 2 | Washer-Lock |
| 10 | T36015800 | 2 | Attachment Clamp ASM |
| 11 | T36011550-01 | 1 | Panel-Sloped |

| Ref. | Part Number | Qty. | Description |
|---|---|---|---|
| 12 | 322-11 | 2 | Screw-HH |
| 13 | 104-8300 | 2 | Nut-Flange, NI |
| 14 | 3256-24 | 10 | Washer-Flat |
| 15 | 323-14 | 5 | Screw-HH |
| 16 | 104-8301 | 14 | Nut-Flange, NI |
| 17 | T36011650 | 2 | Bar-Bridge |
| 18 | 114-4681 | 1 | Screw-HHF |
| 19 | 3234-42 | 6 | Screw-HHF |
| 20 | 323-13 | 2 | Screw-HH |
| 21 | 100-6116 | 8 | Screw-HHF |
| 22 | 99-5107 | 8 | Nut-Lock |
| 23 | 3256-23 | 2 | Washer-Flat |
| 24 | 119-6869 | 1 | Decal-Tailgate Adjustment |
| 25 | 66-6140 | 3 | Decal |
| 26 | 119-6803 | 3 | Decal-Wireless |
| 30 | T62021030 | 2 | Latch-Spring |
| 31 | 321-6 | 8 | Screw-HH |
| 32 | 104-7201 | 8 | Nut-Flange, NI |

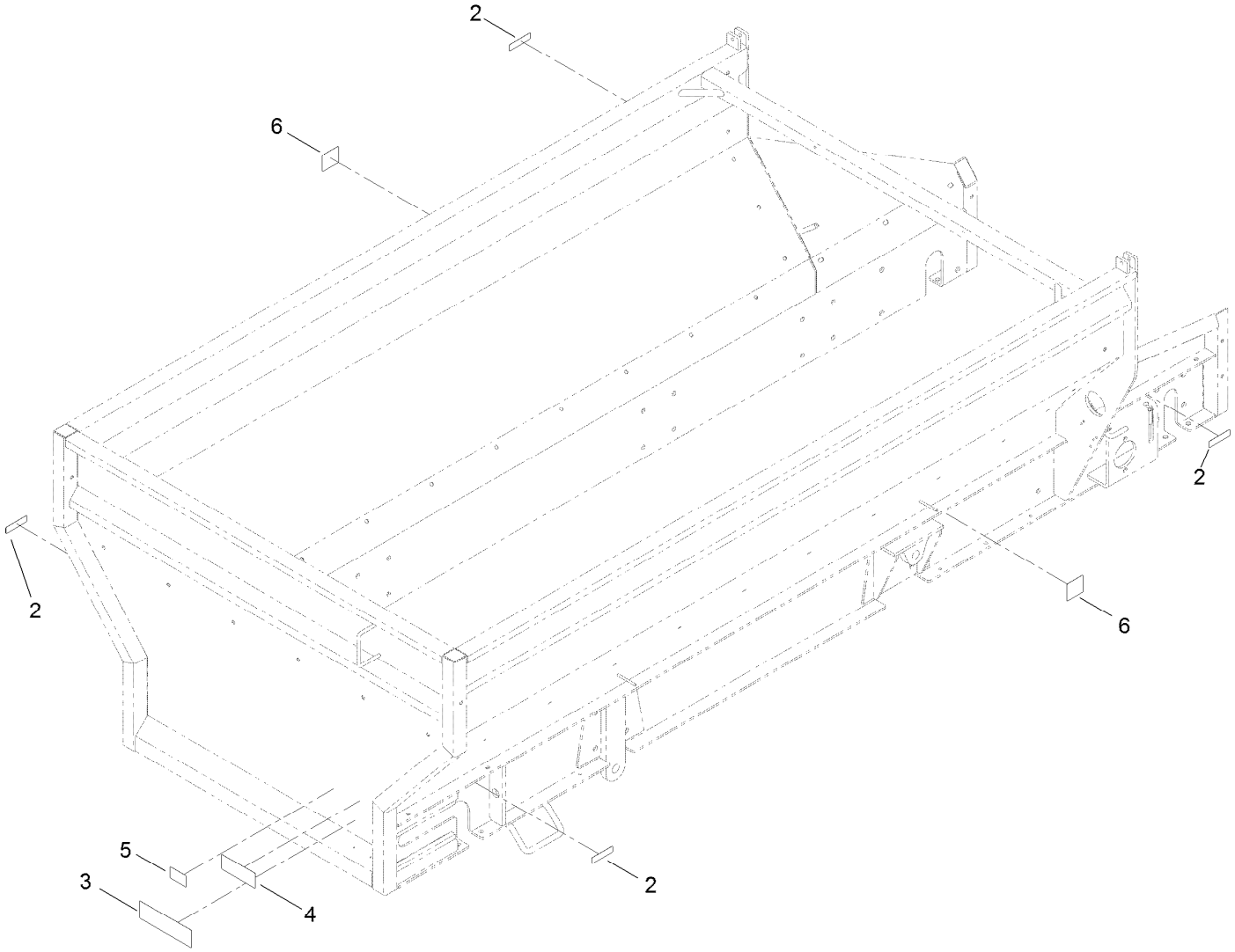


# Box Frame Decal Assembly No. 120-0890

| *Ref.* | *Part Number* | *Qty.* | *Description* |
|---|---|---|---|
| 2 | 119-0217 | 4 | Decal-Danger |
| 3 | 119-6806 | 1 | Decal-Danger |
| 4 | 119-6812 | 1 | Decal-Warning, Tipping Hazard |
| 5 | 119-6833 | 1 | Decal-Max Load |
| 6 | 93-9899 | 2 | Decal-Warning |

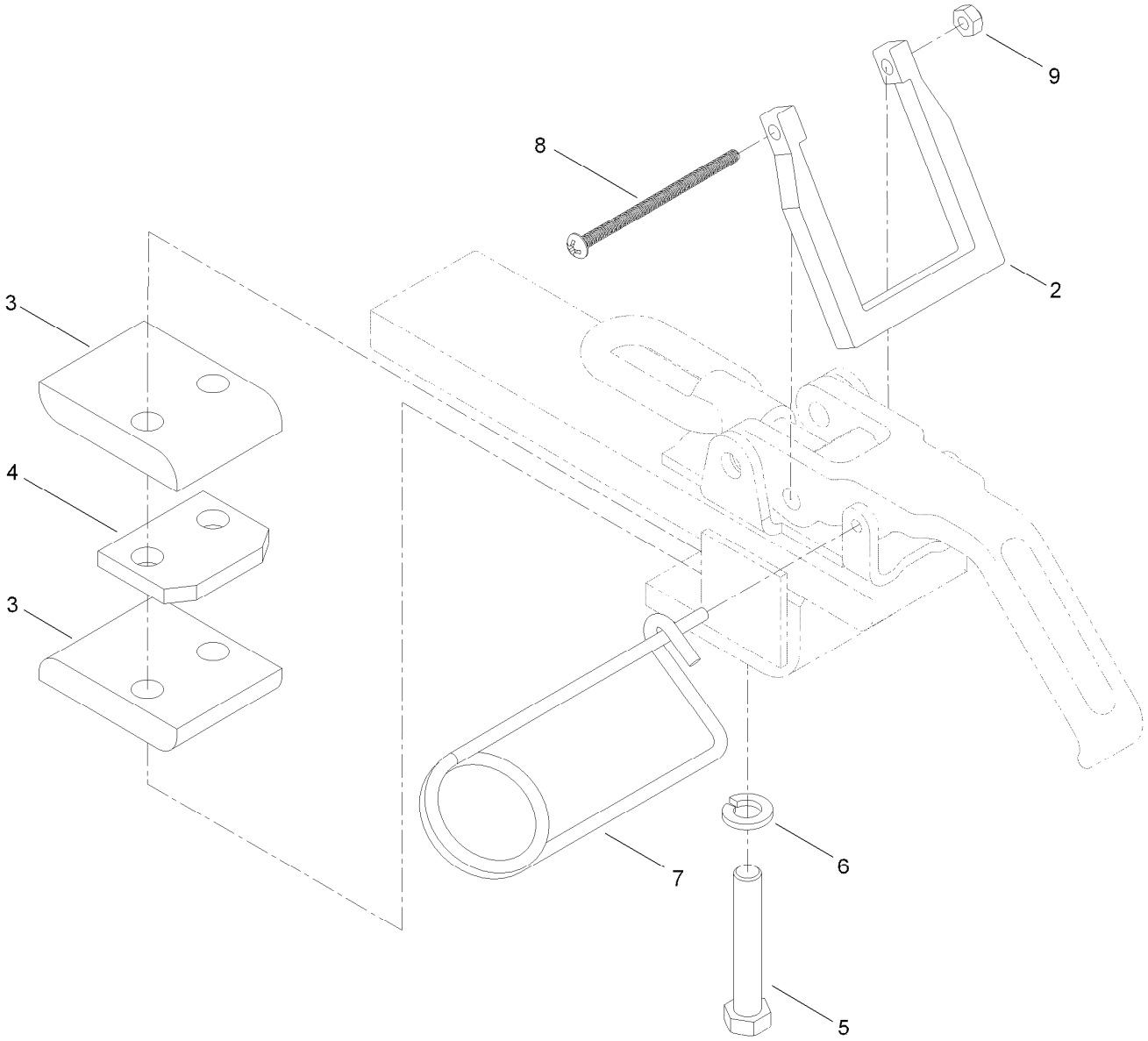


# Attachment Clamp Assembly No. T36015800

| *Ref.* | *Part Number* | *Qty.* | *Description* |
|---|---|---|---|
| 2 | T36015794 | 1 | Lock-Attachment Clamp |
| 3 | T36015200 | 2 | Bar-Bearing |
| 4 | T01-13489B | 1 | Tab-Spacer |
| 5 | 323-11 | 2 | Screw-HH |
| 6 | 3253-21 | 2 | Washer-Lock |
| 7 | T0000-3247 | 1 | Pin-Lock |
| 8 | 120-0884 | 1 | Screw-PRH |
| 9 | 3296-2 | 1 | Nut-Lock, NI |

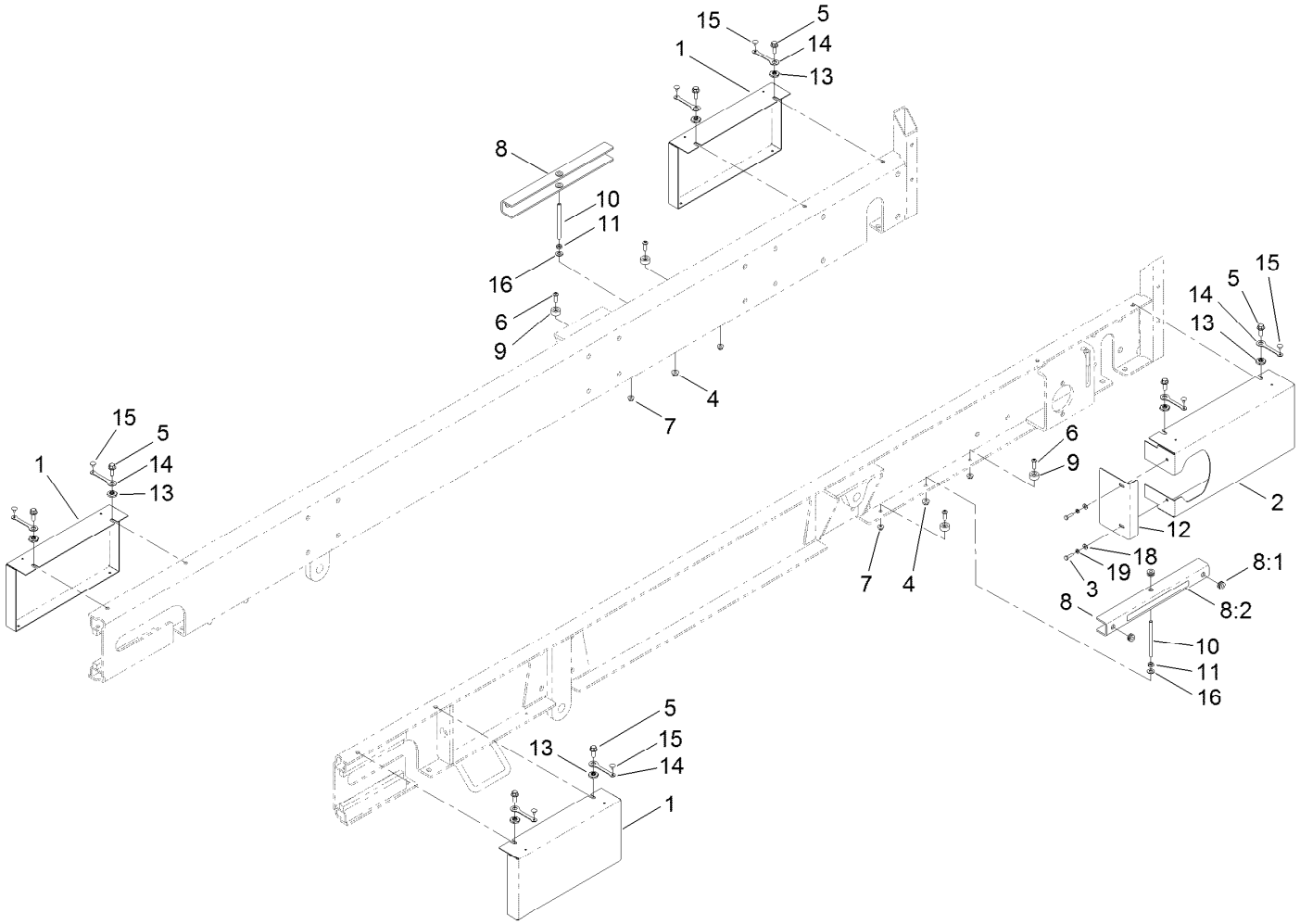


# Guard Assembly

| Ref. | Part Number | Qty. | Description |
|---|---|---|---|
| 1 | T36011630-03 | 3 | Guard-Idler |
| 2 | T36011640-03 | 1 | Guard-Drive |
| 3 | 321-5 | 2 | Screw-HH |
| 4 | 104-8301 | 2 | Nut-Flange, NI |
| 5 | 3234-42 | 8 | Screw-HHF |
| 6 | 3274-104 | 4 | Screw-HSBH |
| 7 | 104-8300 | 4 | Nut-Flange, NI |
| 8 | T36011580 | 2 | Lift Cylinder Stop ASM |
| 8:1 | 92-5972 | 4 | Grommet-Rubber |
| 8:2 | 93-9852 | 1 | Decal-Warning |

| Ref. | Part Number | Qty. | Description |
|---|---|---|---|
| 9 | T0001-3570 | 4 | Spacer-Stop, Lift Cylinder |
| 10 | T36011590 | 2 | Pin-Lift Cylinder Stop |
| 11 | 3218-3 | 2 | Nut-Jam |
| 12 | T0000-5529-03 | 1 | Guard-Motor, Drive |
| 13 | 117-8347 | 8 | Nut-Shoulder |
| 14 | 117-8339 | 8 | Lanyard-3 Inch |
| 15 | 146489 | 8 | Rivet |
| 16 | 3256-24 | 2 | Washer-Flat |
| 18 | 3256-22 | 2 | Washer-Flat |
| 19 | 3253-3 | 2 | Washer-Lock |

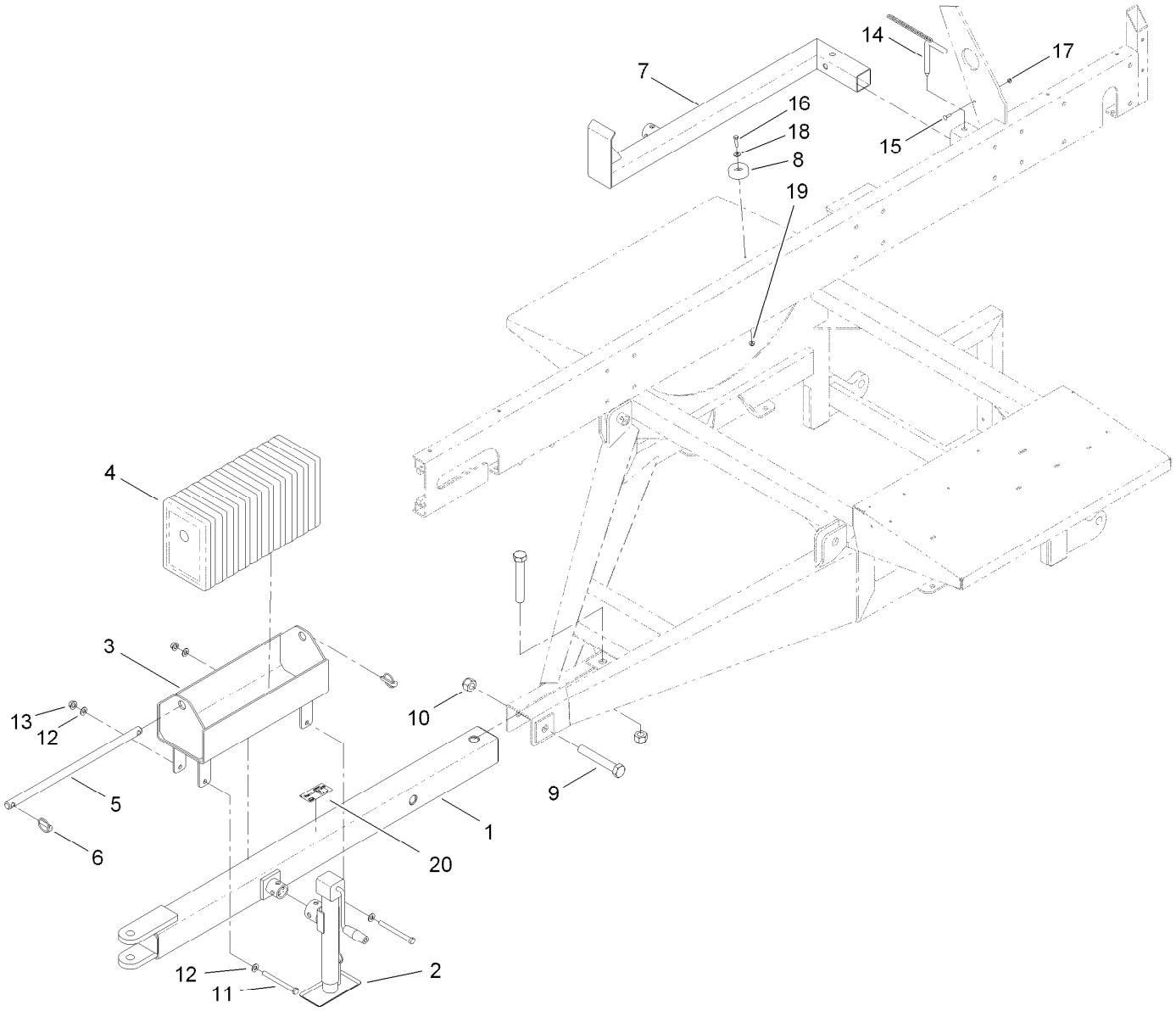


# Hitch Assembly

| Ref. | Part Number | Qty. | Description |
|---|---|---|---|
| 1 | T36012112-01 | 1 | Tube-Hitch |
| 2 | T0000-3423 | 1 | Jack-Sidewind |
| 3 | T36028000-01 | 1 | Box-Weight |
| 4 | 119-6860-01 | 10 | Casting-Counterweight |
| 5 | T36028010-01 | 1 | Shaft-Weight Box |
| 6 | 283-71 | 2 | Pin-Lynch |
| 7 | T36011190-01 | 1 | Leg-Jack |
| 8 | 108-1605 | 1 | Bumper-Recess |
| 9 | 120-0887 | 2 | Screw-HH |
| 10 | 120-0888 | 2 | Nut-HH |

| Ref. | Part Number | Qty. | Description |
|---|---|---|---|
| 11 | 325-22 | 2 | Screw-HH |
| 12 | 3256-26 | 4 | Washer-Flat |
| 13 | 99-5107 | 2 | Nut-Lock |
| 14 | T36011195 | 1 | Pin |
| 15 | 3229-2 | 1 | Screw-CARR |
| 16 | 322-6 | 1 | Screw-HH |
| 17 | 104-7201 | 1 | Nut-Flange, NI |
| 18 | 3256-3 | 1 | Washer-Flat |
| 19 | 104-8300 | 1 | Nut-Flange, NI |
| 20 | 119-6836 | 1 | Decal-Weight Case |

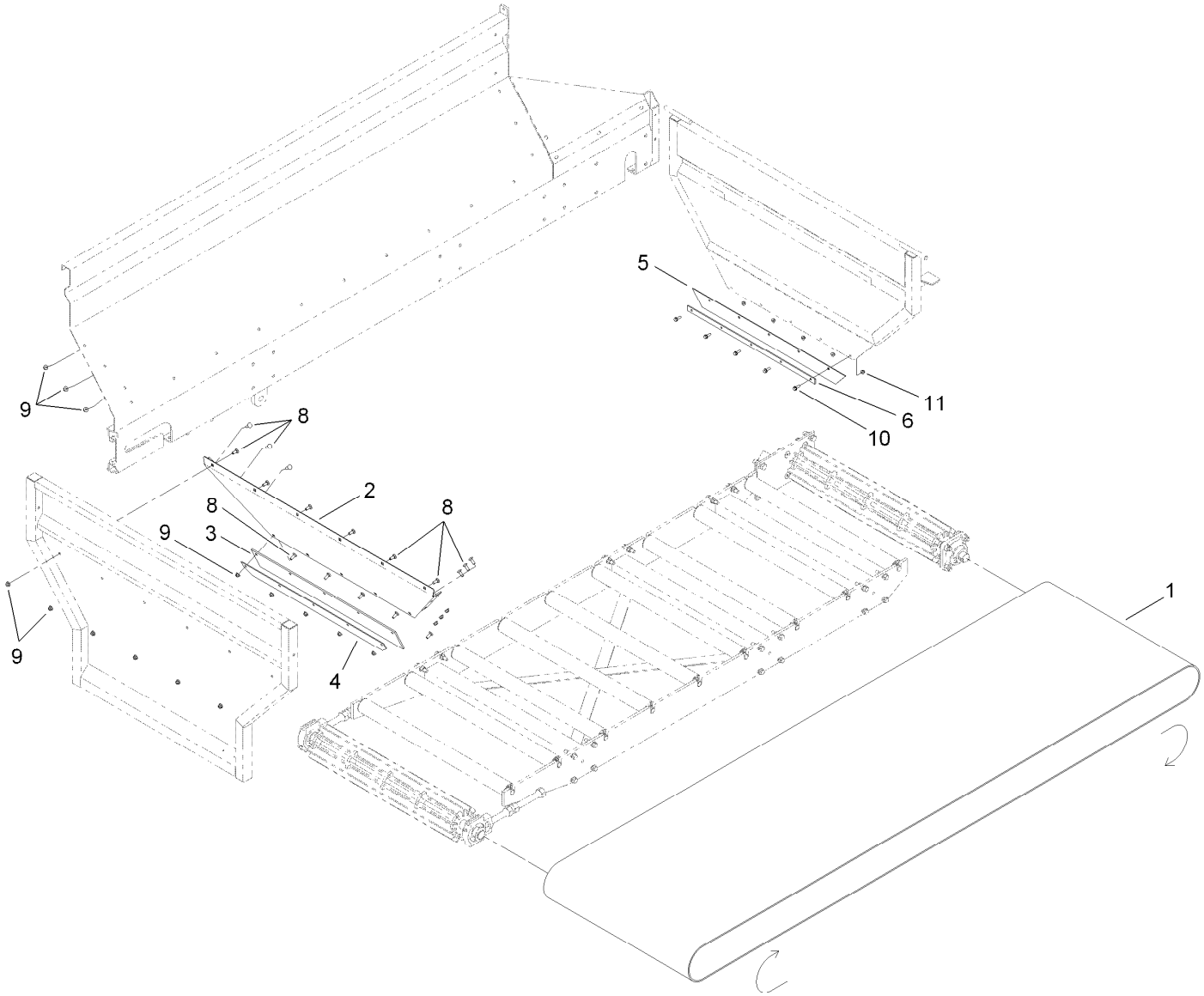


# Belt and Skirting Assembly

| *Ref.* | *Part Number* | *Qty.* | *Description* |
|---|---|---|---|
| 1 | T60191215 | 1 | Belt-Endless |
| 2 | T36011525-01 | 1 | Panel-Sloped |
| 3 | T01-22002B | 1 | Skirt-Front Seal, Rubber |
| 4 | T36011535-01 | 1 | Bar-Front Seal |
| 5 | T36013010 | 1 | Seal-Belt |
| 6 | T36011230-01 | 1 | Retainer-Belt Seal |
| 8 | 3231-22 | 17 | Screw-CARR |
| 9 | 104-8301 | 17 | Nut-Flange, NI |
| 10 | 3234-29 | 5 | Screw-HHF |
| 11 | 104-8300 | 5 | Nut-Flange, NI |

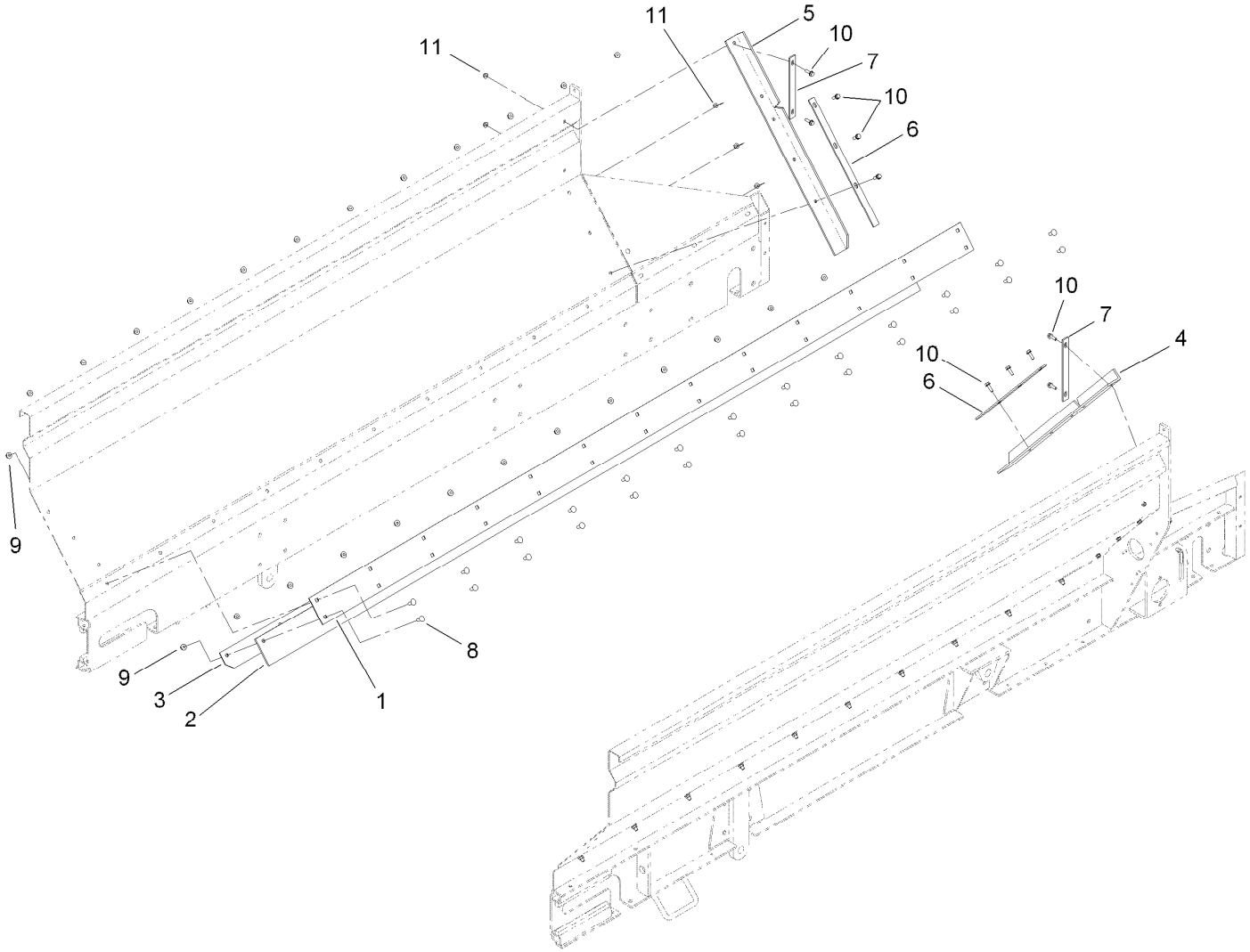


# Skirting Assembly

| Ref. | Part Number | Qty. | Description |
|---|---|---|---|
| 1 | T36011520-01 | 2 | Panel-Side Seal |
| 2 | T01-22000B | 2 | Seal-Rubber, Side |
| 3 | T36011530-01 | 2 | Bar-Side Seal |
| 4 | T36011260 | 1 | Seal-Tailgate, LH |
| 5 | T36011270 | 1 | Seal-Tailgate, RH |
| 6 | T36011280-01 | 2 | Bar-Seal, Lower |
| 7 | T36011290-01 | 2 | Bar-Seal, Upper |
| 8 | 3231-22 | 52 | Screw-CARR |
| 9 | 104-8301 | 52 | Nut-Flange, NI |
| 10 | 3234-29 | 10 | Screw-HHF |
| 11 | 104-8300 | 10 | Nut-Flange, NI |

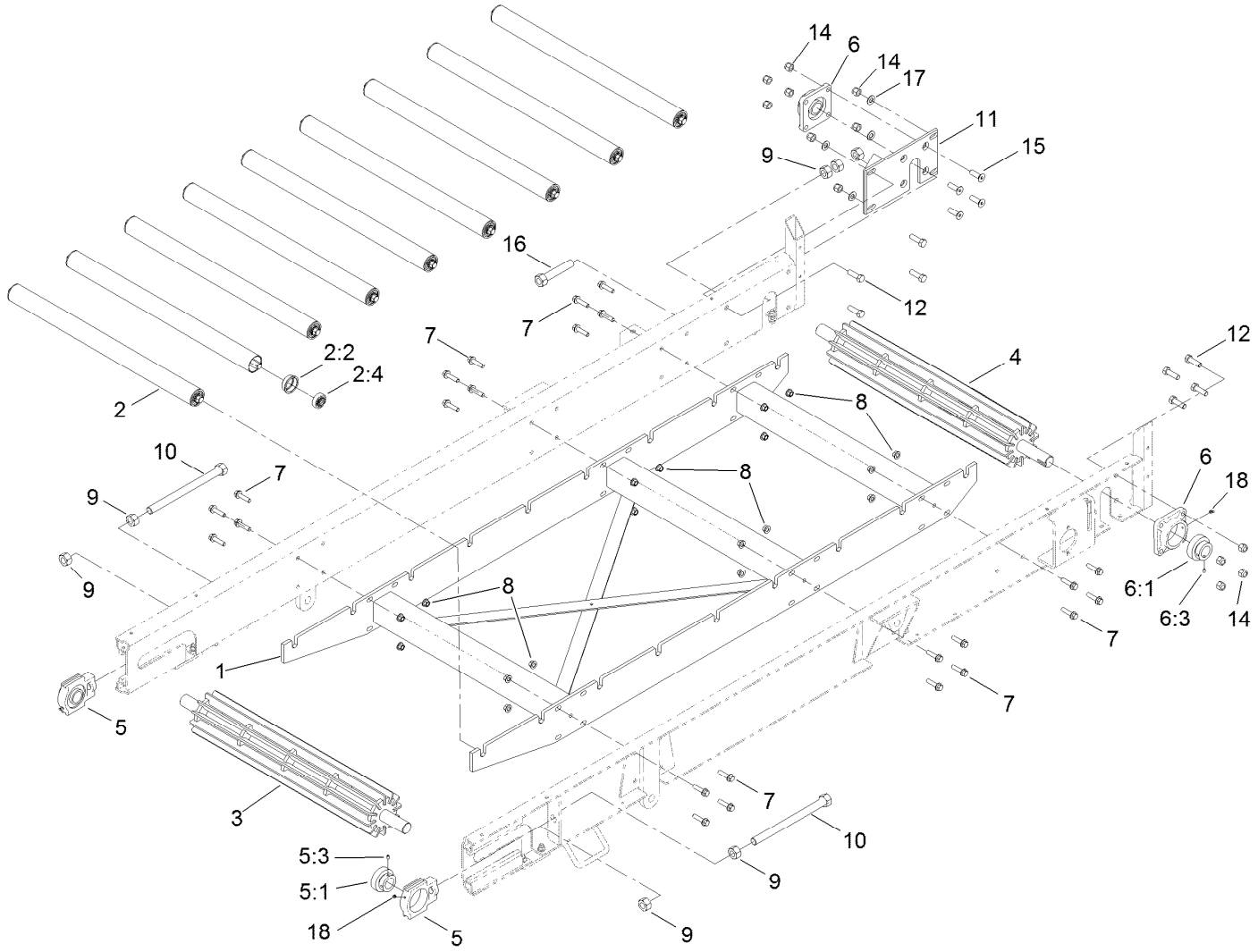


# Conveyor Assembly

| Ref. | Part Number | Qty. | Description |
|---|---|---|---|
| 1 | T36011600-01 | 1 | Frame-Roller |
| 2 | T36011680 | 9 | Belt Roller ASM |
| 2:2 | T36011685 | 2 | Insert-Roller |
| 2:4 | T60111000 | 2 | Bearing-Ball |
| 3 | T36011620-03 | 1 | Idler Roller ASM |
| 4 | 119-6892-03 | 1 | Roller-Drive |
| 5 | T60114305 | 2 | Take-Up Bearing ASM |
| 5:1 | 120-0817 | 1 | Bearing-Collar, Lock |
| 5:3 | 3246-17 | 1 | Setscrew-HSH |
| 6 | T60116355 | 2 | 4-Bolt Bearing ASM |
| 6:1 | 120-0817 | 1 | Bearing-Collar, Lock |
| 6:3 | 3246-17 | 1 | Setscrew-HSH |

| Ref. | Part Number | Qty. | Description |
|---|---|---|---|
| 7 | 3234-27 | 24 | Screw-HHF |
| 8 | 99-5107 | 24 | Nut-Lock |
| 9 | SG330081 | 7 | Nut-Hex |
| 10 | T36011670 | 2 | Rod-Tensioner |
| 11 | T36011690-01 | 1 | Plate-Mounting |
| 12 | 327-6 | 8 | Screw-HH |
| 14 | 3296-53 | 12 | Nut-Lock, NI |
| 15 | 120-0904 | 4 | Screw-HSH |
| 16 | T36011675 | 1 | Rod-Lock |
| 17 | 3256-27 | 4 | Washer-Flat |
| 18 | 302-10 | 4 | Fitting-Grease |

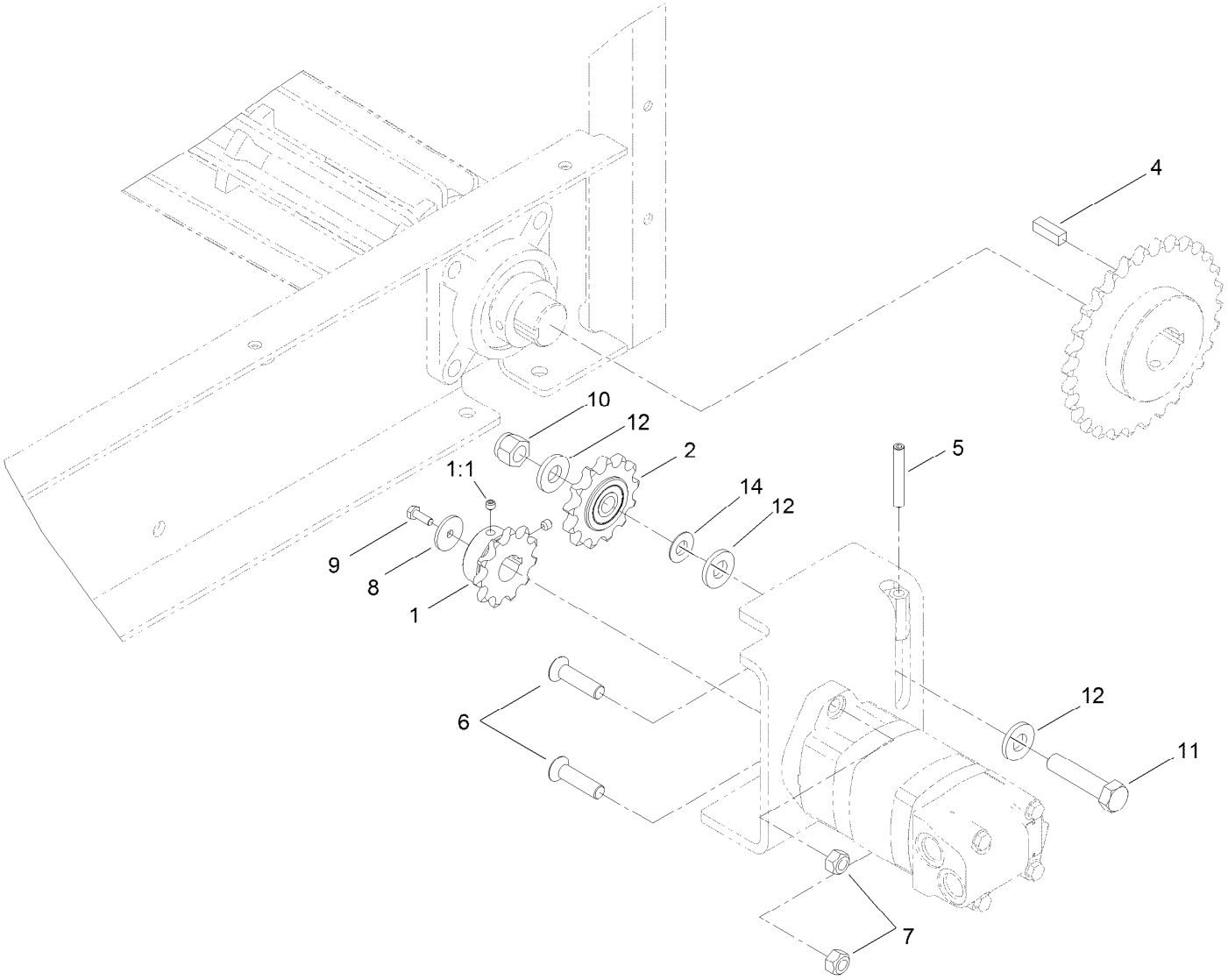


# Chain Drive Assembly

| *Ref.* | *Part Number* | *Qty.* | *Description* |
|---|---|---|---|
| 1 | T60135010 | 1 | Sprocket |
| 1:1 | 3246-2 | 2 | Screw-Set, HSH |
| 2 | T60134090 | 1 | Sprocket |
| 4 | T36011810 | 1 | Key |
| 5 | 120-0909 | 1 | Screw-HSH |
| 6 | 120-0898 | 2 | Screw-Fhhs |
| 7 | 97-1206 | 2 | Locknut |
| 8 | 103995 | 1 | Washer |
| 9 | 321-4 | 1 | Screw-HH |
| 10 | 3296-53 | 1 | Nut-Lock, NI |
| 11 | 327-8 | 1 | Screw-HH |
| 12 | 99-7667 | 3 | Washer-Flat |
| 14 | 3256-27 | 1 | Washer-Flat |

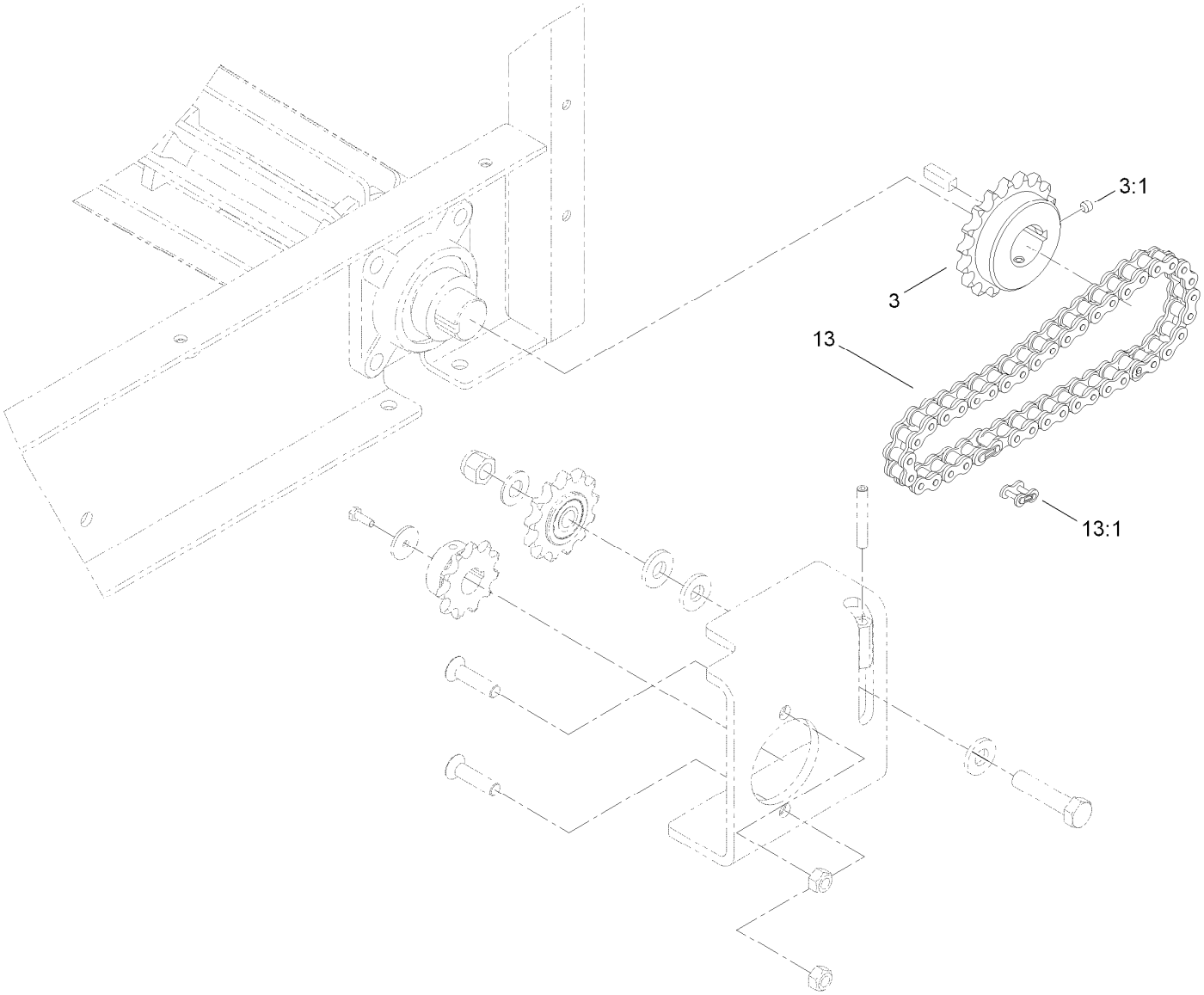


# Chain and Sprocket Assembly

| *Ref.* | *Part Number* | *Qty.* | *Description* |
|---|---|---|---|
| 3 | T0000-8137 | 1 | Sprocket |
| 3:1 | 3247-2 | 2 | Screw-Set, HSH |
| 13 | T36011805 | 1 | Chain-Drive, 33 Inch |
| 13:1 | T60151016 | 1 | Link-Connecting, #60 |

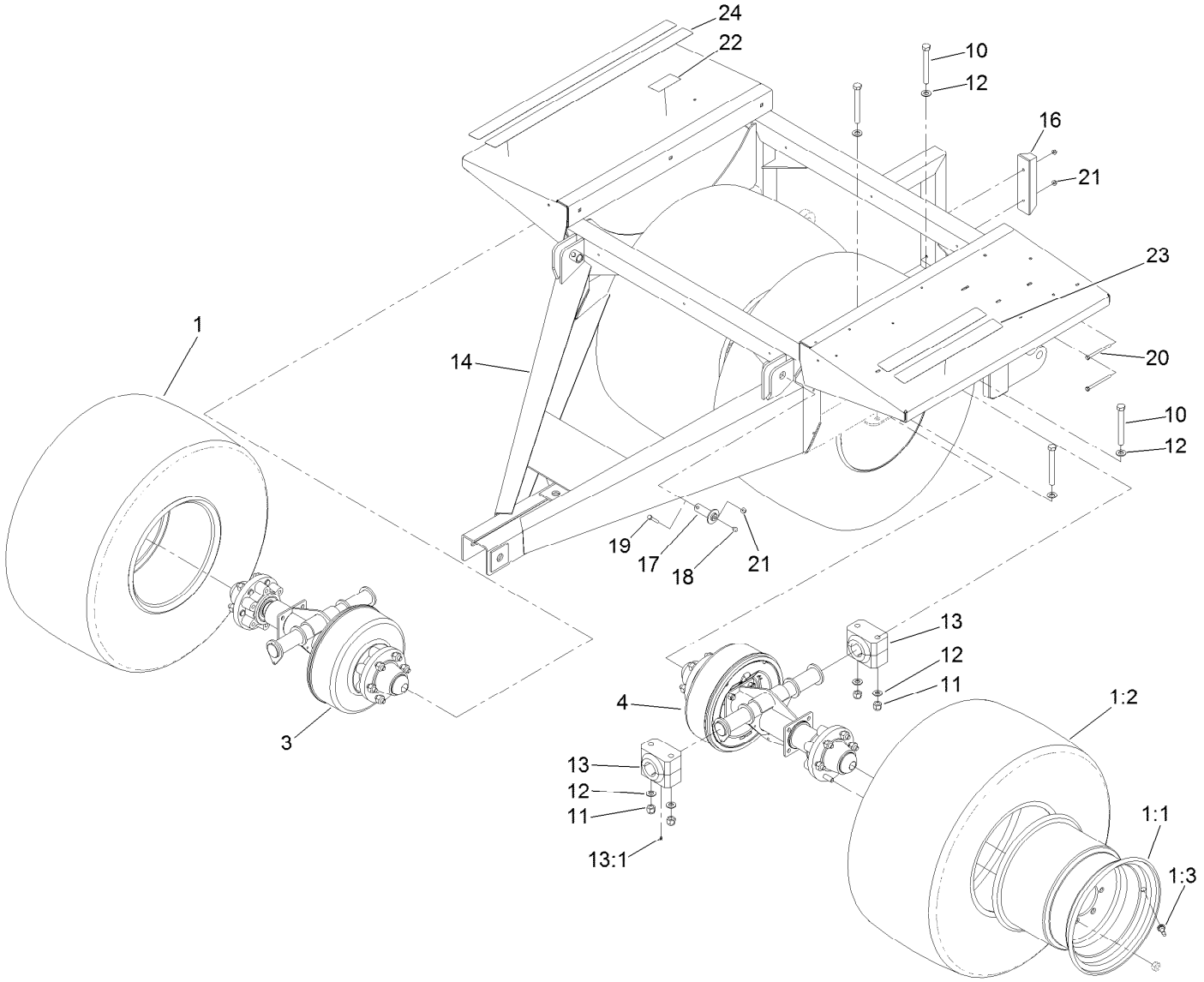


# Wheel and Frame Assembly

| Ref. | Part Number | Qty. | Description |
|---|---|---|---|
| 1 | 120-9410 | 4 | Wheel And Tire ASM |
| 1:1 | 120-9411 | 1 | Wheel-Turf |
| 1:2 | 120-9412 | 1 | Tire-Turf |
| 1:3 | 232-24 | 1 | Stem-Valve |
| 3 | 120-9401 | 1 | RH Shaft ASM |
| 4 | 120-9402 | 1 | LH Shaft ASM |
| 10 | 120-0923 | 8 | Screw-HH |
| 11 | 120-0924 | 8 | Nut-Lock, NI |
| 12 | 119-1868 | 16 | Washer |
| 13 | T60111196 | 4 | Bearing-Polyurethane |
| 13:1 | 302-19 | 1 | Fitting-Grease |

| Ref. | Part Number | Qty. | Description |
|---|---|---|---|
| 14 | 125-0166-01 | 1 | Frame |
| 16 | T62011021 | 1 | Bumper-Rubber |
| 17 | T36012070-01 | 2 | Pin-Hinge |
| 18 | 302-2 | 2 | Fitting-Grease |
| 19 | 322-10 | 2 | Screw-HH |
| 20 | 322-19 | 2 | Screw-HH |
| 21 | 104-8300 | 4 | Nut-Flange, NI |
| 22 | 119-6835 | 1 | Decal-Jack |
| 23 | T36013050 | 2 | Thread-Walk, Safety |
| 24 | T36013052 | 2 | Thread-Walk, Safety |

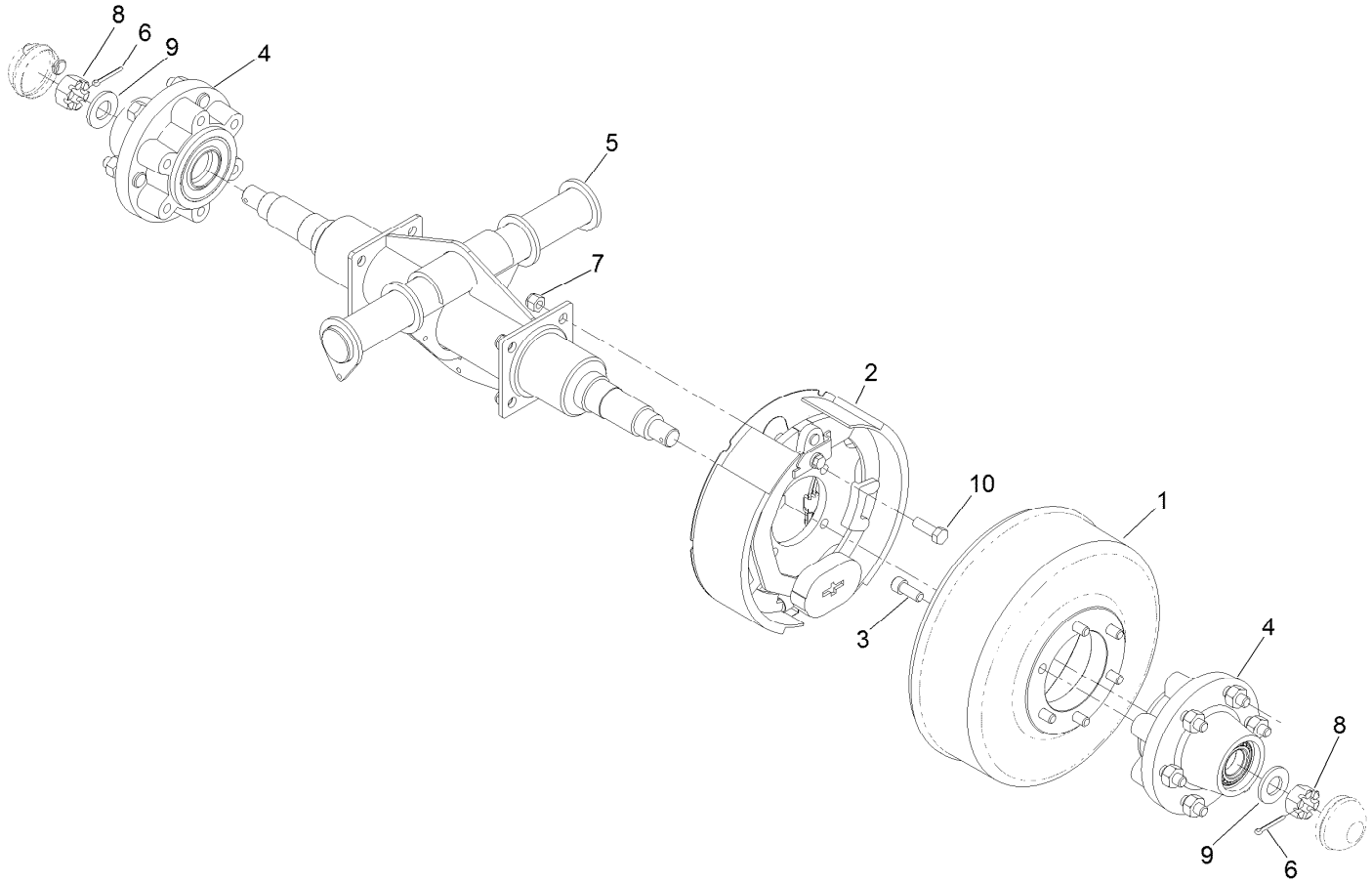


# RH Shaft Assembly No. 120-9401

| *Ref.* | *Part Number* | *Qty.* | *Description* |
|---|---|---|---|
| 1 | 119-6871 | 1 | Drum-Brake |
| 2 | 120-9437 | 1 | LH Brake ASM |
| 3 | 120-0940 | 6 | Screw-HSH |
| 4 | 120-9404 | 2 | Hub ASM |
| 5 | 120-9405-03 | 1 | Beam-Walking |
| 6 | 3272-23 | 2 | Pin-Cotter |
| 7 | 3296-19 | 4 | Nut-Hex |
| 8 | 32136-11 | 2 | Nut-Hex, Slot |
| 9 | T54051068 | 2 | Washer-Spindle |
| 10 | 325-6 | 4 | Screw-HH |

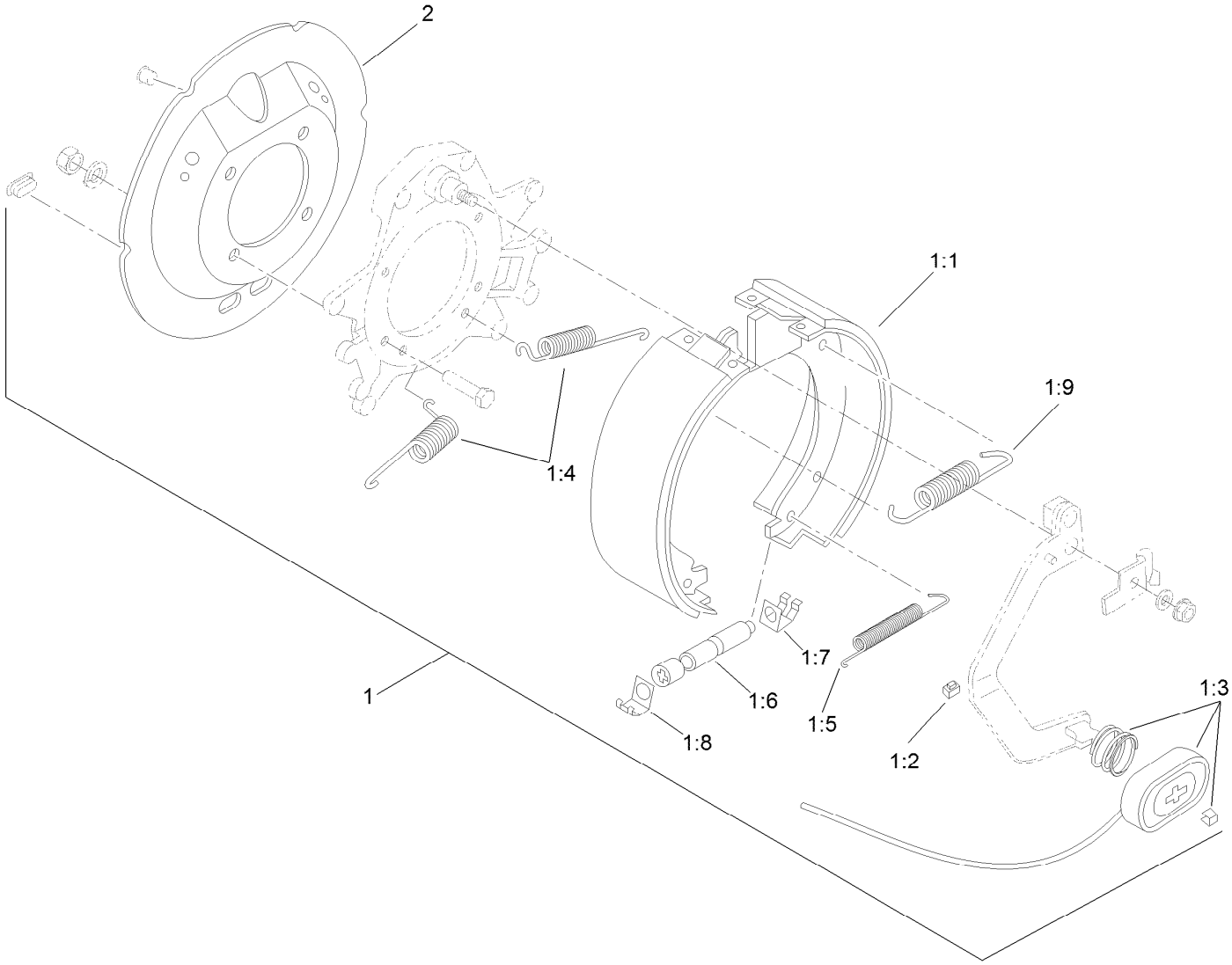


# LH Brake Assembly No. 120-9437

| *Ref.* | *Part Number* | *Qty.* | *Description* |
|---|---|---|---|
| 1 | | 1 | Brake-LH ● |
| 1:1 | 120-9441 | 1 | LH Shoe And Lining Kit |
| 1:2 | 120-9443 | 1 | Clip-Wire |
| 1:3 | 120-9444 | 1 | Magnet Kit |
| 1:4 | 120-9445 | 2 | Spring-Centering |
| 1:5 | 120-9446 | 1 | Spring-Adjuster |
| 1:6 | 120-9447 | 1 | Adjuster Assembly |
| 1:7 | 120-9448 | 1 | Clip-Adjuster |
| 1:8 | 120-9449 | 1 | Clip-Adjuster |
| 1:9 | 120-9396 | 1 | Spring-Return |
| 2 | 120-9433 | 1 | Cover-Dust, Brake |

● Not serviced separately

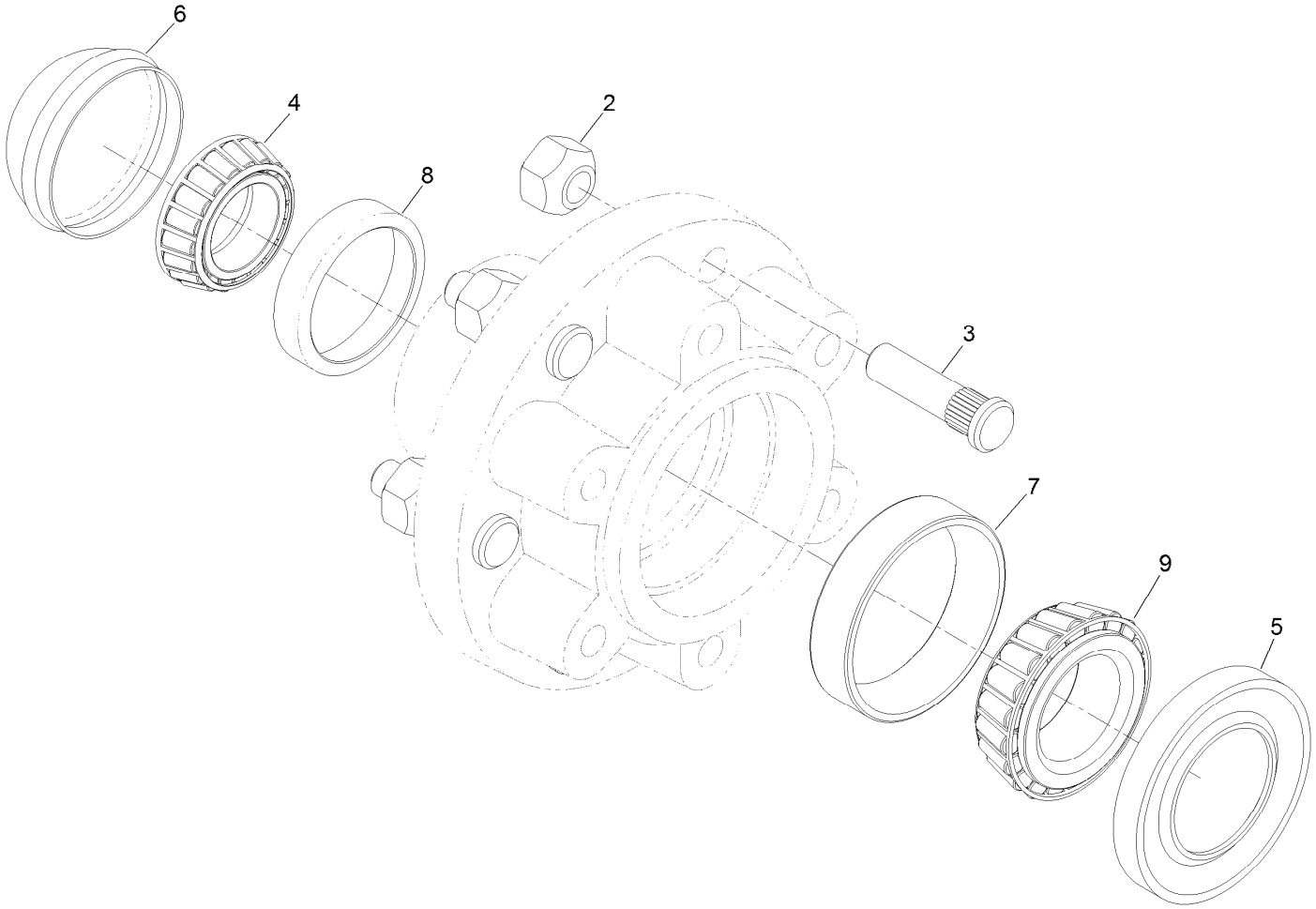


# Hub Assembly No. 120-9404

| *Ref.* | *Part Number* | *Qty.* | *Description* |
|---|---|---|---|
| 2 | T54031040 | 6 | Nut-Wheel |
| 3 | T54031042 | 6 | Stud-Wheel |
| 4 | T54051010 | 1 | Bearing-Hub, Outer |
| 5 | T54051019 | 1 | Seal-Bearing |
| 6 | T54051026 | 1 | Cap-Hub (5000/6000 Lb.) |
| 7 | T54051037 | 1 | Race-Bearing, Inner |
| 8 | T54051042 | 1 | Races-Bearing, Outer |
| 9 | T54051100 | 1 | Bearing-Hub, Inner |

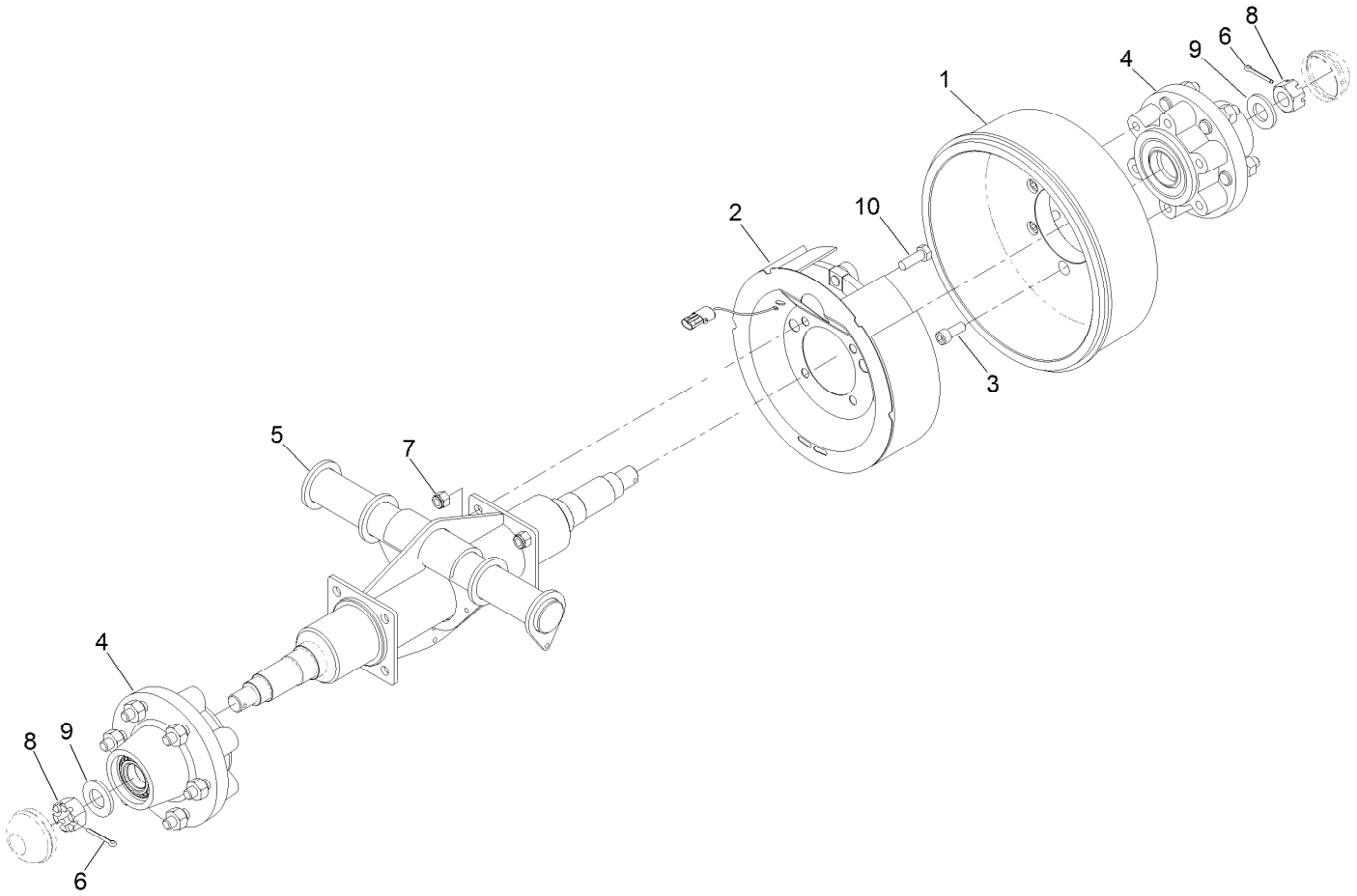


# LH Shaft Assembly No. 120-9402

| *Ref.* | *Part Number* | *Qty.* | *Description* |
|---|---|---|---|
| 1 | 119-6871 | 1 | Drum-Brake |
| 2 | 120-9436 | 1 | RH Brake ASM |
| 3 | 120-0940 | 6 | Screw-HSH |
| 4 | 120-9404 | 2 | Hub ASM |
| 5 | 120-9405-03 | 1 | Beam-Walking |
| 6 | 3272-23 | 2 | Pin-Cotter |
| 7 | 3296-19 | 4 | Nut-Hex |
| 8 | 32136-11 | 2 | Nut-Hex, Slot |
| 9 | T54051068 | 2 | Washer-Spindle |
| 10 | 325-6 | 4 | Screw-HH |

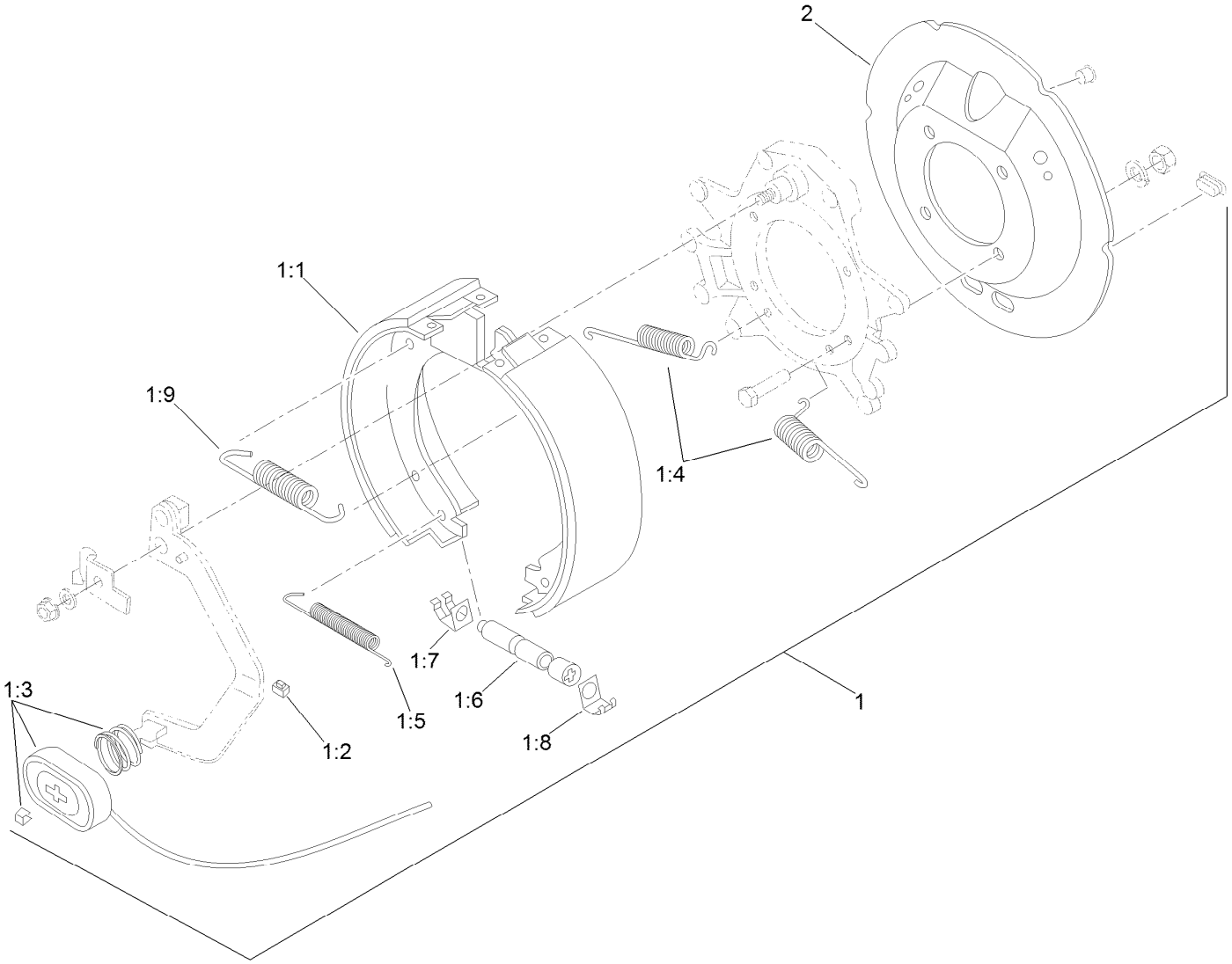


# RH Brake Assembly No. 120-9436

| Ref. | Part Number | Qty. | Description |
|---|---|---|---|
| 1 | | 1 | Brake-RH ● |
| 1:1 | 120-9442 | 1 | RH Shoe And Lining Kit |
| 1:2 | 120-9443 | 1 | Clip-Wire |
| 1:3 | 120-9444 | 1 | Magnet Kit |
| 1:4 | 120-9445 | 2 | Spring-Centering |
| 1:5 | 120-9446 | 1 | Spring-Adjuster |
| 1:6 | 120-9447 | 1 | Adjuster Assembly |
| 1:7 | 120-9448 | 1 | Clip-Adjuster |
| 1:8 | 120-9449 | 1 | Clip-Adjuster |
| 1:9 | 120-9396 | 1 | Spring-Return |
| 2 | 120-9433 | 1 | Cover-Dust, Brake |

● Not serviced separately

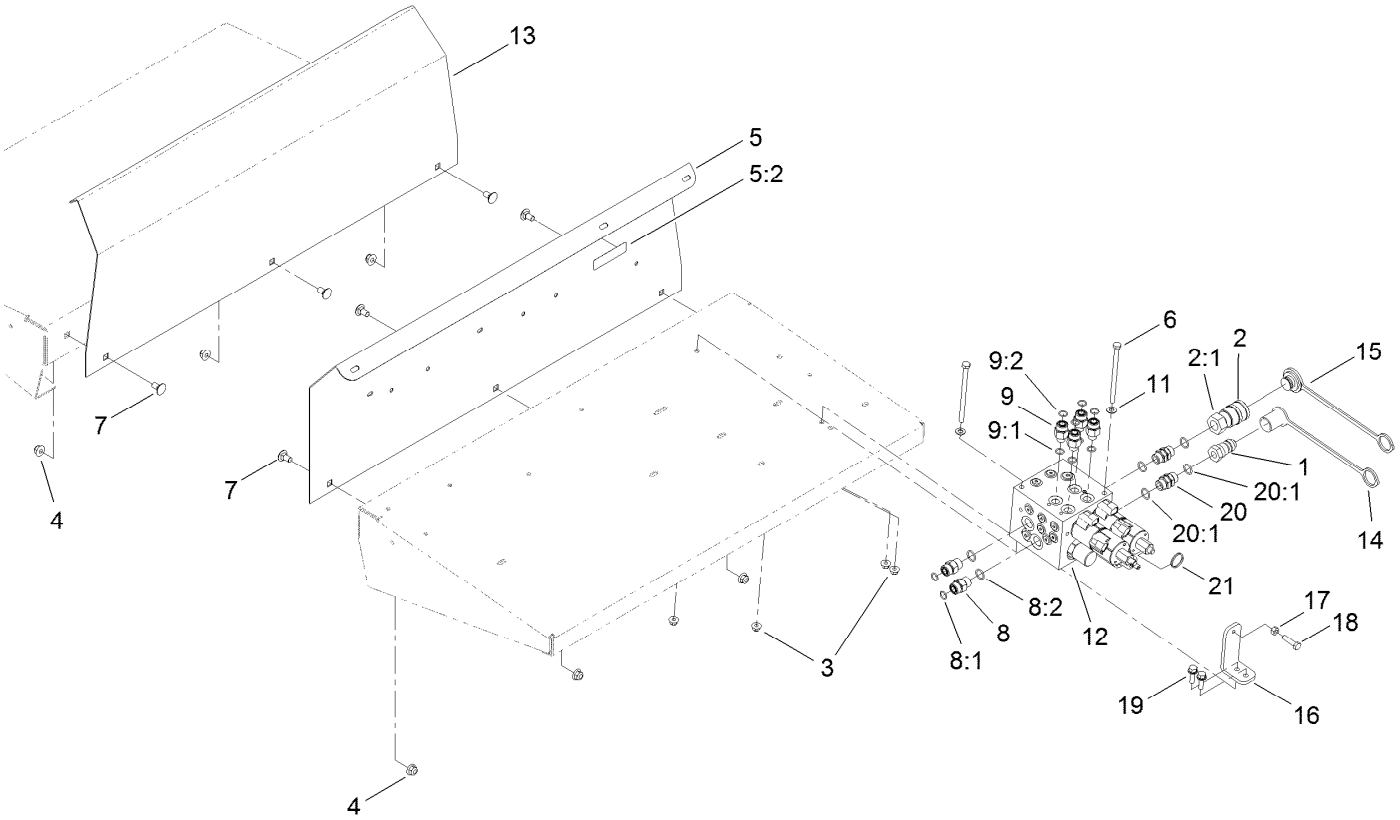


# Hydraulic Manifold Block and Fitting Assembly

| Ref. | Part Number | Qty. | Description |
|---|---|---|---|
| 1 | 98-4698 | 1 | Male-Disconnect, Quick |
| 2 | 98-4699 | 1 | Female-Disconnect, Quick |
| 2:1 | 100-4165 | 1 | Seal Kit |
| 3 | 104-8300 | 4 | Nut-Flange, NI |
| 4 | 104-8301 | 6 | Nut-Flange, NI |
| 5 | 120-0921 | 1 | LH Fender Guard Service ASM |
| 5:2 | 119-0217 | 1 | Decal-Danger |
| 6 | 322-49 | 2 | Bolt-HH |
| 7 | 3231-1 | 6 | Screw-CARR |
| 8 | 340-4 | 2 | Fitting-HYD, Straight |
| 8:1 | 237-30 | 1 | O-Ring |
| 8:2 | 237-79 | 1 | O-Ring |
| 9 | 340-5 | 4 | Fitting-Straight |

| Ref. | Part Number | Qty. | Description |
|---|---|---|---|
| 9:1 | 237-42 | 1 | O-Ring |
| 9:2 | 237-30 | 1 | O-Ring |
| 11 | 3256-23 | 2 | Washer-Flat |
| 12 | T0000-7792 | 1 | HYD Block ASM |
| 13 | T36011720-01 | 1 | Guard-Fender, RH |
| 14 | T56152152 | 1 | Cap-Quick Connect |
| 15 | T56152150 | 1 | Plug-Quick Connect |
| 16 | T0002-4579-01 | 1 | Bracket-Override Manual |
| 17 | 3217-6 | 1 | Nut-Hex |
| 18 | 322-6 | 1 | Screw-HH |
| 19 | 3234-29 | 2 | Screw-HHF |
| 20 | 95-3209 | 2 | Fitting-Thread, Straight |
| 20:1 | 237-79 | 2 | O-Ring |
| 21 | 106-1392 | 1 | Ring-Retaining, Spiral (EXT) |

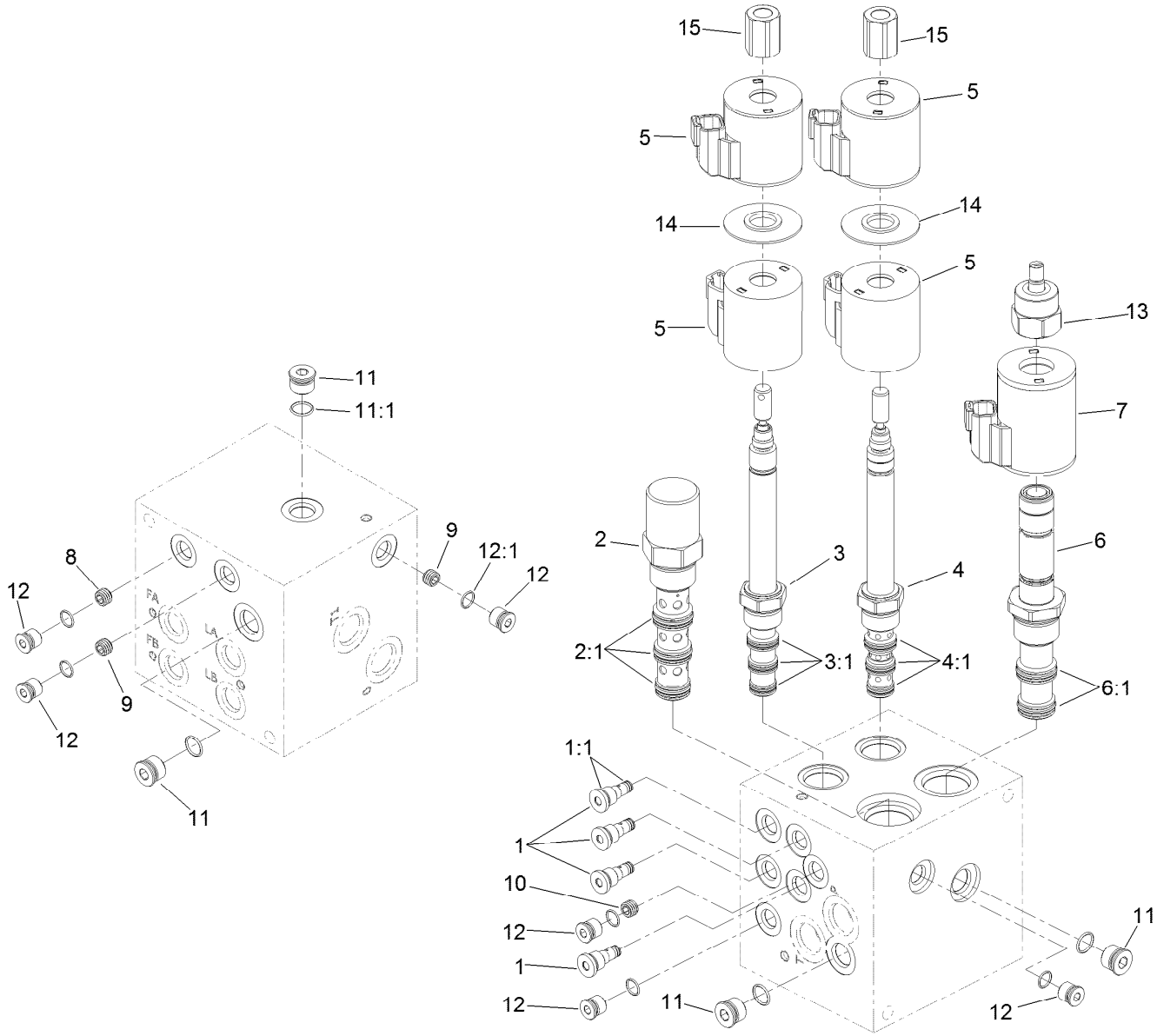


# Hydraulic Block Assembly No. T0000-7792

| Ref. | Part Number | Qty. | Description |
|---|---|---|---|
| 1 | 120-9415 | 4 | Valve-Check |
| 1:1 | 125-0100 | 1 | Seal Kit |
| 2 | 120-9416 | 1 | Valve-Pressure Compensator |
| 2:1 | 110-6111 | 1 | Seal Kit |
| 3 | 120-9417 | 1 | Valve-Solenoid |
| 3:1 | 110-8908 | 1 | Spool Valve Seal Kit |
| 4 | 120-9418 | 1 | Valve-Solenoid |
| 4:1 | 110-8908 | 1 | Spool Valve Seal Kit |
| 5 | 119-4619 | 4 | Coil-Solenoid |
| 6 | 120-9420 | 1 | Valve-Proportional Flow |
| 6:1 | 114-5515 | 1 | Seal Kit |

| Ref. | Part Number | Qty. | Description |
|---|---|---|---|
| 7 | 120-0920 | 1 | Coil-Valve |
| 8 | 110-8883 | 1 | Plug-Orifice (0.040) |
| 9 | 110-8889 | 2 | Plug-Orifice (0.020) |
| 10 | 120-9422 | 1 | Plug-Orifice (0.068) |
| 11 | 353-508 | 4 | Plug-HH |
| 11:1 | 237-42 | 1 | O-Ring |
| 12 | 353-990 | 6 | Plug ASM |
| 12:1 | 237-78 | 1 | O-Ring |
| 13 | 125-0101 | 1 | Nut-Coil |
| 14 | 117-8316 | 2 | Spacer-E Coil |
| 15 | 125-0102 | 2 | Nut-Coil |

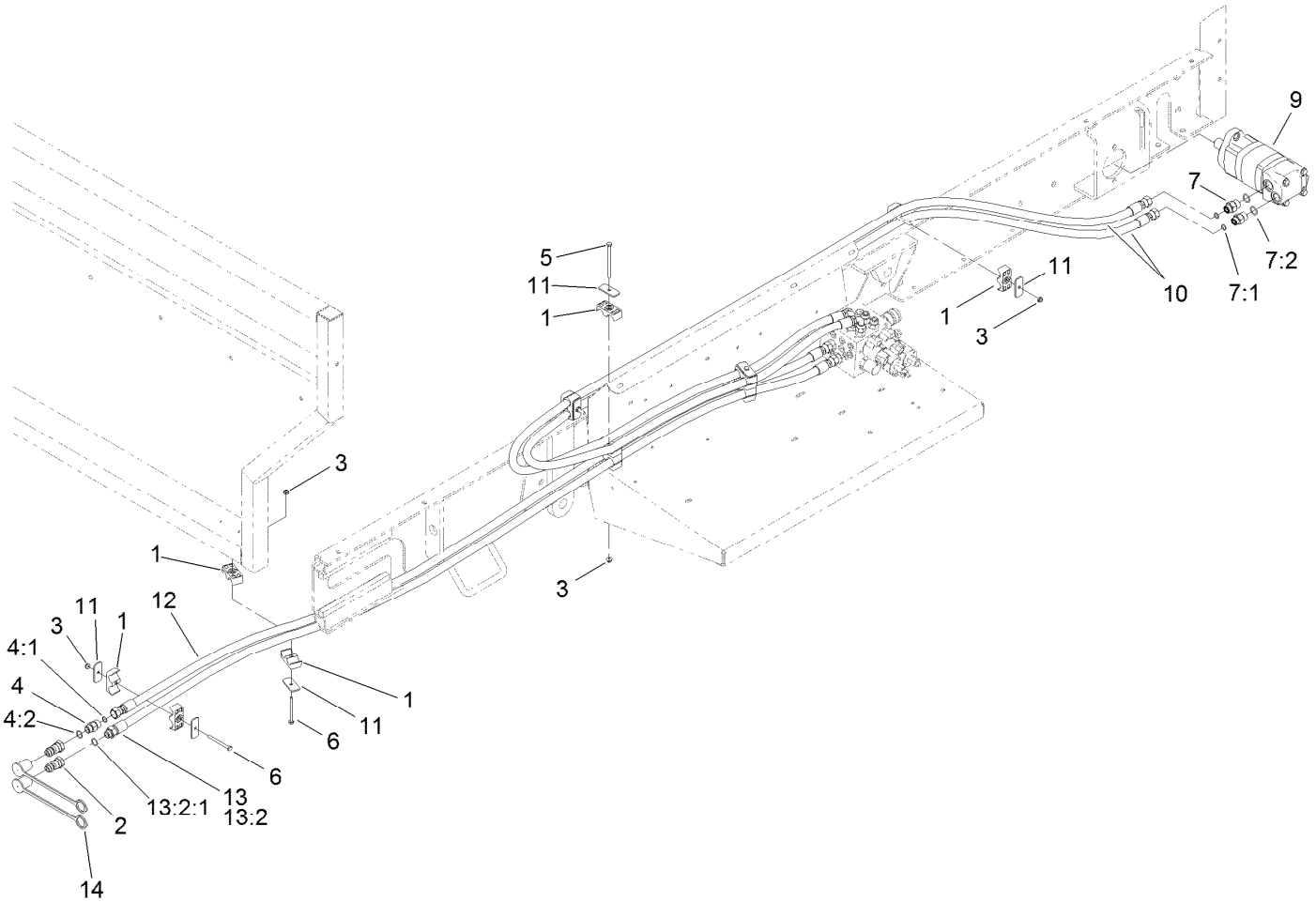


# Hydraulic Motor and Hose Assembly

| Ref. | Part Number | Qty. | Description |
|---|---|---|---|
| 1 | 56-7974 | 16 | Clamp-Tube |
| 2 | 98-4698 | 2 | Male-Disconnect, Quick |
| 3 | 104-7201 | 6 | Nut-Flange, NI |
| 4 | 119-6898 | 1 | Valve-Check, HYD |
| 4:1 | 237-30 | 1 | O-Ring |
| 4:2 | 237-79 | 1 | O-Ring |
| 5 | 321-19 | 2 | Screw-HH |
| 6 | 321-18 | 2 | Screw-HH |
| 7 | 340-6 | 2 | Fitting-HYD, Straight |
| 7:1 | 237-30 | 1 | O-Ring |

| Ref. | Part Number | Qty. | Description |
|---|---|---|---|
| 7:2 | 237-80 | 1 | O-Ring |
| 9 | T0000-5303 | 1 | HYD Motor ASM |
| 10 | 120-0865 | 2 | Hose-HYD |
| 11 | T36033040 | 7 | Plate-Clamp |
| 12 | 120-0866 | 1 | Hose-HYD |
| 13 | 120-0867 | 1 | Hose-HYD |
| 13:2 | | 1 | Fitting-Straight ● |
| 13:2:1 | 237-79 | 1 | O-Ring |
| 14 | T56152152 | 2 | Cap-Quick Connect |

● Not serviced separately

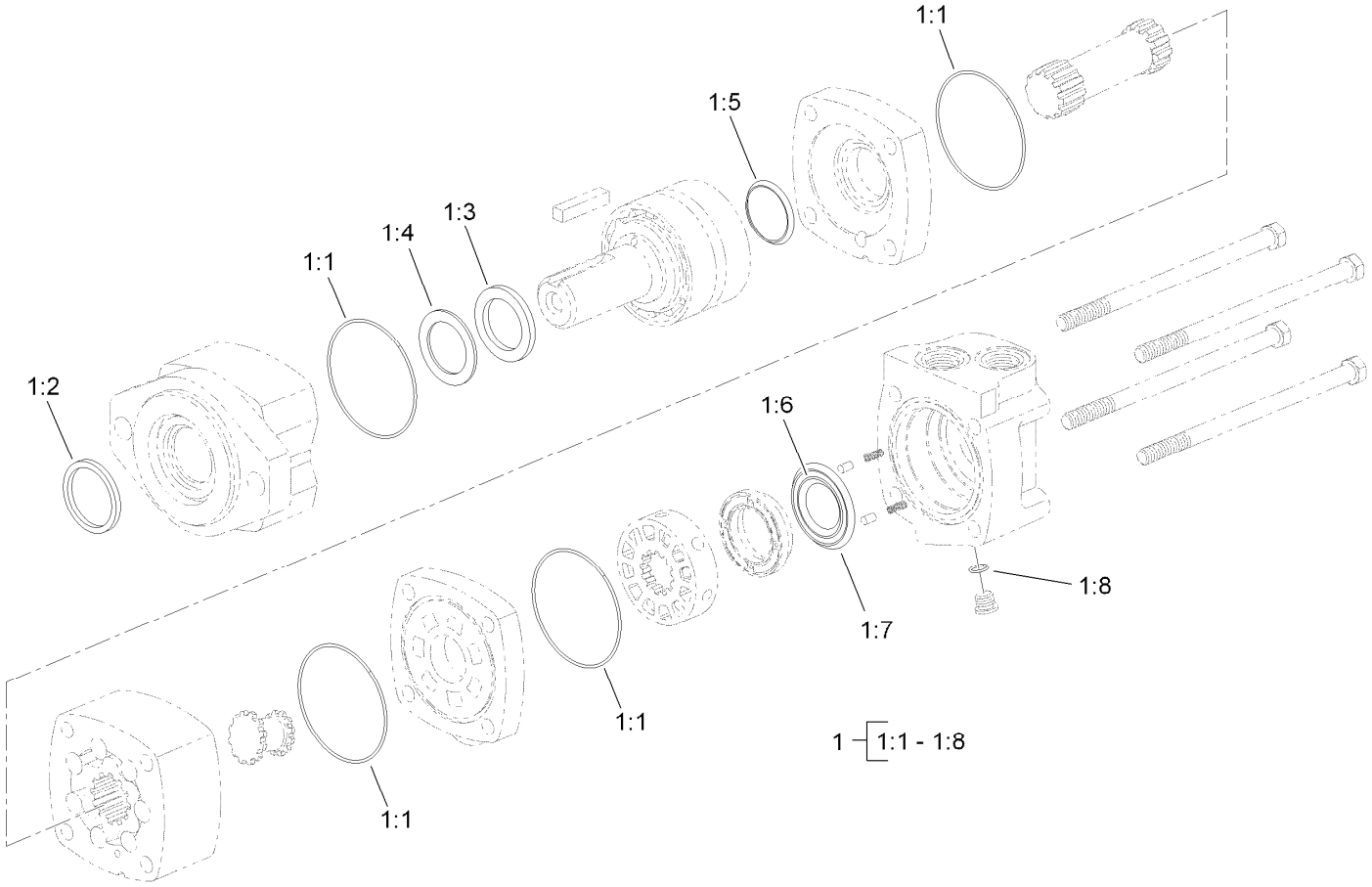


# Hydraulic Motor Assembly No. T0000-5303

| *Ref.* | *Part Number* | *Qty.* | *Description* |
|---|---|---|---|
| 1 | 56-6890 | 1 | Seal Kit |
| 1:1 | | 4 | Seal ● |
| 1:2 | | 1 | Exclusion Seal ● |
| 1:3 | | 1 | Outer Face Seal ● |
| 1:4 | | 1 | Inner Face Seal ● |
| 1:5 | | 1 | Shaft Face Seal ● |
| 1:6 | | 1 | Shaft Seal ● |
| 1:7 | | 1 | Back-Up Washer ● |
| 1:8 | | 1 | O-Ring ● |

● Not serviced separately

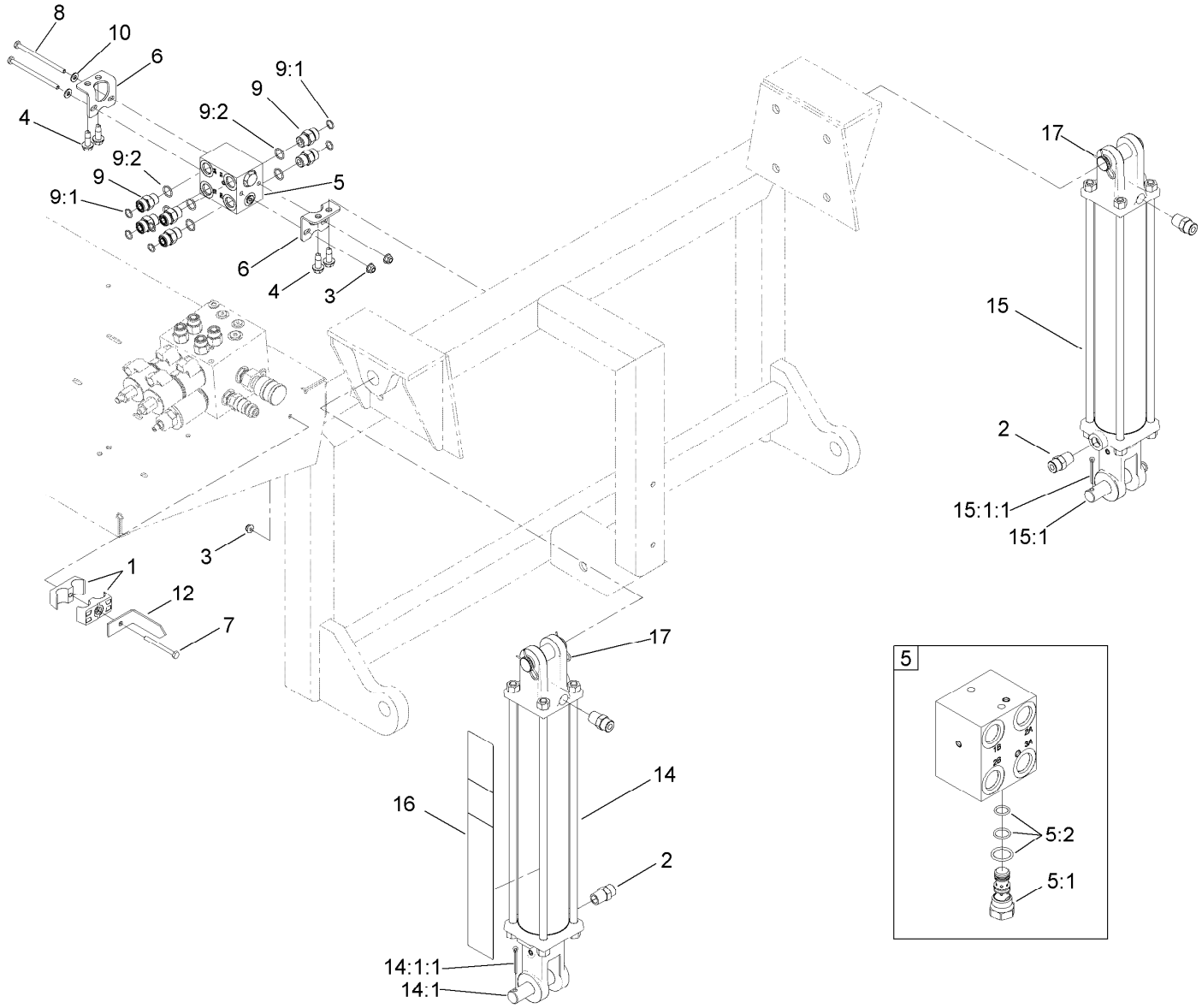


# Hydraulic Cylinder and Manifold Block Assembly

| Ref. | Part Number | Qty. | Description |
|---|---|---|---|
| 1 | 56-7974 | 2 | Clamp-Tube |
| 2 | 93-5107 | 4 | Fitting-Adapter |
| 3 | 104-7201 | 3 | Nut-Flange, NI |
| 4 | 105-6245 | 4 | Screw-Tapping |
| 5 | 120-0849 | 1 | Block-Manifold, Po Check |
| 5:1 | 120-0873 | 1 | Valve-Po Check |
| 5:2 | 120-0886 | 1 | Seal Kit |
| 6 | 120-0875-03 | 2 | Bracket-Mounting, Manifold |
| 7 | 321-18 | 1 | Screw-HH |
| 8 | 321-34 | 2 | Screw-HH |
| 9 | 340-4 | 6 | Fitting-HYD, Straight |
| 9:1 | 237-30 | 1 | O-Ring |

| Ref. | Part Number | Qty. | Description |
|---|---|---|---|
| 9:2 | 237-79 | 1 | O-Ring |
| 10 | 3256-22 | 2 | Washer-Flat |
| 12 | T36011570 | 1 | Bar-Indicator, Lift |
| 14 | T56071160 | 1 | HYD Cylinder ASM |
| 14:1 | 125-0153 | 1 | Pin Kit (Set Of Two) |
| 14:1:1 | 3272-23 | 4 | Pin-Cotter |
| 15 | T56071170 | 1 | HYD Cylinder ASM |
| 15:1 | 125-0153 | 1 | Pin Kit (Set Of Two) |
| 15:1:1 | 3272-23 | 4 | Pin-Cotter |
| 16 | 119-6863 | 1 | Decal-Load Range |
| 17 | 110-4439 | 2 | Clip-Hairpin |

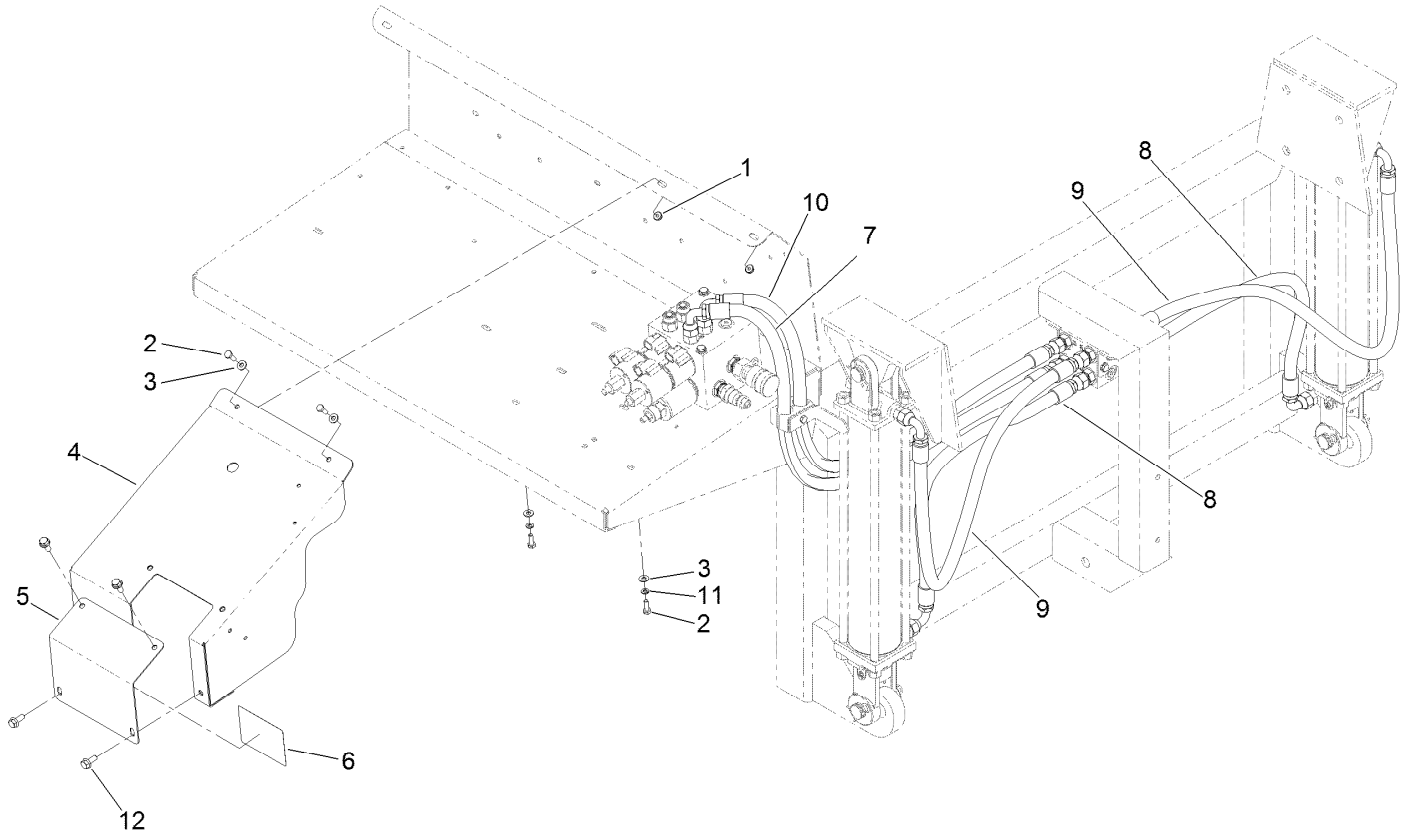


# Block Guard and Hose Assembly

| Ref. | Part Number | Qty. | Description |
|---|---|---|---|
| 1 | 104-7201 | 2 | Nut-Flange, NI |
| 2 | 321-4 | 4 | Screw-HH |
| 3 | 3256-22 | 4 | Washer-Flat |
| 4 | 131-9367-01 | 1 | Guard-Block |
| 5 | T0002-4578-01 | 1 | Plate-Cover, Override |
| 6 | 119-6832 | 1 | Decal-Adjustment |
| 7 | 120-0868 | 1 | Hose-HYD |
| 8 | 120-0869 | 2 | Hose-HYD |
| 9 | 120-0870 | 2 | Hose-HYD |
| 10 | 120-0872 | 1 | Hose-HYD |
| 11 | 3253-3 | 2 | Washer-Lock |
| 12 | 3234-47 | 4 | Screw-HHF |

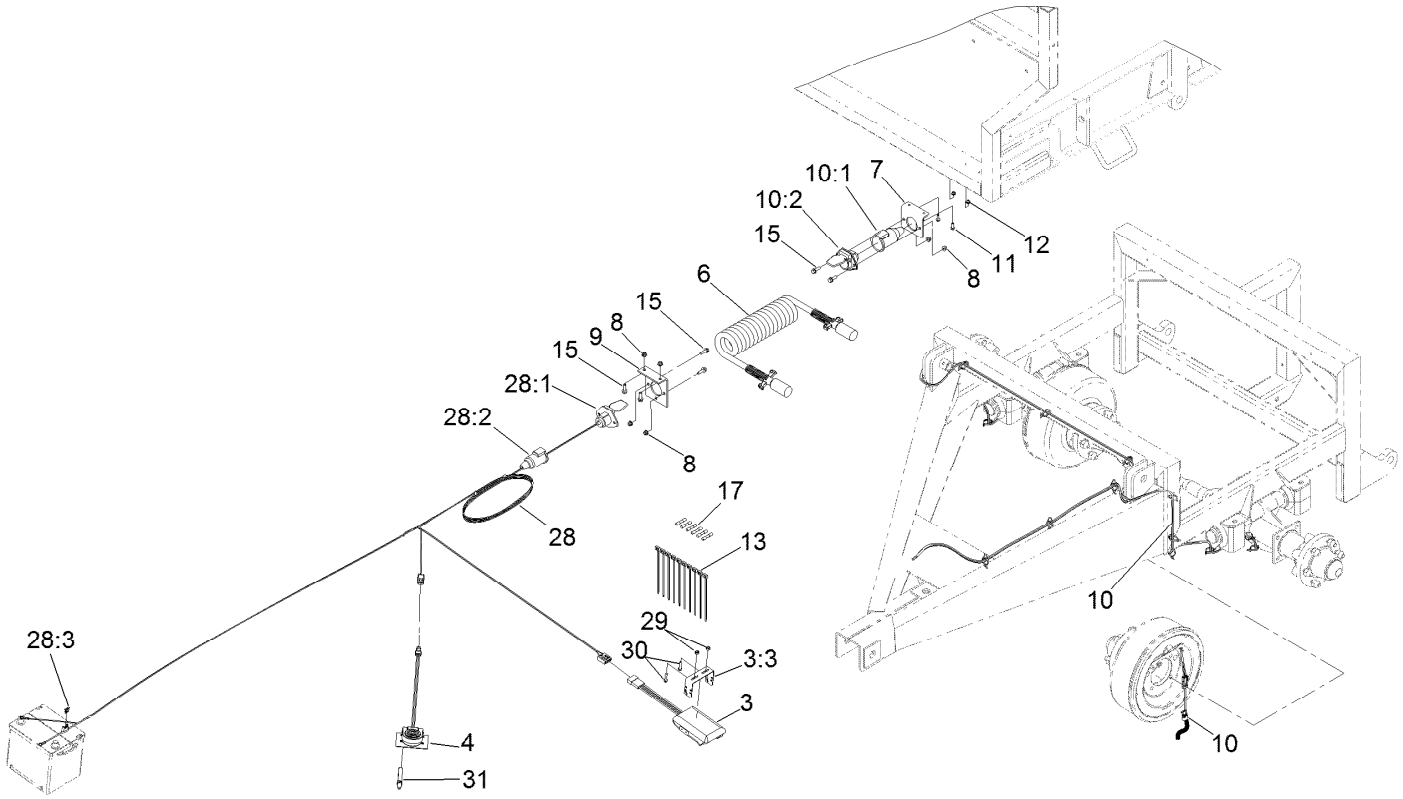


# Brake Assembly

| Ref. | Part Number | Qty. | Description |
|---|---|---|---|
| 3 | 130-4230 | 1 | Controller-Brake |
| 3:3 | 125-0114 | 1 | Bracket-Controller, Brake |
| 4 | 125-0108 | 1 | Control-Foot, |
| 6 | T58071132 | 1 | Cable-Coil, 12 Ft. |
| 7 | 120-0892 | 1 | Bracket-Connector |
| 8 | 104-8300 | 6 | Nut-Flange, NI |
| 9 | T36016080 | 1 | Bracket-Tractor |
| 10 | 120-9438 | 1 | Harness-Wire, Electric Brakes |
| 10:1 | 120-0876 | 1 | Boot-Socket |
| 10:2 | 32160-322 | 1 | Connector-Trailer, 7M |
| 11 | 115-5103 | 2 | Screw-HHF |

| Ref. | Part Number | Qty. | Description |
|---|---|---|---|
| 12 | 104-7201 | 2 | Nut-Flange, NI |
| 13 | 3290-378 | 10 | Tie-Cable |
| 15 | 3234-29 | 6 | Screw-HHF |
| 17 | 32180-046 | 6 | Splice-Heatshrink Covered |
| 28 | 122-0075 | 1 | Harness-Wire, Brake, Trailer |
| 28:1 | 32160-322 | 1 | Connector-Trailer, 7M |
| 28:2 | 120-0876 | 1 | Boot-Socket |
| 28:3 | 218-578 | 1 | Fuse-Blade, 10 Amp |
| 29 | 3296-2 | 2 | Nut-Lock, NI |
| 30 | 106-9169 | 2 | Screw-HWH |
| 31 | 2412-42 | 1 | Clamp-Hose |

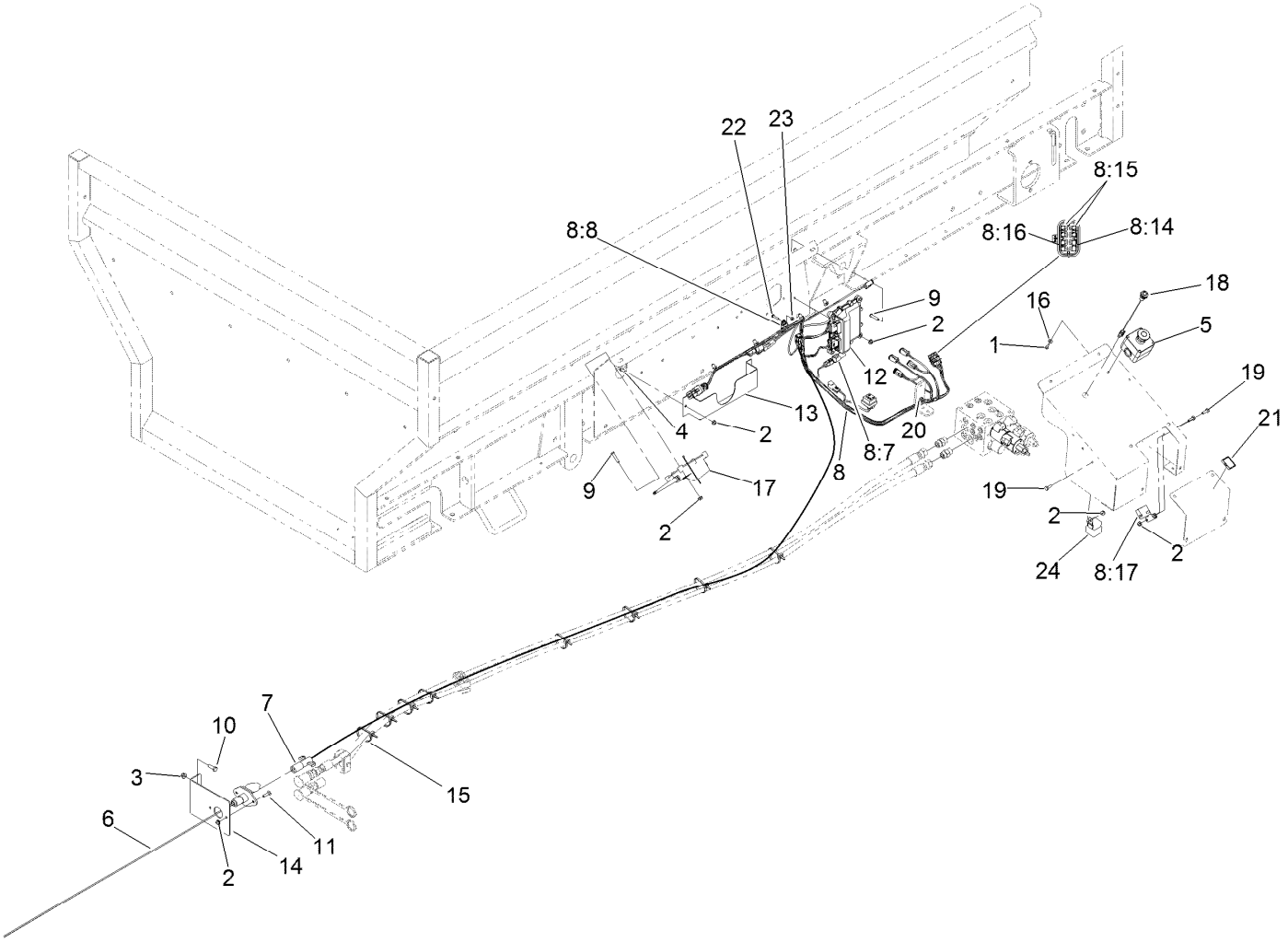


# Wire Harness and Pocket Control Assembly

| Ref. | Part Number | Qty. | Description |
|---|---|---|---|
| 1 | 98-1375 | 2 | Screw-HWH |
| 2 | 104-7201 | 15 | Nut-Flange, NI |
| 3 | 104-8300 | 2 | Nut-Flange, NI |
| 4 | 119-6906 | 2 | Screw-HSBH |
| 5 | 119-6909 | 1 | Stop-Emergency |
| 6 | 120-0976 | 1 | Harness-Wire, Power Lead |
| 7 | 120-0926 | 1 | Harness-Wire, Intermediate Power |
| 8 | 122-0270 | 1 | Harness-Wire |
| 8:7 | 32180-043 | 2 | Resistor-120 Ohm |
| 8:8 | 32180-089 | 1 | Cap-Plug, 3 Way |
| 8:14 | 121-8861 | 1 | Fuse-Mini Blade, 2 Amp |
| 8:15 | 121-8865 | 2 | Fuse-Mini Blade, 7.5 Amp |
| 8:16 | 121-8867 | 1 | Fuse-Mini Blade, 15 Amp |
| 8:17 | 32180-179 | 1 | Cover-Bussman |
| 9 | 120-0834 | 8 | Screw-HSBH |

| Ref. | Part Number | Qty. | Description |
|---|---|---|---|
| 10 | 322-5 | 2 | Screw-HH |
| 11 | 3229-2 | 2 | Screw-CARR |
| 12 | 125-1360 | 1 | Controller |
| 13 | T36016084 | 1 | Pocket-Control, Wireless |
| 14 | T36054020 | 1 | Bracket-Socket |
| 15 | 3290-378 | 8 | Tie-Cable |
| 16 | 3256-14 | 2 | Washer-Flat |
| 17 | 132-9600 | 1 | Controller |
| 18 | 122-0630 | 1 | Lamp-Led, Red Indicator |
| 19 | 321-4 | 3 | Screw-HH |
| 20 | 32180-030 | 2 | Clip-Tie |
| 21 | 131-6766 | 1 | Decal-Fuses |
| 22 | 106-9169 | 1 | Screw-HWH |
| 23 | 3296-2 | 1 | Nut-Lock, NI |
| 24 | 99-7430 | 1 | Relay |

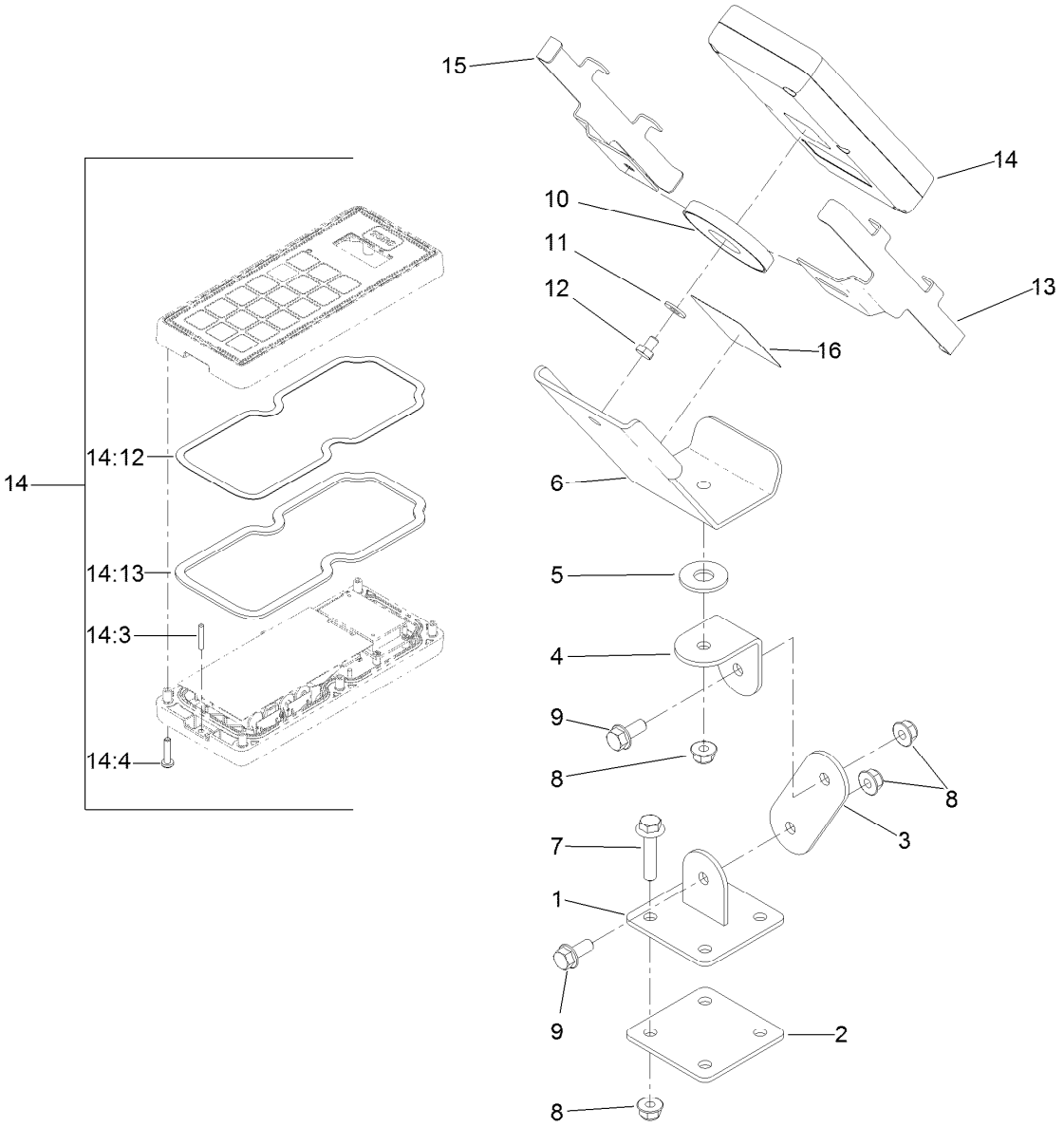


# Wireless Remote Assembly

| Ref. | Part Number | Qty. | Description |
|---|---|---|---|
| 1 | T0002-8707-01 | 1 | Base-Swivel |
| 2 | T0002-8704-01 | 1 | Plate-Base, Swivel |
| 3 | T0002-8710-01 | 1 | Plate-Mount, Wireless |
| 4 | T0002-8712-01 | 1 | Angle-Mount, Wireless |
| 5 | T0000-2623 | 1 | Washer-Poly |
| 6 | T0002-8685-01 | 1 | Mount-Controler |
| 7 | 115-1794 | 4 | Screw-HHF |
| 8 | 104-8300 | 7 | Nut-Flange, NI |
| 9 | 3234-47 | 2 | Screw-HHF |
| 10 | T0002-8729 | 1 | Magnet-Ceramic, Encased |

| Ref. | Part Number | Qty. | Description |
|---|---|---|---|
| 11 | 3256-22 | 1 | Washer-Flat |
| 12 | 321-1 | 1 | Screw-HH |
| 13 | 125-5962-03 | 1 | Sleeve-Half |
| 14 | 125-1200 | 1 | Remote ASM |
| 14:3 | 121-2818 | 1 | Pin-Lanyard |
| 14:4 | 119-6414 | 6 | Screw-PPH |
| 14:12 | 125-1225 | 1 | Backer-Gasket, HH (Large) |
| 14:13 | 125-1226 | 1 | Gasket-HH (Large) |
| 15 | 125-5960-03 | 1 | Sleeve-Half |
| 16 | 119-6819 | 1 | Decal-Wireless Control |

# Attachments and Accessories

## For 44954 MH-400EH2 Material Handler

| Product Name | Model/Part |
|---|---|
| Hopper Vibrator Kit, ProPass Top Dresser and MH-400 Material Delivery Unit | 44723 |
| MH-400 Conveyor/Swivel/Caddy | 44938 |
| Light Kit | 44940 |
| SH/EH Twin Spinner | 44944 |
| 2-Wheel to 4-Wheel Brake Conversion Kit | 44945 |

**Notes:**

**Notes:**

TORO®

Count on it.