FORM NO. 3319–314GB

TORO®

CAUTION NOTICE

Models 21040, 21042 & 21043

Rain Shield Reinstallation

The clear plastic Rain Shield can become detached from the mower due to rough handling during shipping. If the Rain Shield is not attached to the mower when the carton is opened, reinstall the Rain Shield onto the shroud as follows:

1. Reinstall the mounting tabs onto the Rain Shield mounting pins (Fig. 1).

2. Rotate the straight end of the spring and hold it up in the vertical position (Fig. 1).

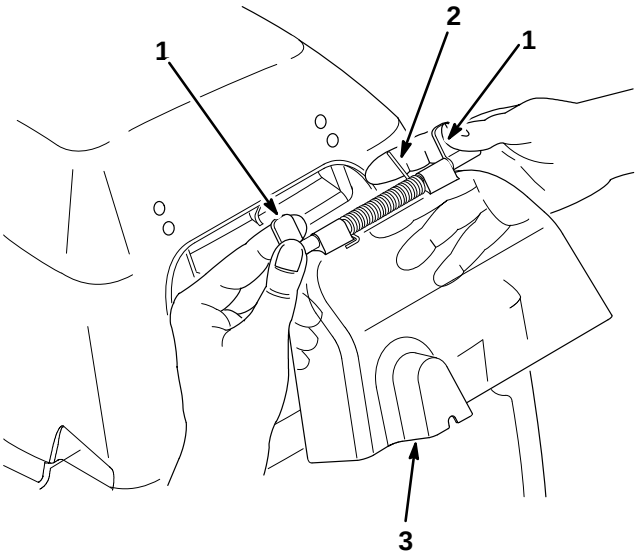

Figure 1

1. Mounting Tab
2. Straight End of Spring
3. Rain Shield

3. Snap the mounting tabs into the matching holes in the shroud (Fig. 2).

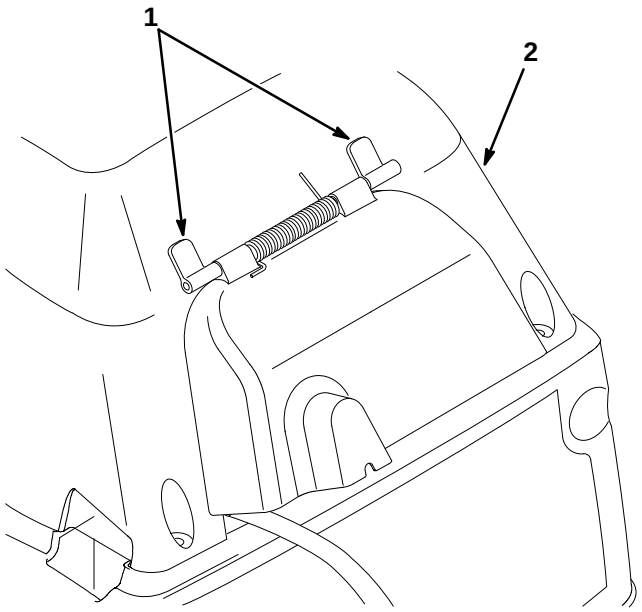

Figure 2

1. Mounting Tab
2. Shroud

Printed in USA

©The Toro Company – 1996
All Rights Reserved