FORM NO. 3319−773

TORO®

MODEL NO. 04493−71466

PARTS CATALOG

DETHATCHER KIT
For Greensmaster® 3200

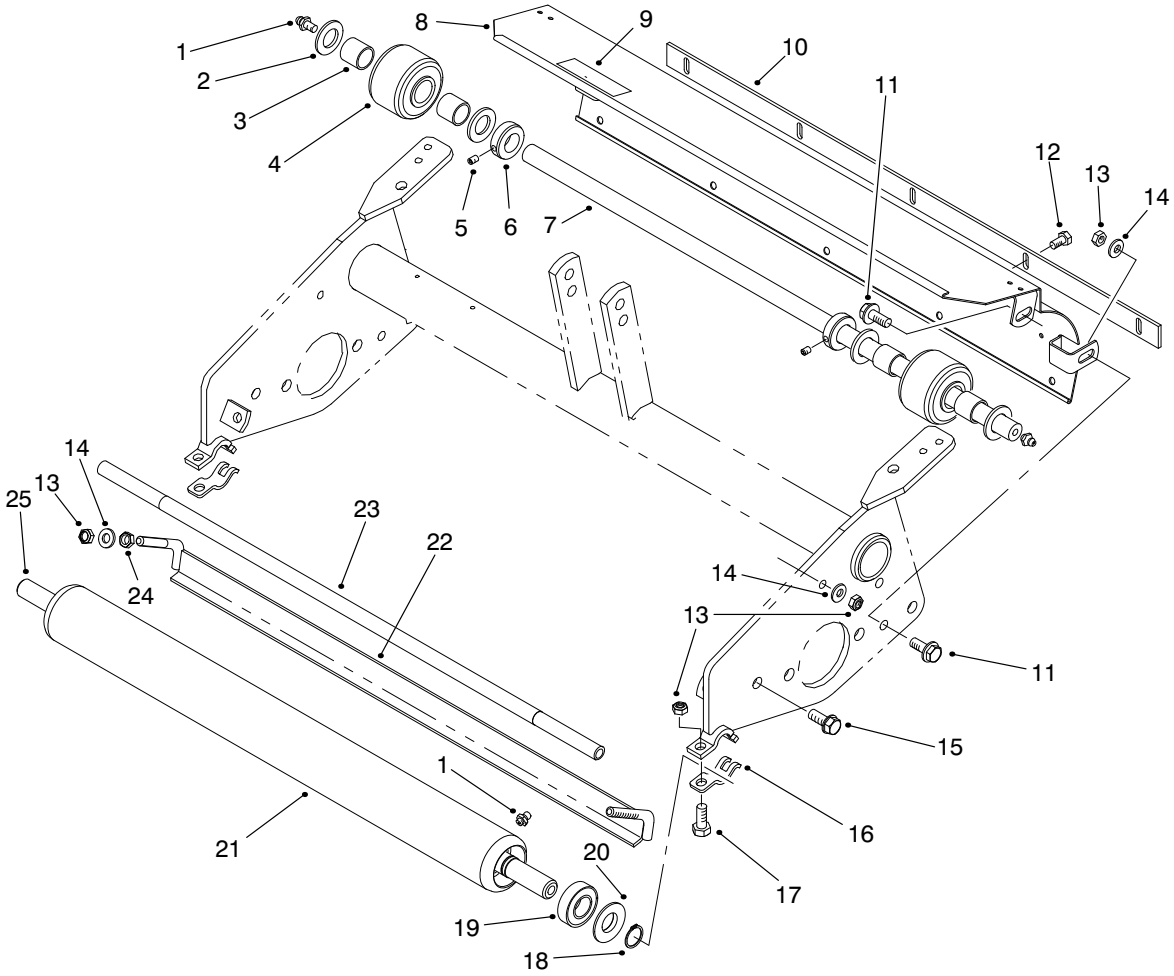

ROLLER ASSEMBLY

Ref. No.	Part No.	Description	No. Used
1	302−5	Fitting − Grease	4
2	257−11	Washer − Thrust	4
3	95−7497	Bushing − Wheel	4
4	94−9211	Asm−Wheel	2
5	3245−1	Screw − Set	2
6	94−9213	Collar − Shaft (Incl. Ref. #5)	2
7	94−9210	Shaft − Wheel, Rear	1
8	98−3551	Asm−Shield, Grass	1
9	67−7960	Decal − Danger, Reel	1
10	36−7260	Bar − Cutoff	1
11	33104−025	Screw − HHF	4
12	32144−73	Screw − HHWTF	5
13	33024−00	Nut − Lock	8
14	3256−74	Washer − Flat	6
15	33105−020	Screw − HHF	2
16	95−1637	Collar − Height−of−Cut	2
17	33114−016	Screw − HH	2
18	32151−12	Ring − Retaining	2
19	85−9970	Asm−Bearing	2
20	85−7190	Washer − Shield	2
21	95−5943	Asm−Rear Roller (Incl. Ref. #1, 18−20 & 25)	1
22	94−9226	Bracket − Scrapper	1
23	98−2196	Rod − Shield	1
24	33014−00	Nut − Hex.	2
25	95−5946	Shaft − Roller	1

©The TORO Company − 1997
All Rights Reserved

3319−773

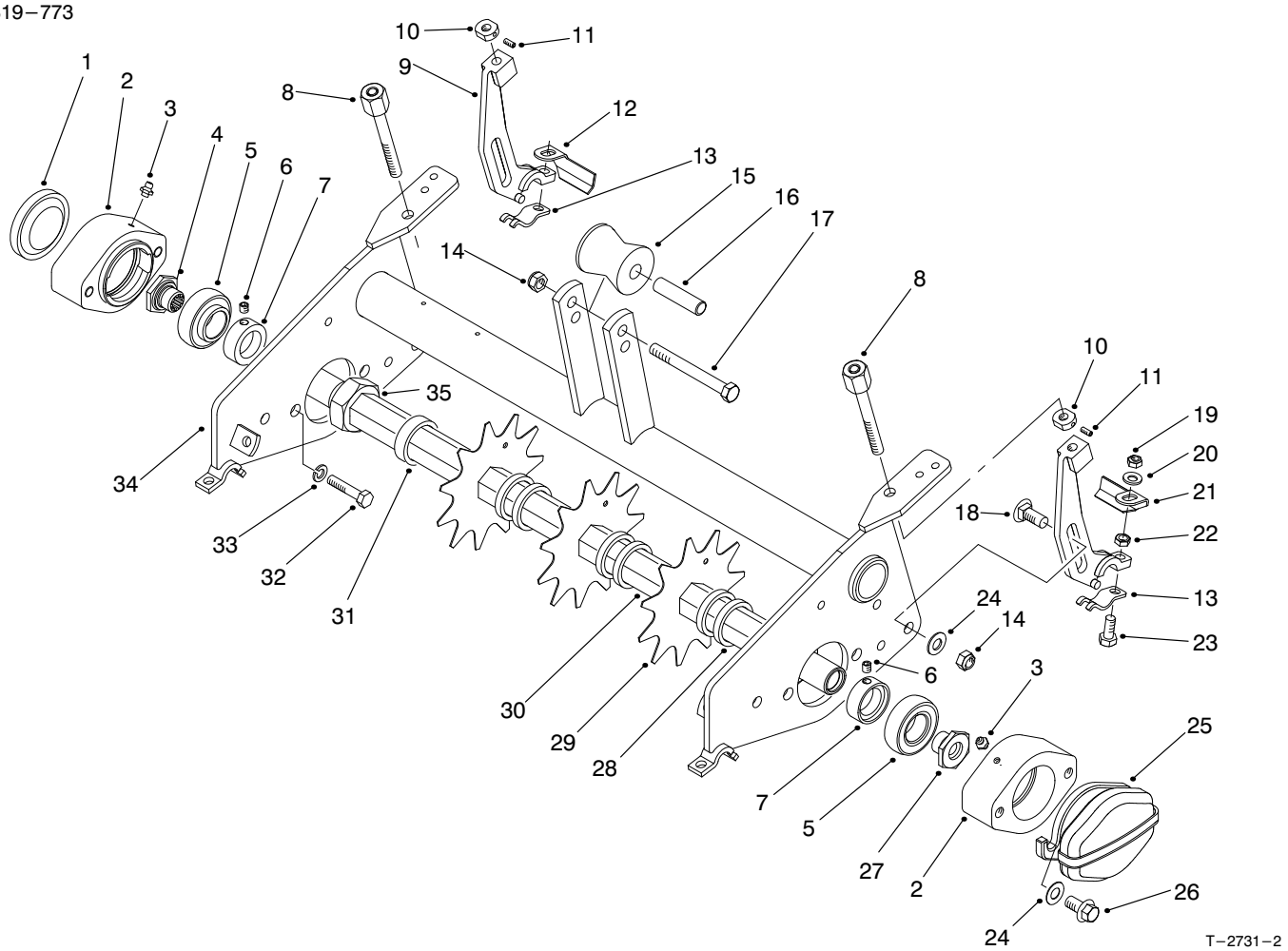

FRAME ASSEMBLY

Ref. No.	Part No.	Description	No. Used
1	2410−30	Cap − Plastic	1
2	95−7148	Housing − Bearing	2
3	302−5	Fitting − Grease	2
4	93−1394	Nut − Spline	1
5	251−337	Bearing − Ball	2
6	3245−35	Screw − Set	2
7	251−77	Collar − Lock	2
8	95−1633	Asm−Adjustment (Height−of−Cut)	2
9	95−1638	Bracket − Height−of−Cut Adjustment, Rear	2
10	95−1632	Nut − Lock	2
11	3245−42	Screw − Set	2
12	94−9219	Scraper − Roller, Right	1
13	95−1637	Collar − Height−of−Cut	2
14	33025−00	Nut − Lock	3
15	93−2463	Roller − Lift	1
16	93−2464	Spacer − Roller	1
17	33115−080	Screw − HH	1
18	33125−030	Screw − Carriage	2
19	33024−00	Nut − Lock	2
20	3256−74	Washer − Flat	2

Ref. No.	Part No.	Description	No. Used
21	94−9220	Scrapper − Roller, Left	1
22	33014−00	Nut− Hex.	2
23	33114−030	Screw − HH	2
24	3256−24	Washer − Flat	4
25	95−1642	Weight − Counter	1
26	93−2569	Screw − HHF	4
27	94−9214	Nut − Spline, LH	1
28	17−1600	Spacer	72
29	17−1590	Blade − Eleven Tooth	37
30	94−9202	Shaft − Dethatcher	1
31	17−1580	Spacer	2
32	33115−025	Screw − HH	4
33	48−9590	Washer − Lock	4
34	98−3587	Frame − Dethatcher	1
35	3220−18	Nut − Jam	2
*	94−9201	Asm−Shaft, Dethatcher (Incl. Ref. #28−31 & 35)	1
*	94−3405	Asm−Bearing (Incl. Ref. #5−7)	2
*	17−2290	Plate − Gauge .060	2
*	17−2300	Plate − Gauge .120	2
*	17−2310	Plate − Gauge .250	2

*Not Illustrated