Form No. 3404-853 Rev A

TORO®

Count on it.

Parts Catalog

Backfill Blade Kit

RT1160 or RT1200 Trencher

Model No. 25501

Model No. 25501E

Register at www.Toro.com.
Original Instructions (EN)

3404-853 A

Ordering Replacement Parts

To order replacement parts, please supply the part number, the quantity, and the description of each part desired.

Understanding Reference Numbers

Each identified part in an illustration has a reference number. The reference number for a part also appears in the parts list, along with other information about the part.

This catalog uses two special reference number formats, one to indicate parts in a service assembly and another to indicate the quantity of a given part in an illustration.

Service Assembly Reference Numbers

Parts in service assemblies have reference numbers in the form a:b. The a represents the reference number of the entire service assembly and the b represents a sequential number unique to each part within the service assembly.

For example, a wheel assembly might be identified by reference number 6, the tire by 6:1, the valve by 6:2, and the wheel by 6:3. When you order the assembly identified by reference number 6, you receive all parts identified by reference numbers 6:1,6:2, and 6:3. However, you may also order any part individually. Reference numbers of this type appear in illustration and in parts lists.

Reference Numbers Indicating Quantity

In an illustration, if a reference number indicates more than one part, the reference number has the form nX y. The n represents the quantity of the part, the X is the multiplication symbol, and the y represents the reference number.

For example, in an illustration, the reference number 2X 37 means that two of the parts identified by reference number 37 are indicated.

List of Abbreviations

AR: as required

ASM: assembly

BBC: blade brake control

BHTF: button head thread forming

CARR: carriage

CCW: counter clockwise

CW: clockwise

DEG: degrees

DPA: Dual Point Adjustment

ECM: electronic control module

EXT: external

FH: flat head

GA: gauge

HD: heavy-duty

HF: hex flange

HH: hex head

HHF: hex head flange

HHFTF: hex head flange thread forming

HJ: hex jam

HLH: hex lag head

HOC: height-of-cut

HP: high pressure

HSBH: hex socket button head

HSFH: hex socket flat head

HSH: hex socket head

HWH: hex washer head

HWHTF: hex washer head thread forming

HYD: hydraulic

LH: left hand

LP: low pressure

LPG: Liquefied Petroleum Gas

NI: nylon insert

NPTF: national pipe thread fine

PFH: phillips flat head

PPH: phillips pan head

PPHTF: phillips pan head thread forming

PRH: phillips round head

PTH: phillips truss head

PTO: power-take-off

RH: right hand

ROPS: roll-over protection system

RRB: rear roller brush

SFH: slotted fillister head

SHH: slotted hex head

SHWH: slotted hex washer head

SPH: slotted pan head

SQH: square head

SRH: slotted round head

STD: standard

TAP: self tapping

TTH: torx truss head

Contents

Backfill Blade and Mounting Assembly 4
Hydraulic Cylinder Assembly No. 127-1797 6
Hydraulic Cylinder Assembly No. 127-1798 8
Hydraulic Cylinder Assembly No. 127-1799 10
Hydraulic Hose Assembly 12

© 2016—The Toro® Company
8111 Lyndale Avenue South
Bloomington, MN 55420

Contact us at www.Toro.com.
Printed in the USA.
All Rights Reserved

Backfill Blade and Mounting Assembly

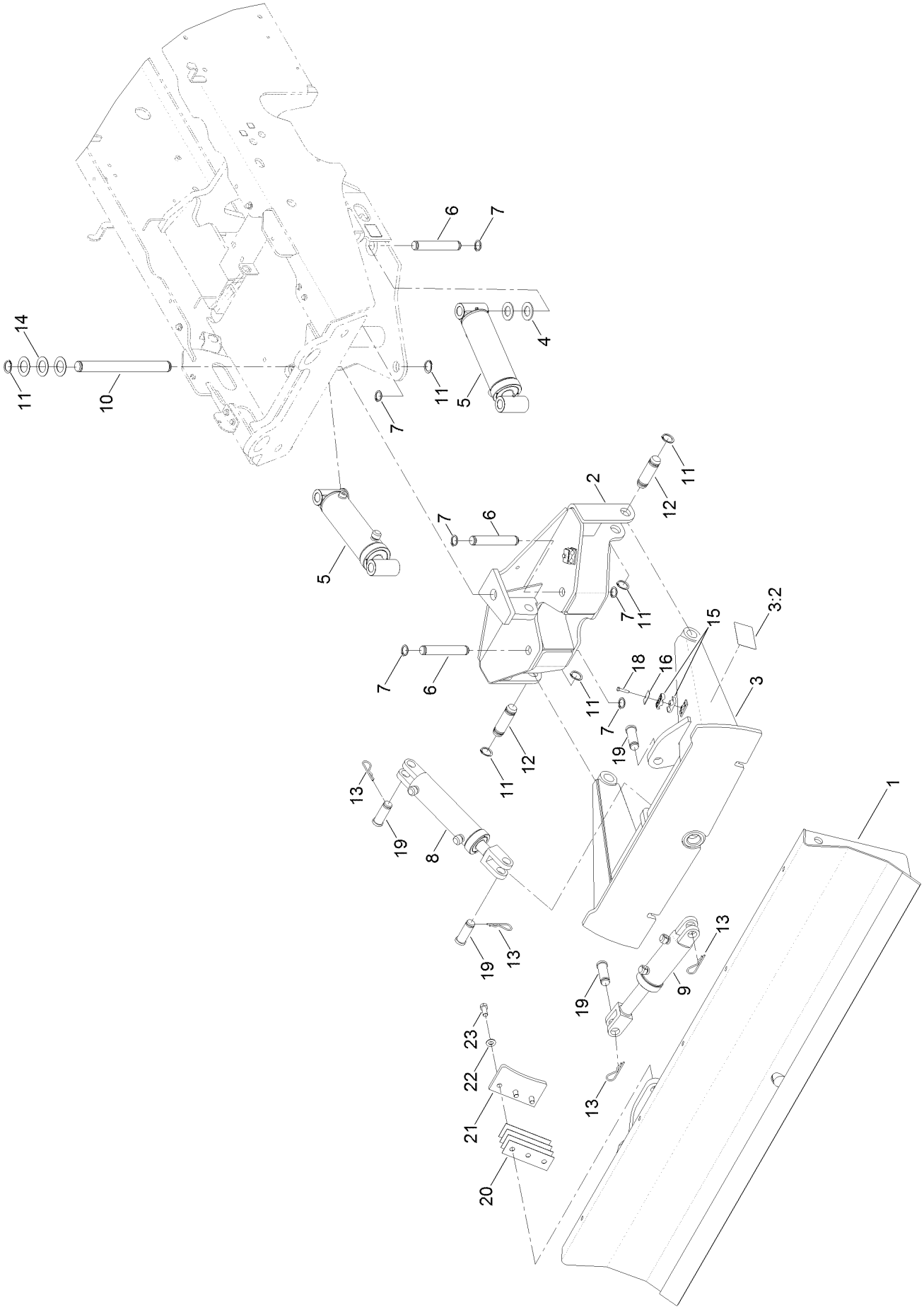

Backfill Blade and Mounting Assembly (continued)

Ref.	Part Number	Qty.	Description
1	131-0487-03	1	Blade-Backfill
2	AU115400-03	1	Pivot-Blade, Backfill
3	131-0437	1	Backfill Arm ASM
3:2	130-7541	2	Decal-Danger
4	AU495-81209	4	Washer-Flat
5	127-1797	2	HYD Cylinder ASM
6	AUH432880	4	Pin-Angle, Cylinder
7	32151-77	8	Ring-Retaining, External
8	127-1798	1	HYD Cylinder ASM
9	127-1799	1	HYD Cylinder ASM
10	AUH432906	1	Pin-Blade
11	AUD25279	6	Ring
12	AUH432898	2	Pin-Blade
13	AU1978738C1	4	Pin-Cotter, Quick Attach
14	AUH117606	3	Washer
15	56-7971	4	Clamp-Tube
16	69-9760	2	Coverplate
18	322-7	2	Screw-HH
19	AUN14001	4	Pin-Clevis
20	AUH438278-03	8	Shim-Retainer
21	AUH438273-03	2	Retainer-Blade
22	3256-27	6	Washer-Flat
23	327-4	6	Screw-HH

Hydraulic Cylinder Assembly No. 127-1797

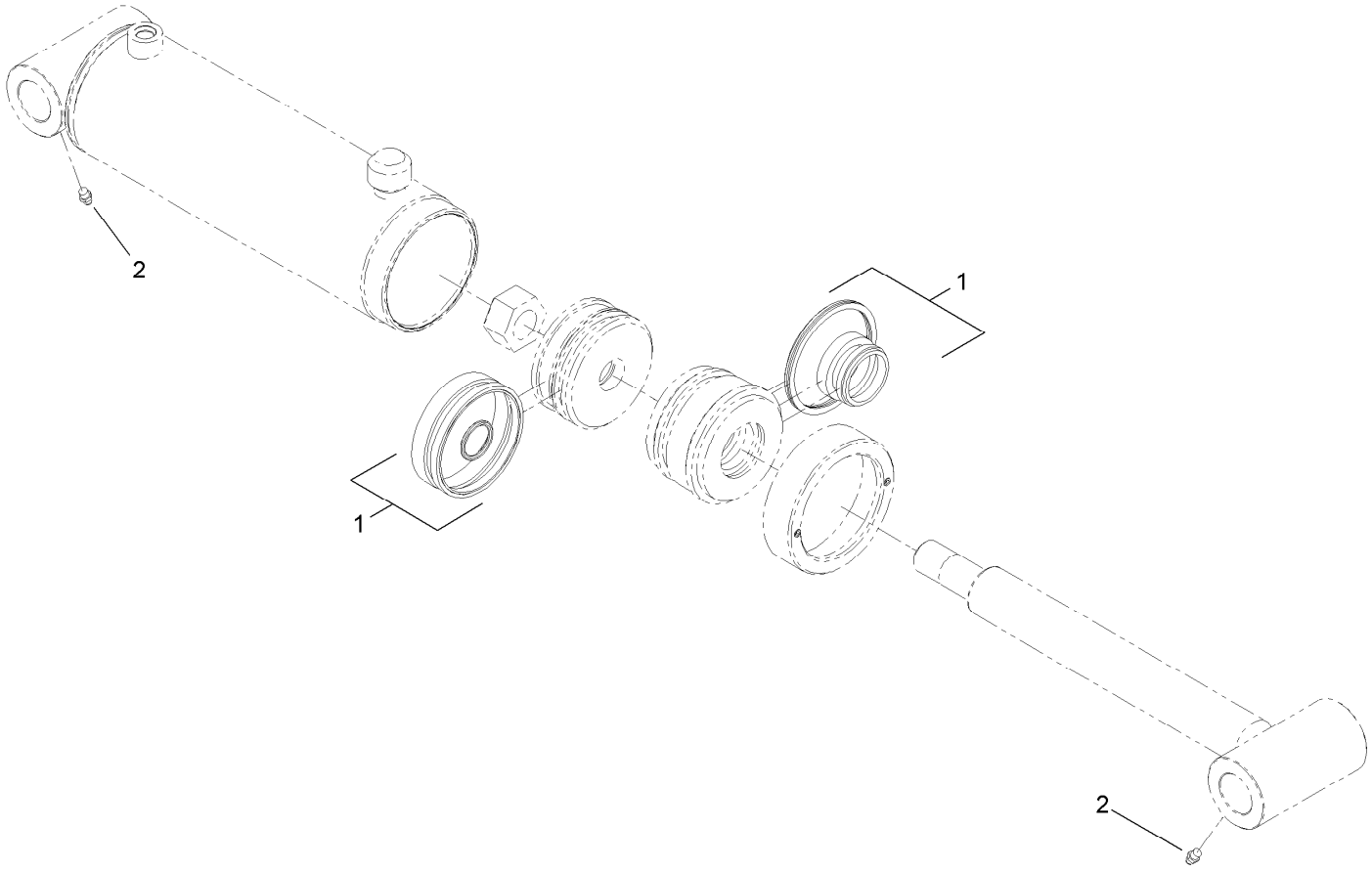

Hydraulic Cylinder Assembly No. 127-1797 (continued)

Ref.	*Part Number*	*Qty.*	*Description*
1	131-3822	1	Seal Kit
2	302-2	2	Fitting-Grease

Hydraulic Cylinder Assembly No. 127-1798

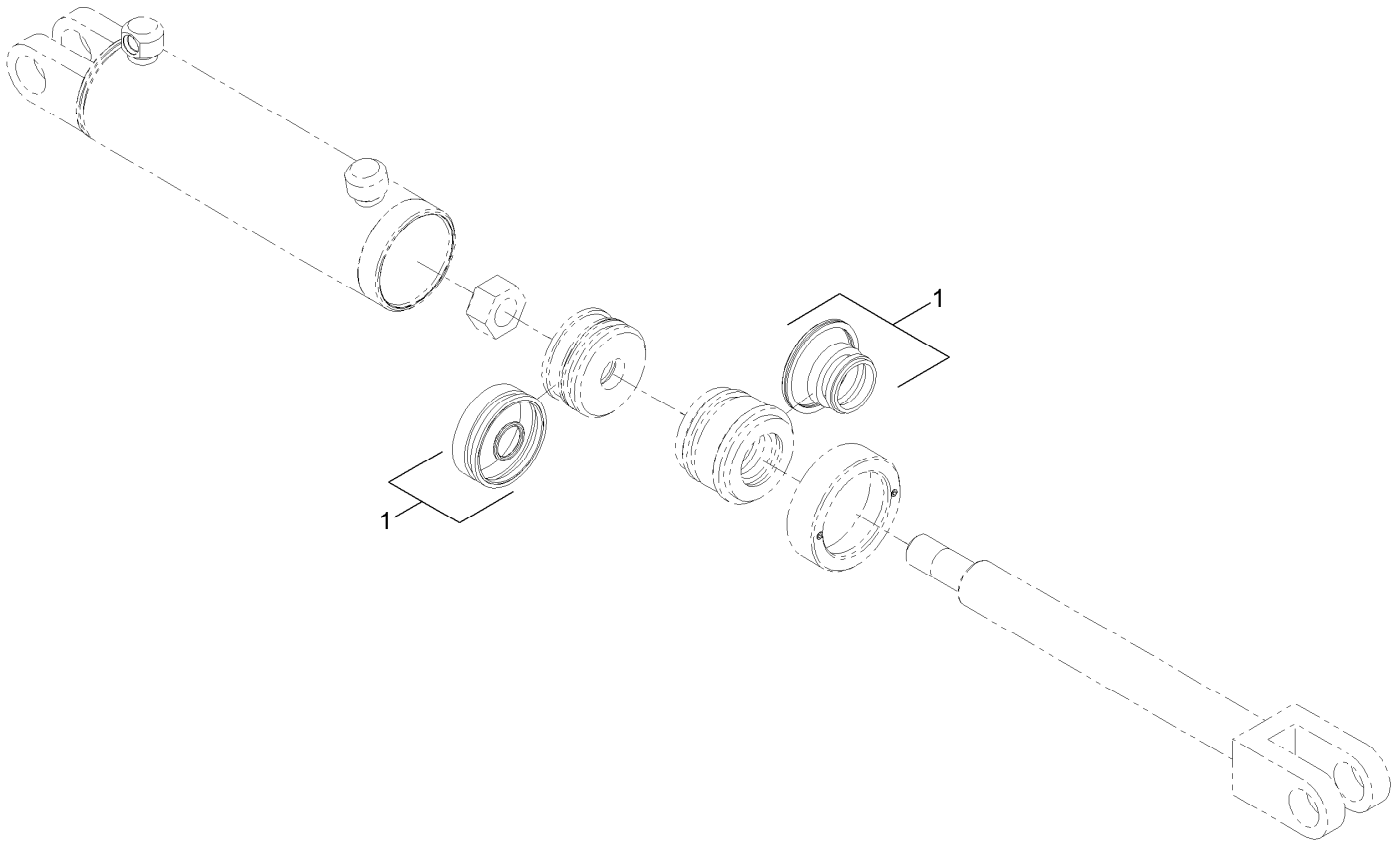

Hydraulic Cylinder Assembly No. 127-1798 (continued)

Ref.	*Part Number*	*Qty.*	*Description*
1	127-1854	1	Seal Kit

Hydraulic Cylinder Assembly No. 127-1799

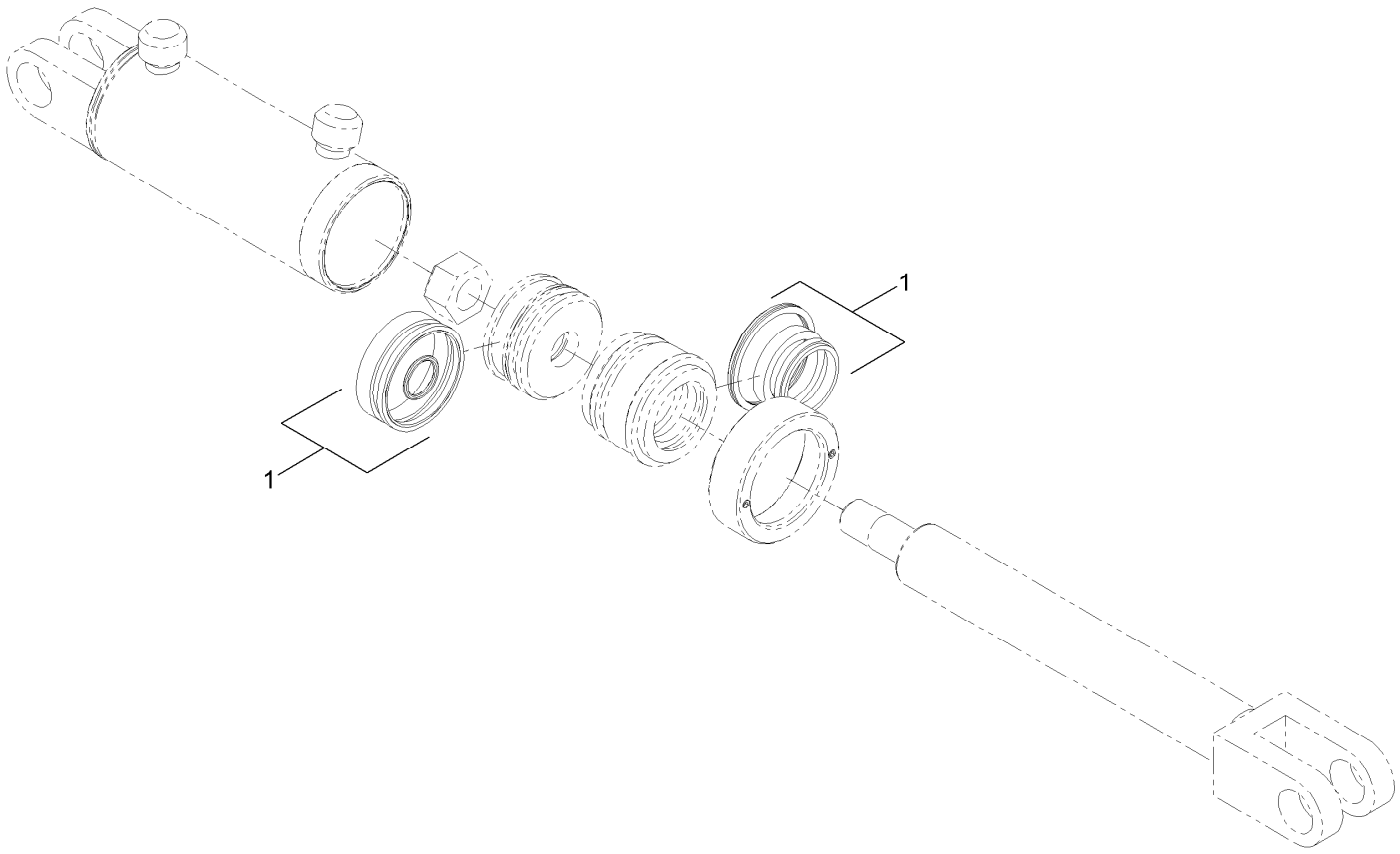

Hydraulic Cylinder Assembly No. 127-1799 (continued)

Ref.	*Part Number*	*Qty.*	*Description*
1	127-1853	1	Seal Kit

Hydraulic Hose Assembly

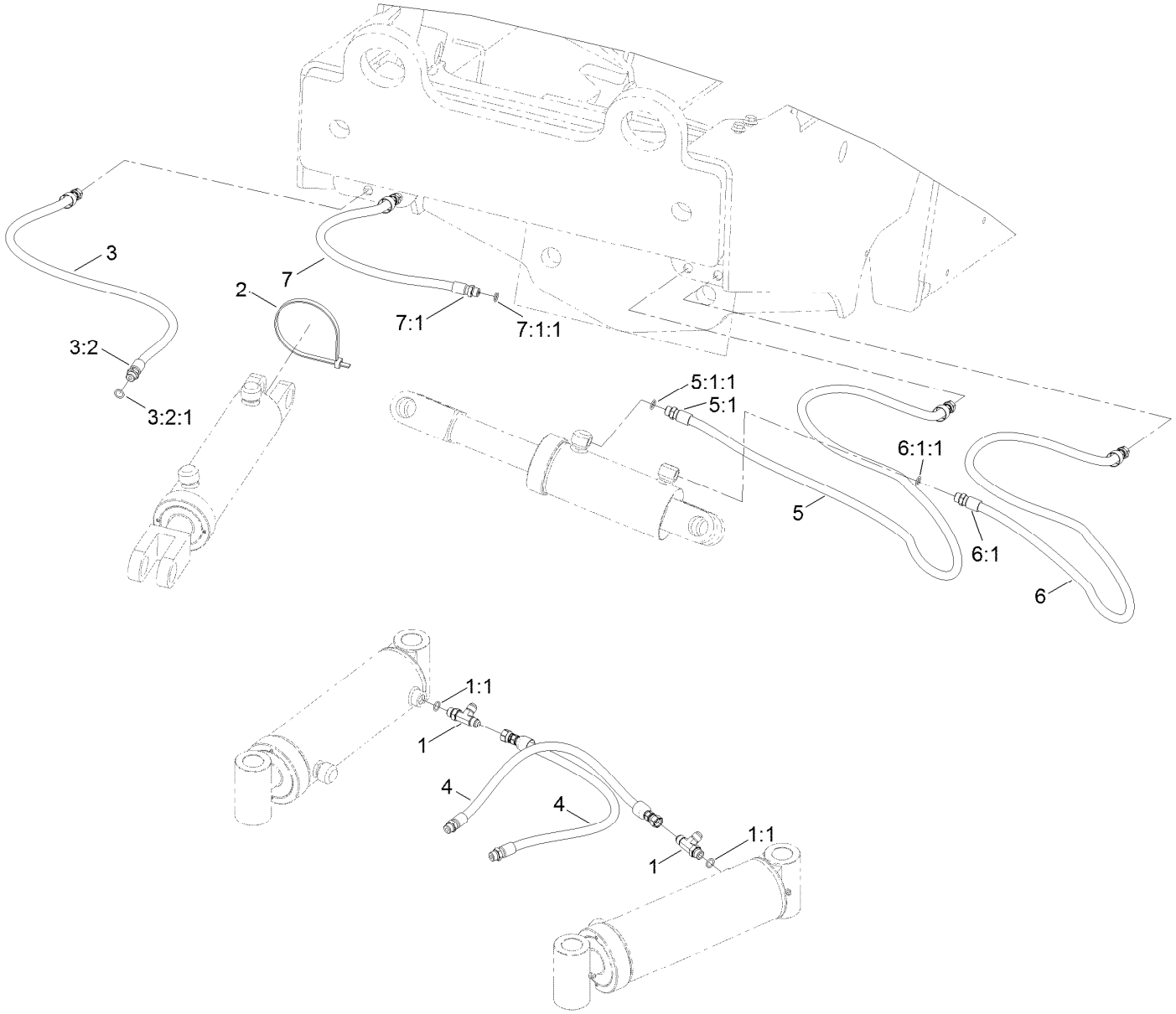

Hydraulic Hose Assembly (continued)

Ref.	Part Number	Qty.	Description
1	AU218-5243	2	Fitting-Tee
1:1	237-42	1	O-Ring
2	3334-945	1	Tie-Cable
3	127-1815	1	HYD Hose ASM, HP
3:2		1	Fitting-Straight, Rigid ●
3:2:1	237-42	1	O-Ring
4	127-1795	2	HYD Hose ASM, HP
5	127-1818	1	HYD Hose ASM, HP
5:1		1	Fitting-Straight, Rigid ●
5:1:1	237-42	1	O-Ring
6	127-1817	1	HYD Hose ASM, HP
6:1		1	Fitting-Straight, Rigid ●
6:1:1	237-42	1	O-Ring
7	131-0425	1	HYD Hose ASM, HP
7:1		1	Fitting-Straight, Rigid ●
7:1:1	237-42	1	O-Ring

● Not serviced separately

Notes:

Notes:



Count on it.