FORM NO. 3319−774 Rev. A

TORO®

MODEL NO. 04493−80001 & UP

OPERATOR'S MANUAL

DETHATCHER KIT

For Greensmaster® 3000 Series

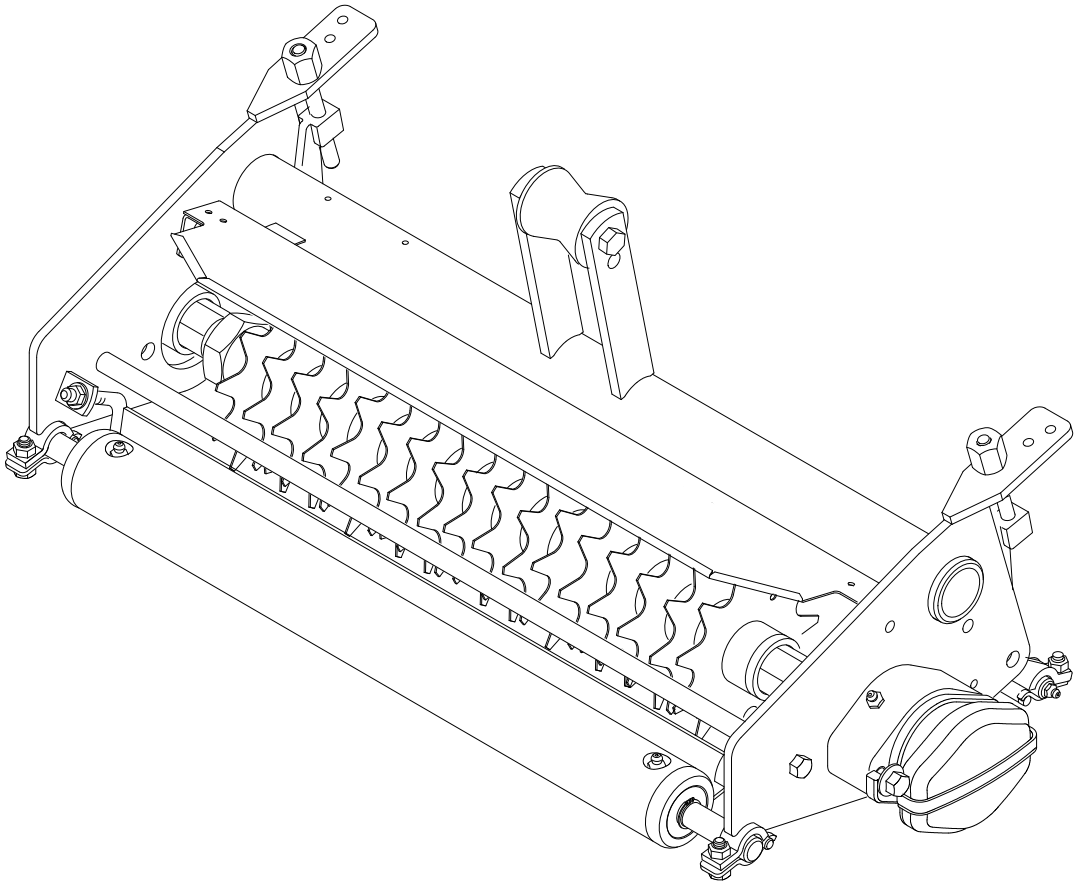

© The TORO Company − 1997, Rev. 1998

TABLE OF CONTENTS

	Page No.
SPECIFICATIONS	2
ADJUSTING DETHATCHING UNIT	2
Adjusting Reel Blades for Positive Setting	2
Adjusting Reel Blades for Negative Setting	3
Adjusting Grass Shield	3
Adjusting Front Roller Scraper	3
Adjusting Rear Wheel Scrapers	4
Installing Dethatching Unit	4
OPERATION	5
Training Period	5
Operating Tips	5
Adjust Carrier Frame Rollers	5
Adjust Reel Circuit Relief Valve	5
Optional Blade Configurations	5
MAINTENANCE	6
Lubrication	6
Removing Reel	6
Removing Blades From Shaft	6
Installing Blades	7
Reversing Dull Blades	7
Assemble Reel To Frame	8

SPECIFICATIONS

Reel Construction: Blades and spacers bolted to hex shaft.

Height of Dethatching Range: 5/8" below ground level to 1/4" above ground level.

Reel Diameter: 5 in.

Power: Hydraulic motor splined to reel shaft.

Reel Bearings: Self aligning, roller ball type with cast housing and eccentric collar lock with setscrew.

Roller Adjustment:
Front Roller−Fixed
Rear Wheels −screw adjustable with bolt clamp lock.

Note: Rear wheels and shaft can be replaced with a Front Roller, Part No. 95−5943. (Roller Scraper, Part No. 95−1600).

ADJUSTING DETHATCHING UNIT

Important: Read this Operator's Manual thoroughly before operating the dethatching unit. Failure to do so may result in damage to the dethatching reel.

Note: The dethatching unit is shipped completely assembled. The (2) capscrews and washers shipped loose with each dethatching unit are used to mount the reel drive motor to the dethatching unit. Retain these fasteners for later installation.

ADJUSTING REEL BLADES FOR POSITIVE SETTING (Above ground) (Fig. 1)

Note: Rear height of cut brackets are mounted to rear frame assembly.

1. Place dethatcher unit on a level surface.

2. Loosen (2) locknuts on carriage bolts securing rear wheel brackets to dethatcher frame (Fig. 1).

3. Place a gauge bar, which has the desired height of blade above ground, under full length of dethatcher reel blades.

4. Turn the adjusting capscrew on each end of dethatcher unit so rear wheel brackets raise or lower. Both front roller and rear wheels must be in contact with flat surface and reel blades must rest on gauge bar.

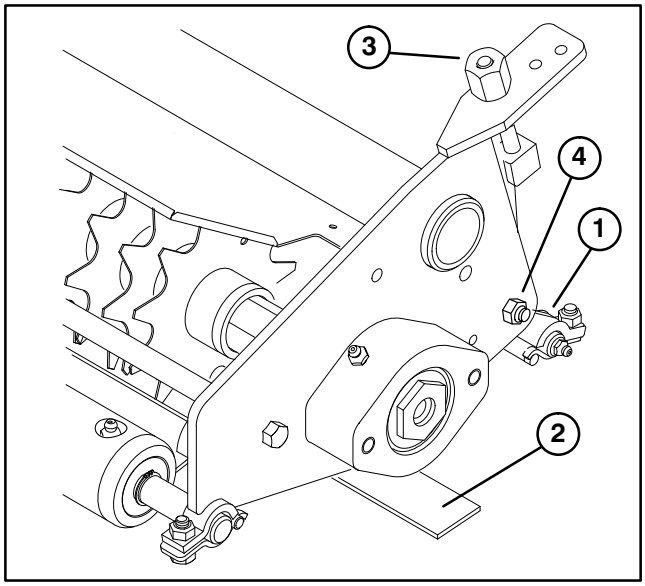

Figure 1
1. Rear wheel brackets
2. Gauge bar
3. Adjusting capscrew
4. Locknut

5. Retighten locknuts on (2) carriage bolts.

ADJUSTING DETHATCHING UNIT

ADJUSTING REEL BLADES FOR NEGATIVE SETTING (Below ground) (Fig. 2)

Note: Maximum negative setting is 5/8" deep blade penetration.

1. Place dethatcher unit on a level surface.

2. Loosen the (2) locknuts on carriage bolts securing rear wheel brackets to dethatcher frame.

3. Place (2) gauge bars, which have the desired depth of blade penetration below ground, under the front roller and rear wheels of dethatcher unit.

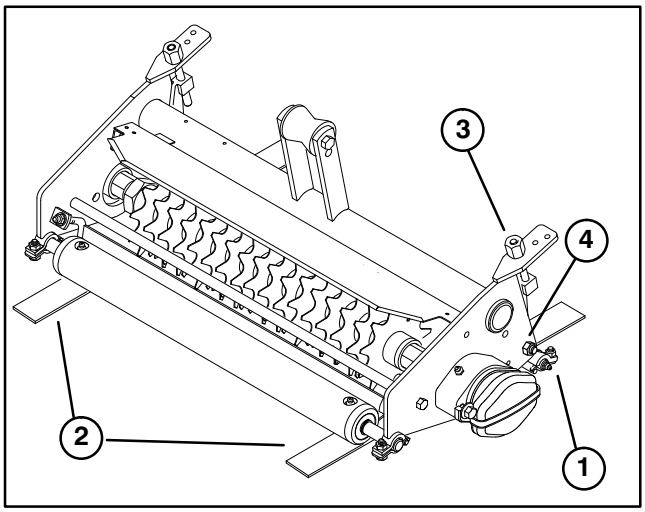

Figure 2
1. Rear wheel brackets
2. Gauge bars
3. Adjusting capscrew
4. Locknut

4. Turn the adjusting capscrews until dethatcher reel blades come in contact with level surface on both ends.

5. Retighten locknuts on the (2) carriage bolts securing rear wheel brackets to dethatcher frame.

ADJUSTING GRASS SHIELD (Fig. 3)

1. Loosen (4) capscrews retaining front grass shield.

2. Adjust grass shield to desired setting and tighten (4) capscrews.

3. Rotate dethatcher blades to insure blades do not contact or interfere with grass shield.

Note: As dethatcher blades wear, the diameter of the reel will decrease and setting will change. Check adjustment periodically to insure desired setting is achieved.

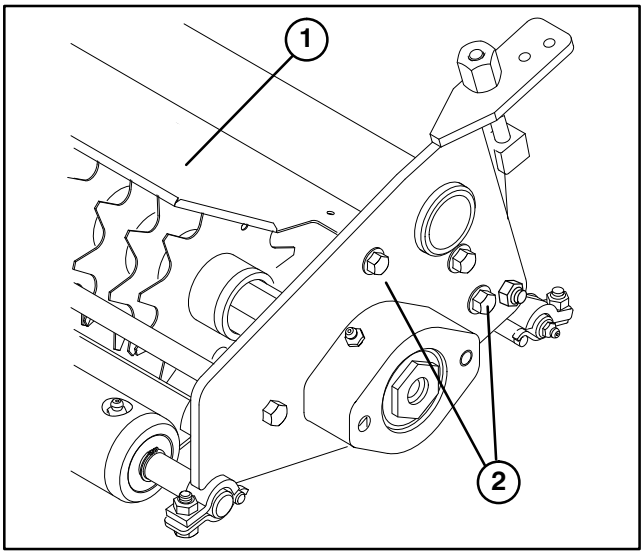

Figure 3
1. Grass shield
2. Grass shield screws

Note: Bar on rear of shield is adjustable to decrease ground clearance. Make sure bar is repositioned if dethatcher blades are replaced.

ADJUSTING FRONT ROLLER SCRAPER (Fig. 4)

1. Loosen locknut and jam nut securing each end of front roller scraper to brackets.

2. Adjust roller scraper until there is .030" – .060" clearance between scraper and roller.

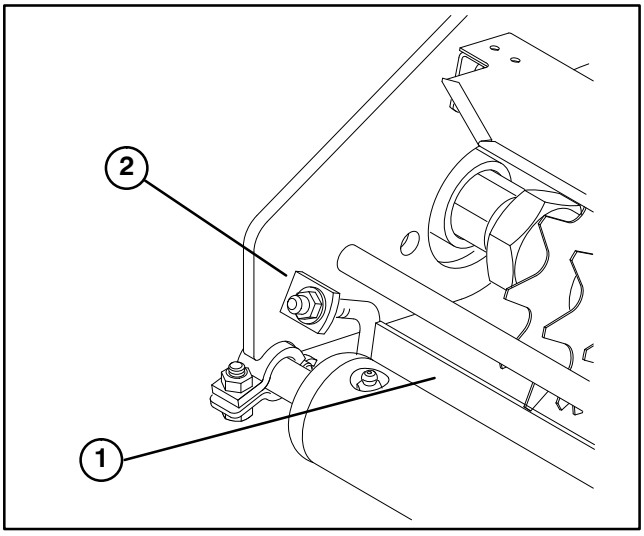

Figure 4
1. Front roller scraper
2. Roller bracket

3. Tighten locknuts and jamnuts securing roller scraper to brackets.

ADJUSTING DETHATCHING UNIT

ADJUSTING REAR WHEEL SCRAPERS (Fig. 5)

1. Loosen jam nut and locknut securing each rear wheel scraper to bracket.

2. Adjust each scraper until there is .030" – .060" clearance between front edge of scraper and wheel.

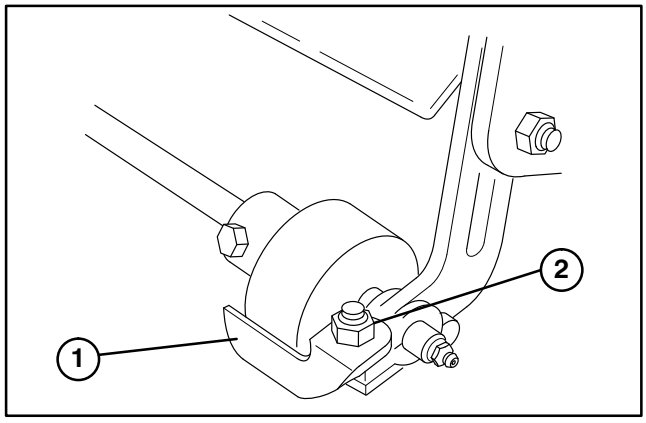

Figure 5

1. Rear wheel scraper
2. Jamnuts

3. Tighten locknuts and jamnuts securing scrapers to brackets.

Note: Scraper adjustment can be changed to meet turf conditions.

INSTALLING DETHATCHER UNITS (Fig. 6–7)

Important: If dethatcher is set at a negative setting, care must be taken to prevent damage to reel blades, due to contact with concrete floors or a paved surfaces.

Note: When mounting Dethatcher Units on a Greensmaster 3200 or 3200–D traction unit, Pull Link Kit, Toro Part No. 94–9630 must be installed to each unit. Pull link kits are not required when installing Dethatcher Units on any other Greensmaster models.

1. Park the machine on a level surface, lower lift arms, stop engine and set parking brake.

2. Slide dethatcher unit under traction unit pull frame while hooking lift roller onto lift arm.

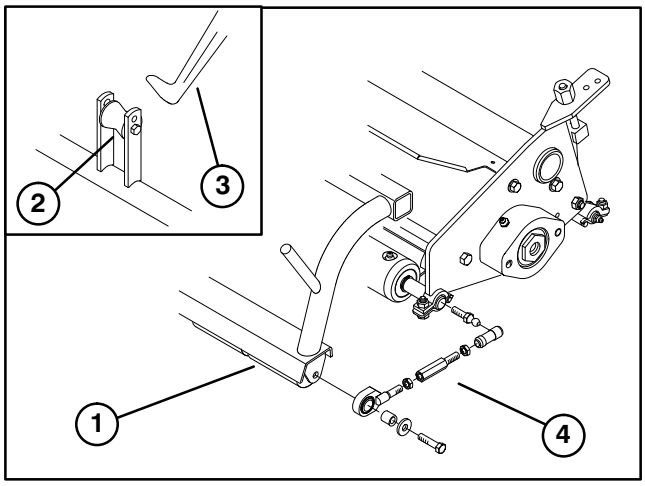

Figure 6

1. Pull frame
2. Lift roller
3. Lift arm
4. Pull link kit

Note: When mounting Dethatcher Unit in right front position on traction unit, remove counter weight from left end of unit and mount on right end. Motor to be connected to left end.

3. Install Pull Link Kit, Toro Part No. 94–9630 per instructions supplied with kit.

4. Assemble the mounting capscrews and washers for the reel drive motor to each Dethatcher Units. Leave approximately 1/2 in. of threads exposed on each mounting capscrew (Fig. 7).

5. Coat the spline shaft of the motor with clean grease and install the motor by rotating the motor clockwise so the motor flanges clear the capscrews. Rotate the motor counterclockwise until the flanges encircle the capscrews and tighten the capscrews. Ensure the washers are against the capscrew heads.

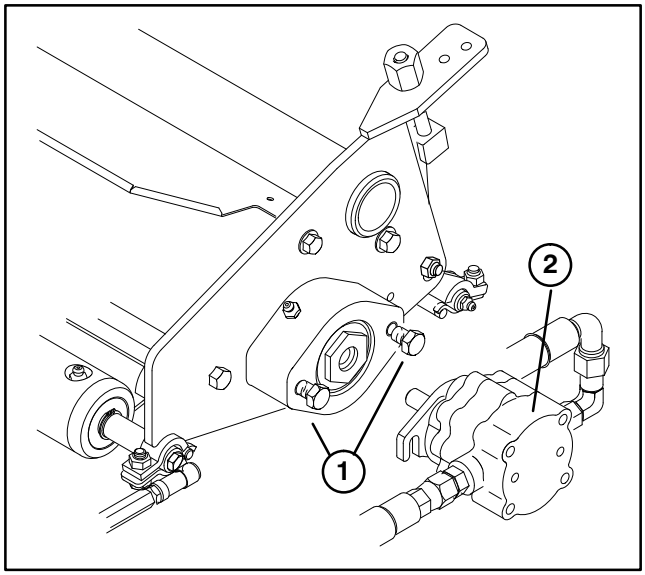

Figure 7

1. Capscrews & washers
2. Drive motor

OPERATION

TRAINING PERIOD

Before operating the dethatching units on a green, evaluate the performance of the dethatcher at the desired setting. Operate in a clear, unused area to determine if the desired results will be achieved. Adjust the dethatcher if a change is desired.

OPERATING TIPS

1. Operate the traction unit at full throttle varying ground speed to meet dethatching loads.

2. Maximum negative setting on the dethatcher blades is 5/8" deep penetration.

3. Power requirements to operate the dethatcher units will vary with turf and soil conditions. Travel speed may need to be reduced in some conditions.

Note: When dethatching units are mounted on Greensmaster 3200 or 3200−D Traction Units and are operated under heavy loads, an adjustment to the carrier frame and reel circuit relief valve may be required. Proceed as follows:

ADJUST CARRIER FRAME ROLLERS

(Fig. 8)

1. Position traction unit on a level surface and lower cutting unit carrier frames to the floor.

2. Loosen jam nut on carrier frame stop screw and rotate screw to lower carrier frame rollers to the ground. Tighten jam nut after adjustment is attained.

3. When cutting units are reinstalled, readjust carrier frame stop screw so there is 3/8" ± 1/8" clearance between carrier frame rollers and floor.

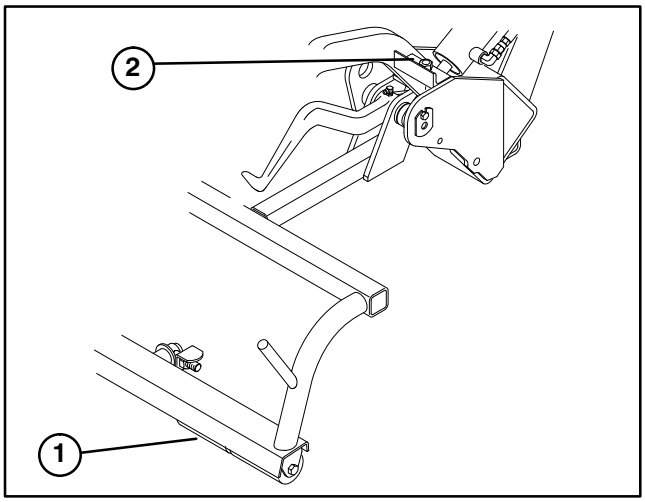

Figure 8
1. Carrier frame roller
2. Stop screw

ADJUST REEL CIRCUIT RELIEF VALVE

(Fig. 9)

1. On rear side of manifold, remove cap from end of relief cartridge (Fig. 9).

2. With allen wrench, rotate internal hex 1 turn clockwise to increase system relief pressure to 2800 psi..

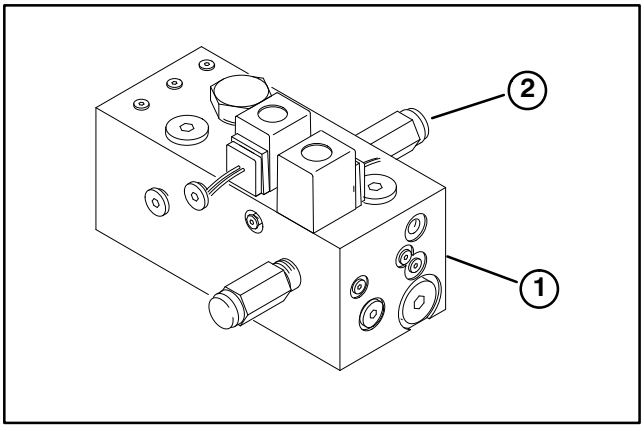

Figure 9
1. Manifold
2. Relief cartridge

3. Install cap to end of relief cartridge.

4. When cutting units are reinstalled, relief valve setting can remain at 2800 psi.

OPTIONAL BLADE CONFIGURATIONS

The dethatching unit is shipped from the factory with 1/2" spacing between blades. Using different combinations of 1/4" thick spacers (Toro Part No. 17−1600) and 3/4" thick spacers (Toro Part No. 82−6600) blade spacings of 1/2", 3/4", 1" or 1−1/4" can be attained.

MAINTENANCE

LUBRICATION (Fig. 10)

There are (6) grease fittings on each dethatching unit, which must be lubricated after every 15 hours of operation. Lubricate using a #2 multipurpose lithium base grease. A hand operated grease gun is recommended for best results.

1. Wipe each grease fitting with a clean rag.

2. Apply grease to reel bearings, front roller bearings and rear wheel bearings until pressure is felt.

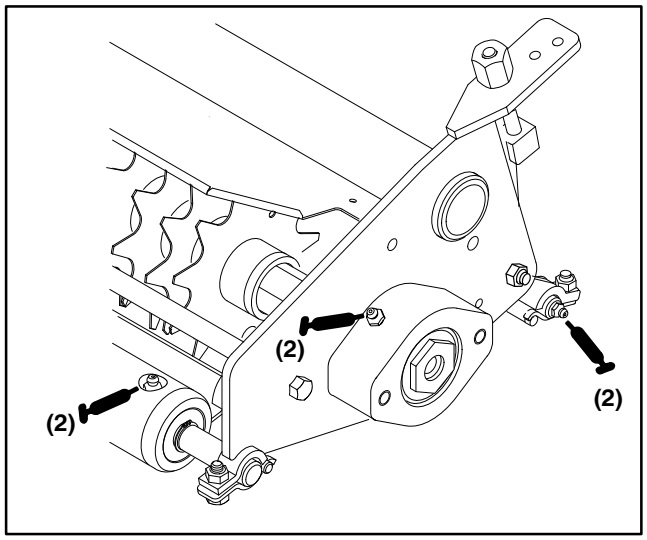

Figure 10

IMPORTANT: Do not apply too much pressure or grease seals will be permanently damaged.

3. Wipe excess grease away.

REMOVING REEL (Fig. 11–12)

1. Remove (2) capscrews and washers securing counterweight to end of dethatcher unit. Remove counterweight.

2. Remove (2) capscrews and washers securing reel motor to other end of dethatcher unit. Remove reel motor.

3. Remove (2) capscrews and lockwashers securing the reel bearing housings to each end of dethatcher unit (Fig. 11).

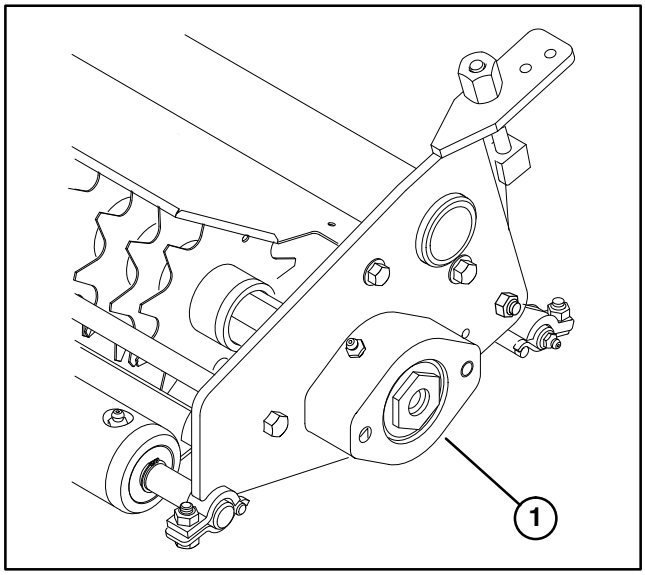

Figure 11

1. Bearing housing

4. Remove setscrews from locking collars on reel bearings (Fig. 12).

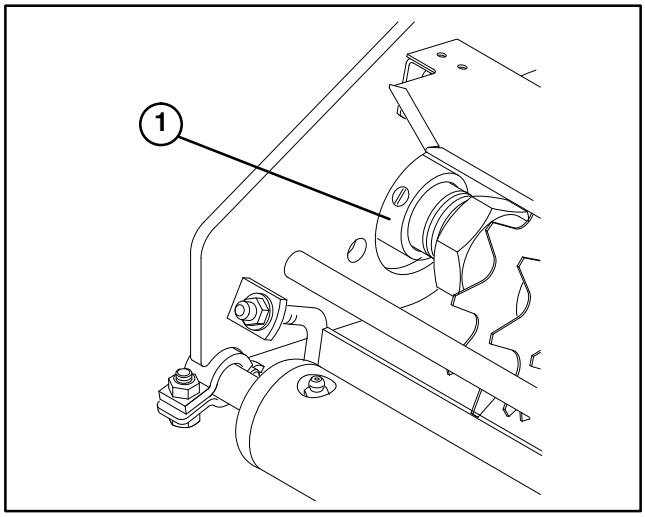

Figure 12

1. locking collar

5. With a drive pin and hammer, loosen the locking collars by driving the locking collar in direction opposite to normal rotation.

6. Slide bearing housings and locking collars off dethatcher reel shaft.

7. Carefully pull reel assembly out of dethatcher frame.

REMOVING BLADES FROM SHAFT (Fig. 13)

1. Remove one of the 1–1/8 in. nuts from shaft.

2. Disassemble spacers and dethatching blades from shaft.

IMPORTANT: When disassembling blades from hex shaft, pay close attention to the position of the index holes in the blades. This is very important for the re–assembly of the blades.

MAINTENANCE

CAUTION

Use caution when removing blades from shaft as they are extremely sharp and may have burrs that will cut your hands.

3. After blades and spacers are removed, clean and lubricate hex shaft with a light coating of grease to simplify assembly.

IMPORTANT: The two 1/2" spacers must be assembled on each end of shaft. Do not invert individual dethatching reel blades. The order of disassembly is extremely important. Do not invert dethatching reel blades when disassembling or reverse the order when assembling. Note the thatcher blades index hole. The index hole is provided for assembly in order to obtain the PROPER HELIX FOR THE DETHATCHING REEL.

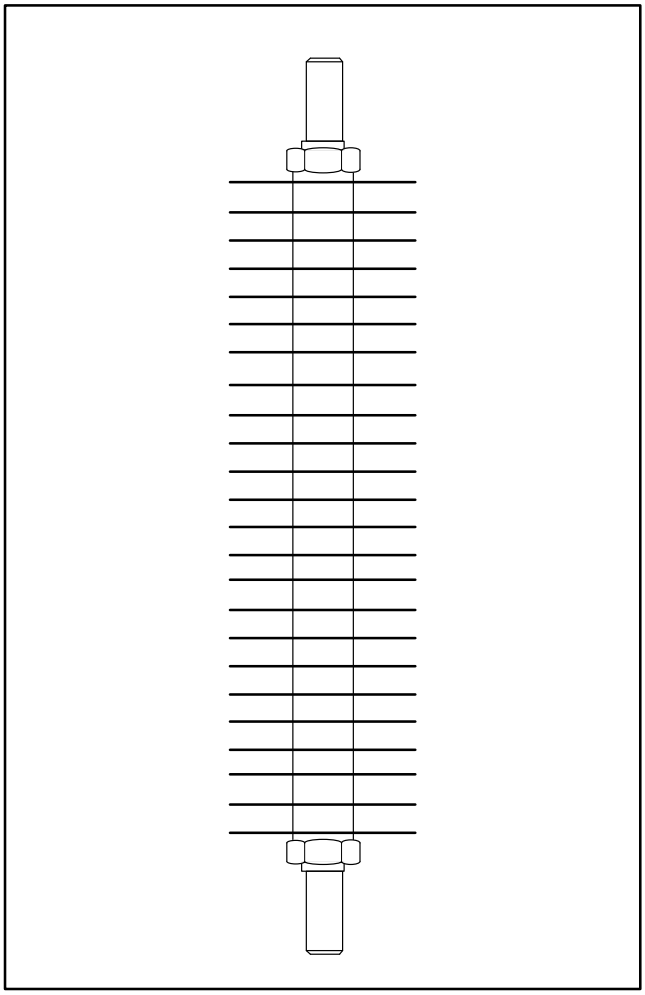

Figure 13

1. 1−1/8" nut

INSTALLING DETHATCHER BLADES (Fig. 14)

Use the following procedure to assure the proper helix is attained when installing the dethatcher blades.

1. First, assemble one 1/2 in. spacer on reel shaft, then assemble a reel dethatcher blade.

2. Next, assemble the 1/4 in. spacers.

3. Do not invert individual dethatcher reel blades when reassembling on reel shaft. If the blades are inverted, the blades that are in use, (rounded) will be mixed with the sharp ends of the blades which were not in use. This will cause unsatisfactory performance of the dethatcher unit. Attention should always be taken when disassembling dethatching blades from reel.

4. Install the next blade counter−clockwise so the index reference hole is not aligned with the first blade hole by one hex of the shaft (Fig. 14). Continue to install spacers and blades in this manner until the full complement of blades have been installed. When properly assembled, the blades will be staggered in such a manner to give a helix appearance.

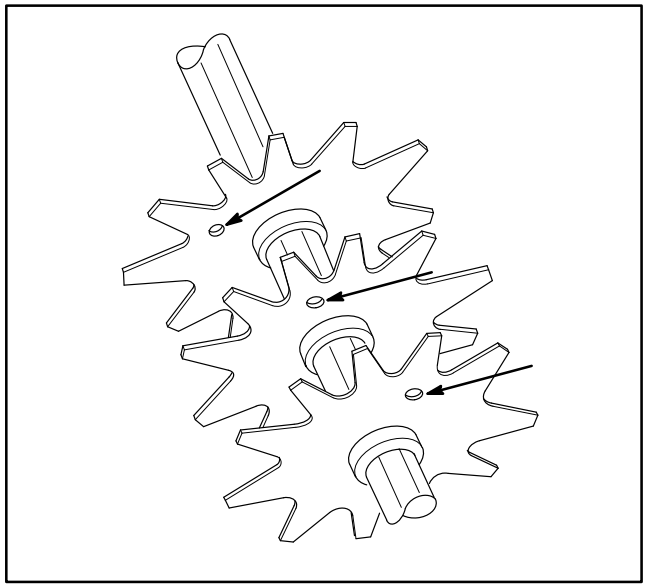

Figure 14

5. After assembly of the spacers and blades, apply Blue Loctite #242 to the 1−1/8 in. nut and tighten to 80 −100 ft−lb.

6. Check positive or negative reel setting and readjust, if necessary.

Note; If spline nuts were removed from ends of Dethatching reel, apply Blue Loctite #242 to nut threads before re−installing. Torque nuts to 40−60 ft−lb (Left hand nut is a left hand thread) .

REVERSING DULL BLADES

When dethatcher blades become dull, grinding is not required. The dethatcher blades can be disassembled from the reel, reversed 180° and reassembled.

Grinding of the blades is only required when both sides of the reel have become dull or rounded.

Reassemble dethatcher blades by inverting all of them 180° and reassembling them onto the hex shaft. This will be evident by all the sharp edges of the blades in the direction of rotation.

Check positive or negative reel setting and readjust, if necessary.

IMPORTANT: Make sure the sharp edge of the blades are in the direction of the rotation of the dethatching unit.

ASSEMBLE REEL TO FRAME

1. Slide a locking collar onto each end of reel shaft. Larger I.D. of collar to be facing outward.

2. Insert reel shaft assembly into frame.

3. Install and secure a reel bearing housing to each end of dethatcher unit with capscrews and lockwashers previously removed.

4. Position reel shaft assembly so it is centered between dethatcher side plates within .12".

5. Use a drive pin and hammer to tighten the locking collars on the reel shaft bearings. Tighten in direction of rotation. Tighten setscrews (2).

6. Secure counterweight to end of dethatcher unit with (2) capscrews and washers previously removed.

7. Secure reel motor to other end of dethatcher unit with (2) capscrews and washers previously removed.