FORM NO. 3319–816

TORO®

Z–Master 250 Series

Z–252

Traction Unit

Model No. 74200–890001

Operator's Manual

IMPORTANT: Read this manual carefully. It contains information about your safety and the safety of others. Also become familiar with the controls and their proper use before you operate the product.

Introduction

Thank you for purchasing a Toro product.

All of us at Toro want you to be completely satisfied with your new product, so feel free to contact your local Authorized Service Dealer for help with service, genuine replacement parts, or other information you may require.

Whenever you contact your Authorized Service Dealer or the factory, always know the model and serial numbers of your product. These numbers will help the Service Dealer or Service Representative provide exact information about your specific product. You will find the model and serial number plate located in a unique place on the product as shown below.

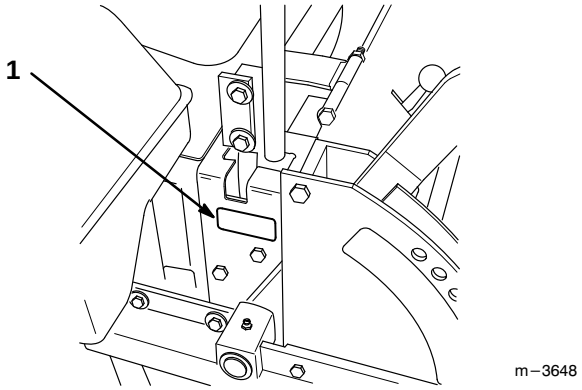

1. Model and Serial Number Plate

For your convenience, write the product model and serial numbers in the space below.

Model No: _____

Serial No. _____

Read this manual carefully to learn how to operate and maintain your product correctly. Reading this manual will help you and others avoid personal injury and damage to the product. Although we design, produce and market safe, state-of-the-art products, you are responsible for using the product properly and safely. You are also responsible for training persons, who you allow to use the product, about safe operation.

The warning system in this manual identifies potential hazards and has special safety messages that help you and others avoid personal injury, even death. DANGER, WARNING and CAUTION are signal words used to identify the level of hazard. However, regardless of the hazard, be extremely careful.

DANGER signals an extreme hazard that will cause serious injury or death if the recommended precautions are not followed.

WARNING signals a hazard that may cause serious injury or death if the recommended precautions are not followed.

CAUTION signals a hazard that may cause minor or moderate injury if the recommended precautions are not followed.

Two other words are also used to highlight information. “Important” calls attention to special mechanical information and “Note” emphasizes general information worthy of special attention.

The left and right side of the machine is determined by sitting on the seat in the normal operator’s position.

⚠ WARNING: ⚠

The engine exhaust from this product contains chemicals known to the State of California to cause cancer, birth defects, or other reproductive harm.

©The Toro Company – 1998
All Rights Reserved

Contents

	Page
Safety	2
Safe Operating Practices	2
Slope Chart	5
Safety and Instruction Decals	7
Gasoline and Oil	9
Recommended Gasoline	9
Stabilizer/Conditioner	9
Filling the Fuel Tank	9
Check Engine Oil Level	9
Assembly	10
Loose Parts	10
Install Seat Retaining Rod	11
Tire Pressure	11
Front Weight Kit Safety Requirement	11
Install Motion Control Levers	12
Activate the Battery	13
Install Battery	14
Install Mower Mounts	15
Install Power Take Off (PTO) Spring	15
Operation	16
Think Safety First	16
Controls	16
Parking Brake	16
Starting and Stoppingv the Engine	17
Operating the Power Take Off (PTO)	18
The Safety Interlock System	19
Driving Forward or Backward	20
Stopping the Machine	20
Instruments	21
Fuel Tanks	21
Adjusting Height-of-Cut	22
Positioning the Seat	22
Pushing the Machine by Hand	23
Maintenance	24
Service Interval Chart	24
Air Cleaner	25
Engine Oil	26
Spark Plug	28
Greasing and Lubrication	29
Cleaning the Cooling Systems	30
Tire Pressure	30
Fuel Filter	30
Fuel Tank	31
Hydraulic System	32
Adjusting Motion Controls	34
Replacing the Pump Drive Belt	35
Adjustment Parking Brake	36
Fuse	36
Battery	37
Wiring Diagram	38
Cleaning and Storage	39
Troubleshooting	40
Warranty	Back Cover

Safety

Improper use or maintenance by the operator or owner can result in injury. To reduce the potential for injury, comply with these safety instructions and always pay attention to the safety alert ⚠ symbol, which means CAUTION, WARNING, or DANGER—"personal safety instruction." Failure to comply with the instruction may result in personal injury or death.

Safe Operating Practices

This product is capable of amputating hands and feet and throwing objects. Always follow all safety instructions to avoid serious injury or death.

⚠ WARNING

POTENTIAL HAZARD

- **Engine exhaust contains carbon monoxide, which is an odorless, deadly poison.**

WHAT CAN HAPPEN

- **Carbon monoxide can kill you and is also known to the State of California to cause birth defects.**

HOW TO AVOID THE HAZARD

- **Do not run engine indoors or in an enclosed area.**

This product is designed for cutting and recycling grass or, when equipped with a grass bagger, for catching cut grass. Any use for purposes other than these could prove dangerous to user and bystanders.

Note: This engine is NOT equipped with a spark arrestor muffler. Use or operation of this mower in the State of California on any forest-covered or unimproved grass-covered land, without an approved spark arrester muffler, is a violation of the law. Other states may have similar laws.

General Operation

1. Read, understand, and follow all instructions in the operator's manual and on the machine before starting.

2. Allow only responsible adults who are familiar with the instructions to operate the machine.

3. Clear the area of objects such as rocks, toys, wire, etc., which could be picked up and thrown by the blade.

4. Be sure the area is clear of other people before mowing. Stop the machine if anyone enters the area.

5. Never carry passengers.

6. Do not mow in reverse unless absolutely necessary. Always look down and behind before and while backing.

7. Be aware of the mower discharge direction and do not point it at anyone. Do not operate the mower without either the entire grass catcher or the guard in place.

8. Slow down before turning. Sharp turns on any terrain may cause loss of control.

9. Never leave a running machine unattended. Always turn off blades, set parking brake, stop engine, and remove key before dismounting.

10. Turn off blades when not mowing.

11. Keep hands, feet, hair and loose clothing away from attachment discharge area, underside of mower and any moving parts while engine is running.

12. Stop the engine before removing the grass catcher or unclogging the chute.

13. Mow only in daylight or good artificial light.

14. Do not operate the machine while under the influence of alcohol or drugs.

15. Watch for traffic when operating near or crossing roadways.

16. Use extra care when loading or unloading the machine onto a trailer or truck.

17. Do not touch equipment or attachment parts which may be hot from operation. Allow to cool before attempting to maintain, adjust or service.

18. Before operating a machine with ROPS (roll over protection) be certain the seat belt retainers are attached to prevent the seat from pivoting forward.

Slope Operation

Slopes are a major factor related to loss-of-control and tip-over accidents, which can result in severe injury or death. All slopes require extra caution. If you cannot back up the slope or if you feel uneasy on it, do not mow it.

DO

- Mow up and down slopes greater than 5°, not across.
- Mow downhill only on slopes above 10°, never mow uphill. If a steep slope must be ascended, back up the hill, and drive forward down the hill, keeping the machine in gear.
- Remove obstacles such as rocks, tree limbs, etc. from the mowing area. Watch for holes, ruts or bumps, as uneven terrain could overturn the machine. Tall grass can hide obstacles.
- Use slow speed so that you will not have to stop or while on the slope.
- Follow the manufacturer’s recommendations for wheel weight or counterweights to improve stability.
- Use extra care with grass catchers or other attachments. These can change the stability of the machine.
- Keep all movement on slopes slow and gradual. Do not make sudden changes in speed or direction.
- Avoid starting or stopping on a slope. If tires lose traction, disengage the blades and proceed slowly straight down the slope.
- When operating machine on slopes, banks or drop offs, always have ROPS (roll over protection) installed.
- When operating a machine with ROPS (roll over protection) always use seat belt.
- Be certain that the seat belt can be released quickly if the machine is driven or rolls into ponds of water.
- Check carefully for overhead clearances (i.e. branches, doorways, electrical wires) before driving under any objects and do not contact them.

DO NOT

- Do not operate machine on hillsides or slopes exceeding 15°.
- Avoid turning on slopes. If you must turn, turn slowly and gradually downhill, if possible.
- Do not mow near drop-offs, ditches, or embankments. The machine could suddenly turn over if a wheel goes over the edge of a cliff or ditch, or if an edge caves in.
- Do not mow on wet grass. Reduced traction could cause sliding.
- Do not try to stabilize the machine by putting your foot on the ground.
- Do not use a grass catcher on steep slopes. Heavy grass bags could cause loss of control or overturn the machine.

Children

Tragic accidents can occur if the operator is not alert to the presence of children. Children are often attracted to the machine and the mowing activity. Never assume that children will remain where you last saw them. The following requirements must be followed to prevent injury to children.

1. Keep children out of the mowing area and under the watchful care of another responsible adult.

2. Be alert and turn the machine off if children enter the area.

3. Before and while backing, look behind and down for small children.

4. Never carry children. They may fall off and be seriously injured or interfere with safe machine operation.

5. Never allow children to operate the machine.

6. Use extra care when approaching blind corners, shrubs, trees, the end of a fence or other objects that may obscure vision.

Service

1. Stop the engine and disconnect spark plug wire(s) before performing any service, repairs, maintenance or adjustments.

2. Use extra care when handling gasoline and other fuels. They are flammable and vapors are explosive.

A. Use only an approved container.

B. Never remove the gas cap or add fuel when the engine is running. Allow the engine to cool before refueling. Do not smoke.

C. Never refuel the machine indoors.

D. Never store the machine or fuel container inside where there is an open flame, such as near a water heater or furnace.

3. Never run a machine inside a closed area.

4. Keep nuts and bolts tight, especially the blade attachment bolts. Keep equipment in good condition.

5. Never tamper with safety devices. Check safety systems for proper operation before each use.

6. Keep the machine free of grass, leaves, or other debris build-up. Clean up oil or fuel spillage. Allow the machine to cool before storing.

7. Stop and inspect the equipment if you strike an object. Repair, if necessary, before restarting.

8. Grass catcher components are subject to wear, damage and deterioration, which could expose moving parts or allow objects to be thrown. Frequently check components and replace with manufacturer’s recommended parts, when necessary.

9. Mower blades are sharp and can cut. Wrap the blade(s) or wear gloves, and use extra caution when servicing them.

10. Use only genuine replacement parts to ensure that original standards are maintained.

11. Check brake operation frequently. Adjust and service as required.

12. Battery acid is poisonous and can cause burns. Avoid contact with skin, eyes and clothing. Protect your face, eyes and clothing when working with a battery.

13. Battery gases can explode. Keep cigarettes, sparks and flames away from battery.

14. Hydraulic fluid escaping under pressure can penetrate the skin and cause injury. Use cardboard or paper to find hydraulic leaks.

15. Never modify ROPS (roll over protection) frames or structures because they are specifically designed, sized, located and tested for injury reduction. If a rollover occurs, a modified ROPS will not provide adequate protection.

Slope Chart

Read all safety instructions on pages 2–4.

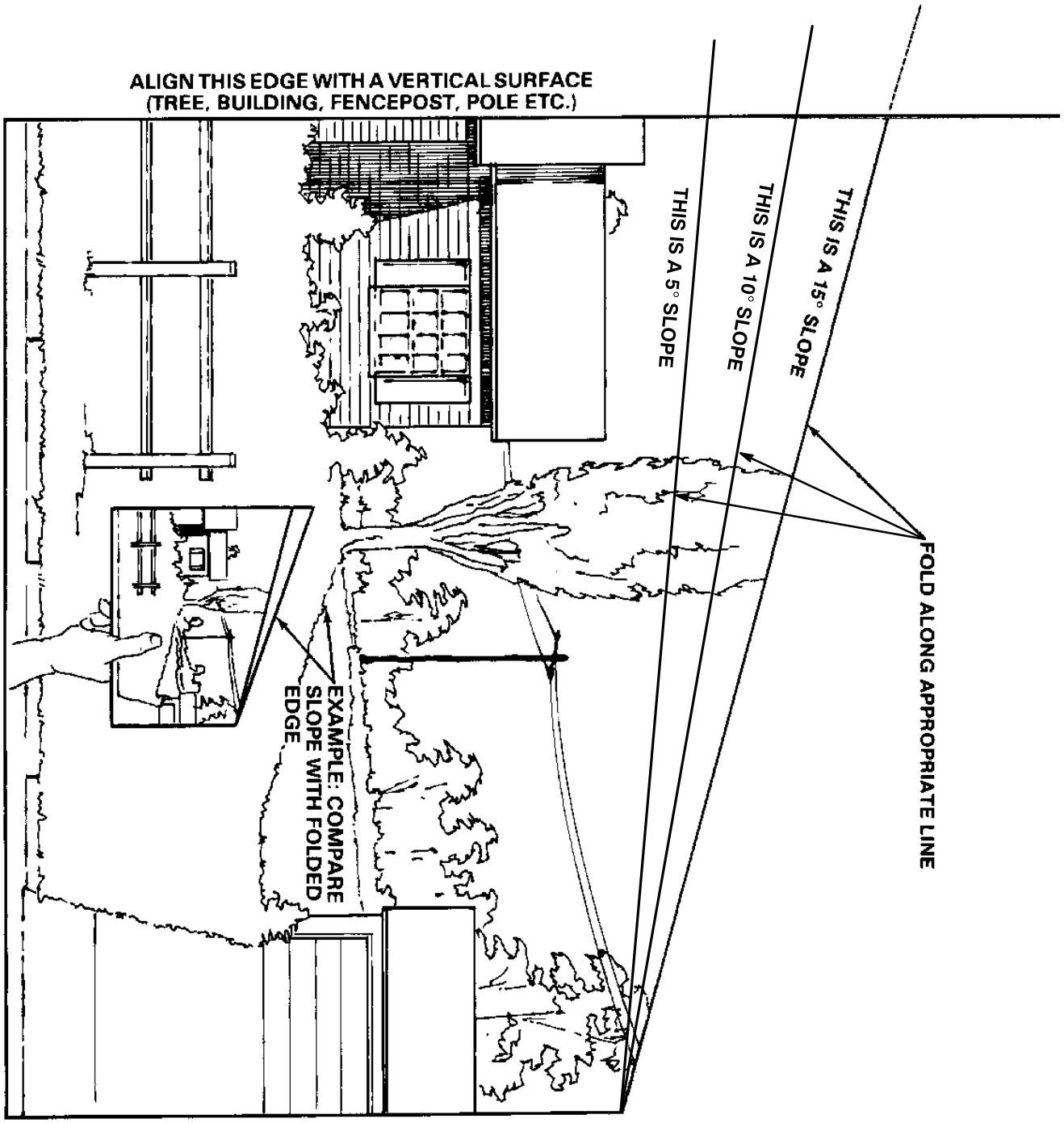

Safety and Instruction Decals

Safety decals and instructions are easily visible to the operator and are located near any area of potential danger. Replace any decal that is damaged or lost.

TOP OF CONSOLE UNDER SEAT
(Part No. E513747)

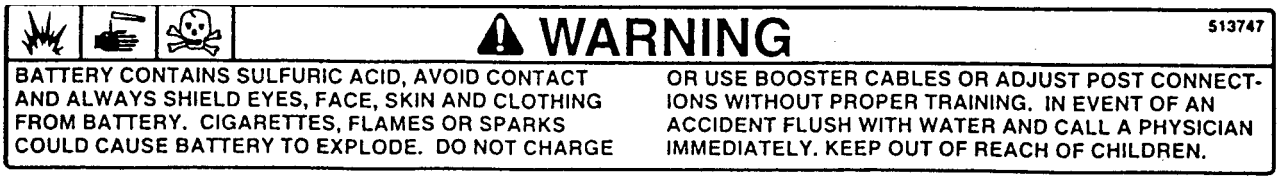

ON RIGHT SIDE OF HEIGHT OF CUT PLATE
(Part No E633345)

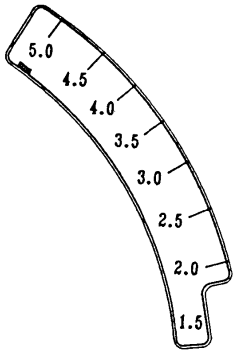

ON LEFT SIDE OF HEIGHT–OF–CUT PLATE
(Part No E633706)

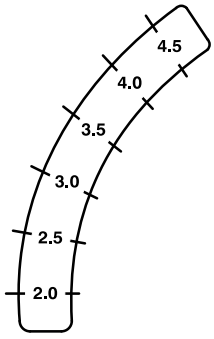

ON TOP OF CONSOLE LEFT AND RIGHT SIDES
(Part No. E633354)



ON TOP OV HYDRAULIC RESERVOIR
(Part No. E513890)

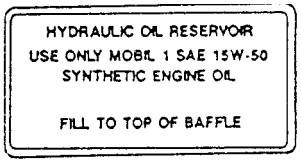

ON RUBBER FLAP BEHIND SEAT
(Part No. E303517)

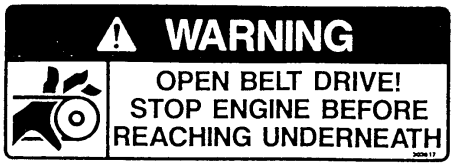

ON HYDRAULIC RESERVOIR MOUNTING BRACKET
(Part No. E513929)

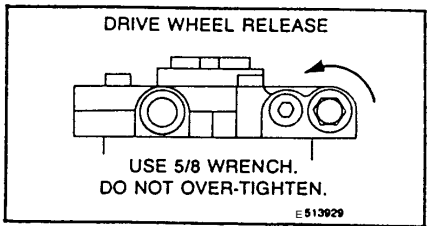

ON CONSOLE AND RUBBER FLAP BEHIND SEAT
(Part No. E633462)

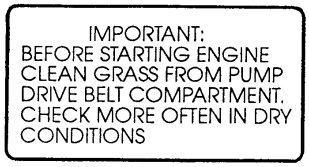

BELOW CENTER OF CONSOLE
(Part No. E633346)

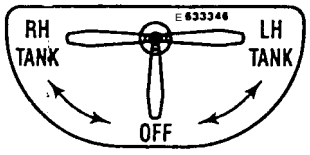

UNDER FOOTREST
(Part No. E633766)

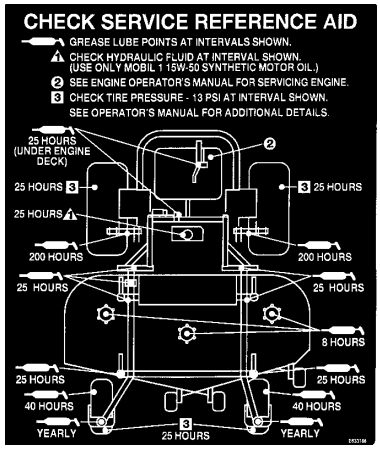

ON RUBBER FLAP
BEHIND SEAT
(Part No. E513748)

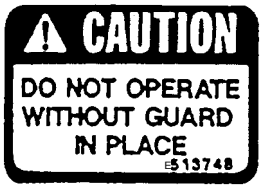

ONHYDRAULIC TANK
(Part No. 65–2690)



ON TOP OF RIGHT
ENGINE BAFFLE
(Part No. E633771)

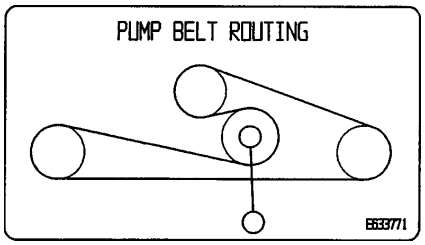

ON LEFT FRONT OF FRAME
(Part No. E633818)



ON CONTROL PANEL
(Part No. E633738)

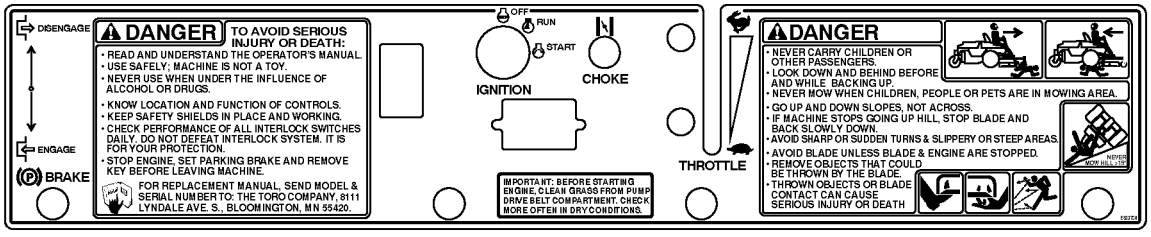

Gasoline and Oil

Recommended Gasoline

Use UNLEADED Regular Gasoline suitable for automotive use (85 pump octane minimum). Leaded regular gasoline may be used if unleaded regular is not available.

IMPORTANT: Never use methanol, gasoline containing methanol, or gasohol containing more than 10% ethanol because the fuel system could be damaged. Do not mix oil with gasoline.

⚠ DANGER

POTENTIAL HAZARD

- **In certain conditions gasoline is extremely flammable and highly explosive.**

WHAT CAN HAPPEN

- **A fire or explosion from gasoline can burn you, others, and cause property damage.**

HOW TO AVOID THE HAZARD

- **Use a funnel and fill the fuel tank outdoors, in an open area, when the engine is cold. Wipe up any gasoline that spills.**
- **Do not fill the fuel tank completely full. Add gasoline to the fuel tank until the level is 1/4” to 1/2” (6 mm to 13 mm) below the bottom of the filler neck. This empty space in the tank allows gasoline to expand.**
- **Never smoke when handling gasoline, and stay away from an open flame or where gasoline fumes may be ignited by a spark.**
- **Store gasoline in an approved container and keep it out of the reach of children. Never buy more than a 30-day supply of gasoline.**

Stabilizer/Conditioner

Add the correct amount of gas stabilizer/conditioner to the gas. Using a stabilizer/conditioner in the machine:

- Keeps gasoline fresh during storage
- Cleans the engine while it runs
- Eliminates gum-like buildup in the fuel system, which causes hard starting

IMPORTANT: Never use fuel additives containing methanol or ethanol.

Filling the Fuel Tank

1. Shut the engine off and set the parking brake.
2. Clean around each fuel tank cap and remove the cap. Add unleaded regular gasoline to both fuel tanks, until the level is 1/4 to 1/2 inch (6 mm to 13 mm) below the bottom of the filler neck. This space in the tank allows gasoline to expand. Do not fill the fuel tanks completely full.
3. Install fuel tank caps securely. Wipe up any gasoline that may have spilled.
4. Fuel gauge is located in right side tank.

Check Engine Oil Level

Before you start the engine and use the machine, check the oil level in the engine crankcase; refer to Checking Oil Level, page 27.

Assembly

Loose Parts

Note: Use the chart below to verify all parts have been shipped.

DESCRIPTION	QTY.	USE
Retaining rod	1	Install seat rod
Bolt 5/16–18 x 1” (26 mm)	1	
Locknut 5/16”	1	
Control lever–right	1	Install motion control levers
Control lever–left	1	
Bolt 3/8–1 x 1” (26 mm)	4	
Spring washer 3/8”	4	
Strut–right	1	Install mower mounts to traction unit
Strut–left	1	
Bolt 5/8–11 x 5” (127 mm)	2	
Lock washer 5/8”	2	
Nut 5/8–11	2	
Bolt 7/16–14 x 1-1/2” (38 mm)	4	
Flange nut 7/16–14	8	
Chain assembly	4	
Strut rod	2	Install mower to traction unit
Bolt 5/16–18 x 3/4” (19 mm)	2	
Flange locknut 5/16–18	2	
Spring–PTO	1	
Key	2	Read before operating machine
Operator’s Manual	1	
Engine Operator’s Manual	1	
Parts Catalog	1	Fill out and return to Toro
Registration card	1	

Install Seat Retaining Rod

5. Tilt seat up. Remove 5/16” locknut from bolt attaching seat retaining rod to seat frame (Fig. 1).

6. Remove retaining rod from seat and insert the ”L” shaped end of the rod into the hole directly above the left–side hydraulic pump mounting hardware (the ”L” must be positioned to the right) (Fig. 1).

7. Place the seat retaining rod to the outside of the mounting tab of the seat frame and secure with 5/16–18 x 1” (26 mm) bolt and 5/16” locknut (Fig. 1).

8. Tighten until snug, then loosen so the rod pivots freely.

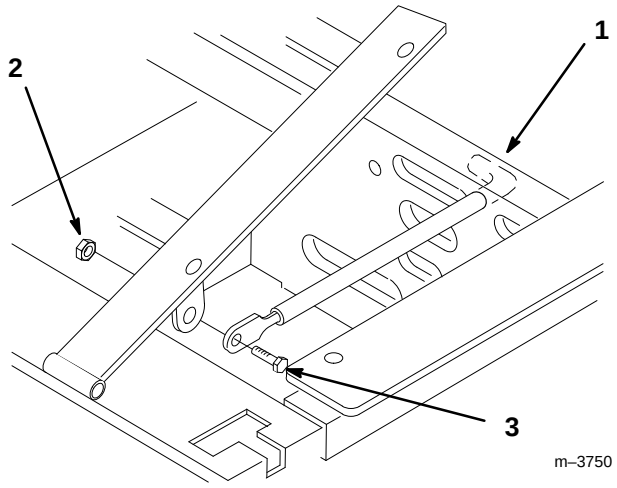

Figure 1

1. L end of retaining rod
2. Locknut 5/16”
3. Bolt 5/16–18 x 1” (26 mm)

Tire Pressure

Check the air pressure in the front and rear tires (Fig. 2).

Pressure: 13 psi (90 kPa)

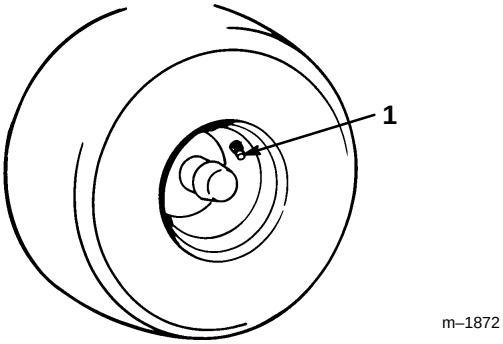

Figure 2

1. Valve stem

Front Weight Kit Safety Requirement

⚠ DANGER

POTENTIAL HAZARD

- **When operating the 52” mower attachment without Front Weight E632802, the tractor may become unstable.**

WHAT CAN HAPPEN

- **Loss of traction and stability may cause loss of tractor control.**

HOW TO AVOID THE HAZARD

- **NEVER operate tractor, unless the Front Weight E632802 is installed.**

IMPORTANT: The tractor requires Front Weight when equipped with a 52” Mower Attachment.

Install Motion Control Levers

9. Remove the (4) 3/8–16 x 1” (26 mm) bolts and (4) 3/8 spring washers which attach the motion control levers to the control arm shafts for shipping (Fig. 3).

10. Place the levers (with the mounting plate towards the rear) on the outside of the control arm shaft and secure with (4) 3/8–16 x 1” (26 mm) bolts and (4) 3/8 spring washers (Fig. 3).

11. Position the lever so the bolts are in the center of the slots on the lever mounting plate and tighten until snug.

12. Align the front\rear position of the levers, with each other, in the neutral position. Loosen hardware and adjustment by sliding/tilting the lever(s) forward or backward until properly aligned(Fig. 3).

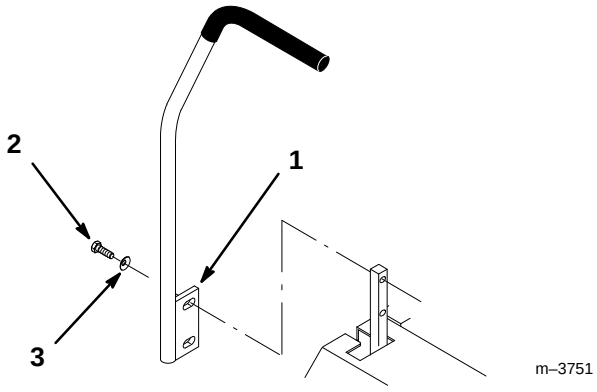

Figure 3

1. Mounting plate
2. Bolt 3/8–18 x 1” (26 mm)
3. Spring washer 3/8”

13. If the ends of the levers hit against each other, while in the drive position (Fig 4) (levers rotated in as far as possible).

14. Make adjustments by moving the levers outwards to the neutral lock position and carefully bend them outward. Move them back to the drive position and check for clearance, repeat if necessary.

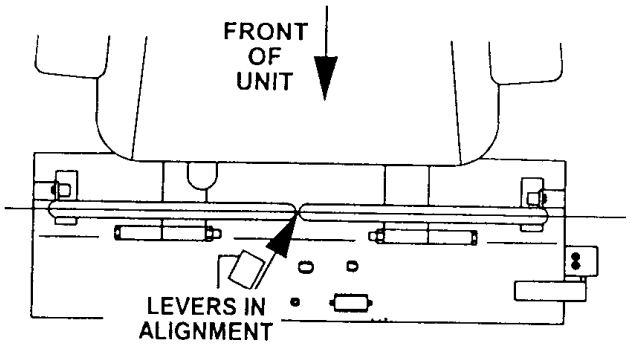

Figure 4

Activate the Battery

Bulk electrolyte with 1.260 specific gravity must be purchased from a local battery supply outlet.

1. Remove the battery from the machine.

IMPORTANT: Be careful not to damage the long vent tube when removing the battery box.

⚠ DANGER

POTENTIAL HAZARD

- **Battery electrolyte contains sulfuric acid which is a deadly poison and it causes severe burns.**

WHAT CAN HAPPEN

- **If you carelessly drink electrolyte you could die or if it gets onto your skin you will be burned.**

HOW TO AVOID THE HAZARD

- **Do not drink electrolyte and avoid contact with skin, eyes or clothing. Wear safety glasses to shield your eyes and rubber gloves to protect your hands.**
- **Fill the battery where clean water is always available for flushing the skin.**
- **Follow all instructions and comply with all safety messages on the electrolyte container.**

2. Remove filler caps from the battery. Slowly pour electrolyte into each cell until the electrolyte level is up to the lower part of the tube (Fig. 5).

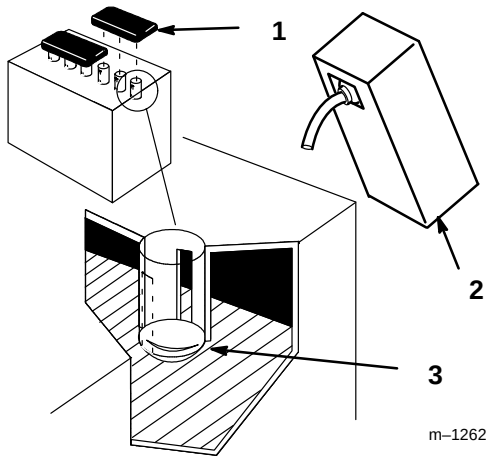

Figure 5

1. Filler caps
2. Electrolyte
3. Lower part of the tube

3. Leave the covers off and connect a 3 to 4 amp battery charger to the battery posts (Fig. 6). Charge the battery at a rate of 4 amperes or less for 4 hours (12 volts).

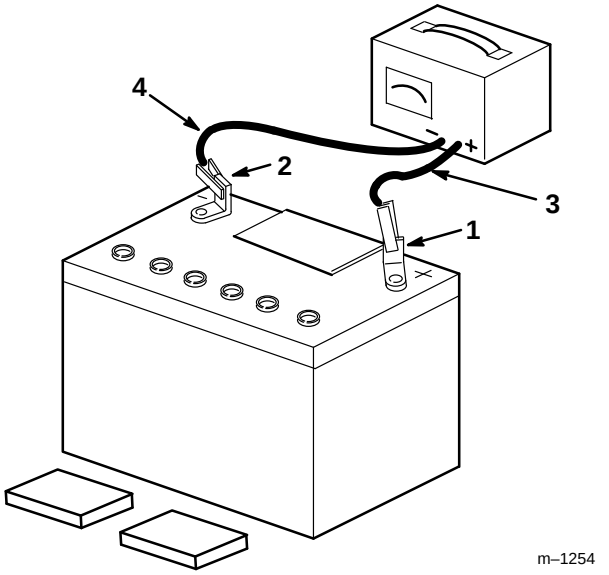

Figure 6

1. Positive post
2. Negative post
3. Charger red (+) wire
4. Charger black (–) wire

⚠ WARNING

POTENTIAL HAZARD
- **Charging battery produces gasses.**

WHAT CAN HAPPEN
- **Battery gasses can explode.**

HOW TO AVOID THE HAZARD
- **Keep cigarettes, sparks and flames away from battery.**

4. When the battery is fully charged, disconnect the charger from the electrical outlet then from the negative and positive battery posts (Fig. 6).

5. Slowly pour electrolyte into each cell until the level is once again up to the “UPPER” line on the battery case (Fig. 5) and install covers.

Install Battery

6. Position battery in tray with terminal posts toward the engine (Fig. 7).

7. Slide the red terminal boot onto the positive (red) battery cable.

8. Install the positive (red) battery cable to positive (+) battery terminal then negative battery cable and ground wire to the negative (–) battery terminal.

9. Secure cables with (2) 1/4 x 3/4” (19 mm) bolts 1/4” washers and 1/4” locknuts (Fig. 7).

10. Secure battery with J-bolts, hold down clamp and (2) 1/4” washers and (2) 1/4” wing nuts (Fig. 7).

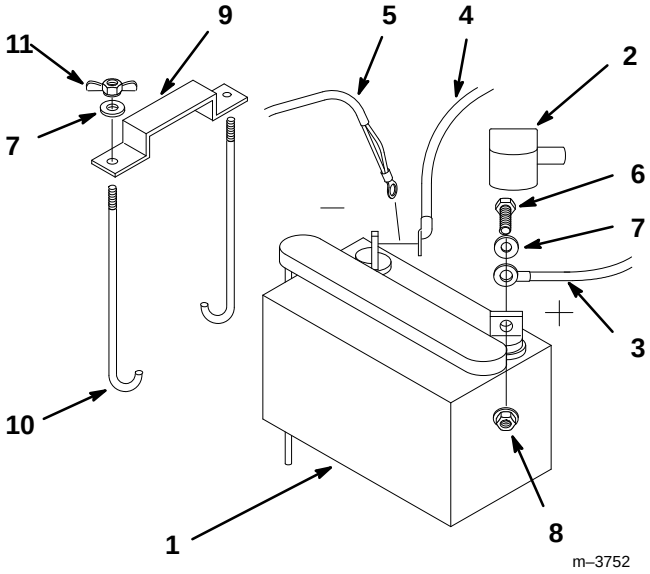

Figure 7

1. Battery
2. Terminal boot
3. Positive battery cable
4. Negative battery cable
5. Ground wire
6. Bolt 1/4–20 x 3/4” (19 mm)
7. Washer 1/4”
8. Locknut 1/4”
9. Battery clamp
10. J-bolts
11. Wing nut 1/4”

When installing the mower the following assembly operations must also be completed.

Install Mower Mounts

1. Check length or strut, adjust to 15” if required (Fig. 8).

2. Attach left and right struts, with greases fitting up. Secure inside of rear frame member with 5/8–11 x 5” (127 mm) bolts, 5/8” lock washers and 5/8–11 nuts (Fig. 8).

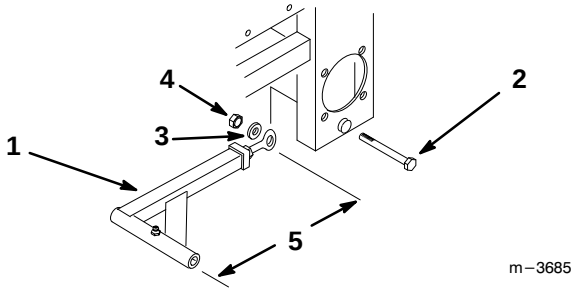

Figure 8

1. Strut
2. Bolt 5/8–11 x 5” (127 mm)
3. Lock washer 5/8”
4. Nut 5/8 11
5. 15” dimention

3. Remove one 7/16–14 flange nut from bolt in each chain assembly (Fig. 9).

4. Place bolt of chain into traction unit lift arm slot and secure with previously removed 7/16–14 flange nut (Fig. 9). Tighten flange nut securely.

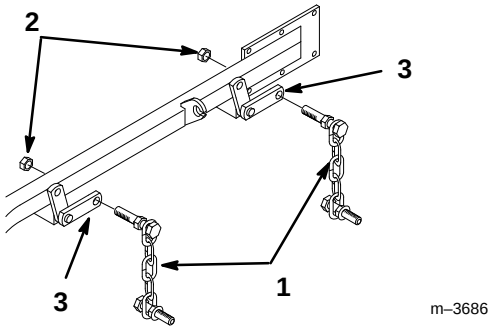

Figure 9

1. Lift chain assembly
2. Flange nut 7/16–14
3. Lift arm

Install Power Take Off (PTO) Spring

5. Install the PTO clutch spring. Hook one end around frame bolt, between washer and spacer (Fig 10). Stretch spring and hook other end to the PTO idler arm.

6. Install and adjust PTO Drive belt, refer to Replacing the PTO Drive Belt.

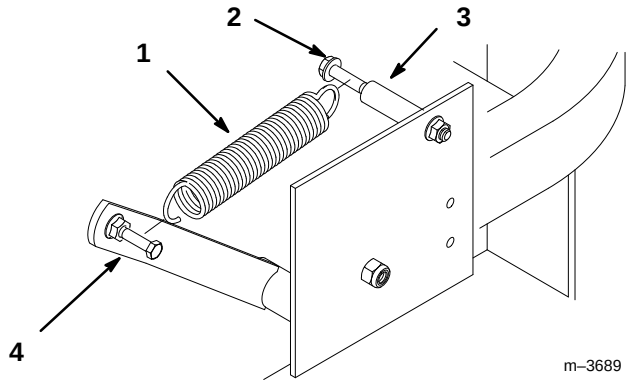

Figure 10

1. Spring
2. Washer
3. Spacer
4. PTO idler arm

Operation

Think Safety First

Please carefully read all the safety instructions on pages 2–8. Knowing this information could help you, your family, pets or bystanders avoid injury.

Controls

Become familiar with all the controls (Fig. 1) before you start the engine and operate the machine.

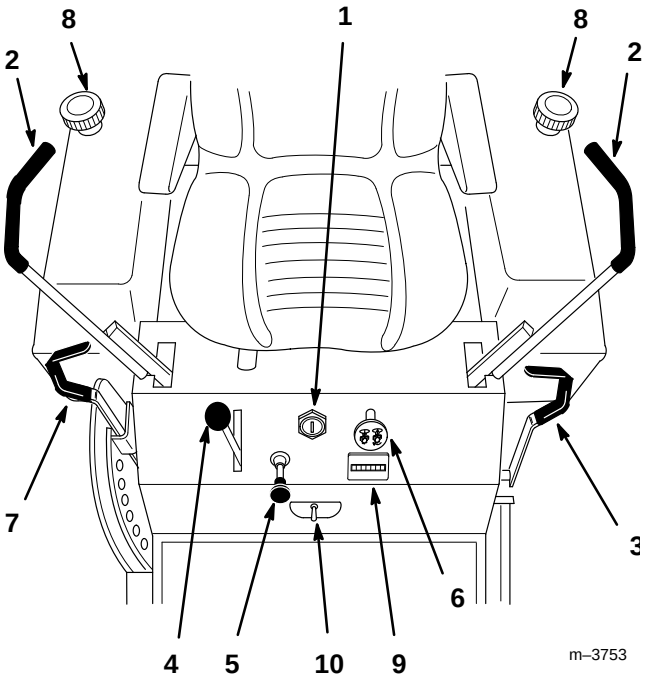

Figure 1

1. Ignition switch
2. Motion control lever
3. Parking brake lever
4. Throttle
5. Choke
6. Power take off (PTO)
7. Height-of-Cut lever
8. Fuel cap
9. Hourmeter
10. Fuel shut-off valve

Parking Brake

Always set the parking brake when you stop the machine or leave it unattended.

IMPORTANT: Do not park on slopes unless wheels are chicked or blocked.

Setting the Parking Brake

1. Move the motion control levers (Fig. 1) out to the neutral lock position.

2. Pull back and up on the parking brake lever to set the parking brake (Fig. 2). The parking brake lever should stay firmly in the “ENGAGED” position.

Releasing the Parking Brake

1. Push forward and down on the parking brake lever release the parking brake (Fig. 2). The parking brake is “DISENGAGED” and the lever rests against the front of the opening.

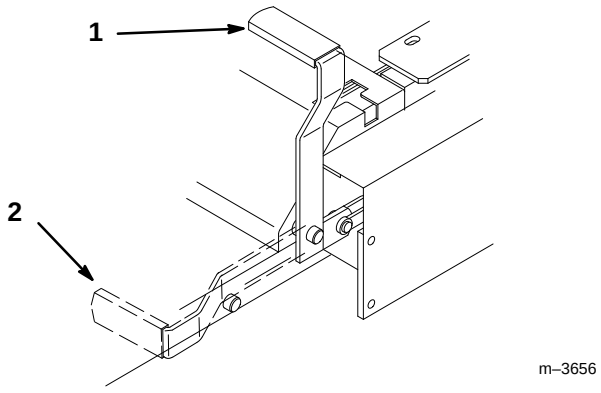

Figure 2

1. Parking brake-ON
2. Parking brake-OFF

Starting and Stopping the Engine

Starting

1. Sit down on the seat and move the motion controls to neutral locked position.
2. Set the parking brake; refer to Setting the Parking Brake, page 16.
3. Move the PTO (power take off) to “OFF” (Fig. 3).
4. Move the choke control to “ON” position before starting a cold engine.

   Note: A warm or hot engine may require choking. After engine starts, move choke control to “OFF” position.
5. Move the throttle control to the “FAST” position before starting a cold engine.
6. Turn ignition key “START” to energize starter. When engines starts, release key.

   IMPORTANT: Do not engage starter for more than 10 seconds at a time. If engine fails to start allow 30 second cool-down period between attempts. Failure to follow these instructions can burn out starter motor.
7. After the engine starts, move the choke to “OFF” (Fig. 4). If the engine stalls or hesitates, move the choke back to “ON” for a few seconds. Then move the throttle lever to desired setting. Repeat this as required.

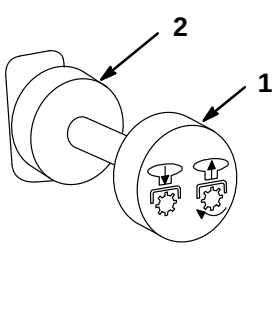

m–3729

Figure 3

1. PTO-On
2. PTO-Off

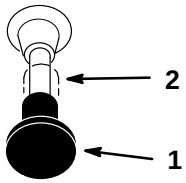

m–2719

Figure 4

1. Choke–On
2. Choke–Off

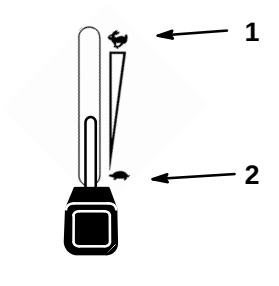

m–2720

Figure 5

1. Fast
2. Slow

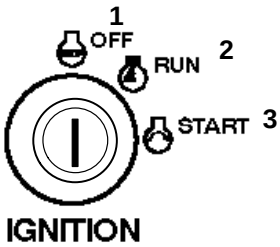

Figure 6

1. Off
2. Run
3. Start

Stopping

1. Move the throttle lever to “SLOW” (Fig. 5).
2. Move the PTO (power take off) to “OFF” (Fig. 3).
3. Turn the ignition key to “OFF” (Fig. 6).

   Note: If the engine has been working hard or is hot, let it idle for a minute before turning the ignition key “OFF.” This helps cool the engine before it is stopped. In an emergency, the engine may be stopped by turning the ignition key to “OFF.”

4. Pull wire off spark plug(s) to prevent possibility of accidental starting before transporting or storing machine.
5. Close fuel shut off valve, on front panel before transporting or storing machine.

   IMPORTANT: Make sure fuel shut off valve is closed before transporting or storing machine, as fuel leakage may occur.

Operating the Power Take Off (PTO)

The power take off (PTO) switch engages and disengages power to the electric clutch.

Engaging the PTO

1. Release pressure on the traction control levers and place in neutral, refer to traction unit Operator’s Manual.
2. Release the parking brake, refer to traction unit Operator’s Manual.
3. Pull out on the power take off (PTO) switch to engage (Fig. 7).

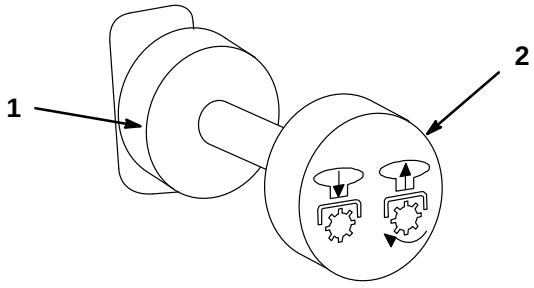

m–3739

Figure 7

1. PTO – Off
2. PTO – On

Disengaging the PTO

1. To disengage push the PTO switch to the “OFF” position (Fig. 7).

The Safety Interlock System

Understanding the Safety Interlock System

The safety interlock system is designed to prevent the engine from starting unless:

- You are sitting on the seat
- The parking brake is on “ENGAGED”
- The power take off (PTO) is disengaged “OFF”
- The motion control levers are in neutral

The safety interlock system also is designed to stop the engine when the traction controls are moved with the parking brake on “ENGAGED” or if you rise from the seat when the PTO is “ON” engaged.

Testing the Safety Interlock System

Test the safety interlock system before you use the machine each time. If the safety system does not operate as described below, have an Authorized Service Dealer repair the safety system immediately.

1. Sitting on the seat, “ENGAGE” parking brake and move PTO “ON”. Try starting the engine; the engine should not crank.
2. Sitting on the seat, “ENGAGE” parking brake and move PTO “OFF”. Move either motion control lever (forward or reverse). Try starting the engine; the engine should not crank. Repeat with other motion control lever.
3. Sitting on the seat, “ENGAGE” parking brake, move PTO “OFF” and lock the motion control levers in neutral. Now start the engine. While the engine is running, release the parking brake, engage the PTO and rise slightly from the seat; the engine should stop.
4. Sitting on the seat, “ENGAGE” parking brake, PTO “OFF” and lock the motion control levers in neutral. Now start the engine. While the engine is running, center the motion controls and move (forward or reverse); the engine should stop.

Driving Forward or Backward

The throttle control regulates the engine speed as measured in rpm (revolutions per minute). Place the throttle control in the “FAST” position for best performance. Always operate in the full throttle position

Forward

1. Release the parking brake; refer to Setting the Parking Brake, page 16.
2. Move levers to the center, un-locked position.
3. To go forward, slowly push the motion control levers forward (Fig. 8).

   Note: Engine will kill if traction control levers are moved with parking brake engaged.

To go straight, apply equal pressure to both motion control levers (Fig. 8).

To turn, release pressure on the motion control lever toward the direction you want to turn (Fig. 8).

The farther you move the traction control levers in either direction, the faster the machine will move in that direction.

To stop pull the motion control levers to neutral.

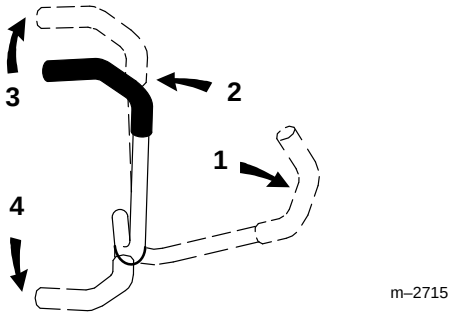

Figure 8

1. Motion control lever-neutral lock position
2. Center un-lock position
3. Forward
4. Backward

Backward

1. Move levers to the center, un-locked position.
2. To go backward, slowly pull the motion control levers rearward (Fig. 8).

To go straight, apply equal pressure to both motion control levers (Fig. 8).

To turn, release pressure on the motion control lever toward the direction you want to turn (Fig. 8).

To stops push the motion control levers to neutral.

Stopping the Machine

To stop the machine, move the traction control levers to neutral and separate to lock, disengage the power take off (PTO), and turn the ignition key to “OFF” to stop the engine. Also set the parking brake when you leave the machine; refer to Setting the Parking Brake, page 16. Remember to remove the key from the ignition switch.

⚠ CAUTION

POTENTIAL HAZARD

- **Someone could move or attempt to operate the tractor while it is unattended.**

WHAT CAN HAPPEN

- **Children or bystanders may be injured if they use the tractor.**

HOW TO AVOID THE HAZARD

- **Always remove the ignition key and set the parking brake when leaving the machine, even if just for a few minutes.**

Instruments

Hour Meter

The hour meter records the number of hours the engine has operated. It operates when the engine is running. Use these times for scheduling regular maintenance.

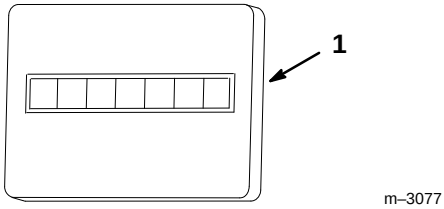

Figure 9

1. Hour meter

Fuel Tanks

The unit has two fuel tanks, located on the left and right sides. Each tank connects to the fuel shut off valve in the control panel from there a common fuel line leads to the engine (Fig. 10).

To use the right side fuel tank rotate the fuel shut off valve 1/4 turn to the right from the off location. This uses fuel from the right side tank only. When the right hand fuel tank is empty, move the fuel shut off valve 1/4 turn to the left from the off position.

Close fuel shut off valve, on front panel before transporting or storing machine.

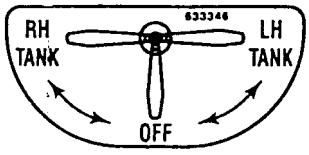

Figure 10

1. Shut off valve

Adjusting Height-of-Cut

The height-of-cut is adjusted from 1-1/2” to 5” (38 to 127 mm) in 1/2” (13 mm) increments by relocating clevis pin in different hole locations.

1. Raise the height-of-cut lever to the transport position (also the 5” (127 mm) cutting height position) (Fig. 11).

2. To adjust, remove hairpin cotter and clevis pin from height-of-cut bracket (Fig. 11).

3. Select hole in height-of-cut bracket corresponding to the height-of-cut desired. Lift handle to transport position, insert clevis pin (Fig. 11).

4. Secure clevis pin with hairpin cotter (Fig. 11).

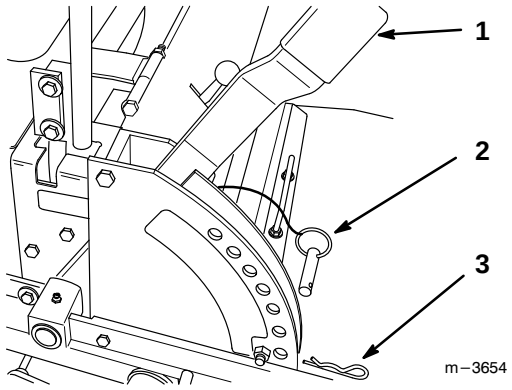

Figure 11

1. Height of cut lever
2. Clevis Pin
3. Hairpin Cotter

Positioning the Seat

The seat can move forward and backward. Position the seat where you have the best control of the machine and are most comfortable.

1. To adjust, move the lever sideways to unlock seat (Fig. 12).

2. Slide the seat to the desired position and release lever to lock in position.

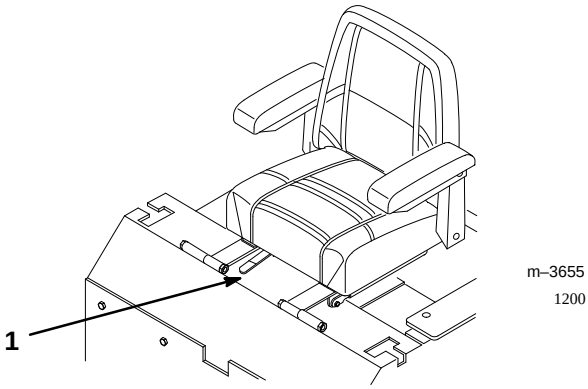

Figure 12

1. Adjustment knob

Pushing the Machine by Hand

IMPORTANT: Always push the machine by hand. Never tow the machine because hydraulic damage may occur.

To Push the Machine

1. Disengage the power take off (PTO) and turn the ignition key to “OFF” to stop the engine.
2. Rotate the by-pass valves counterclockwise 1 turn to push. This allows hydraulic fluid to by-pass the pump enabling the wheels to turn (Fig. 13).

   IMPORTANT: Rotate by-pass valve a maximum of 2 turns so the valve does not come out of the body causing fluid to run out.

To Operate the Machine

1. Turn the by-pass valves in to operate (Fig. 13).

   Note: The machine will not drive unless by-pass valves are turned in.

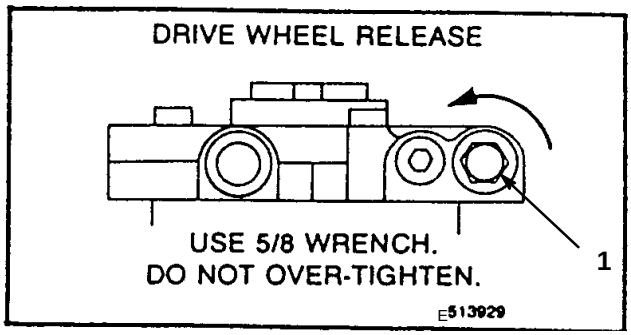

Figure 13

1. By-pass valve

Maintenance

Service Interval Chart

Service Operation	Each Use	8 Hours	25 Hours	50 Hours	100 Hours	200 Hours	Storage Service
Hydraulic fluid–check level	Initial		X				X
Oil—check level	X						X
Oil—change*		Initial			X		X
Oil Filter–change (200 hours or every other oil change)						X	X
Hydraulic filter–change		Initial				X	X
Safety System—check	X						X
Chassis—grease*			X				X
Linkage bushings—oil*			X				X
Foam Air Cleaner—service*			X				X
Paper Air Cleaner—replace*					X		X
Spark Plug(s)—check						X	X
Belts—check for wear/cracks				X			X
Gasoline—drain							X
Cooling systems–clean	X				X		X
Hydraulic lines–check					X		X
Battery–check electrolyte			X				X
Battery–charge, Disconnect cables							X
Fuel Filter—replace						X	X
Tires—check pressure				X			X
Chipped Surfaces—paint							X
* More often in dusty, dirty conditions							

⚠ CAUTION

POTENTIAL HAZARD

- **If you leave the key in the ignition switch, someone could start the engine.**

WHAT CAN HAPPEN

- **Accidental starting of the engine could seriously injure you or other bystanders.**

HOW TO AVOID THE HAZARD

- **Remove the key from the ignition switch and pull the wire(s) off the spark plug(s) before you do any maintenance. Also push the wire(s) aside so it does not accidentally contact the spark plug(s).**

Air Cleaner

Foam Element: Clean and re-oil after every 25 operating hours.

Paper Element: Replace after every 100 operating hours.

Note: Service the air cleaner more frequently (every few hours) if operating conditions are extremely dusty or sandy.

Removing the Foam and Paper Elements

1. Disengage the power take off (PTO), set the parking brake, and turn the ignition key to "OFF" to stop the engine. Remove the key.

2. Clean around the air cleaner to prevent dirt from getting into the engine and causing damage. Unscrew the knob and remove the air cleaner cover (Fig. 14).

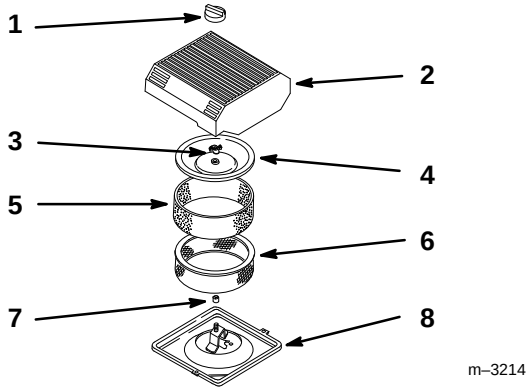

Figure 14

1. Knob
2. Air cleaner cover
3. Cover nut
4. Cover
5. Foam element
6. Paper element
7. Rubber seal
8. Air cleaner base

3. Carefully slide the foam element off the paper element (Fig. 14).

4. Unscrew the cover nut and remove the cover and paper element (Fig. 14).

Cleaning the Foam and Paper Elements

1. Foam Element

A. Wash the foam element in liquid soap and warm water. When the element is clean, rinse it thoroughly.

B. Dry the element by squeezing it in a clean cloth (do not wring).

C. Put one or two ounces of oil on the element (Fig. 15). Squeeze the element to distribute the oil.

IMPORTANT: Replace the foam element if it is torn or worn.

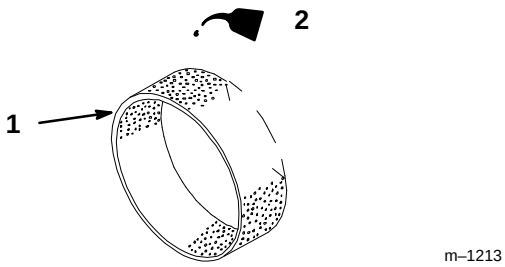

Figure 15

1. Foam element
2. Oil

2. Paper Element

A. Lightly tap the element on a flat surface to remove dust and dirt (Fig. 16).

B. Inspect the element for tears, an oily film, and damage to the rubber seal.

IMPORTANT: Never clean the paper element with pressurized air or liquids, such as solvent, gas, or kerosene. Replace the paper element if it is damaged, defective, or cannot be cleaned thoroughly.

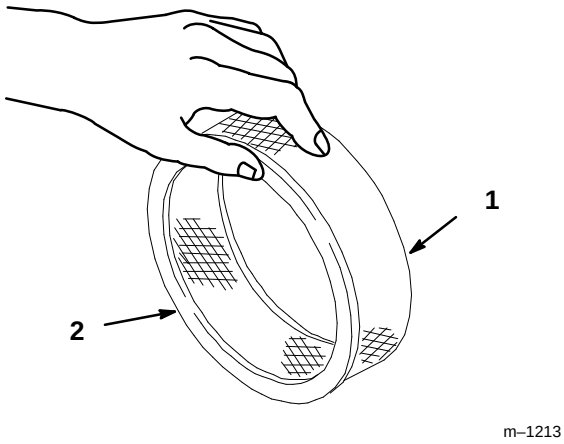

Figure 16

1. Paper element
2. Rubber seal

Installing the Foam and Paper Elements

1. Installing the Foam and Paper Elements

IMPORTANT: To prevent engine damage, always operate the engine with the complete foam and paper air cleaner assembly installed.

1. Carefully slide the foam element onto the paper air cleaner element (Fig. 14).

2. Place the air cleaner assembly onto the air cleaner base (Fig. 14).

3. Install the air cleaner cover and secure with cover nut (Fig. 14).

Engine Oil

Change oil:

- After the first 5 operating hours.
- After every 100 operating hours.

Note: Change oil more frequently when operating conditions are extremely dusty or sandy.

Oil Type: Detergent oil (API service SG or SH)

Crankcase Capacity: w/filter, 2.1 qt. (2 l)

Viscosity: See table below

USE THESE SAE VISCOSITY OILS

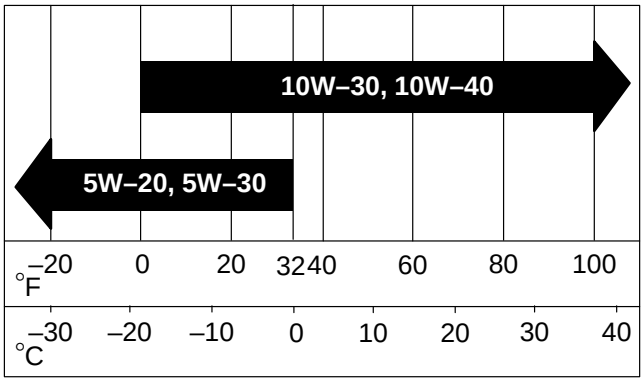

Checking Oil Level

1. Park the machine on a level surface, disengage the power take off (PTO) and turn the ignition key to “OFF” to stop the engine. Remove the key.
2. Clean around the oil dipstick (Fig. 17) so dirt cannot fall into the filler hole and damage the engine.
3. Unscrew the oil dipstick and wipe the metal end clean (Fig. 17).
4. Slide the oil dipstick fully into the filler tube, do not thread onto tube (Fig. 17). Pull the dipstick out and look at the metal end. If oil level is low, slowly pour only enough oil into the filler tube to raise the level to the “FULL” mark.

   IMPORTANT: Do not overfill the crankcase with oil because the engine may be damaged.

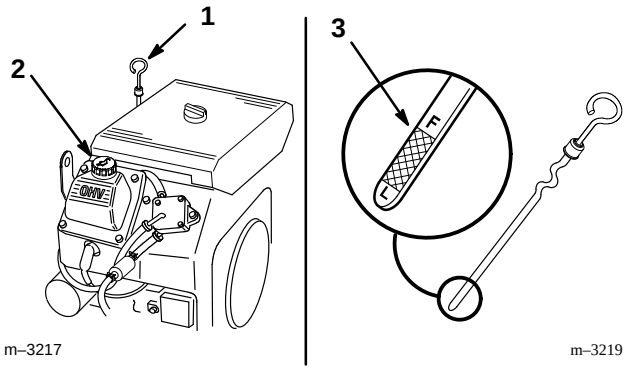

Figure 17

1. Oil dipstick
2. Filler tube
3. Metal end

Changing/Draining Oil

1. Start the engine and let it run five minutes. This warms the oil so it drains better.
2. Park the machine so that the drain side is slightly lower than the opposite side to assure the oil drains completely. Then disengage the power take off (PTO), set the parking brake, and turn the ignition key to “OFF” to stop the engine. Remove the key.
3. Place a pan below the oil drain. Remove the oil drain cap (Fig. 18).
4. When oil has drained completely, install the drain cap.

   Note: Dispose of the used oil at a certified recycling center.

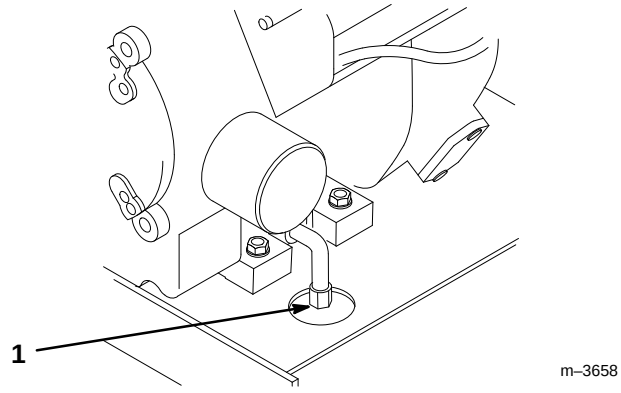

Figure 18

1. Oil drain cap

5. Slowly pour approximately 80% of the specified amount of oil specified, page 26, into the filler tube (Fig. 17). Now check the oil level; refer to Checking Oil Level, page 27. Slowly add additional oil to bring to “FULL” mark on dipstick.

Change Oil Filter

Replace the oil filter every 200 hours or every other oil change.

Note: Change oil filter more frequently when operating conditions are extremely dusty or sandy.

1. Drain the oil from the engine; refer to Changing/Draining Oil, page 27.
2. Remove the old filter and wipe the filter adapter (Fig. 19) gasket surface.
3. Pour new oil of the proper type in through the center hole. Stop pouring when the oil reaches the bottom of the threads. Allow a minute or two for the oil to be absorbed by filter material.
4. Apply a thin coat of new oil to the rubber gasket on the replacement filter (Fig. 19).

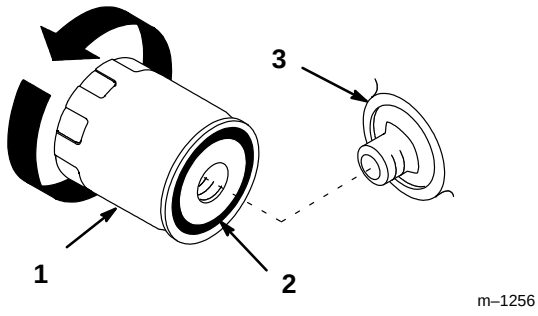

Figure 19

1. Oil filter
2. Gasket
3. Adapter

5. Install the replacement oil filter to the filter adapter. Turn the oil filter clockwise until the rubber gasket contacts the filter adapter, then tighten the filter an additional 1/2 turn (Fig. 19).
6. Fill the crankcase with the proper type of new oil; refer to Changing/Draining Oil, page 27.

Spark Plug

Check the spark plug(s) after every 200 operating hours. Make sure the air gap between the center and side electrodes is correct before installing the spark plug. Use a spark plug wrench for removing and installing the spark plug(s) and a gapping tool/feeler gauge to check and adjust the air gap. Install a new spark plug(s) if necessary.

Type: Champion RC12YC (or equivalent) Air Gap: 0.030 in. (0.76 mm)

Removing the Spark Plug(s)

1. Disengage the power take off (PTO), set the parking brake, and turn the ignition key to “OFF” to stop the engine. Remove the key.
2. Pull the wire(s) off the spark plug(s) (Fig. 20). Now clean around the spark plug(s) to prevent dirt from falling into the engine and potentially causing damage.
3. Remove the spark plug(s) and metal washer.

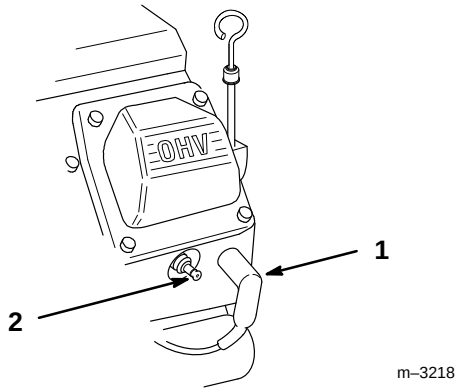

Figure 20

1. Spark plug wire
2. Spark plug

Checking the Spark Plug

1. Look at the center of the spark plug(s) (Fig. 21). If you see light brown or gray on the insulator, the engine is operating properly. A black coating on the insulator usually means the air cleaner is dirty.

   IMPORTANT: Never clean the spark plug(s). Always replace the spark plug(s) when it has: a black coating, worn electrodes, an oily film, or cracks.

2. Check the gap between the center and side electrodes (Fig. 21). Bend the side electrode (Fig. 21) if the gap is not correct.

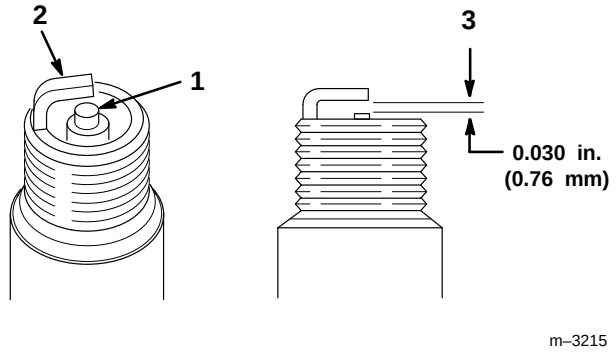

Figure 21

1. Center electrode insulator
2. Side electrode
3. Air gap (not to scale)

Installing the Spark Plug(s)

1. Install the spark plug(s). Make sure the air gap is set correctly.
2. Tighten the spark plug(s) to 20 ft-lb (27 N.m).
3. Push the wire(s) onto the spark plug(s) (Fig. 20).

Greasing and Lubrication

Lubricate the machine when shown on the CHECK SERVICE REFERENCE AID decal (Fig. 22). Grease more frequently when operating conditions are extremely dusty or sandy.

Grease Type: General-purpose grease.

How to Grease

1. Disengage the power take off (PTO) and turn the ignition key to “OFF” to stop the engine. Remove the key.
2. Clean the grease fittings with a rag. Make sure to scrape any paint off the front of the fitting(s).
3. Connect a grease gun to the fitting. Pump grease into the fittings until grease begins to ooze out of the bearings.
4. Wipe up any excess grease.

Where to Add Grease

Lubricate the grease fittings as shown on the CHECK SERVICE REFERENCE AID decal (Fig. 22).

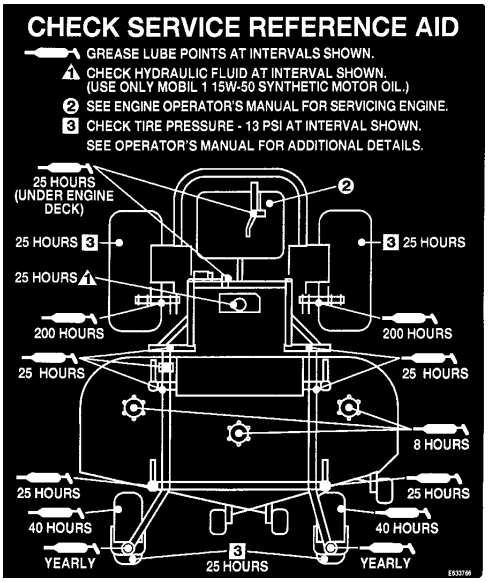

Figure 22

Cleaning the Cooling Systems

Before each use, check and clean cooling screen. Remove any build–up of grass, dirt or other debris from the oil cooler screen and engine air intake. Every 100 hours clean oil cooler, engine cylinder and cylinder head cooling fins. Also clean around carburetor, governor levers and linkage. This will help insure adequate cooling to hydraulic pumps, motors and engine and will reduce the possibility of overheating and mechanical damage.

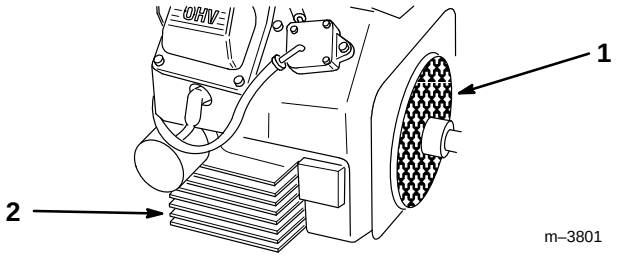

Figure 23

1. Engine screen
2. Oil cooler

Tire Pressure

Maintain the air pressure in the front and rear tires as specified. Uneven tire pressure can cause uneven cut. Check the pressure at the valve stem after every 50 operating hours or monthly, whichever occurs first (Fig. 24). Check the tires when they are cold to get the most accurate pressure reading.

Pressure: 13 psi (90 kPa) drive wheels and castor wheels.

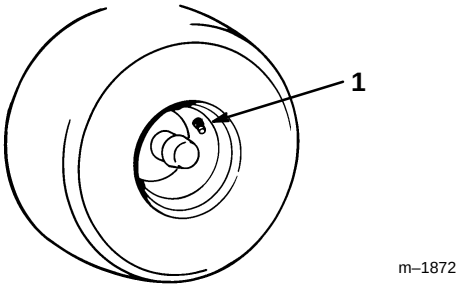

Figure 24

1. Valve stem

Fuel Filter

Replace the fuel filter after every 200 operating hours or yearly, whichever occurs first.

Replacing the Fuel Filter

Never install a dirty filter if it is removed from the fuel line.

1. Disengage the power take off (PTO), set the parking brake, and turn the ignition key to “OFF” to stop the engine. Remove the key.

2. Close fuel shut–off valve on console.

3. Squeeze the ends of the hose clamps together and slide them away from the filter (Fig. 25).

4. Remove the filter from the fuel lines.

5. Install a new filter and move the hose clamps close to the filter (Fig. 26).

6. Open fuel shut-off valve on console.

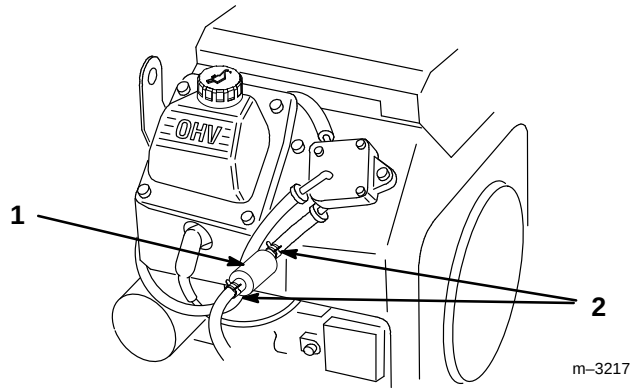

Figure 25

1. Filter
2. Hose clamp

Fuel Tank

Draining The Fuel Tank

⚠ DANGER

POTENTIAL HAZARD
- **In certain conditions gasoline is extremely flammable and highly explosive.**

WHAT CAN HAPPEN
- **A fire or explosion from gasoline can burn you, others, and cause property damage.**

HOW TO AVOID THE HAZARD
- **Drain gasoline from the fuel tank when the engine is cold. Do this outdoors in an open area. Wipe up any gasoline that spills.**
- **Never drain gasoline near an open flame or where gasoline fumes may be ignited by a spark.**
- **Never smoke a cigarette, cigar or pipe.**

1. Park the machine on a level surface, to assure fuel tank drains completely. Then disengage the power take off (PTO), set the parking brake, and turn the ignition key to “OFF” to stop the engine. Remove the key.

2. Close fuel shut–off valve (Fig. 26).

3. Loosen the hose clamp at the fuel filter and slide it up the fuel line away from the fuel filter (Fig. 26).

4. Pull the fuel line off fuel filter (Fig. 26). Open fuel shut-off valve and allow gasoline to drain into a gas can or drain pan.

Note: Now is the best time to install a new fuel filter because the fuel tank is empty.

5. Install the fuel line onto the fuel filter. Slide the hose clamp close to the fuel filter to secure the fuel line (Fig. 26).

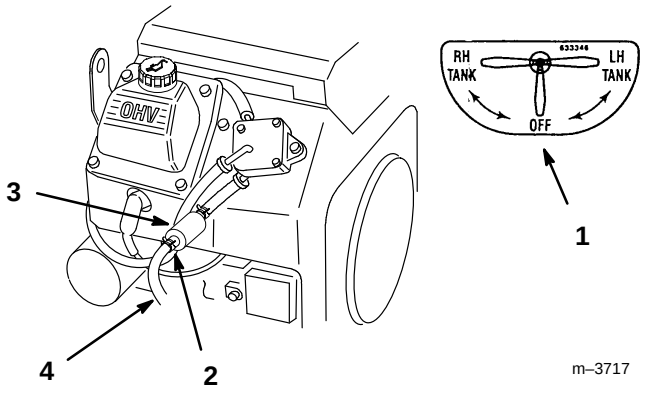

Figure 26

1. Fuel shut-off valve
2. Fuel filter
3. Hose clamp
4. Fuel line

Hydraulic System

Checking the Hydraulic Fluid

Check the hydraulic fluid level before engine is first started and after every 25 operating hours.

Fluid Type: Mobil 1 15W–50 synthetic motor oil.

IMPORTANT: Use only oil specified. Other fluids could cause system damage.

Tank Capacity: 2.1 qt. (2.0 l)

1. Position machine on a level surface and stop the engine and set the parking brake.
2. Clean area around filler neck of hydraulic tank (Fig. 27).
3. Remove cap from filler neck and look inside to check fluid level. Fluid level should be above the baffle inside the tank (Fig. 27).
4. If level is low, add fluid to raise level to above the baffle (Fig. 27).
5. Install cap on filler neck.

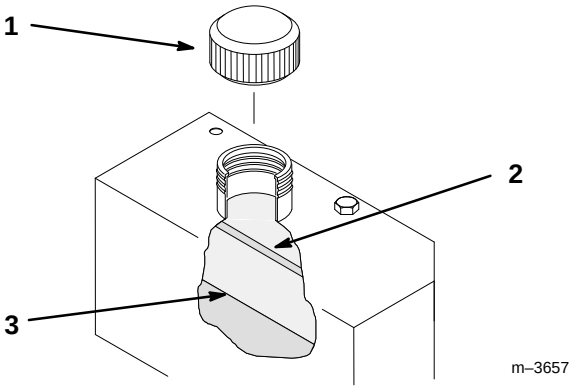

Figure 27

1. Cap
2. Baffle
3. Fluid level-Full

⚠ WARNING

POTENTIAL HAZARD
- **Hydraulic fluid escaping under pressure can penetrate skin and cause injury.**

WHAT CAN HAPPEN
- **Fluid accidentally injected into the skin must be surgically removed within a few hours by a doctor familiar with this form of injury or gangrene may result.**

HOW TO AVOID THE HAZARD
- **Keep body and hands away from pin hole leaks or nozzles that eject high pressure hydraulic fluid.**
- **Use cardboard or paper to find hydraulic leaks.**

Replacing the Hydraulic Filter

Change the hydraulic filter:

- After the first 8 operating hours.
- After every 200 operating hours.

1. Position machine on a level surface, stop the engine, and remove key from ignition switch.

   IMPORTANT: Do not substitute automotive oil filter or severe hydraulic system damage may result.

2. Remove hydro cap and temporarily cover opening with a plastic bag and rubber band to prevent all hydro fluid from draining out.

3. Place drain pan under filter, remove the old filter and wipe the filter adapter gasket surface clean (Fig. 28).

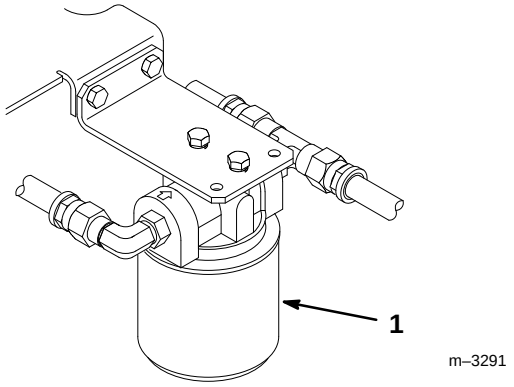

Figure 28

1. Hydraulic filter

4. Apply a thin coat hydro fluid to the rubber gasket on the replacement filter (Fig. 29).

5. Install replacement hydraulic filter onto the filter adapter. Do not tighten.

6. Remove plastic bag from tank opening and allow filter to fill with hydro fluid.

7. When fluid overflows filter turn the oil filter clockwise until the rubber gasket contacts the filter adapter, then tighten the filter an additional 1/2 turn (Fig. 29).

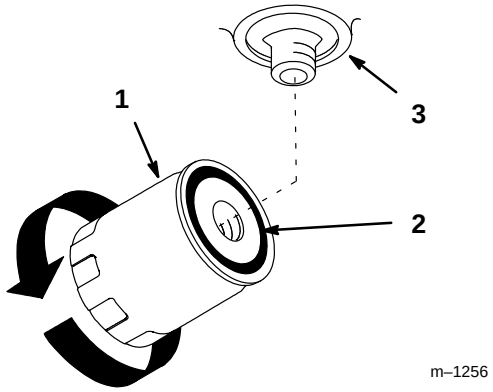

Figure 29

1. Hydraulic filter
2. Gasket
3. Adapter

8. Clean up any spilled fluid.

9. Start engine and let run for about two minutes to purge air from the system. Stop the engine and check for leaks. If one or both wheels will not drive, refer Bleeding Hydraulic System, page 33.

10. Check fluid level in hydraulic tank and add to raise level to cover bottom of baffle. DO NOT OVER FILL.

Bleeding Hydraulic System

The traction system is self bleeding, however, it may be necessary to bleed the system if fluid is changed or after work is performed on the system.

1. Raise rear of the machine so wheels are off the ground and support with jack stands.

2. Start the engine and run at idle speed. Engage traction on one side and spin the wheel by hand.

3. When the wheel begins to spin on its own, keep it engaged until wheel drives smoothly. (minimum 2 minute)

4. Check hydraulic fluid level as it drops and add as required to maintain proper level.

5. Repeat procedure on opposite wheel.

Check Hydraulic Lines

After every 100 operating hours, check hydraulic lines and hoses for leaks, loose fittings, kinked lines, loose mounting supports, wear, weather and chemical deterioration. Make necessary repairs before operating.

⚠ WARNING

POTENTIAL HAZARD

- **Hydraulic fluid escaping under pressure can penetrate skin and cause injury.**

WHAT CAN HAPPEN

- **Fluid accidentally injected into the skin must be surgically removed within a few hours by a doctor familiar with this form of injury or gangrene may result.**

HOW TO AVOID THE HAZARD

- **Keep body and hands away from pin hole leaks or nozzles that eject high pressure hydraulic fluid.**
- **Use cardboard or paper to find hydraulic leaks.**

Adjusting Motion Controls

If motion control levers do not align, or move easily into the console notch, adjustment is required. Adjust each lever, spring and rod separately.

1. Stop engine, remove ignition key and tilt seat forward.
2. Begin with either the left or right motion control lever. Move lever to the neutral position and pull lever back until the clevis pin (on arm below pivot shaft) contacts the end of the slot (just beginning to put pressure on spring) (Fig. 30).
3. Check where lever is relative to notch in console (should be centered allowing lever to pivot outward to the neutral lock position) (Fig. 30).
4. If adjustment is needed, loosen the nut against the yoke and while applying slight rearward pressure on the motion control lever, turn the head of the adjustment bolt in the appropriate direction until lever is centered (keeping rearward pressure on the lever will keep the pin at the end of the slot and allow the adjustment bolt to move the lever to the appropriate position). Tighten lock nut.
5. Repeat on opposite side of unit.

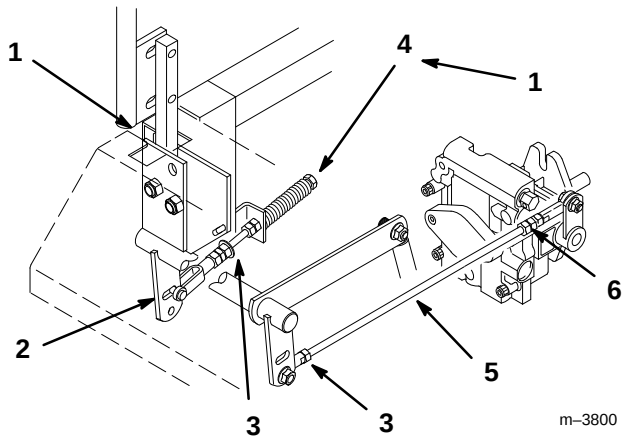

Figure 30

1. Neutral lock position
2. Clevis pin in slot
3. Nut
4. Bolt
5. Pump rod
6. Double nuts

6. This adjustment must be made with drive wheels turning. First raise the frame and block up so drive wheels can rotate freely.

7. Start engine, open throttle 1/2 way and release parking brake. Refer to Starting and Stopping the Engine, page 17.

8. The reverse indicator spring must be correct before the following adjustment can be made (see step 1).

9. Slide seat forward, remove prop rod and tilt seat fully forward.

10. Remove electrical connector from the seat safety switch. ***Temporarily*** install a jumper wire across terminals in the connector of wiring harness.

11. Loosen locknut at ball joint on pump control rod (Fig. 30).

    Note: The front nut of each rod has left–hand threads.

12. Adjust pump rod length by rotating double nuts on rod, in the appropriate direction, until wheel is still or slightly creeps in reverse (Fig. 30).

13. Move motion control lever forward and reverse, then back to neutral. Wheel must stop turning or slightly creep in reverse.

    Note: Motion control lever must be in neutral while making any adjustments.

14. Open throttle to fast. Make sure wheel remains stopped or slightly creeps in reverse, re-adjust if necessary.

15. Repeat on opposite side of unit. Tighten locknuts against ball joints.

16. Shut off unit. Remove jumper wire from wire harness connector and plug connector into seat switch.

17. Reinstall prop rod and lower seat.

Replacing the Pump Drive Belt

Check pump drive belt for wear after every 50 hours of operation.

1. Pull spring loaded idler down and remove traction belt from the engine and hydro pump pulleys (Fig. 31). Remove belt between pulleys.

2. Install new belt around engine and hydro pump pulleys (Fig. 31).

3. Pull spring loaded idler down and align below traction belt. Release pressure on spring loaded idler (Fig. 31).

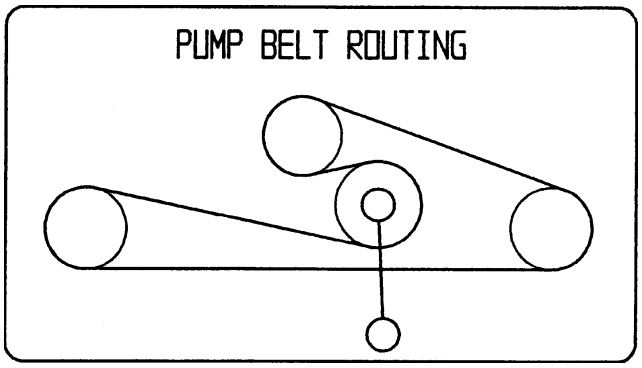

Figure 31

Adjustment Parking Brake

Check parking brake for adjusted properly.

1. Disengage brake lever (lever down).

2. Measure the length of the spring. Measurement should be 2.9” (74 mm) between washers (Fig. 32).

3. If adjustment is necessary, loosen the jam nut below the spring and tighten the nut directly below the yoke (Fig. 32). Turn the nut until the correct measurement is obtained. Tighten the two nuts together and repeat on opposite side of unit.

4. Turn nuts clockwise to shorten spring length and turn counter–clockwise to lengthen the spring.

5. Engage parking brake, lever up.

6. Measure the distance between the trunnion roller and the collar on brake rod . Measurement should be 3/16”–1/4” (5–7 mm) (Fig. 32).

7. If adjustment is necessary, loosen the jam nut directly below the yoke. Turn the bottom rod until the correct measurement is obtained (Fig. 32). Tighten jam nut at yoke

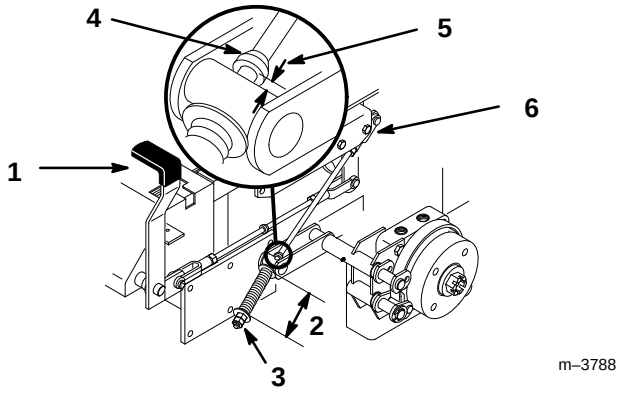

Figure 32

1. Brake lever
2. Spring 2.9” (74 mm)
3. Adjusting nuts
4. Collar on brake rod
5. 3/16”–1/4’ (5–7 mm)
6. Jam nut and yoke

Fuse

Service Interval/Specification

The electrical system is protected by fuses. It requires no maintenance, however, if a fuse blows check component/circuit for malfunction or short.

Fuse: Main F1–20 amp, blade-type
Alternator F2–20 amp, blade-type

1. Raise the seat to gain access to fuse holder (Fig. 33).

2. To replace fuses pull out on the fuse to remove it (Fig. 33).

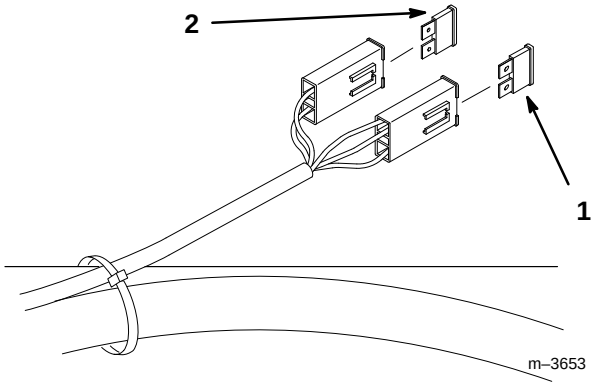

Figure 33

1. Main-30 amp
2. Alternator-25 amp

Battery

Check the electrolyte level in the battery every 25 hours. Always keep the battery clean and fully charged. Use a paper towel to clean the battery case. If the battery terminals are corroded, clean them with a solution of four parts water and one part baking soda. Apply a light coating of grease to the battery terminals to prevent corrosion.

Voltage: 12 v

Checking Electrolyte Level

1. Open covers to see into the cells. The electrolyte must be up to the lower part of the tube (Fig. 34). Do not allow the electrolyte to get below the plates. (Fig. 34).

2. If the electrolyte is low, add the required amount of distilled water; refer to Adding Water to the Battery, page 37.

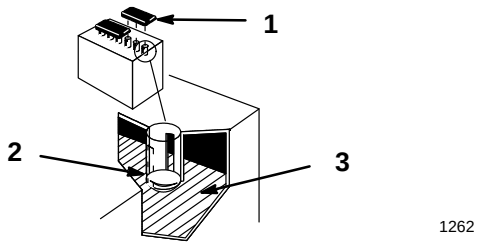

Figure 34

1. Filler caps
2. Lower part of tube
3. Plates

Adding Water to the Battery

The best time to add distilled water to the battery is just before you operate the machine. This lets the water mix thoroughly with the electrolyte solution.

1. Clean the top of the battery with a paper towel.

2. Lift off the filler caps (Fig. 34).

3. Slowly pour distilled water into each battery cell until the level is up to the lower part of the tube (Fig. 34).

   IMPORTANT: Do not overfill the battery because electrolyte (sulfuric acid) can cause severe corrosion and damage to the chassis.

4. Press the filler caps onto the battery.

Charging the Battery

IMPORTANT: Always keep the battery fully charged (1.260 specific gravity). This is especially important to prevent battery damage when the temperature is below 32°F (0°C).

1. Check the electrolyte level; refer to Checking Electrolyte Level, page 37.

2. Remove the filler caps from the battery and connect a 3 to 4 amp battery charger to the battery posts. Charge the battery at a rate of 4 amperes or less for 4 hours (12 volts). Do not overcharge the battery. Install the filler caps after the battery is fully charged.

⚠ WARNING

POTENTIAL HAZARD
- **Charging the battery produces gasses.**

WHAT CAN HAPPEN
- **Battery gasses can explode.**

HOW TO AVOID THE HAZARD
- **Keep cigarettes, sparks and flames away from battery.**

Wiring Diagram

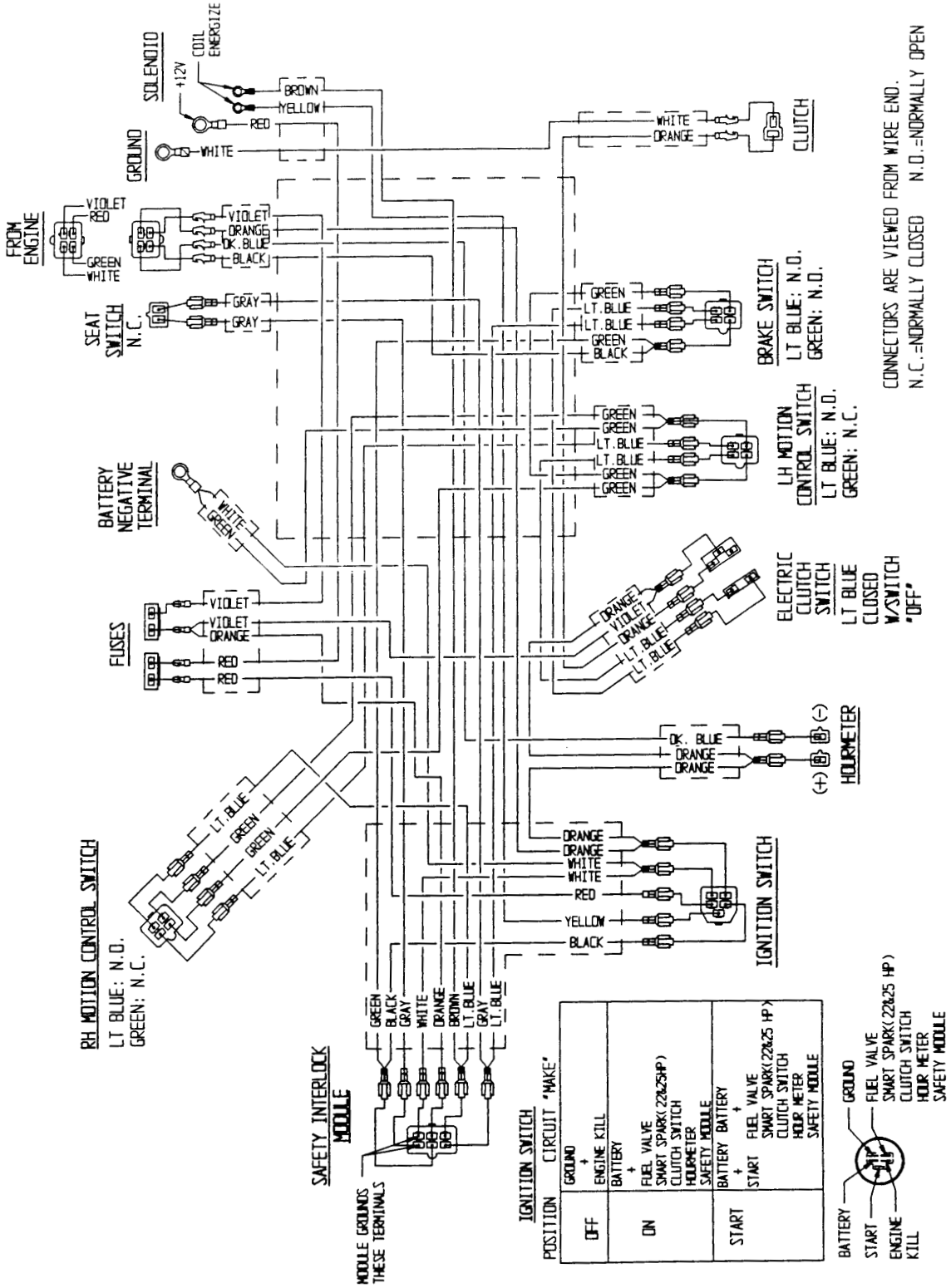

Cleaning and Storage

1. Disengage the power take off (PTO), set the parking brake and turn the ignition key to “OFF” to stop the engine. Remove the key.

2. Remove grass clippings, dirt, and grime from the external parts of the entire machine, especially the engine. Clean dirt and chaff from the outside of the engine’s cylinder head fins and blower housing.

   IMPORTANT: You can wash the machine with mild detergent and water. Do not pressure wash the machine. Avoid excessive use of water, especially near the control panel, engine, hydraulic pumps and motors.

3. Service the air cleaner; refer to Air Cleaner, page 25.

4. Grease and oil the machine; refer to Greasing and Lubrication, page 29.

5. Change the crankcase oil; refer to Engine Oil, page 26.

6. Change the hydraulic fluid; refer to Hydraulic System, page 32.

7. Remove the spark plug(s) and check its condition; refer to Spark Plug, page 28. With the spark plug(s) removed from the engine, pour two tablespoons of engine oil into the spark plug hole. Now use the starter to crank the engine and distribute the oil inside the cylinder. Install the spark plug(s). Do not install the wire on the spark plug(s).

8. Check the tire pressure; refer to Tire Pressure, page 30.

9. Charge the battery; refer to Battery page 37.

10. For long-term storage (more than 90 days) add stabilizer/conditioner additive to fuel in the tank (1 oz. per gallon).

    A. Run engine to distribute conditioned fuel through the fuel system (5 minutes).

    B. Stop engine, allow to cool and drain the fuel tank; refer to Fuel Tank, page 31.

    C. Restart engine and run until it stops. Repeat, on “CHOKE” until engine will not restart.

    D. Dispose of fuel properly. Recycle as per local codes.

    Note: Do not store stabilizer/conditioned gasoline over 90 days.

11. Check and tighten all bolts, nuts, and screws. Repair or replace any part that is damaged or defective.

12. Paint all scratched or bare metal surfaces. Paint is available from your Authorized Service Dealer.

13. Store the machine in a clean, dry garage or storage area. Remove the key from the ignition switch and keep it in a memorable place. Cover the machine to protect it and keep it clean.

Troubleshooting

PROBLEM	POSSIBLE CAUSES	CORRECTIVE ACTION
Starter does not crank	1. Blade control (PTO) is ENGAGED. 2. Parking brake is not on. 3. Operator is not seated. 4. Battery is dead. 5. Electrical connections are corroded or loose. 6. Fuse is blown. 7. Relay or switch is defective.	1. Move blade control (PTO) to DISENGAGED. 2. Set parking brake. 3. Sit on the seat. 4. Charge the battery. 5. Check electrical connections for good contact. 6. Replace fuse. 7. Contact Authorized Service Dealer.
Engine will not start, starts hard, or fails to keep running.	1. Fuel tank is empty. 2. Fuel valve turned off. 3. Choke is not ON. 4. Air cleaner is dirty. 5. Spark plug wires is loose or disconnected. 6. Spark plugs are pitted, fouled, or gap is incorrect. 7. Dirt in fuel filter. 8. Dirt, water, or stale fuel is in fuel system.	1. Fill fuel tank with gasoline. 2. Open fuel valve. 3. Move choke lever to ON. 4. Clean or replace air cleaner element. 5. Install wires on spark plug. 6. Install new, correctly gapped spark plugs. 7. Replace fuel filter. 8. Contact Authorized Service Dealer.
Engine loses power.	1. Engine load is excessive. 2. Air cleaner is dirty. 3. Oil level in crankcase is low. 4. Cooling fins and air passages under engine blower housing are plugged. 5. Spark plugs are pitted, fouled, or gap is incorrect. 6. Vent in fuel cap is closed. 7. Dirt in fuel filter. 8. Dirt, water, or stale fuel is in fuel system.	1. Reduce ground speed. 2. Clean air cleaner element. 3. Add oil to crankcase. 4. Remove obstruction from cooling fins and air passages. 5. Install new, correctly gapped spark plugs. 6. Open vent in fuel cap. 7. Replace fuel filter. 8. Contact Authorized Service Dealer.

PROBLEM	POSSIBLE CAUSES	CORRECTIVE ACTION
Engine overheats.	1. Engine load is excessive. 2. Oil level in crankcase is low. 3. Cooling fins and air passages under engine blower housing are plugged.	1. Reduce ground speed. 2. Add oil to crankcase. 3. Remove obstruction from cooling fins and air passages.
Abnormal vibration.	1. Engine mounting bolts are loose. 2. Loose engine pulley, idler pulley, or blade pulley. 3. Engine pulley is damaged.	1. Tighten engine mounting bolts. 2. Tighten the appropriate pulley. 3. Contact Authorized Service Dealer.
Machine does not drive.	1. Traction belt is worn, loose or broken. 2. Traction belt is off pulley. 3. Hydro fluid level low.	1. Contact Authorized Service Dealer. 2. Contact Authorized Service Dealer. 3. Add hydro fluid to reservoir.

LCG

THE TORO TOTAL COVERAGE GUARANTEE

A One-Year Limited Warranty
(A Two-Year Full Warranty for Residential Use)

What Is Covered By This Express Warranty?

The Toro Company promises to repair any TORO Product used for commercial, institutional, or rental purposes if defective in materials or workmanship for a period of one year from the date of purchase. The cost of parts and labor are included, but the customer pays the transportation cost. Transportation within a 15-mile radius of a TORO ProLine Service Dealer is covered under this warranty for Riding Products, Mid-size Mowers and Turf Maintenance Equipment.

What Products Are Covered By This Warranty?

The following products and their attachments are covered by this warranty:

- Z-Master Zero Radius Tractors
- ProLine Mid-size Mowers
- Groundsmaster Riding Mowers
- ProLine Hand-held Gas Products
- Backpack Blowers
- Commercial WPM
- Turf Maintenance Equipment
- Debris Management Equipment

How About Residential Use?

TORO Products used for residential use are covered by a full two-year warranty.

How Do You Get Warranty Service?

Should you feel your TORO Product contains a defect in materials or workmanship, contact the dealer who sold you the product or any TORO ProLine Service Dealer. The Yellow Pages of your telephone directory is a good reference source; look under TORO Commercial Service Dealers. The Service Dealer will either arrange service at his/her dealership or recommend another authorized Service Dealer who may be more convenient. You may need proof of purchase (copy of registration card, sales receipt, etc.) for warranty validation.

If for any reason you are dissatisfied with a Service Dealer's analysis of the defect in materials or workmanship or if you need a referral to a TORO ProLine Service Dealer, please feel free to contact us at the following address:

Toro Customer Service Department
8111 Lyndale Avenue South
Bloomington, MN 55420–1196
612–888–8801 or 800–348–2424

What Must You Do To Keep The Warranty In Effect?

You must maintain your TORO Product by following the maintenance procedures described in the operator's manual. Such routine maintenance, whether performed by a dealer or by you, is at your expense.

What Does This Warranty Not Cover? and How Does Your State Law Relate To This Warranty?

There is no other express warranty except for special emission system coverage on some products and as described above. This express warranty does not cover:

- Cost of regular maintenance service or parts, such as filters, fuel, lubricants, tune-up parts, blade sharpening, brake and clutch adjustments.
- Any product or part which has been altered or misused or required replacement or repair due to normal wear, accidents, or lack of proper maintenance.
- Repairs necessary due to improper fuel, contaminants in the fuel system, or failure to properly prepare the fuel system prior to any period of non-use over three months.
- Pickup and delivery charges for distances beyond a 15-mile radius from a TORO ProLine Service Dealer.

All repairs covered by this warranty must be performed by a TORO Service Dealer using Toro approved replacement parts.

The Toro Company is not liable for indirect or consequential damages in connection with the use of the TORO Products covered by this warranty, including any cost or expense of providing substitute equipment or service during reasonable periods of malfunction or non-use pending completion of repairs under this warranty. Some states do not allow exclusions of incidental or consequential damages, so the above exclusion may not apply to you.

This warranty gives you specific legal rights, and you may also have other rights which vary from state to state.

COUNTRIES OTHER THAN THE UNITED STATES OR CANADA

Customers who have purchased TORO products exported from the United States or Canada should contact their TORO Distributor (Dealer) to obtain guarantee policies for your country, province, or state. If for any reason you are dissatisfied with your Distributor's service or have difficulty obtaining guarantee information, contact the TORO importer. If all other remedies fail, you may contact us at The Toro Company.

Rev 6/18/97