FORM NO. 3321–288

TORO®

ProLine BP6900
Backpack Blower

Model No. 53047–8900001 & Up

Operator’s Manual

⚠ WARNING: ⚠

The engine exhaust from this product contains chemicals known to the State of California to cause cancer, birth defects, or other reproductive harm.

Contents

	Page
Introduction	1
Safety	2
Assembly	3
Before Starting	3
Mix Gasoline And Oil (Fig. 5)	3
Operation	4
Throttle Lever	4
Starting Engine	4
Stopping Engine	4
Operating Blower	5
Maintenance	5
Periodic Maintenance Chart	5
Servicing Air Filter	6
Replacing Spark Plug	6
Servicing Fuel Filter	6
Cleaning the Cooling Fins	6
Servicing the Muffler and Exhaust Ports	7
Adjusting Idle Speed	7
Storage	7
Emission Control Information	7
Fuel Information	7
Emission Control Information	7
Exhaust Emission Control System (EM)	7
Maintenance and Warranty	7
Tampering with Emission Control System Prohibited	8
Figures	9
Federal and California Emission Control Warranty Statement	13
Warranty	16

Introduction

Thank you for purchasing a Toro product.

All of us at Toro want you to be completely satisfied with your new product, so feel free to contact your local Authorized Service Dealer for help with service, genuine Toro parts, or other information you may require.

Whenever you contact your Authorized Service Dealer or the factory, always know the model and serial numbers of your product. These numbers will help the Service Dealer or Service Representative provide exact information about your specific product. You will find the model and serial number decal located in a unique place on the product (Fig. 6).

For your convenience, write the product model and serial numbers in the space below.

Model No: _____

Serial No. _____

Read this manual carefully to learn how to operate and maintain your product correctly. Reading this manual will help you and others avoid personal injury and damage to the product. Although Toro designs, produces and markets safe, state-of-the-art products, you are responsible for using the product properly and safely. You are also responsible for training persons who you allow to use the product about safe operation.

The Toro warning system in this manual identifies potential hazards and has special safety messages that help you and others avoid personal injury, even death. DANGER, WARNING and CAUTION are signal words used to identify the level of hazard. However, regardless of the hazard, be extremely careful.

DANGER signals an extreme hazard that will cause serious injury or death if the recommended precautions are not followed.

WARNING signals a hazard that may cause serious injury or death if the recommended precautions are not followed.

CAUTION signals a hazard that may cause minor or moderate injury if the recommended precautions are not followed.

Two other words are also used to highlight information. “Important” calls attention to special mechanical information and “Note” emphasizes general information worthy of special attention.

The left and right side of the machine is determined by standing behind the handle in the normal operator’s position.

Safety

Read and understand this Operator’s Manual before using the backpack blower. Be thoroughly familiar with the proper use of the backpack blower.

Never allow children to operate the backpack blower. It is not a toy. Never allow adults to operate the unit without first reading the Operator’s Manual.

Become familiar with the controls and know how to stop the engine quickly.

Always use eye protection and ear protection.

Keep the area of operation clear of all persons, particularly small children, and pets.

Do not point blower nozzle in the direction of people or pets.

Never operate the backpack blower when you are fatigued.

Never operate the backpack blower without proper guards or other protective safety devices in place.

Dress properly; do not wear loose clothing or jewelry that can be caught in moving parts. Always wear substantial footwear, long pants, and a long-sleeved shirt.

Gasoline is highly flammable; handle it carefully.

- Do not smoke while handling gasoline.
- Use an approved fuel container for storing the gasoline/oil mixture.
- Do not fill the fuel tank when the engine is hot or running.
- Fill the fuel tank outdoors and only up to one-half inch from the top of the tank. Do not fill the filler neck.
- Wipe away any spilled gasoline before starting the engine.

Always be sure of your footing; keep a firm hold of the blower pipes, and walk, never run, while operating the backpack blower.

Use the correct accessories. Do not use the backpack blower for any job except that for which it is intended.

Keep all fasteners tight and be sure the backpack blower is in safe working condition. Follow the maintenance instructions in this manual.

Do not put hands or feet near or under the rotating parts. Keep clear at all times.

If the backpack blower should start to vibrate abnormally, stop the engine immediately and check for the cause. Vibration is generally a warning of trouble.

Avoid using the backpack blower near rocks, gravel, stones, and similar matter to avoid dangerous flying debris. Use the backpack blower only in daylight or good artificial light.

Do not allow bystanders in work area.

Do not operate without guard(s) in place.

Do not operate in unventilated area.

Assembly

1. Locate and identify all the components (Fig. 1)

2. Using the bands, connect the flexible pipe to the blower, and the swivel pipe to the flexible pipe (Fig. 6).

3. Assemble the straight pipe and bent pipe. Then connect them to the swivel pipe (Fig. 6).

Before Starting

⚠ DANGER

POTENTIAL HAZARD
- **In certain conditions gasoline is extremely flammable and highly explosive.**

WHAT CAN HAPPEN
- **A fire or explosion from gasoline can burn you, others, and cause property damage.**

HOW TO AVOID THE HAZARD
- **Use a funnel and fill the fuel tank outdoors, in an open area, when the engine is cold. Wipe up any gasoline that spills.**
- **Do not fill the fuel tank completely full. Add gasoline to the fuel tank until the level is 1/4" to 1/2" (6 mm to 13 mm) below the bottom of the filler neck. This empty space in the tank allows gasoline to expand.**
- **Never smoke when handling gasoline, and stay away from an open flame or where gasoline fumes may be ignited by a spark.**
- **Store gasoline in an approved container and keep it out of the reach of children.**
- **Never buy more than a 30-day supply of gasoline.**

Mix Gasoline And Oil (Fig. 5)

Use clean, fresh lead-free gasoline, including *oxygenated* or *reformulated* gasoline, with an octane rating of 87 or higher. To ensure freshness, purchase only the quantity of gasoline that can be used in 30 days. Use of lead-free gasoline results in fewer combustion chamber deposits and longer spark plug life. Use of premium grade fuel is not necessary or recommended.

1. APPROVED OIL—For simplicity and best engine performance, mix the contents of one 5.2–ounce bottle of Toro 50:1 Two–Cycle Oil with two gallons of fresh, unleaded regular gasoline. Leaded regular gasoline may be used if unleaded regular is not available.

   Toro Two–Cycle Oil is specially formulated to provide superior lubrication, make starting easy, and prolong engine life. If Toro Two–Cycle Oil is not available, mix two gallons of gasoline and 5.2 ounces of another high grade two–cycle oil that is specially formulated for high-performance, two-cycle air-cooled engines.

   NEVER USE AUTOMOTIVE OIL (i.e. SAE 30, 10W30 etc.), TWO–CYCLE OIL THAT IS CERTIFIED NMMA OR BIA, OR THE WRONG MIX RATIO BECAUSE THE ENGINE CAN BE DAMAGED, AND IT WOULD NOT BE COVERED BY THE TORO WARRANTY.

2. Mixing Gasoline and Oil—Pour a half gallon of gasoline into an approved gasoline container (preferably plastic, not metal) and add the correct amount of two–cycle oil. Reinstall cap on gasoline container and shake the container to mix oil and gas thoroughly. Remove cap and add remaining amount of gasoline.

   Toro also recommends that Toro Stabilizer/Conditioner be used regularly in all Toro gasoline powered products during operation and storage seasons. Toro Stabilizer/Conditioner cleans the engine during operation and prevents gum–like varnish deposits from forming in the engine during periods of storage.

IMPORTANT: NEVER USE METHANOL, GASOLINE CONTAINING METHANOL, GASOHOL CONTAINING MORE THAN 10% ETHANOL, PREMIUM GASOLINE, OR WHITE GAS BECAUSE THE ENGINE AND FUEL SYSTEM COULD BE DAMAGED.

DO NOT USE FUEL ADDITIVES OTHER THAN THOSE MANUFACTURED FOR FUEL STABILIZATION DURING STORAGE SUCH AS TORO'S STABILIZER/CONDITIONER OR A SIMILAR PRODUCT. TORO'S STABILIZER/CONDITIONER IS A PETROLEUM DISTILLATE BASED CONDITIONER/STABILIZER. TORO DOES NOT RECOMMEND STABILIZERS WITH AN ALCOHOL BASE SUCH AS ETHANOL, METHANOL OR ISOPROPYL. ADDITIVES SHOULD NOT BE USED TO TRY TO ENHANCE THE POWER OR PERFORMANCE OF THE MACHINE.

Note: Do not mix gasoline and oil in the product fuel tank. Oil that is at room temperature mixes easier and more thoroughly than cold oil.

50:1 GAS/OIL Mixing Chart

U.S. GALLON	
Gasoline	**Oil**
1 gallon	2.6 oz.
1.5 gallons	3.9 oz.
2 gallons	5.2 oz.

Operation

See Figure 6 for the location of major backpack blower components.

Throttle Lever

Before operating the backpack blower, release the knob, rotate the throttle arm to the position in Figure 2, and tighten the knob.

When the backpack blower is positioned on the back of the operator, the throttle lever is located on the left side of the operator (Fig. 3).

The lowest position of the throttle lever is the "IDLE" setting, and the highest position is the "FULL THROTTLE" setting (Fig. 4).

Starting Engine

1. Pump the primer bulb on the side of the carburetor until you see fuel flowing through the fuel-return line (Fig. 7).

2. Move the choke lever fully downward to the closed position (Fig. 8). If the engine is already warm, only a partial or open (no choke) choke setting may be required.

3. Turn the stop switch ON (Fig. 9). (Confirm that the stop switch is in the START position.)

4. Set the throttle lever at 1/2 speed (Fig. 9).

5. Pull the starter grip briskly to start the engine (Fig. 10).

   Note: Only short pulls are necessary. Never pull the starter cord to its fullest extension. Never let go of the starter grip until it is at the fully returned position.

6. **Warming up the engine.** When the engine has started, slowly move the choke lever fully upward to the open position (Fig. 11). Allow the engine to warm up at less than 1/2 speed.

Stopping Engine

7. Always run the engine at idle speed for a few minutes to allow cooling before stopping.

8. To stop the engine, move the throttle control lever all the way downward to the engine idle position. Then move the stop switch to the STOP position (Fig. 9).

Operating Blower

⚠ WARNING

- **Never operate a backpack blower when you are fatigued.**
- **Never operate a backpack blower without proper guards or other protective safety devices in place.**

9. When the engine has warmed up, the backpack blower can be positioned on the back of the operator (Fig. 12).

10. When the backpack blower is positioned and ready for operation, adjust the throttle to a speed required to accomplish the task.

Maintenance

Periodic Maintenance Chart

Maintenance	Interval				
	Daily	First 20 Hours	Every 20 hours	Every 50 hours	Every 100 hours
Check and replenish fuel	●				
Check for fuel leakage	●				
Check bolts, nuts and screws for looseness and loss	●				
Clean fuel filter			●		
★ Clean air filter element			●		
Tighten bolts and nuts		●		●	
Clean spark plug and adjust electrode gap				●	
★ Remove dust and dirt from cylinder fins				●	
T Remove carbon deposits on piston head and inside cylinder				●	
T Remove carbon deposits in the exhaust pipe of muffler				●	
T Clean net of spark arrester (if equipped)				●	
T Check the sliding portion of the crankshaft, connecting rod, etc.					●
Fuel tube	Replace every 3 years.				

★ Service more frequently under dusty conditions.

T Service to be performed by an authorized Toro service dealer.

Note: The service intervals indicated are to be used as a guide. Service to be performed more frequently as necessitated by operating conditions.

⚠ CAUTION

POTENTIAL HAZARD
- **When wire is on spark plug, someone could accidentally start the engine.**

WHAT CAN HAPPEN
- **Accidental starting of engine could seriously injure you or other bystanders.**

HOW TO AVOID THE HAZARD
- **Pull wire off spark plug before you do any maintenance. Also push wire aside so it does not accidentally contact spark plug.**

Before each use, inspect the backpack blower for proper assembly and fitness of all components. Check all fasteners for correct tightness. Always inspect for fuel leaks.

⚠ DANGER

- **Do not attempt to start or operate a backpack blower that has a fuel leak. A fuel leak is a potential fire hazard that could cause a fire and personal injury.**

Servicing Air Filter

Inspect the air filter each time the backpack blower is used, or more often in extreme conditions.

1. To inspect, remove the air filter cover. Then remove the element from the case (Fig. 13).

2. Clean the felt air filter and the cover with compressed air (Fig. 14).

3. Wash the sponge air filter with a suitable cleaning solvent. Dry the sponge filter completely after washing.

Replacing Spark Plug

Remove plug after every 50 operating hours and check its condition. Replace spark plug every 100 operating hours or every season. Use a Champion RCJ7Y spark plug or equivalent.

1. Stop engine and wait for all moving parts to stop. Pull wire off spark plug.

2. Clean around spark plug and remove plug from cylinder head.

IMPORTANT: Replace a cracked, fouled, or dirty spark plug. Do not sand blast, scrape, or clean electrodes because engine damage could result from grit entering cylinder.

3. Set air gap at 0.024 – 0.028” (Fig. 15). Install correctly gapped spark plug and gasket seal. Tighten plug firmly to 10–12 ft–lb.

Servicing Fuel Filter

Clean and inspect the fuel filter for damage after every 20 hours of use. The fuel filter is attached to the fuel pick-up tube inside the fuel tank (Fig. 16). Loosen the clamp and remove the filter (Fig. 17).

1. To clean the fuel filter, remove it from the fuel tube and wash it with fuel mixture.

2. Inspect and clean the fuel tank before re-installing the fuel filter. Always replace a defective fuel filter.

Cleaning the Cooling Fins

Air must pass freely through the cylinder cooling fins to prevent poor engine performance and shortened engine life. Regularly check and clean all debris from the cooling fins by removing the engine cover (Fig. 18).

Servicing the Muffler and Exhaust Ports

The muffler must be removed and serviced after each 100 hours of use. The exhaust ports must be cleaned and inspected at the same time. Contact an authorized Toro dealer for this service.

Adjusting Idle Speed

Idle speed is the only available adjustment.

Do not tamper with the carburetor setting to increase the maximum engine speed.

If adjustment is needed, have it performed by your authorized Toro service dealer. Carburetor adjustments are made at the factory and are not adjustable without disassembling the carburetor.

Storage

For long-term storage of the backpack blower, first perform all regular maintenance procedures and needed repairs.

1. Empty the fuel tank. Disconnect the fuel-return line from the carburetor. Then gently hold the tickler lever down while pumping the primer bulb until fuel stops discharging from the fuel-return fitting.

2. Start the engine and allow it to run until it stops. Pull the starter cord a few times to remove any excess fuel from the engine.

3. Remove the spark plug and insert a small amount of oil into the cylinder. Slowly pull the starter cord and bring the piston to a position closest to the spark plug hole. Re-install the spark plug.

4. Apply a thin coating of oil to all the metal surfaces and store the backpack blower in a dry place.

Emission Control Information

Fuel Information

THIS ENGINE IS CERTIFIED TO OPERATE ON UNLEADED REGULAR GRADE GASOLINE ONLY. A minimum of 87 octane of the antiknock index is recommended. The antiknock index is posted on service station pumps in the USA.

Emission Control Information

To protect the environment in which we all live, Kawasaki has incorporated an exhaust emission control system (EM) in compliance with acceptable regulations of the California Air Resources Board.

Exhaust Emission Control System (EM)

The exhaust emission control system applied to this engine consists of a carburetor and an ignition system having optimum ignition timing characteristics.

The carburetor has been calibrated to provide lean air/fuel mixture characteristics and optimum fuel economy with a suitable air cleaner and exhaust system.

Maintenance and Warranty

Proper maintenance is necessary to ensure that your engine will continue to have low emission levels. This Operator’s Manual contains those maintenance recommendations for your engine. Those items identified in the Period Maintenance Chart are necessary to ensure compliance with the applicable standards.

The Toro Limited Emission Control System Warranty requires that you return your engine to an authorized Toro engine dealer for remedy under warranty. Please read the warranty carefully and keep it valid by complying with the owner’s obligations it contains.

Tampering with Emission Control System Prohibited

California State law prohibits the following acts or causing thereof: (1) the removal or rendering inoperative by any person other than for purposes of maintenance, repair, or replacement, of any device or element of design incorporated into any new engine for the purposes of emission control prior to its sale or delivery to the ultimate purchaser or while it is in use, or (2) the use of the engine after such device or element of design has been removed or rendered inoperative by any person.

Among those acts presumed to constitute tampering are the following acts:

Do not tamper with the original emission system related parts:

- Carburetor and internal parts
- Spark plug
- Magneto or electronic ignition system
- Fuel filter
- Air cleaner element

Figures

1

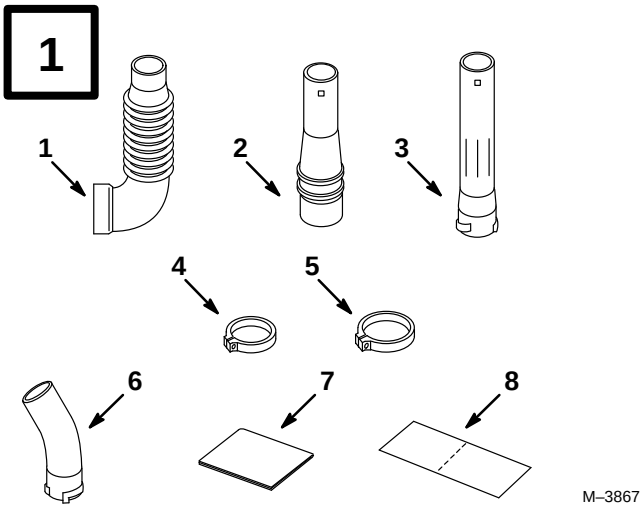

M–3867

1. Flexible pipe
2. Swivel pipe
3. Straight pipe (x 2)
4. Band – 3.0 in
5. Band – 4.25 in
6. Bent pipe
7. Operator's manual
8. Warranty registration card

2

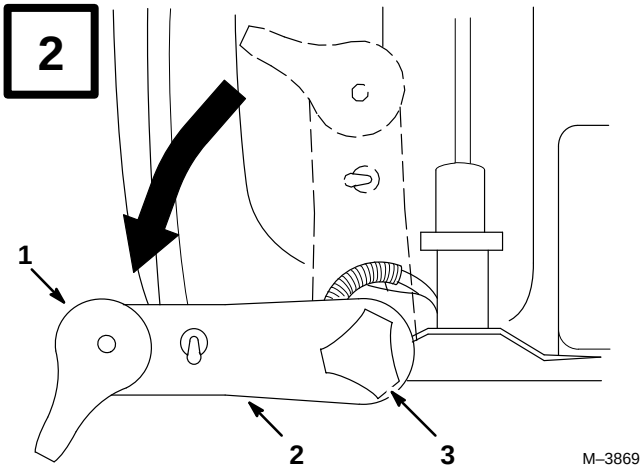

M–3869

1. Throttle lever
2. Throttle arm
3. Knob

3

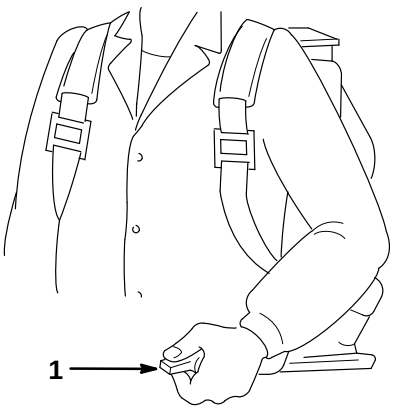

M–3870

1. Throttle lever

4

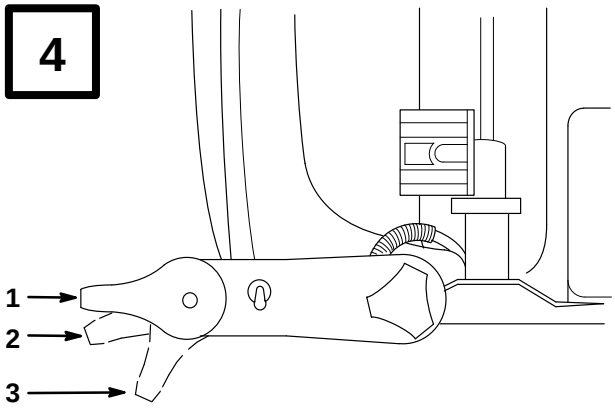

M–3871

1. Idle speed
2. Low speed
3. High speed

5

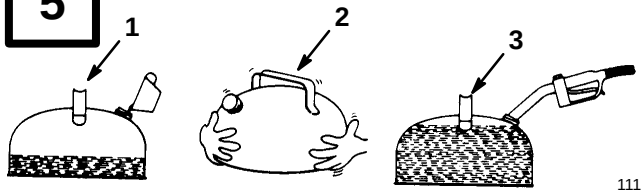

111

1. Add oil to small amount of gasoline
2. Install cap and shake can to mix
3. Add remaining amount of gasoline

6

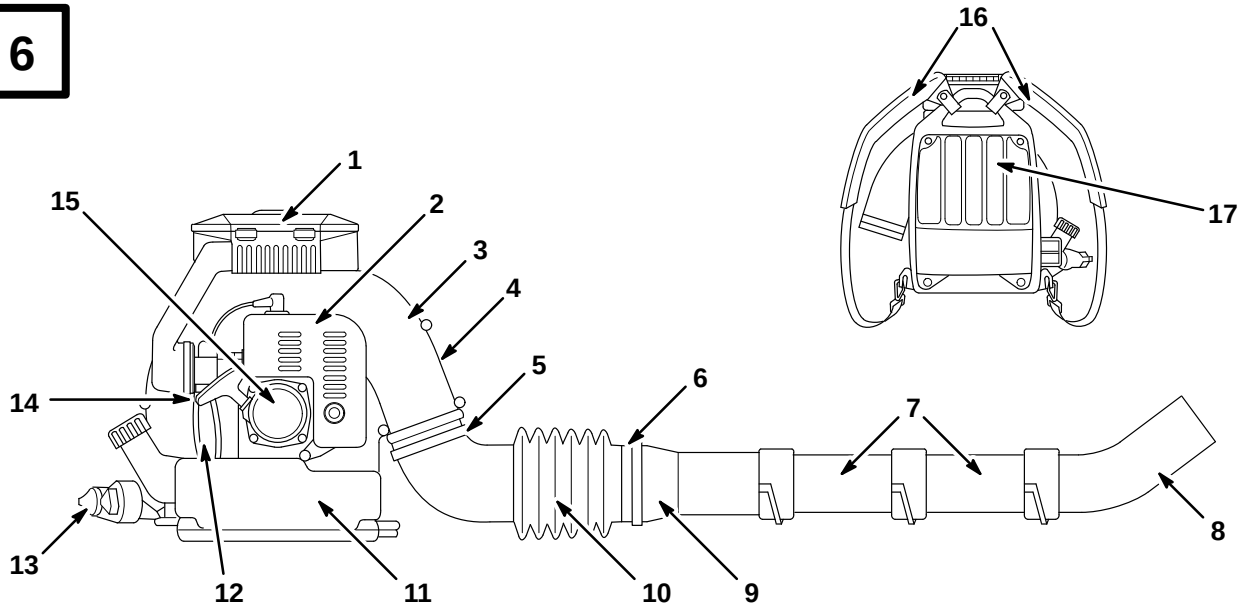

M–3868

1. Air cleaner
2. Engine
3. Blower housing
4. Model and serial number location
5. Band – 4.25 in
6. Band – 3.0 in
7. Straight pipe
8. Bent pipe
9. Swivel pipe
10. Flexible pipe
11. Fuel tank
12. Return pipe
13. Throttle lever
14. Primer bulb
15. Recoil starter
16. Shoulder straps
17. Back pad

7

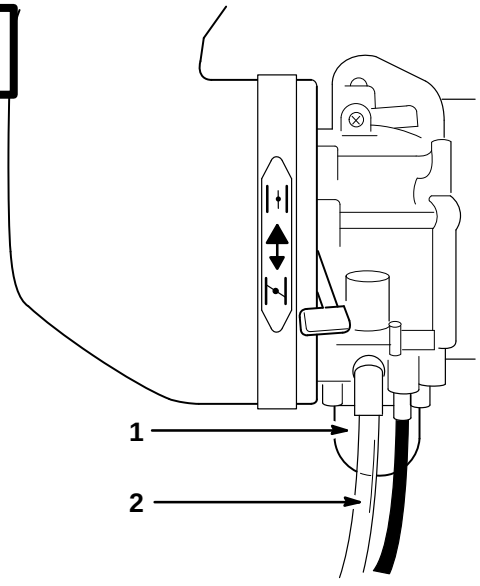

M–3872

1. Primer bulb
2. Fuel-line return

8

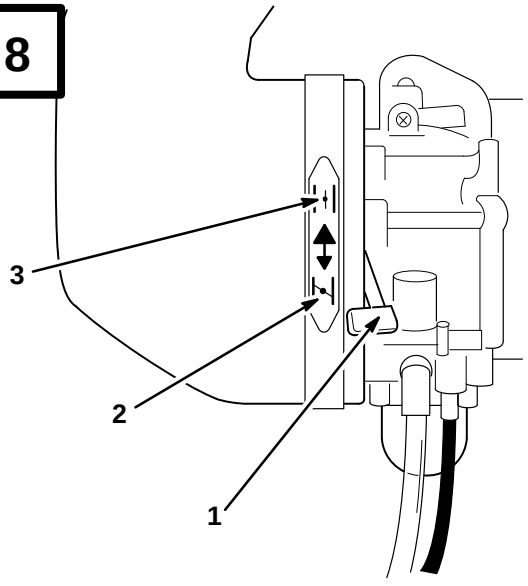

M–3872

1. Choke lever
2. Close position
3. Open position

9

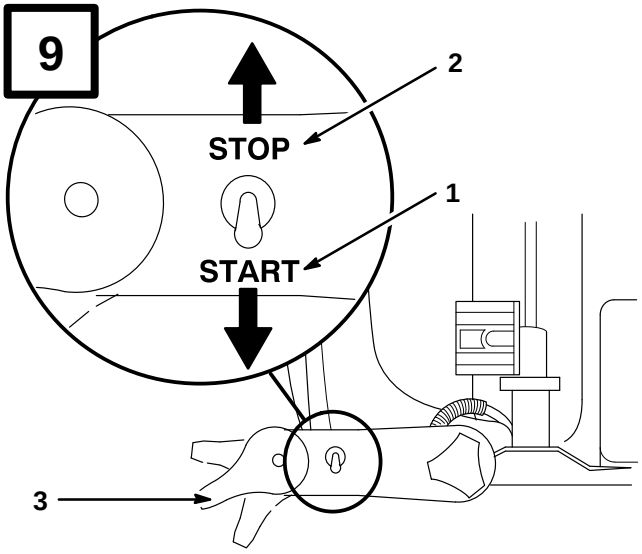

M–3874

1. Start position
2. Stop position
3. 1/2 speed position

10

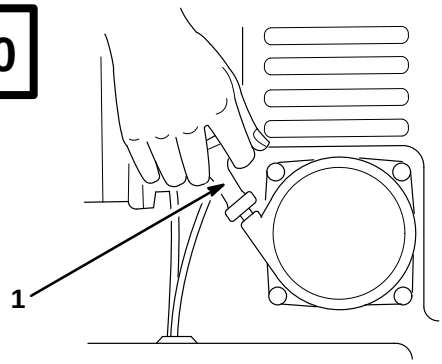

M–3875

1. Starter grip

11

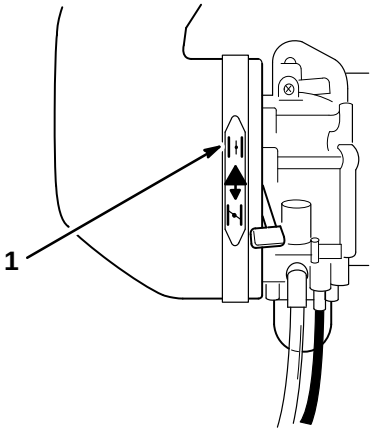

M–3872

1. Open position

12

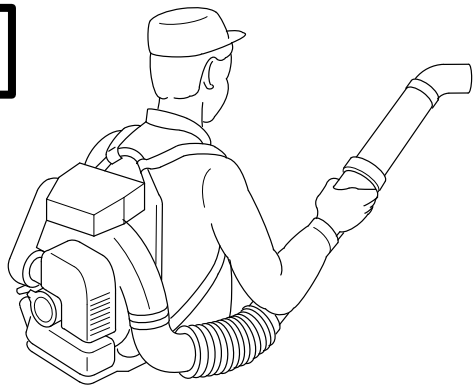

M–3877

Operating position

13

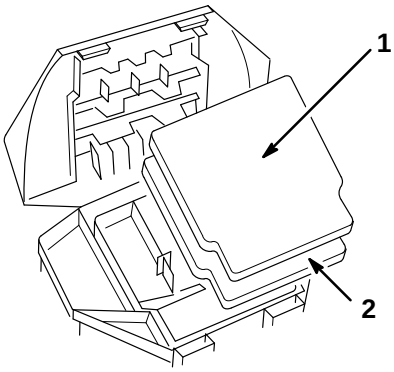

M–3878

1. Sponge air filter
2. Felt air filter

14

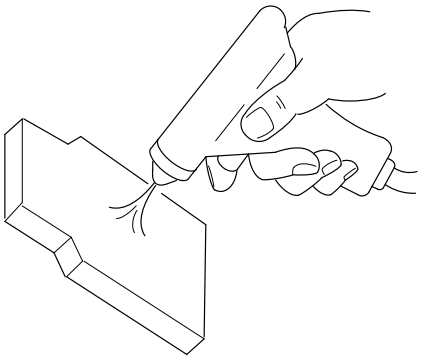

M–3879

15

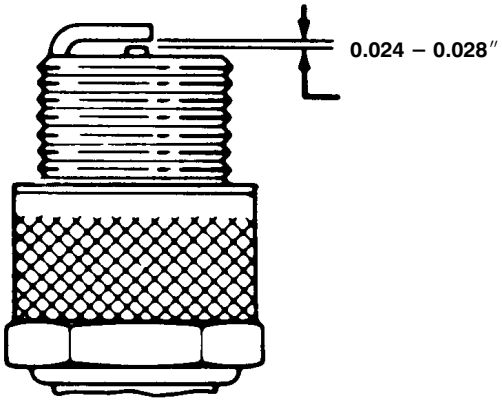

16

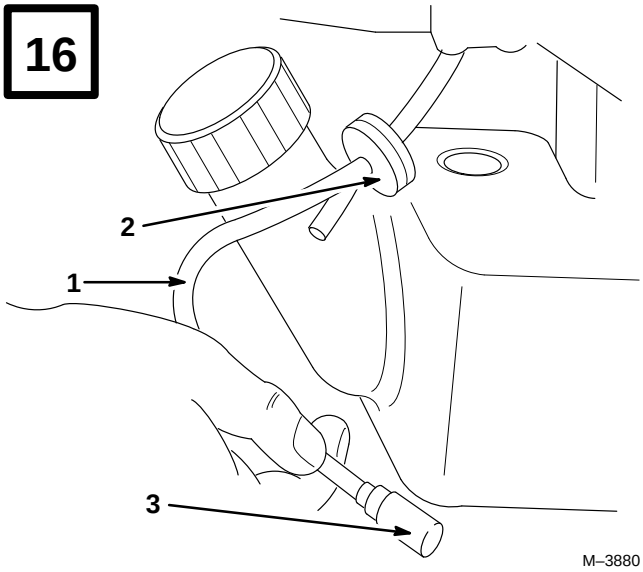

1. Fuel tube
2. Grommet
3. Fuel filter

17

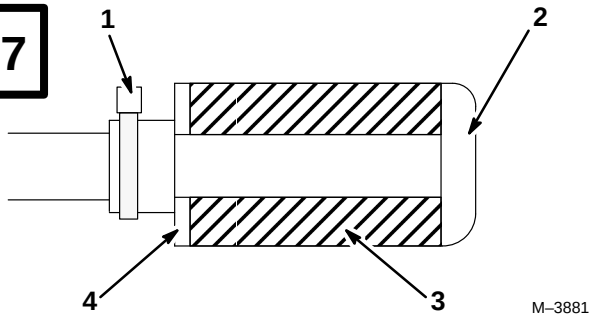

1. Clamp
2. Weight
3. Fuel filter
4. Washer

18

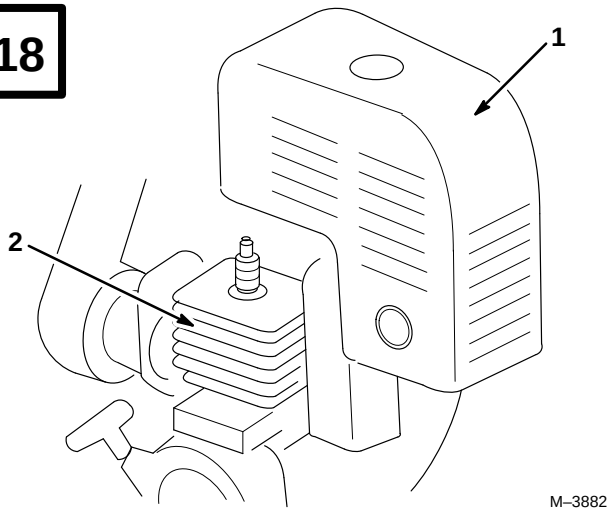

1. Engine cover
2. Cooling fins

Federal and California Emission Control Warranty Statement

A Two Year Limited Warranty

Your Warranty Rights and Obligations

The U.S. Environmental Protection Agency (EPA), the California Air Resources Board (CARB) and Toro are pleased to explain the emission control system warranty on your 1995 and later utility/lawn/garden equipment engine. In California, new utility/lawn/garden equipment engines must be designed, built and equipped to meet the State's stringent anti–smog standards. In other states, new 1997 and later model year utility/lawn/garden equipment engines must be designed, built and equipped, at the time of sale, to meet the U.S. EPA regulations for small nonroad engines. The equipment engine must be free from defects in materials and workmanship which cause it to fail to conform with U.S. EPA standards for the first two years of engine use from the date of sale to the ultimate purchaser. Toro must warrant the emission control system on your utility/lawn/garden equipment engine for the period of time listed above provided there has been no abuse, neglect or improper maintenance of your utility/lawn/garden equipment engine.

Your emission control system may include parts such as the carburetor or fuel injection system, the ignition system, and catalytic converter. Also included may be hoses, belts, and connectors and other emission related assemblies.

Where a warrantable condition exists, Toro will repair your engine at no cost to you including diagnosis, parts and labor.

Manufacturer's Warranty Coverage:

Utility/Lawn/Garden equipment engines are warranted for two years from the date of delivery. If any emission–related part on your engine is defective in materials or workmanship, the part will be repaired or replaced by Toro free of charge.

Owner's Warranty Responsibilities:

- As the engine owner, you are responsible for the performance of the required maintenance listed in your owner's manual. Toro recommends that you retain all receipts covering maintenance on your equipment, but Toro cannot deny warranty solely for the lack of receipts or for your failure to ensure the performance of all scheduled maintenance.
- Any replacement part or service that is equivalent in performance and durability may be used in non–warranty maintenance or repairs, and shall not reduce the warranty obligations of the engine manufacturer.
- As the engine owner, you should, however, be aware that Toro may deny you warranty coverage if your engine or a part has failed due to abuse, neglect, improper maintenance or unapproved modifications or parts.
- You are responsible for presenting your equipment engine to a TORO Service Dealer as soon as a problem exists. The warranty repairs should be completed in a reasonable amount of time, not to exceed 30 days.
- If you have any questions regarding your warranty rights and responsibilities or if you need a referral to a TORO Service Dealer, please feel free to contact us at the following address:

  Toro Customer Service Department
  8111 Lyndale Avenue South
  Bloomington, MN 55420–1196
  612–888–8801
  800–348–2424

Warranted Parts:

The warranty period begins on the date the engine or equipment is delivered to a retail purchaser. The manufacturer warrants to the initial owner and each subsequent purchaser that the engine is free from defects in materials and workmanship which cause the engine to fail to conform with applicable regulations for a period of two years.

Failures caused by abuse, neglect, or improper maintenance are not covered. The use of add–on or modified parts can be grounds for disallowing a warranty claim. The manufacturer is not liable to cover failures of warranted parts caused by the use of add–on or modified parts. Toro is liable for damages to other engine components caused by the failure of a warranted part still under warranty. The owner is responsible for the performance of the required maintenance, as defined by the manufacturer in the written instructions.
Any warranted part which is not scheduled for replacement as required maintenance, or which is scheduled only for regular inspection to the effect of ”repair or replace as necessary” shall be warranted for the warranty period. Any warranted part which is scheduled for replacement as required maintenance shall be warranted for the period of time up to the first scheduled replacement point for that part. Coverage under this warranty extends only to the parts listed below (the emissions system parts) to the extent that these parts were present on the engine when purchased.

– Fuel Metering System
  - Cold start enrichment system including the choke mechanism or priming system
  - Fuel pump
  - Air fuel ratio feed back system
  - Carburetor and internal parts
  - Fuel injection system

– Air Induction System
  - Air cleaner
  - Reed intake system
  - Intake manifold
  - Controlled hot air intake system

– Ignition System
  - Spark plug(s)
  - Ignition coils and electronics
  - Advance/retard mechanisms

– Catalytic Converter/Thermal Reactor System
  - Catalytic converter
  - Thermal reactor
  - Exhaust manifold

– Air Injection System
  - Air injection system or pulse valve
  - Valves affecting distribution of air

– Exhaust Gas Recirculation (EGR) System
  - EGR valve body and piping system connecting to the intake side of the engine
  - EGR control system

– Particulate Controls
  - Traps filters, precipators and any other device used to capture particulate emissions

– Miscellaneous Items Used in the Above Systems
  - Vacuum, temperature, and time sensitive valves and switches
  - Electronic controls
  - Hoses, connectors, and assemblies of same

How to Get Warranty Service:

Should you feel your TORO Product requires warranty service, contact the dealer who sold you the product or any Authorized TORO Service Dealer or TORO Master Service Dealer. The Yellow Pages of your telephone directory is a good reference source. The dealer will either arrange service at his/her dealership or recommend another Authorized Service Dealer who may be more convenient. You may need proof of purchase (copy of registration card, sales receipt, etc.) for

warranty validation. The owner shall not be charged for diagnostic labor which leads to the determination that a warranted part is defective, if the diagnostic work is performed at a warranty station.

The Toro Company is not liable for indirect, incidental or consequential damages in connection with the use of the TORO Products covered by this warranty, except for damages to other engine components caused by the failure of a warranted part still under warranty. Some states do not allow exclusions of incidental or consequential damages, so the above exclusion may not apply to you.

This warranty gives you specific legal rights, and you may also have other rights which vary from state to state.

TORO. Hand Held Gas Products

THE TORO TOTAL COVERAGE GUARANTEE

A Full Warranty
(Limited Warranty for Commercial Use)

What Is Covered By This Express Warranty?

The Toro Company promises to repair any TORO Product used for normal residential purposes* if defective in materials or workmanship. The following time periods apply from the date of purchase:

- TORO Hand Held Gas Products with Model Numbers of 51911, 51916, 51918 and 58452 . . . . . 3 year full warranty
- All other TORO Hand Held Gas Products . . . . . 2 year full warranty

The cost of parts and labor is included, but the customer pays the transportation costs.

*Normal residential purposes means use of the product on the same lot as your home. Use at more than one location is considered commercial use and the commercial use warranty would apply.

What Products Are Covered By This Warranty?

This warranty applies to all TORO Hand Held Gas Powered Trimmers, Blowers/Vacs, Cultivators and Brushcutters. All other TORO gas powered or electric powered products are covered by separate warranty statements.

How About Commercial Use?

Toro Consumer Products used for commercial, institutional or rental use are warranted against defects in material or workmanship. The following time period applies from the date of purchase:

- TORO Hand Held Gas Products used Commercially . . . . . 45 day limited warranty

Repair by an Authorized Toro Dealer is your sole remedy under this warranty.

How Do You Get Warranty Service?

Should you feel your TORO Product requires warranty service, contact the retailer who sold you the product or any Authorized TORO Service Dealer or TORO Master Service Dealer. The Yellow Pages of your telephone directory is a good reference source. The dealer will either arrange service at his/her dealership or recommend another Authorized Service Dealer who may be more convenient. You may need proof of purchase (copy of registration card, sales receipt, etc.) for warranty validation.

If for any reason you are dissatisfied with the Service Dealer's analysis of the defect in materials or workmanship or if you need a referral to a TORO Service Dealer, please feel free to contact us at the following address:

Toro Customer Service Department
8111 Lyndale Avenue South
Bloomington, MN 55420–1196
612–888–8801
800–348–2424

30 Day Satisfaction Guarantee

If for any reason you are not satisfied with your TORO Hand Held Gas Product within the first 30 days of residential use, you may return the product to the retail outlet where purchased. The retailer will offer the purchaser the option of either a refund of the original purchase price or credit for the full value toward the purchase of a similar TORO Hand Held Gas Product. All refund or credit arrangements must be made through the retailer who originally sold you the TORO Hand Held Gas Product.

What Must You Do To Keep The Warranty In Effect?

You must maintain your TORO Product by following the maintenance procedures described in the operator's manual. Such routine maintenance, whether performed by a dealer or by you, is at your expense.

What Does This Warranty Not Cover? and How Does Your State Law Relate To This Warranty?

There is no other express warranty except for special emission system coverage on some products. This express warranty does not cover:

- Cost of regular maintenance service or parts, such as filters, fuel, lubricants, tune–up parts, blade sharpening or cable/linkage adjustments.
- Any product or part which has been altered or misused or required replacement or repair due to accidents or lack of proper maintenance.
- Repairs necessary due to improper fuel, contaminants in the fuel system, or failure to properly prepare the fuel system prior to any period of non–use over three months.
- Pickup and delivery charges.

All repairs covered by this warranty must be performed by an Authorized TORO Service Dealer using Toro approved replacement parts.

The Toro Company is not liable for indirect, incidental or consequential damages in connection with the use of the TORO Products covered by this warranty, including any cost or expense of providing substitute equipment or service during reasonable periods of malfunction or non–use pending completion of repairs under this warranty. Some states do not allow exclusions of incidental or consequential damages, so the above exclusion may not apply to you.

This warranty gives you specific legal rights, and you may also have other rights which vary from state to state.

COUNTRIES OTHER THAN THE UNITED STATES AND CANADA

Customers who have purchased TORO products exported from the United States or Canada should contact their TORO Distributor (Dealer) to obtain guarantee policies for your country, province, or state. If for any reason you are dissatisfied with your Distributor's service or have difficulty obtaining guarantee information, contact the TORO importer. If all other remedies fail, you may contact us at The Toro Company.

Rev. 6/18/97


TORO®