Form No. 3405-167 Rev A

TORO®

Count on it.

Parts Catalog

Ultra Sonic Boom™ Leveling Kit

2013 and After Multi-Pro 5800, 1750 and WM Turf Sprayers and Workman® 200 Spray System

Model No. 41219—Serial No. 316000001 and Up

Register at www.Toro.com.
Original Instructions (EN)

CE

3405-167 A

Ordering Replacement Parts

To order replacement parts, please supply the part number, the quantity, and the description of each part desired.

Understanding Reference Numbers

Each identified part in an illustration has a reference number. The reference number for a part also appears in the parts list, along with other information about the part.

This catalog uses two special reference number formats, one to indicate parts in a service assembly and another to indicate the quantity of a given part in an illustration.

Service Assembly Reference Numbers

Parts in service assemblies have reference numbers in the form a:b. The a represents the reference number of the entire service assembly and the b represents a sequential number unique to each part within the service assembly.

For example, a wheel assembly might be identified by reference number 6, the tire by 6:1, the valve by 6:2, and the wheel by 6:3. When you order the assembly identified by reference number 6, you receive all parts identified by reference numbers 6:1,6:2, and 6:3. However, you may also order any part individually. Reference numbers of this type appear in illustration and in parts lists.

Reference Numbers Indicating Quantity

In an illustration, if a reference number indicates more than one part, the reference number has the form nX y. The n represents the quantity of the part, the X is the multiplication symbol, and the y represents the reference number.

For example, in an illustration, the reference number 2X 37 means that two of the parts identified by reference number 37 are indicated.

List of Abbreviations

AR: as required

ASM: assembly

BBC: blade brake control

BHTF: button head thread forming

CARR: carriage

CCW: counter clockwise

CW: clockwise

DEG: degrees

DPA: Dual Point Adjustment

ECM: electronic control module

EXT: external

FH: flat head

GA: gauge

HD: heavy-duty

HF: hex flange

HH: hex head

HHF: hex head flange

HHFTF: hex head flange thread forming

HJ: hex jam

HLH: hex lag head

HOC: height-of-cut

HP: high pressure

HSBH: hex socket button head

HSFH: hex socket flat head

HSH: hex socket head

HWH: hex washer head

HWHTF: hex washer head thread forming

HYD: hydraulic

LH: left hand

LP: low pressure

LPG: Liquefied Petroleum Gas

NI: nylon insert

NPTF: national pipe thread fine

PFH: phillips flat head

PPH: phillips pan head

PPHTF: phillips pan head thread forming

PRH: phillips round head

PTH: phillips truss head

PTO: power-take-off

RH: right hand

ROPS: roll-over protection system

RRB: rear roller brush

SFH: slotted fillister head

SHH: slotted hex head

SHWH: slotted hex washer head

SPH: slotted pan head

SQH: square head

SRH: slotted round head

STD: standard

TAP: self tapping

TTH: torx truss head

Contents

Ultra Sonic Boom Leveling Kit 4
Controller and Valve Assembly 5
Manifold Assembly No. 130-8234 6

© 2016—The Toro® Company
8111 Lyndale Avenue South
Bloomington, MN 55420

Contact us at www.Toro.com.
Printed in the USA.
All Rights Reserved

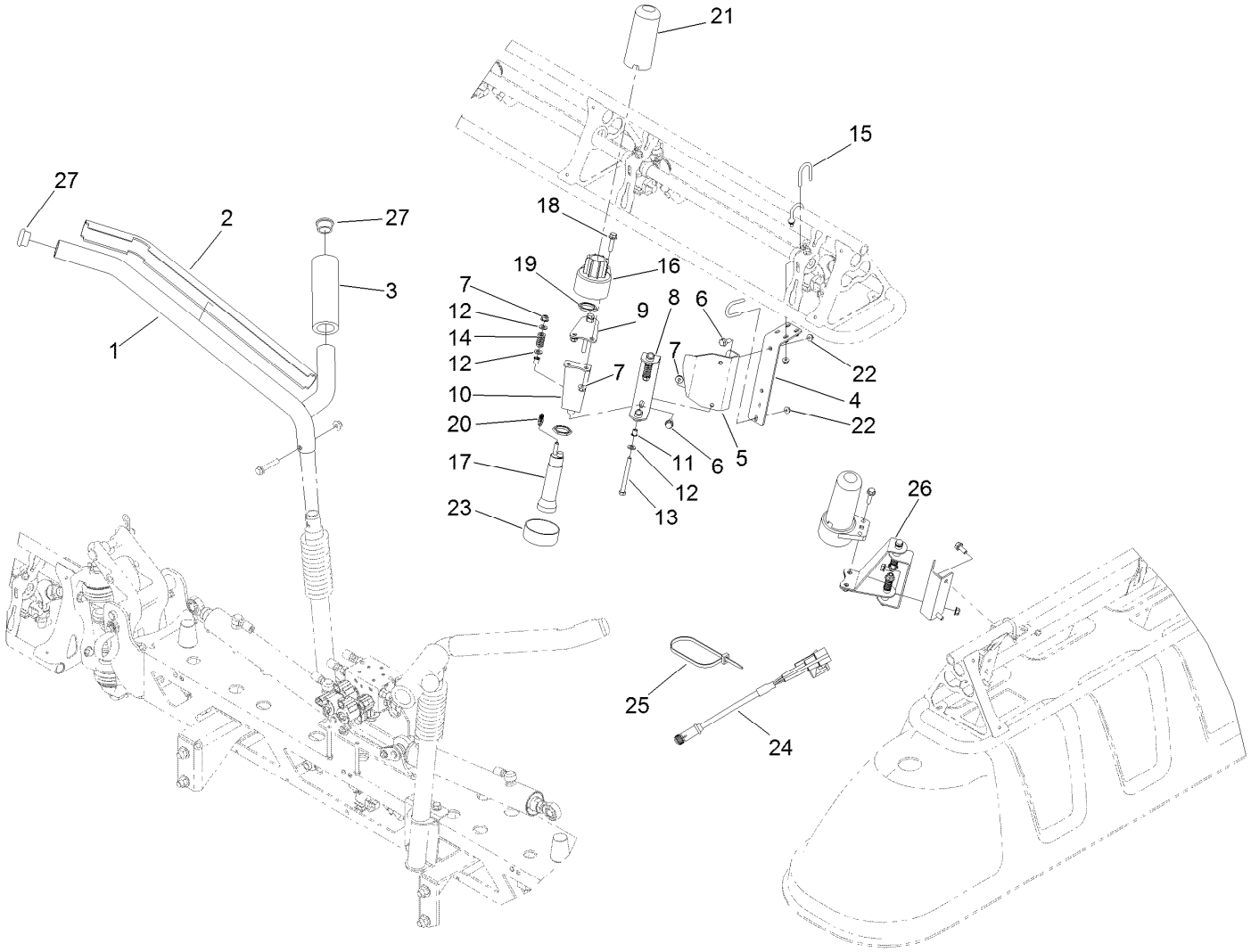

Ultra Sonic Boom Leveling Kit

Ref.	Part Number	Qty.	Description
1	120-8575-03	2	Upper Cradle ASM
2	120-8576	2	Cover-Slide
3	108-3457	2	Spacer
4	120-8589-03	2	Bracket-Tube
5	120-0757-03	2	Bracket-Tube
6	3234-47	8	Screw-HHF
7	104-8300	16	Nut-Flange, NI
8	120-0608-03	2	Hinge
9	120-0611-03	2	Strap
10	120-0613-03	2	Strap
11	120-0761	8	Bushing
12	3256-23	12	Washer-Flat
13	322-20	4	Screw-HH
14	110-5331	4	Spring-Compression
15	92-0010	6	U-Bolt

Ref.	Part Number	Qty.	Description
16	120-0646	2	Housing-Lower, Ultrasonic Sensor
17	117-8114	2	Sensor-Sonic
18	3234-36	4	Screw-HHF
19	120-0647	4	Nut
20	120-0648	2	Plug-Programming
21	120-0645	2	Cover-Sensor, Ultrasonic
22	104-7201	16	Nut-Flange, NI
23	120-0772	2	Cap-Tube
24	117-8115	2	Cable-Ultrasonic Sensor, 4 Meter
25	3290-378	24	Tie-Cable
26	120-0799-03	2	Strap
27	108-3489	4	Cap-Tube

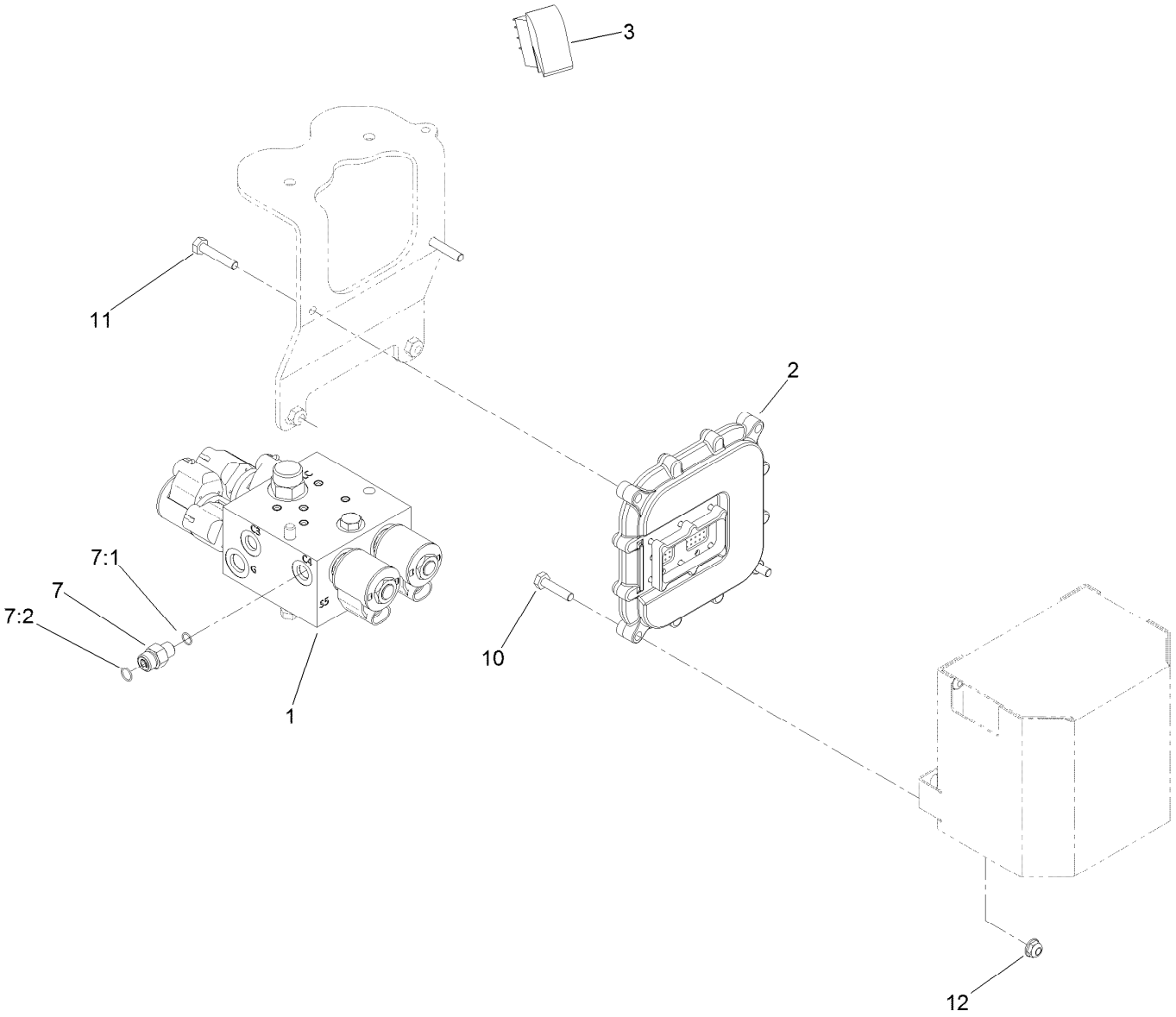

Controller and Valve Assembly

Ref.	*Part Number*	*Qty.*	*Description*
1	130-8234	1	Manifold ASM
2	114-3321	1	Controller-Tec
3	100-8490	1	Switch-Rocker
7	340-92	4	Fitting-HYD, Straight
7:1	237-78	1	O-Ring
7:2	237-21	1	O-Ring
10	321-7	4	Screw-HH
11	321-13	2	Screw-HH
12	104-7201	4	Nut-Flange, NI

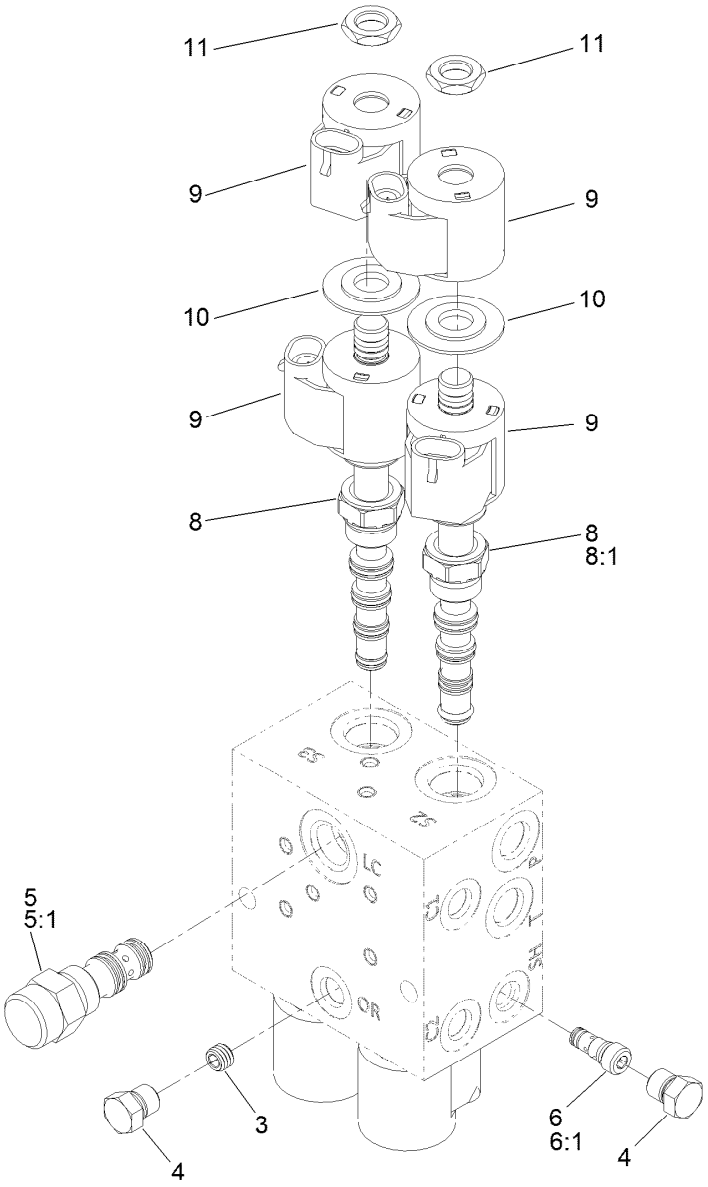

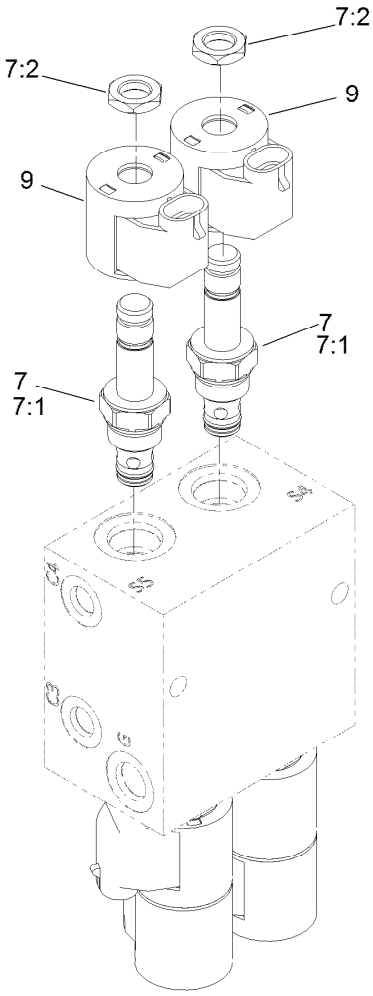

Manifold Assembly No. 130-8234

Ref.	*Part Number*	*Qty.*	*Description*
3	110-5973	1	Orifice-0.030
4	117-0115	2	Plug
5	110-8770	1	Logic Element
5:1	110-8773	1	Seal Kit
6	117-8313	1	Shuttle-Load
6:1	117-7597	1	Seal Kit
7	112-9206	2	Solenoid Valve ASM
7:1	105-9156	1	Seal Kit
7:2	110-2634	1	Nut-Coil
8	130-8235	2	Vavle-Solenoid
8:1	120-5159	1	Seal Kit
9	110-0497	6	Coil-Solenoid
10	120-2586	2	Spacer-Coil
11	110-2634	4	Nut-Coil

Notes:



Count on it.