Form No. 3405-190 Rev A

Wire Harness Update Kit

2013 and After Multi Pro® 5800 Turf Sprayer Ultra Sonic Boom™ Finishing Kit

Model No. 133-2861

Installation Instructions

⚠ WARNING

CALIFORNIA
Proposition 65 Warning

This product contains a chemical or chemicals known to the State of California to cause cancer, birth defects, or reproductive harm.

Installation

Loose Parts

Use the chart below to verify that all parts have been shipped.

Procedure	Description	Qty.	Use
1	No parts required	–	Install the kit.

1

Installing the Kit

No Parts Required

Procedure

1. Park the machine on a level surface, set the parking brake, shut off the engine, and remove the key from the ignition switch.
2. Disconnect the negative (-) battery cable from the battery.
3. Remove the 5 bolts from the right panel on the control console, then remove the panel (Figure 1).

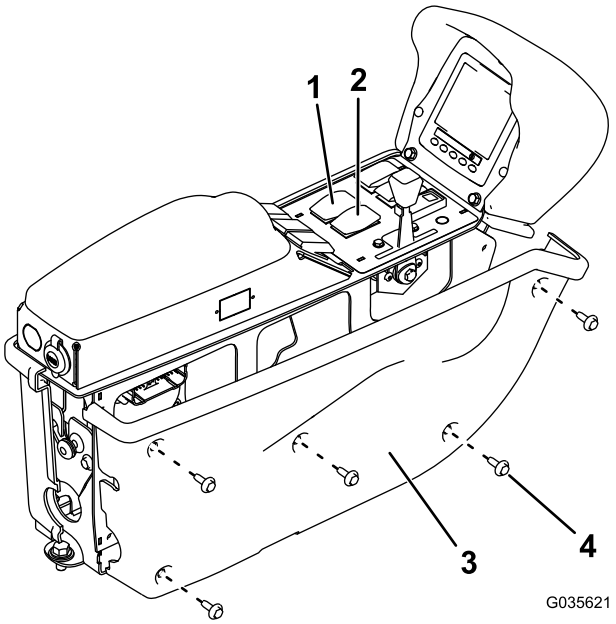

Figure 1

1. Left actuator switch
2. Right actuator switch
3. Right panel
4. Bolt

© 2016—The Toro® Company
8111 Lyndale Avenue South
Bloomington, MN 55420

Register at www.Toro.com.

CE

Original Instructions (EN)
Printed in the USA
All Rights Reserved

3405-190 A

4. Remove the cable tie closest to the wire harness connectors to the left and right actuator switches.
5. Disconnect the connectors from both actuator switches (Figure 1).
6. Cut the 3 wires within 2.5 cm (1 inch) of the connector for the left actuator switch and strip 1.0 to 1.3 cm (3/8 to 1/2 inch) of the wire (Figure 2).

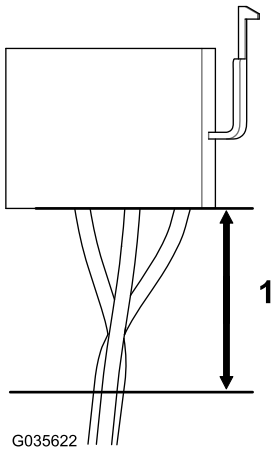

Figure 2

1. 2.5 cm (1 inch)

7. Install the wires into the heat-shrink splices of the kit wire harness, matching the colors of the wires (Figure 3).

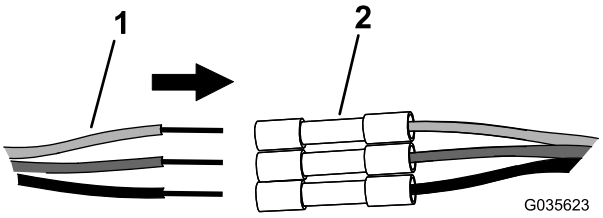

Figure 3

1. Wire
2. Heat-shrink splice

8. Crimp all 3 wires.
9. Repeat steps 6 through 8 for the right actuator switch.
10. Heat the insulation on both ends of the heat-shrink splices until the wires are sealed.
11. Use a cable tie to secure the connector for the indicator light to the wire harness.
12. Slide the convoluted tubing on the wire harness to 8.9 cm (3-1/2 inches) from the connectors and secure it in place using 1 or 2 cable ties.
13. Connect the connectors to their respective actuator switches (Figure 1).
14. Install the right panel on the control console (Figure 1).
15. Connect the negative (-) battery cable to the battery.