Form No. 3405-266 Rev A

Clutch Assembly Kit

Greensmaster® Flex™ 1820 or Flex™ 2120 Traction Unit

Model No. 133-2315

Installation Instructions

⚠ WARNING

CALIFORNIA
Proposition 65 Warning

This product contains a chemical or chemicals known to the State of California to cause cancer, birth defects, or reproductive harm.

Installation

1. Park the machine on a level surface, shut off the engine, set the parking brake, and remove the key from the ignition switch.
2. Remove the plug from the vent adapter (Figure 1).

   Note: To avoid losing transmission fluid, don't tip the clutch after the plug has been removed.
3. Install the vent onto the vent adapter (Figure 1).

   Note: The vent is included in the kit.
4. Tighten the vent until the gasket contacts the clutch cover and then turn it an additional 75° to 85°.

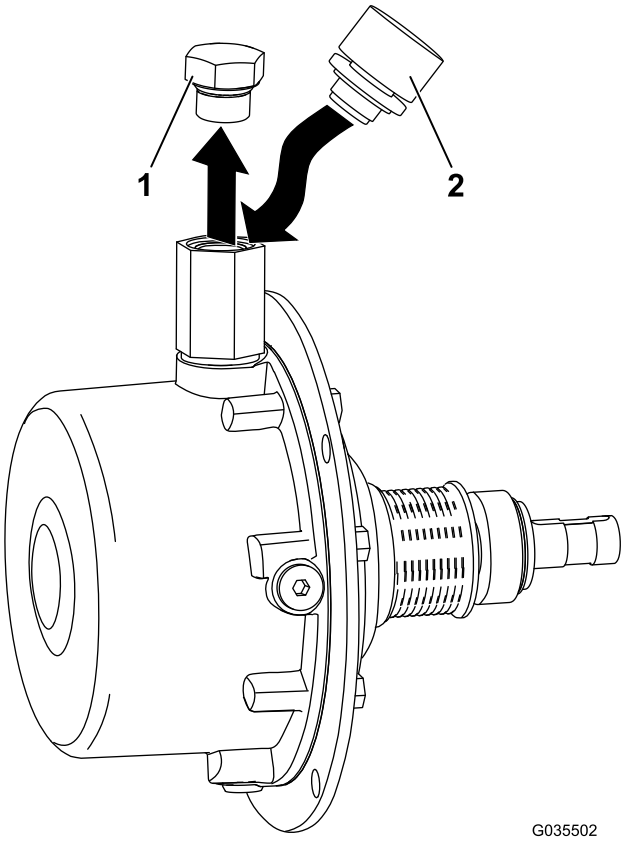

Figure 1

1. Plug
2. Vent

© 2016—The Toro® Company
8111 Lyndale Avenue South
Bloomington, MN 55420

Register at www.Toro.com.

CE

Original Instructions (EN)
Printed in the USA
All Rights Reserved

3405-266 A