FORM NO. 3317–905GB

TORO®

MODEL NO. 20803B – 6900001 & UP
MODEL NO. 20808B – 6900001 & UP

OPERATOR'S MANUAL

48 CM RECYCLER®
MOWER

⚠ SAFETY INSTRUCTIONS

TRAINING

1. Read the instructions carefully. Be familiar with the controls and the proper use of the equipment.
2. Never allow children or people unfamiliar with these instructions to use the lawnmower. Local regulations may restrict the age of the operator.
3. Never mow while people, especially children, or pets are nearby.
4. Keep in mind that the operator or user is responsible for accidents or hazards occurring to other people or their property.

PREPARATION

1. While mowing, always wear substantial footwear and long trousers. Do not operate the equipment when barefoot or wearing open sandals.
2. Thoroughly inspect the area where the equipment is to be used and remove all objects which may be thrown by the machine.
3. WARNING – Petrol is highly flammable.

- Store fuel in containers specifically designed for this purpose.
- Refuel outdoors only and do not smoke while refuelling.
- Add fuel before starting the engine. Never remove the cap of the fuel tank or add petrol while the engine is running or when the engine is hot.
- If petrol is spilled, do not attempt to start the engine but move the machine away from the area of spillage and avoid creating any source of ignition until petrol vapors have dissipated.
- Replace all fuel tanks and container caps securely.

4. Replace faulty silencers.
5. Before using, always visually inspect to see that the blades, blade bolts and cutter assembly are not worn or damaged. Replace worn or damaged blades and bolts in sets to preserve balance.
6. On multi-bladed machines, take care as rotating one blade can cause other blades to rotate.

OPERATION

1. Do not operate the engine in a confined space where dangerous carbon monoxide fumes can collect.
2. Mow only in daylight or in good artificial light.
3. Avoid operating the equipment in wet grass, where feasible.
4. Always be sure of your footing on slopes.
5. Walk, never run.
6. For wheeled rotary machines, mow across the face of slopes, never up and down.
7. Exercise extreme caution when changing direction on slopes.
8. Do not mow excessively steep slopes.
9. Use extreme caution when reversing or pulling the lawnmower towards you.
10. Stop the blade(s) if the lawnmower has to be tilted for transportation when crossing surfaces other than grass, and when transporting the lawnmower to and from the area to be mowed.
11. Never operate the lawnmower with defective guards or shields, or without safety devices, for example deflectors and/or grass catchers, in place.
12. Do not change the engine governor settings or overspeed the engine.
13. Disengage all blade and drive clutches before starting the engine.
14. Start the engine or switch on the motor carefully according to instructions and with feet well away from the blade(s).
15. Do not tilt the lawnmower when starting the engine or switching on the motor, except if the lawnmower has to be tilted for starting. In this case, do not tilt it more than absolutely necessary and lift only the part which is away from the operator.
16. Do not start the engine when standing in front of the discharge chute.
17. Do not put hands or feet near or under rotating parts. Keep clear of the discharge opening at all times.
18. Never pick up or carry a lawnmower while the engine is running.

©The Toro Company–1995
All Rights Reserved

⚠ SAFETY INSTRUCTIONS

19. Stop the engine and disconnect the spark plug wire.

- before clearing blockages or unclogging chute;
- before checking, cleaning or working on the lawnmower;
- after striking a foreign object. Inspect the lawnmower for damage and make repairs before restarting and operating the lawnmower;
- if lawnmower starts to vibrate abnormally (check immediately).

20. Stop the engine

- whenever you leave the lawnmower;
- before refuelling.

21. Reduce the throttle setting during engine shut down and, if the engine is provided with a shut-off valve, turn the fuel off at the conclusion of mowing.

22. Go slow when using a trailing seat.

MAINTENANCE AND STORAGE

1. Keep all nuts, bolts and screws tight to be sure the equipment is in safe working condition.

2. Never store the equipment with petrol in the tank inside a building where fumes may reach an open flame or spark.

3. Allow the engine to cool before storing in any enclosure.

4. To reduce the fire hazard, keep the engine, silencer, battery compartment and petrol storage area free of grass, leaves, or excessive grease.

5. Check the grass catcher frequently for wear or deterioration.

6. Replace worn or damaged parts for safety.

7. If the fuel tank has to be drained, this should be done outdoors.

SOUND PRESSURE LEVEL

Model 20803B

This unit has an equivalent continuous A-weighted sound pressure at the operator ear of: 83 dB(A), based on measurements of identical machines per ANSI B71.5-1984 procedures.

Model 20808B

This unit has an equivalent continuous A-weighted sound pressure at the operator ear of: 82 dB(A), based on measurements of identical machines per ANSI B71.5-1984 procedures.

SOUND POWER LEVEL

This unit has a sound power level of: 96 dB(A)/1 pW, based on measurements of identical machines per Directive 84/538/EEC and amendments.

VIBRATION LEVEL

Model 20803B

This unit has a maximum hand-arm vibration level of 9.4 m/s^2, based on measurement of identical machines per ISO 5349 procedures.

Model 20808B

This unit has a maximum hand-arm vibration level of 5.5 m/s^2, based on measurement of identical machines per ISO 5349 procedures.

SYMBOL GLOSSARY

Safety alert triangle—symbol within triangle indicates a hazard



Safety alert symbol



Read operator's manual



Consult technical manual for proper service procedures



Stay a safe distance from the machine

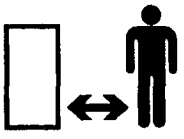

Stay a safe distance from the mower

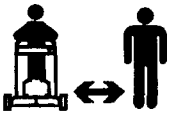

Thrown or flying objects—Whole body exposure

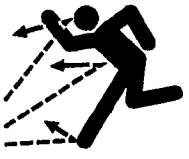

Thrown or flying objects—Rotary side-mounted mower. Keep deflector shield in place.

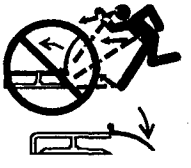

Stop engine before leaving operator position



Do not open or remove safety shields while engine is running

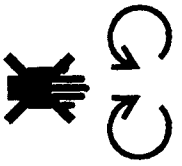

Rotating blade can cut off toes or fingers. Stay clear of mower blade as long as engine is running.

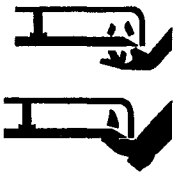

To avoid blade failure when mulching, use blade stiffener when mower is equipped with mulching plug

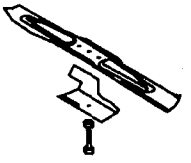

Transmission

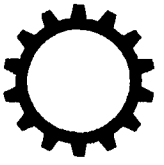

Oil



On/Run



Engage

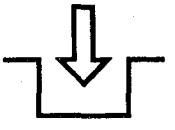

Disengage

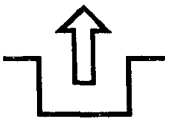

Battery charging condition

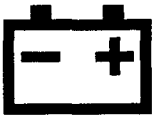

SYMBOL GLOSSARY

Hourmeter/elapsed operating hours

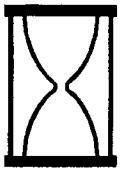

Fast



Slow



Decreasing/increasing



Grease lubrication point



Engine start



Engine stop



Choke



Primer (start aid)



Push primer three times

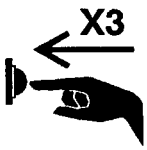

Fuel



Neutral

N

First gear

1

Second gear

2

Third gear

3

Cutting element—basic symbol



Cutting element—Height adjustment



Pull rope

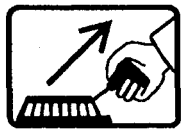

Wheel



Wheel traction

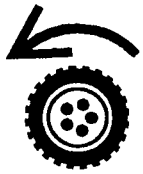

SYMBOL GLOSSARY

Properly dispose of batteries



Insert key into ignition switch



Turn key in ignition switch



Move control

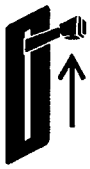

Move control forward

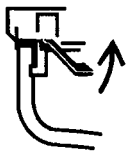

Move control rearward

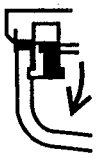

Lower control bar



Raise control bar



Raise/lower control bar



Raise/lower control bar

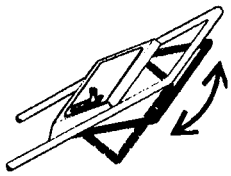

Raise control bar

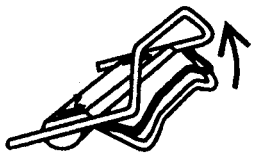

Raise control bar



Lower control bar



TABLE OF CONTENTS

	Page
Set–Up Instructions	6
Before Operating	7
Recycling Tips	8
Operating Instructions	9
Maintenance	12
Servicing Air Cleaner	12
Replacing Spark Plug	12
Draining Gasoline	12
Changing Crankcase Oil	12
Adjusting Throttle	13
Adjusting Wheel Traction Drive	13
Adjusting Brake Cable	14
Inspecting/Removing/Sharpening Blade	14
Lubrication	15
Cleaning Mower Housing	15
Preparing Mower For Storage	16
Product Identification	16
Toro Service Support	17
Maintenance Record	17

SET–UP INSTRUCTIONS

INSTALL HANDLE

1. INSTALLING HANDLE—Loosen knobs on mounting brackets (Fig. 1).

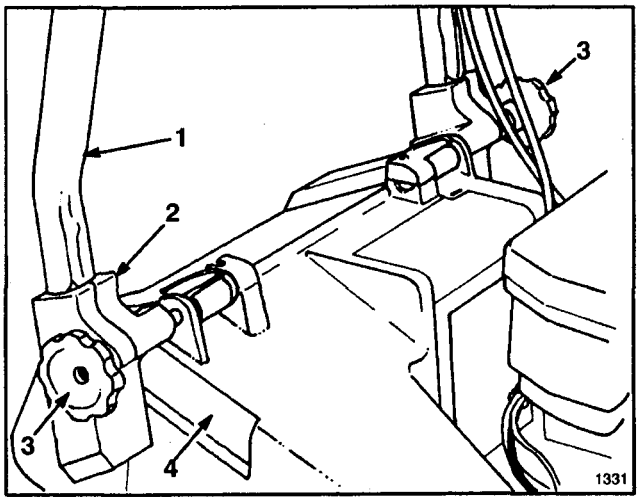

Figure 1

1. **Handle**
2. **Mounting bracket**
3. **Knobs**
4. **Housing pocket**

2. Position mounting brackets in a vertical position so that holes face up.

3. Slide handle ends into holes in mounting brackets until handle ends are completely seated in brackets (Fig.1). Make sure throttle cable and traction cable (self–propelled model) are positioned on top of left mounting bracket (Fig. 2).

4. Rotate handle and mounting brackets rearward until brackets fit securely into housing pockets (Fig. 2).

5. Tighten knobs until edges of slots on top of mounting brackets touch.

6. Use cable tie to secure cable(s) to lower side of left hand tube (Fig. 3). Cable tie should be positioned 25 mm (1") from bend in handle.
See Figure 3 for correct cable placement.

7. Cut excess length from cable tie on lower left handle.

Note: Make sure cable(s) do not interfere with the raising or lowering of discharge door.

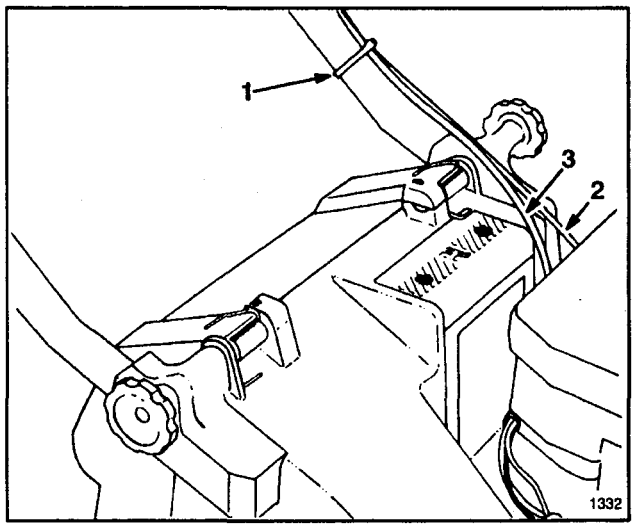

Figure 2

1. **Cable tie**
2. **Throttle cable**
3. *** Traction cable**

*** Self–propelled model**

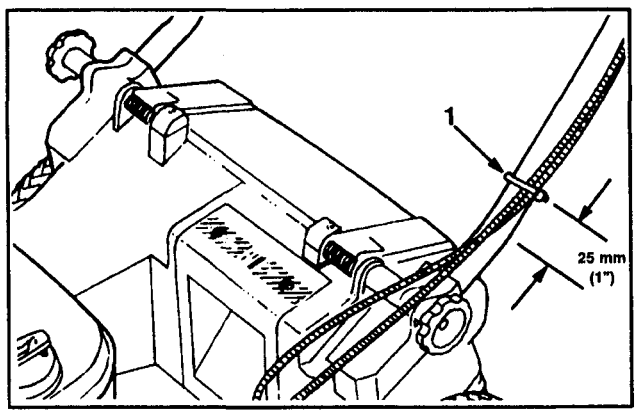

Figure 3

1. **Cable tie**

SET–UP INSTRUCTIONS

INSTALL DISCHARGE TUNNEL PLUG

1. Make sure engine is off.
2. Open discharge door and insert plug into discharge tunnel opening (Fig. 4).
3. Push plug all the way into the discharge tunnel opening.
4. Lower discharge door over plug.

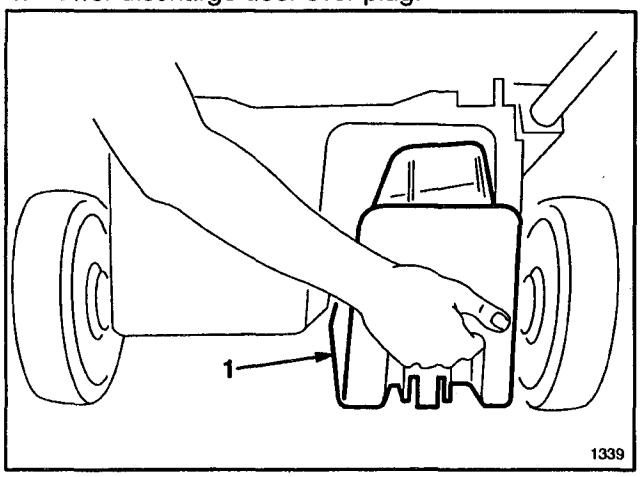

Figure 4

1. Plug

INSTALL STARTER ROPE

1. Pull the starter rope through the rope guide on the handle (Fig. 5). To make the rope easier to loop, squeeze the blade control bar on the handle (Fig. 8) to release the blade brake.

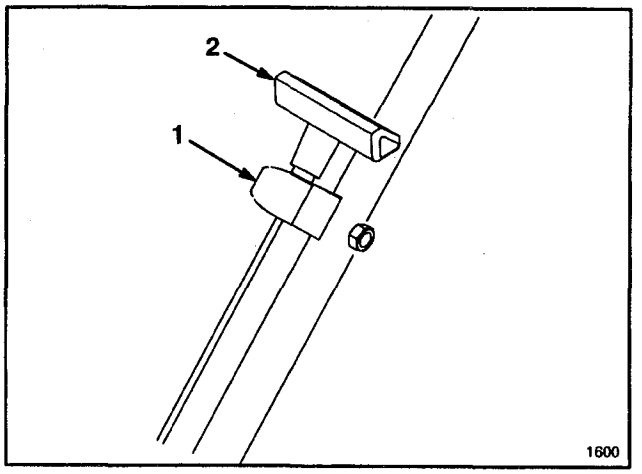

Figure 5

1. Rope guide
2. Starter rope

BEFORE OPERATING

FILL CRANKCASE WITH OIL

Initially, crankcase must be filled with 0.6 L (20 ounces) of SAE 30 oil. Use any high quality detergent oil having the American Petroleum Institute (API) "service classification"—SF, SG or SH.

Before each use, assure oil level is between ADD and FULL mark (Fig. 6). Add oil if level is low.

1. Position mower on level surface and clean around oil dipstick.
2. Remove dipstick by rotating cap counterclockwise 1/4 turn.
3. Wipe dipstick and insert it into filler neck. Rotate cap 1/4 turn. Then remove dipstick and check level of oil (Fig. 6). If level is low, add only enough oil to raise level to FULL mark on dipstick. **DO NOT FILL ABOVE FULL MARK BECAUSE ENGINE COULD BE DAMAGED WHEN STARTED. POUR OIL SLOWLY.**

Note: Check oil level each time mower is used or after every 5 hours of mower operation. Initially, change oil after the first 2 hours of operation; thereafter, change oil after every 25 hours of operation. More frequent oil changes are required in dusty or dirty conditions.

4. Insert dipstick into filler neck and rotate cap clockwise 1/4 turn to lock it in place.

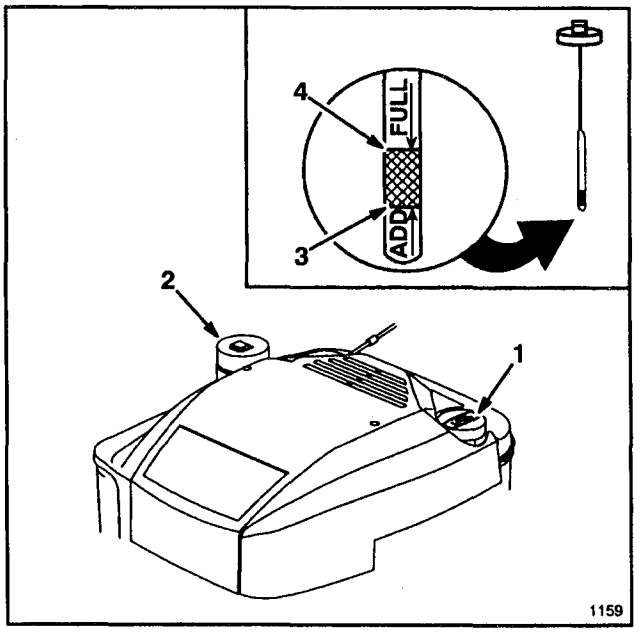

Figure 6

1. Dipstick
2. Fuel tank cap
3. ADD mark
4. FULL mark

BEFORE OPERATING

⚠ WARNING

DANGER: Gasoline is extremely flammable and explosive under certain conditions. DO NOT SMOKE when handling fuel and keep fuel far away from open flames and sparks. Never buy more than a 30 day supply of gasoline. Store it in an approved container. Keep gasoline out of reach of children.

Refuel outdoors and only when engine is cold. Do not fill tank full. Fill tank to within 6 to 13 mm (1/4" to 1/2") from top of tank, not into filler neck. This space is for expansion of fuel. Use funnel or spout to prevent spilling. Wipe up any spilled gas.

FILL FUEL TANK WITH GASOLINE

Note: The Toro Company strongly recommends the use of fresh, clean, **UNLEADED** regular grade gasoline in Toro gasoline powered products. Unleaded gasoline burns cleaner, extends engine life, and promotes good starting by reducing the build–up of combustion chamber deposits. Leaded gasoline can be used if unleaded is not available.

1. Clean around fuel tank cap and remove cap from tank (Fig. 6). Do not fill tank full. Using unleaded gasoline, fill fuel tank to within 6 to 13 mm (1/4" to 1/2") from top of tank, not into filler neck.
2. Install fuel tank cap and wipe up any spilled gasoline.

Toro also recommends that Toro Stabilizer/Conditioner be used regularly in all Toro gasoline powered products during operation and storage seasons. Toro Stabilizer/Conditioner cleans the engine during operation and prevents gum-like varnish deposits from forming in the engine during periods of storage.

IMPORTANT: Do not mix oil with the gasoline. Never use methanol, gasoline containing methanol, gasohol containing more than 10% ethanol, premium gasoline, or white gas because engine fuel system damage could result.

Do not use fuel additives other than those manufactured for fuel stabilization during storage such as Toro's Stabilizer/Conditioner or a similar product. Toro's Stabilizer/Conditioner is a petroleum distillate based conditioner/stabilizer. Toro does not recommend stabilizers with an alcohol base such as ethanol, methanol or isopropyl. Additives should not be used to try to enhance the power or performance of machine.

RECYCLING TIPS

GENERAL TIPS

Follow these instructions whether cutting grass or leaves for the best cutting results and lawn appearance:

- Maintain a **sharp blade** throughout the cutting season. Periodically file down nicks on blade.
- **Only mow dry grass or leaves.** Wet grass and leaves tend to clump on yard and may cause mower to plug or engine to stall. They also may be slippery to walk on and could cause you to slip and fall.

⚠ WARNING

- **Wet grass or leaves can cause you to slip and contact blade.**
- **Blade contact can seriously injure you.**
- **Mow only in dry conditions.**

- Set engine speed to fastest position. Maximum horsepower provides best cutting results.
- Clean clippings or leaves from underside of mower deck after each mowing.
- Keep engine in good running condition. Cutting and recutting requires more horsepower.
- Replace air filter more frequently. Cutting and recutting stirs up more clippings and dust which clogs the air filter and reduces engine performance.

CUTTING GRASS

- Grass grows at different rates at different times of the year. In the heat of the summer, it is generally best to cut grass at the C, D or E height-of-cut settings. Only about 1/3 of the grass blade should be cut off. Cutting below the C setting is not recommended unless grass is sparse or it is late fall when grass growth begins to slow down.
- When cutting grass over six inches tall, you may want to first mow using the highest height-of-cut setting and a slower walking speed; then mow again at a lower setting for best lawn appearance. If grass is too long and leaves clumps on top of lawn, mower may plug and cause engine to stall.
- Alternate mowing direction. This helps disperse clippings over lawn for even fertilization.

If the finished cut lawn appearance is unsatisfactory, try one or more of the following:

- Sharpen the blade.
- Walk at a slower pace while mowing.

RECYCLING TIPS

- Raise the height-of-cut setting on your mower.
- Cut grass more frequently.
- Overlap cutting swaths instead of cutting a full swath with each pass.
- Mow across the marginal areas a second time.

CUTTING LEAVES

- When cutting is complete, always be sure that 50% of the lawn shows through the cut leaf cover. This may require one or more passes over the leaves.
- Walk at a slower mowing speed if leaves are not being cut up finely enough to be hidden down in the grass.
- If you cut up a lot of oak leaves, you might want to add lime to your grass in the spring. Lime reduces the acidity of oak leaves.

OPERATING INSTRUCTIONS

STARTING, STOPPING AND SELF–PROPELLING

CONTROLS—Throttle, blade control bar, self–propel control bar (self–propelled model only) and recoil starter are on upper handle (Fig. 8).

1. Push spark plug wire onto spark plug (Fig. 7).

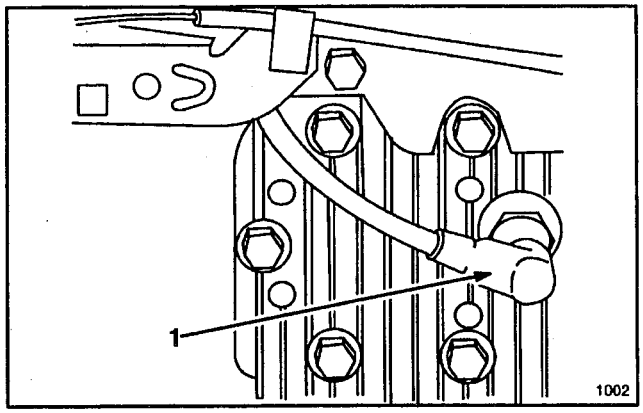

Figure 7
1.Spark plug wire

2. STARTING (Fig. 8)—Move throttle forward to FAST position. Squeeze blade control bar against handle. Pull recoil starter out until slack in rope is taken up. Then pull vigorously to start the engine. When engine starts, regulate engine speed as desired.
3. STOPPING (Fig. 8)—To stop engine, release blade control bar. Pull wire off spark plug if mower will be unattended or not used.
4. WHEEL TRACTION OPERATION (self–propelled model) (Fig. 8)—Squeeze self-propel control bar against handle to drive. To stop the self–propel drive, release the self-propel control bar.

Note: The drive wheels are equipped with freewheeling clutches which enable the mower to be pulled rearward easier when the wheel drive is disengaged. To disengage the clutches, mower must be pushed forward at least 2.5 cm (1") after wheel drive operation has stopped.

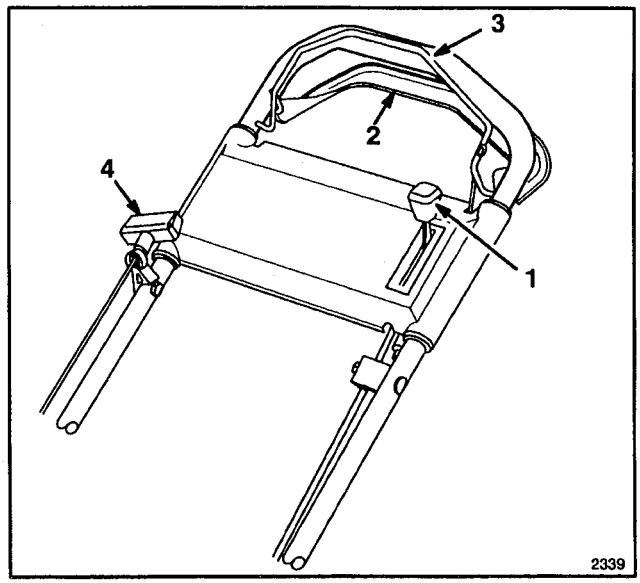

Figure 8

1.Throttle
*** 2.Self–propel control bar**
3.Blade control bar
4.Recoil starter

*** Self–propelled model**

USING DISCHARGE TUNNEL PLUG

1. Stop engine.
2. Open discharge door and insert plug into discharge tunnel opening (Fig. 9).
3. Push plug all the way into the discharge tunnel opening.
4. Lower discharge door over plug.
5. To remove the plug, raise discharge door and pull plug out of discharge tunnel.

OPERATING INSTRUCTIONS

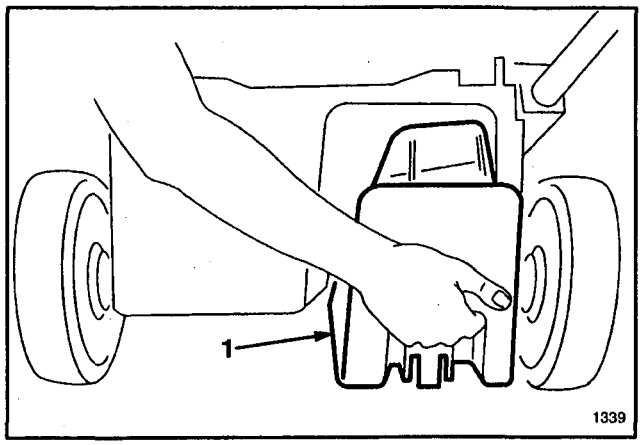

Figure 9

1. Plug

USING GRASS BAG

1. Stop engine and wait for all parts to stop.
2. INSTALLING BAG—Raise discharge door, slide bag ramp attached to bag into discharge opening, and hook bag frame onto mounting bracket (Fig. 10). Allow discharge door to rest on top of bag (Fig. 11).

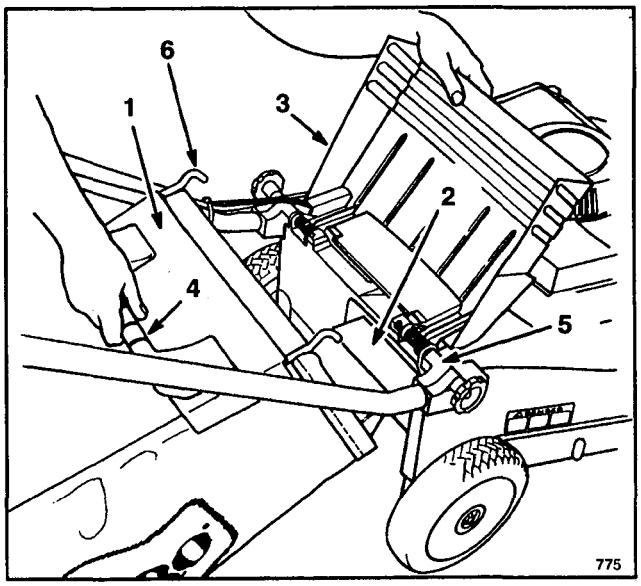

Figure 10

1. Bag door
2. Bag ramp
3. Discharge door
4. Bag handle
5. Mounting bracket
6. Bag frame hook

Note: Make sure grass bag door is **fully** closed against grass bag before installing bag on mower.

3. REMOVING BAG—**Stop engine and wait for all moving parts to stop.** For protection, always keep hands and feet away from mower housing while engine is running. Raise discharge door. While holding discharge door up, grasp handle on grass bag and lift bag off mower. Allow discharge door to close.

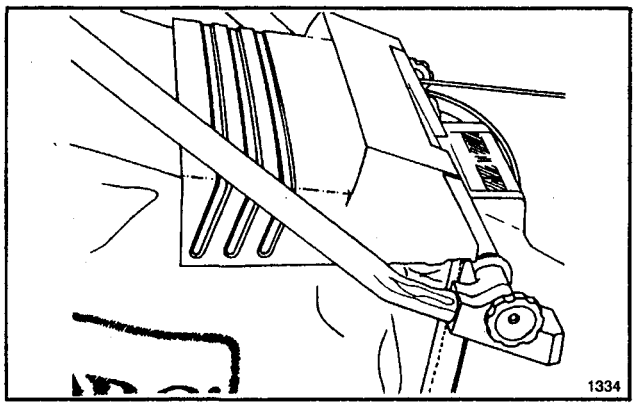

Figure 11

Note: When removing the grass bag, the bag ramp scoops out any clippings that may be plugging the discharge opening. If the discharge opening remains plugged, clear all clippings from the mower.

4. EMPTYING BAG—Grasp bag frame handle and rear of grass bag. Tip bag door up and gradually tip bag forward to empty clippings.

⚠ DANGER

- **Grass clippings and other objects can be thrown from an open discharge tunnel.**
- **Objects thrown with enough force could cause serious personal injury or death to operator or bystander.**
- **Never open door on discharge tunnel when engine is running unless the grass bag or discharge tunnel plug is securely installed.**

⚠ DANGER

- **A worn grass bag could allow small stones and other similar debris to be thrown in operator's or bystander's direction.**
- **Thrown objects can cause serious personal injury or death to operator or bystanders.**
- **Check the grass bag frequently. If it is damaged, install a new genuine TORO replacement bag.**

SETTING HEIGHT-OF-CUT

Toro's exclusive SmartWheel® provides a simple method for determining the proper cutting height.

The SmartWheel has two cutting scales — SPARSE/NORMAL and LUSH — to ensure the best height-of-cut setting in any mowing condition. Use the SPARSE/NORMAL scale during the warm summer season for the majority of your mowing. The LUSH scale is for thick, moist, succulent grass that grows most often in the spring.

OPERATING INSTRUCTIONS

In general, it is recommended that:

- Grass length should usually be cut at the C, D or E settings or **MAINTAINED** at two to three inches in height.
- Cutting below the C setting is not recommended unless grass is sparse or it is late fall when grass growth begins to slow down. When cutting long grass, you may need to use a higher height-of-cut setting and a slower walking speed; then recut the grass at a more normal setting. If grass is too long and leaves clumps on top of lawn, mower may plug and cause engine to stall.
- The SmartWheel calculates the proper setting to ensure that no more than 1/3 of the grass blade is cut off.

1. Before starting the engine and beginning to mow, push the mower into the grass. Stop when the letters on the SmartWheel design on the rear left wheel are upright (Fig. 12).

2. Using the coded SmartWheel design (Fig. 12), compare the tips of the grass blades to the letters on the belt cover. Whichever letter the tips of the grass blades correspond with is the proper cutting height.

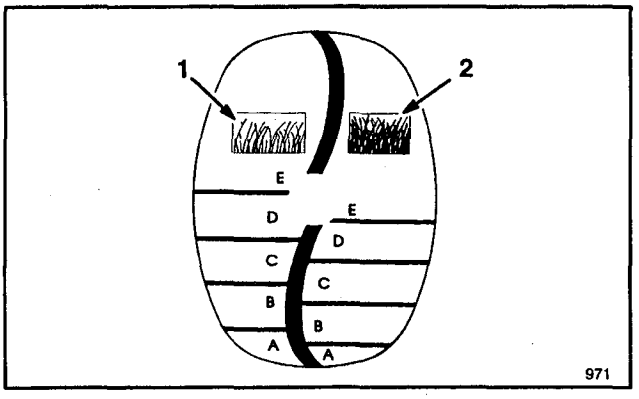

Figure 12

1. **Sparse/normal grass cutting scale**
2. **Lush grass cutting scale**

3. Use one or two fingers to squeeze the height-of-cut adjustment lever (Fig. 13).

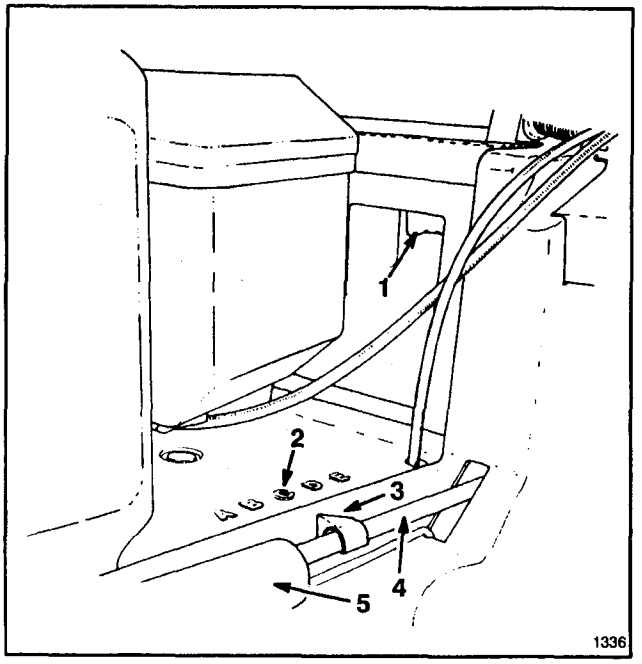

Figure 13

1. **Height-of-cut adjustment lever**
2. **Height settings**
3. **Pointer**
4. **Link rod**
5. **Spring cover**

To raise the wheel height, squeeze the lever to unlock the height-of-cut and pull up on the mower. Release lever when desired height is found. To lower the height, squeeze the height-of-cut adjustment lever and push down on the mower **while rolling the mower forward**. Use the pointer on the link rod to locate the correct setting. All wheels automatically adjust to the same height-of-cut setting.

4. Make sure the height adjustment lever is locked into a height setting before beginning operation. The height should not change when the height-of-cut is locked.

MAINTENANCE

⚠ CAUTION

- **Engine could be started accidentally.**
- **Accidental starting of engine could cause serious injury to operator or bystanders.**
- **Pull wire off spark plug before performing any maintenance or adjustments.**

SERVICING AIR CLEANER

Normally, replace air cleaner after every 25 operating hours. More frequent replacing is required when mower is operated in dusty or dirty conditions. See your Authorized Toro Service Dealer for replacement parts.

1. Stop engine and pull wire off spark plug (Fig. 7).
2. Remove screw securing air cleaner cover to engine (Fig. 14). Tilt air cleaner cover down and clean cover thoroughly.
3. Remove paper air cleaner filter (Fig. 14) and discard.

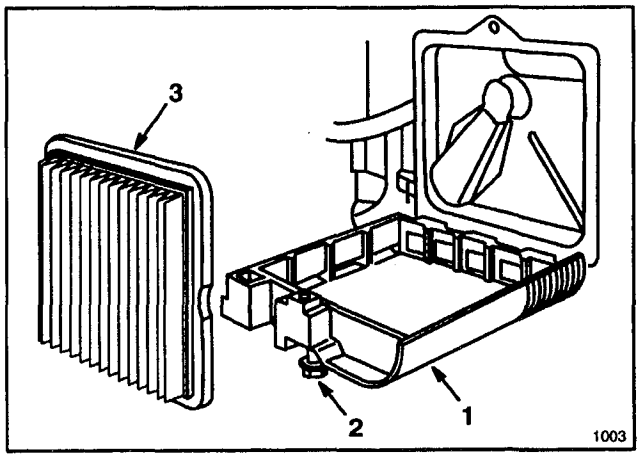

Figure 14

1. Cover 2. Screw 3. Paper filter

4. Insert a new paper air cleaner filter.
5. Reinstall air cleaner cover and secure with screw.

IMPORTANT: Do not operate engine without air cleaner element otherwise extreme engine wear and damage will likely result.

REPLACING SPARK PLUG

Use a Champion RJ19LM spark plug or equivalent. Correct air gap is 0.76 mm (0.030"). Remove plug after every 25 operating hours and check its condition.

1. Stop engine and pull wire off spark plug (Fig. 7).
2. Clean around spark plug and remove plug from cylinder head.

IMPORTANT: Replace a cracked, fouled, or dirty spark plug. Do not sand blast, scrape, or clean electrodes because engine damage could result from grit entering cylinder.

3. Set air gap at 0.76 mm (0.030") (Fig. 15). Install correctly gapped spark plug and gasket seal. Tighten plug firmly to 20 N·m (15 ft–lb).

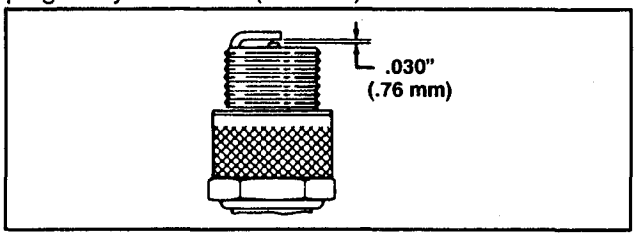

Figure 15

DRAINING GASOLINE

1. Stop engine and wait for engine to cool. Pull wire off spark plug (Fig. 7).

Note: Drain gasoline from a cold engine only.

2. Remove cap from fuel tank and use pump-type syphon to drain fuel into clean gas can.

Note: This is the only procedure recommended for draining fuel.

CHANGING CRANKCASE OIL

Change oil after the first 2 operating hours and after every 25 hours thereafter.

1. Stop engine and pull wire off spark plug (Fig. 7).
2. Lift discharge door and remove grass bag. Drain gasoline from fuel tank: refer to Draining Gasoline, page 12.
3. Reinstall spark plug wire.
4. Since warm oil drains better and carries more contaminants than cold, run engine until it dies.
5. Pull wire off spark plug.
6. Tip mower on its left side. Remove drain plug from underside of mower using a 3/8" socket extension with a wrench for turning (Fig. 16). Place a drain pan under mower.

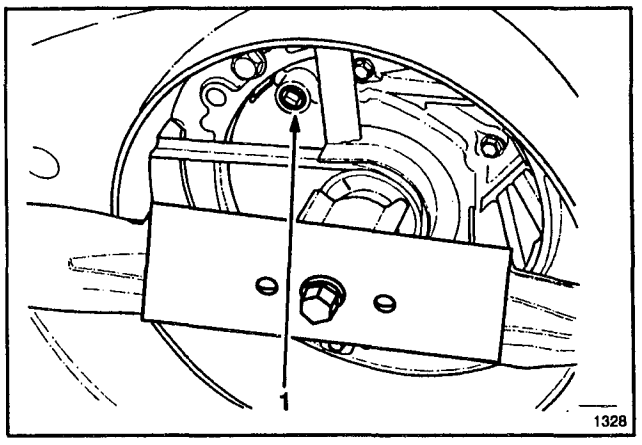

Figure 16

1. Drain opening

7. Lower mower allowing oil to drain into pan.
8. After draining, clean drain plug and reinstall it.
9. Turn mower upright.

10. Wipe up any spilled oil. Fill engine with fresh oil: refer to Fill Crankcase With Oil, page 7.

ADJUSTING THROTTLE

Throttle control adjustment may be required if engine does not start or stop. Whenever a new throttle control cable is installed, the throttle must be adjusted.

1. Stop engine and pull wire off spark plug (Fig. 7).

2. Remove (2) screws from engine cover and lift off cover (Fig. 17).

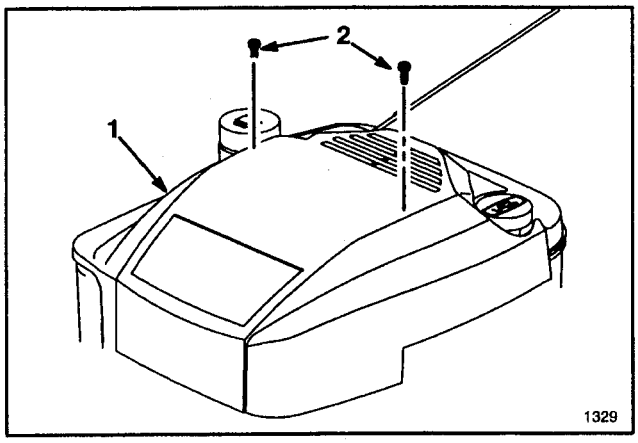

Figure 17

1. Cover
2. Screws (2)

3. Move throttle control forward to FAST position (Fig. 8).

4. Loosen cable clamp screw until throttle cable slides (Fig. 18).

5. Move throttle cable until throttle lever contacts stop (Fig. 18).

6. Tighten cable clamp screw to lock adjustment in place.

7. Reinstall engine cover with (2) screws.

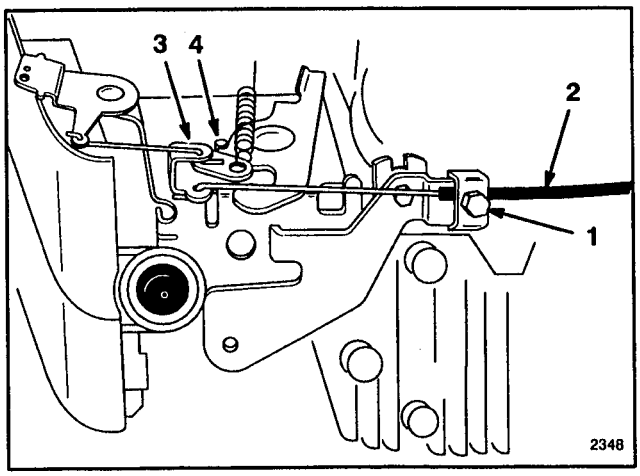

Figure 18

1. Cable clamp screw
2. Throttle cable
3. Throttle lever
4. Stop

ADJUSTING WHEEL TRACTION DRIVE (self–propelled model)

If mower does not self–propel or has a tendency to creep forward when drive is not engaged, an adjustment to the wheel traction control cable is necessary.

1. Stop the engine.

2. Rotate adjustment knob (Fig. 19) 1/2 turn clockwise to tighten drive belt or 1/2 turn counterclockwise to loosen belt. Hold control cable while rotating to prevent cable from turning.

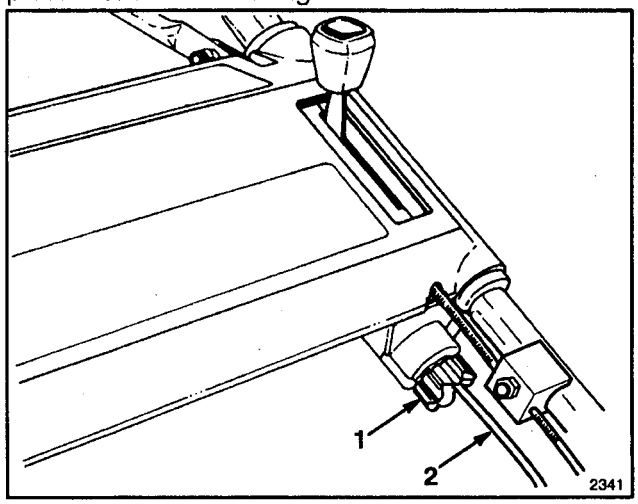

Figure 19

1. Adjustment knob
2. Control cable

3. To check traction adjustment, slowly squeeze the self-propel control bar toward the handle (Fig. 20). Adjustment is correct when:

- mower does not creep forward when traction is disengaged
- control bar is at a comfortable operating distance from the handle for operator's hand when disengaging and engaging the self-propelled drive.

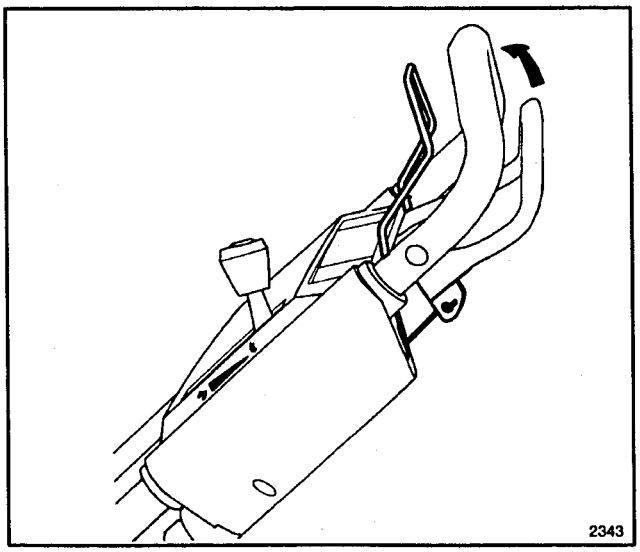

Figure 20

4. If loss of traction or improper engagement still occurs after readjustment, repeat steps 2–3 until properly adjusted.

ADJUSTING BRAKE CABLE

Whenever a new blade brake cable assembly is installed, an adjustment is required.

1. Stop engine. Pull wire off spark plug.
2. CHECK ADJUSTMENT (Fig. 21)–Move the blade control bar toward the handle until the slack in the wire is removed. The gap between the blade control bar and the handle must be 1/8".

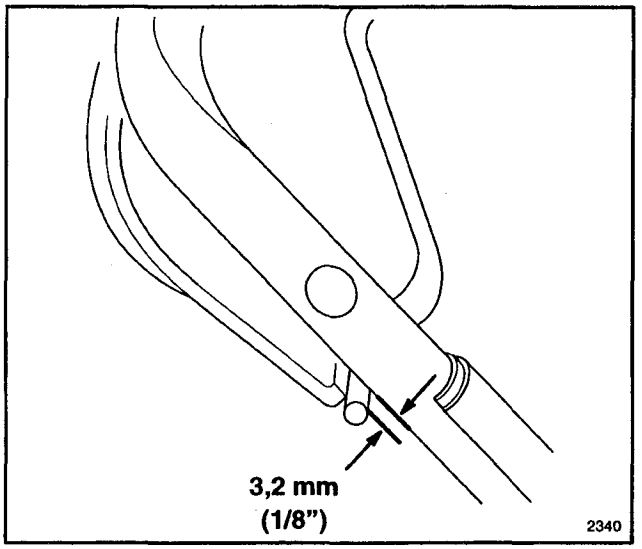

Figure 21

3. ADJUST CABLE (Fig. 22)–Loosen the nut on the cable bracket. Insert a 1/8" object between the brake control bar and handle. Pull down on the cable conduit until all slack is removed from the wire. Then tighten the nut on cable bracket.

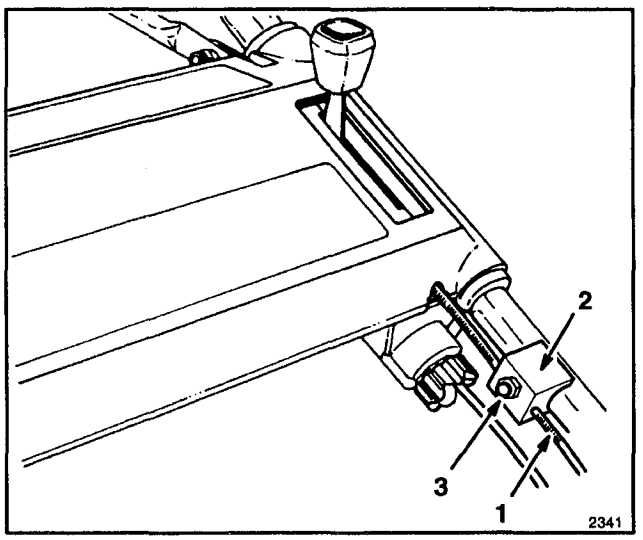

Figure 22

1. Cable conduit
2. Cable bracket
3. Nut

INSPECTING/REMOVING/SHARPENING BLADE

1. Stop engine and pull wire off spark plug (Fig. 7).
2. Drain gasoline from fuel tank; refer to Draining Gasoline, page 12.
3. Tip mower on its left side (Fig. 23). Avoid rotating blade as starting problems may result.

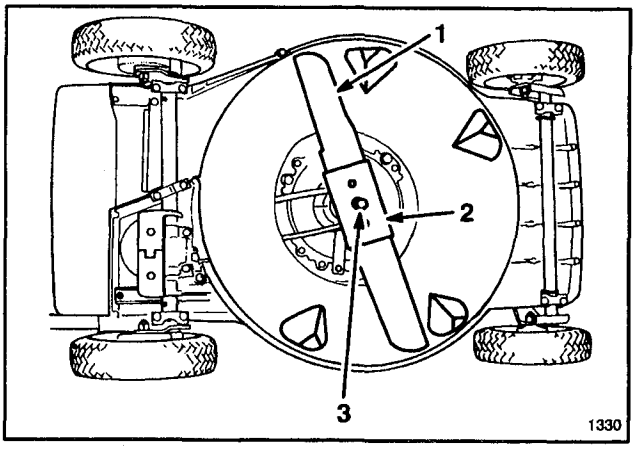

Figure 23

1. Blade
2. Blade stiffener
3. Blade bolt and lockwasher

4. INSPECTING BLADE—Carefully examine blade for sharpness and wear, especially where flat and curved parts meet (Fig. 24A). Since sand and abrasive material can wear away the metal that connects the flat and curved parts of the blade, check blade before using the mower. If a slot or wear is noticed, (Fig. 24B & C), replace blade with a new TORO blade. Refer to step 5.

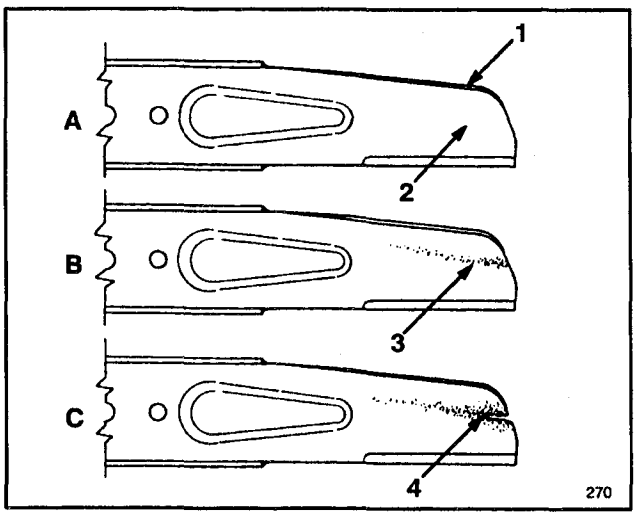

Figure 24

1. Sail
2. Flat part of blade
3. Wear
4. Slot formed

MAINTENANCE

Note: For optimum performance, install a new TORO blade before cutting season begins. During the year, file down small nicks to maintain the cutting edge.

⚠ DANGER

- **A worn or damaged blade could break and a piece of blade could be thrown into operator's or bystander's area.**
- **A thrown piece of blade could cause serious personal injury or death to operator or bystanders.**
- **Inspect blade periodically for wear or damage.**
- **Replace a worn or damaged blade.**

⚠ WARNING

- **Operating mower without stiffener in place could cause blade to flex, bend or break.**
- **A broken blade could cause serious injury or death to operator or bystanders.**
- **Do not operate mower without stiffener.**

5. REMOVING BLADE—Grasp end of blade using a rag or thickly padded glove. Remove blade bolt, lockwasher, blade and blade stiffener (Fig. 23).

6. SHARPENING BLADE—Using a file, sharpen top side of blade (side facing top of mower housing) and maintain original cutting angle (Fig. 25). The blade remains balanced if the same amount of material is removed from both cutting edges.

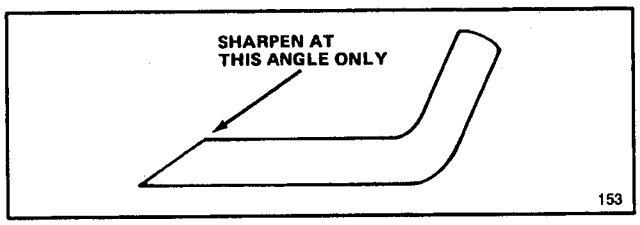

Figure 25

IMPORTANT: Check balance of blade by putting it on a blade balancer. An inexpensive balancer can be purchased at a hardware store. A balanced blade stays in a horizontal position and an unbalanced blade settles to the heavy side. If blade is not balanced, file more metal off cutting edge on heavy end of blade.

7. Install sharp, balanced TORO blade, blade stiffener, lockwasher and blade bolt. Sail part of blade must point toward top of mower housing to ensure correct installation. Tighten blade bolt to 68 N·m (50 ft–lb).

LUBRICATION

After every 25 operating hours or when season ends, front and rear wheels must be lubricated.

1. Apply 2 or 3 drops of light oil on inside and outside of all wheel bolts. Spin wheels to distribute oil into bushings. Wipe up excess oil.
2. SELF–PROPELLED MODEL—Drain gasoline; refer to Draining Gasoline, page 12.
3. Set mower to highest height-of-cut setting (E).
4. Tip mower on its left side. Wipe grease fittings with clean rag (Fig. 26). Install grease gun onto fitting and gently apply one or two pumps of #2 Multi–Purpose Lithium Base Grease.

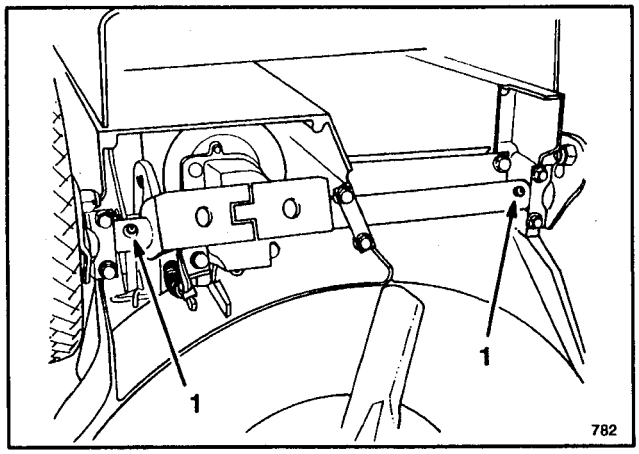

Figure 26

1. Grease fitting (self–propelled model)

CLEANING MOWER HOUSING

Underside of Mower Housing

To ensure best performance, keep underside of mower housing clean. Be especially careful to keep kickers free of debris (Fig. 28).

Washing Method

After every use, follow this procedure for washing debris out from the underside of the mower housing.

1. Position mower on a flat, concrete or asphalt surface near a garden hose.
2. Start the engine.
3. Hold a running garden hose at handle level and direct water to flow on ground just in front of right rear tire (Fig. 27). The rotating blade will draw water under the housing and wash out clippings. Let the water run for a few minutes or until you no longer see clippings being washed out from under housing.
4. Stop the engine.
5. Turn off the garden hose.
6. Restart mower and let it run for a few minutes to dry out moisture on the mower and its components.

MAINTENANCE

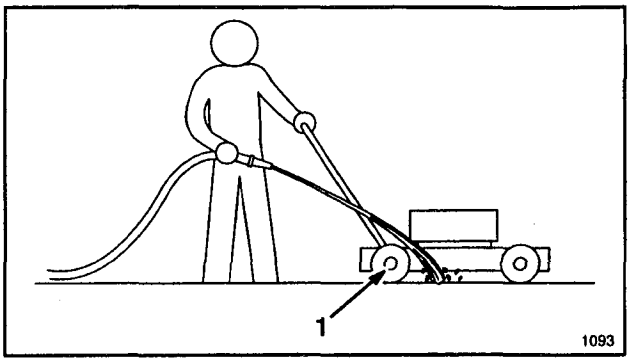

Figure 27

1. **Right rear wheel**

Scraping Method

If washing does not remove all debris from under deck, tip mower and scrape it clean.

1. Stop engine and pull wire off spark plug (Fig. 7).
2. Drain gasoline from fuel tank: refer to Draining Gasoline, page 12.
3. Tip mower on its left side (Fig. 28).
4. Remove dirt and grass clippings with a hardwood scraper. Avoid burrs and sharp edges.
5. Turn mower upright.
6. Refill gas tank.
7. Reconnect spark plug wire.

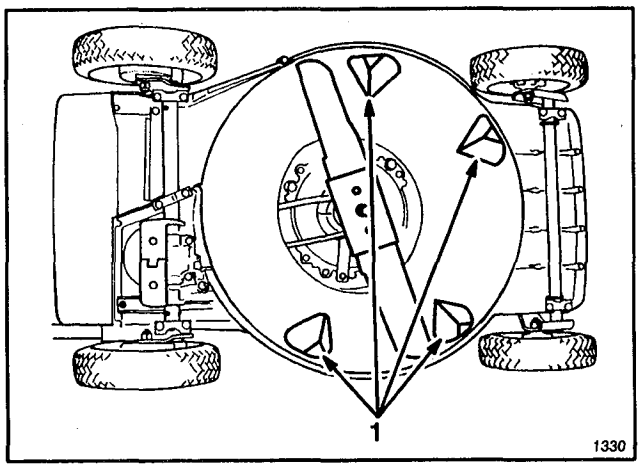

Figure 28

1. **Kickers**

PREPARING MOWER FOR STORAGE

1. For long term storage, it is recommended that gasoline be drained from fuel tank or use a fuel additive before storing. To drain gasoline, refer to Draining Gasoline, page 12. After fuel is drained, start engine and let it idle until all fuel is consumed and engine stops. If gasoline is not drained, gum–like varnish deposits will form and cause poor engine operation *or even starting problems.*

Fuel can be left in gas tank only if a fuel additive, such as Toro's Stabilizer/Conditioner, is added to gasoline and run through engine before storing. Toro's Stabilizer/Conditioner is a petroleum distillate based conditioner/stabilizer. Toro does not recommend stabilizers with an alcohol base, such as ethanol, methanol or isopropyl. Use fuel additive in recommended quantities as specified on container.

Under normal conditions, fuel additives remain effective in fuel for 6-8 months.

2. Drain oil: refer to Changing Crankcase Oil, page 12. After oil is drained, do not fill crankcase with oil until the following steps (3–10) are completed.
3. Remove spark plug and pour 30 ml (2 tablespoons) of SAE 30 oil into hole in cylinder. Pull starter rope slowly to coat inside of cylinder. Install spark plug and tighten to 20 N·m (15 ft–lb). **DO NOT INSTALL WIRE ON SPARK PLUG.**
4. Clean mower housing; refer to Cleaning Mower Housing, page 15.
5. Check condition of blade; refer to Inspecting/Removing/Sharpening Blade, page 14.
6. Tighten all nuts, bolts, and screws.
7. Clean dirt, chaff, grass clippings, and grime from external parts of the engine, shrouding, and top of mower housing.
8. Clean air cleaner; refer to Servicing Air Cleaner, page 12.
9. Lubricate the wheels; refer to Lubrication, page 15.
10. Touch up all rusted or chipped paint surfaces. Toro Re–Kote paint is available from an Authorized TORO Service Dealer.
11. Fill crankcase with oil; refer to Fill Crankcase With Oil, page 7.
12. Store mower in a clean, dry place. Cover mower to keep it clean and protected.

PRODUCT IDENTIFICATION

A model and a serial number decal is located on top right side of mower housing, near the discharge door. Always refer to specific numbers on this decal in correspondence or when replacement parts are needed.

TORO SERVICE SUPPORT

If help – concerning safety, set–up, operation, maintenance, or troubleshooting – is ever needed, contact the local Authorized TORO Service Dealer or Distributor. In addition to skilled service technicians, the dealer and distributor have factory approved accessories and replacement parts. Keep your Toro all TORO. Buy genuine TORO replacement parts and accessories.

MAINTENANCE RECORD

Date	Hours Used	Oil Change	Air Cleaner Service	Lubrication	Spark Plug	Winter Storage	Notes:


TORO®