Form No. 3405-391 Rev A

TORO®

Count on it.

Parts Catalog

CCR™ 6053

ES Quick Clear Snowthrower

Model No. 38568—Serial No. 400000000 and Up

Register at www.Toro.com.
Original Instructions (EN)

CE

3405-391 A

Ordering Replacement Parts

To order replacement parts, please supply the part number, the quantity, and the description of each part desired.

Understanding Reference Numbers

Each identified part in an illustration has a reference number. The reference number for a part also appears in the parts list, along with other information about the part.

This catalog uses two special reference number formats, one to indicate parts in a service assembly and another to indicate the quantity of a given part in an illustration.

Service Assembly Reference Numbers

Parts in service assemblies have reference numbers in the form a:b. The a represents the reference number of the entire service assembly and the b represents a sequential number unique to each part within the service assembly.

For example, a wheel assembly might be identified by reference number 6, the tire by 6:1, the valve by 6:2, and the wheel by 6:3. When you order the assembly identified by reference number 6, you receive all parts identified by reference numbers 6:1,6:2, and 6:3. However, you may also order any part individually. Reference numbers of this type appear in illustration and in parts lists.

Reference Numbers Indicating Quantity

In an illustration, if a reference number indicates more than one part, the reference number has the form nX y. The n represents the quantity of the part, the X is the multiplication symbol, and the y represents the reference number.

For example, in an illustration, the reference number 2X 37 means that two of the parts identified by reference number 37 are indicated.

Contents

Main Frame, Lower Chute and Wheel Assembly 4
Rotor Drive Assembly 6
Rotor Assembly 8
Engine Assembly 10
Engine Assembly No. 2 12
Engine Assembly No. 3 14
Engine Assembly No. 4 16
Shroud Assembly 18
Chute Control Assembly 20
Handle Assembly 22
Slider Track Assembly 24
Attachments and Accessories 26

© 2018—The Toro® Company
8111 Lyndale Avenue South
Bloomington, MN 55420

Contact us at www.Toro.com.
Printed in the USA.
All Rights Reserved

Main Frame, Lower Chute and Wheel Assembly

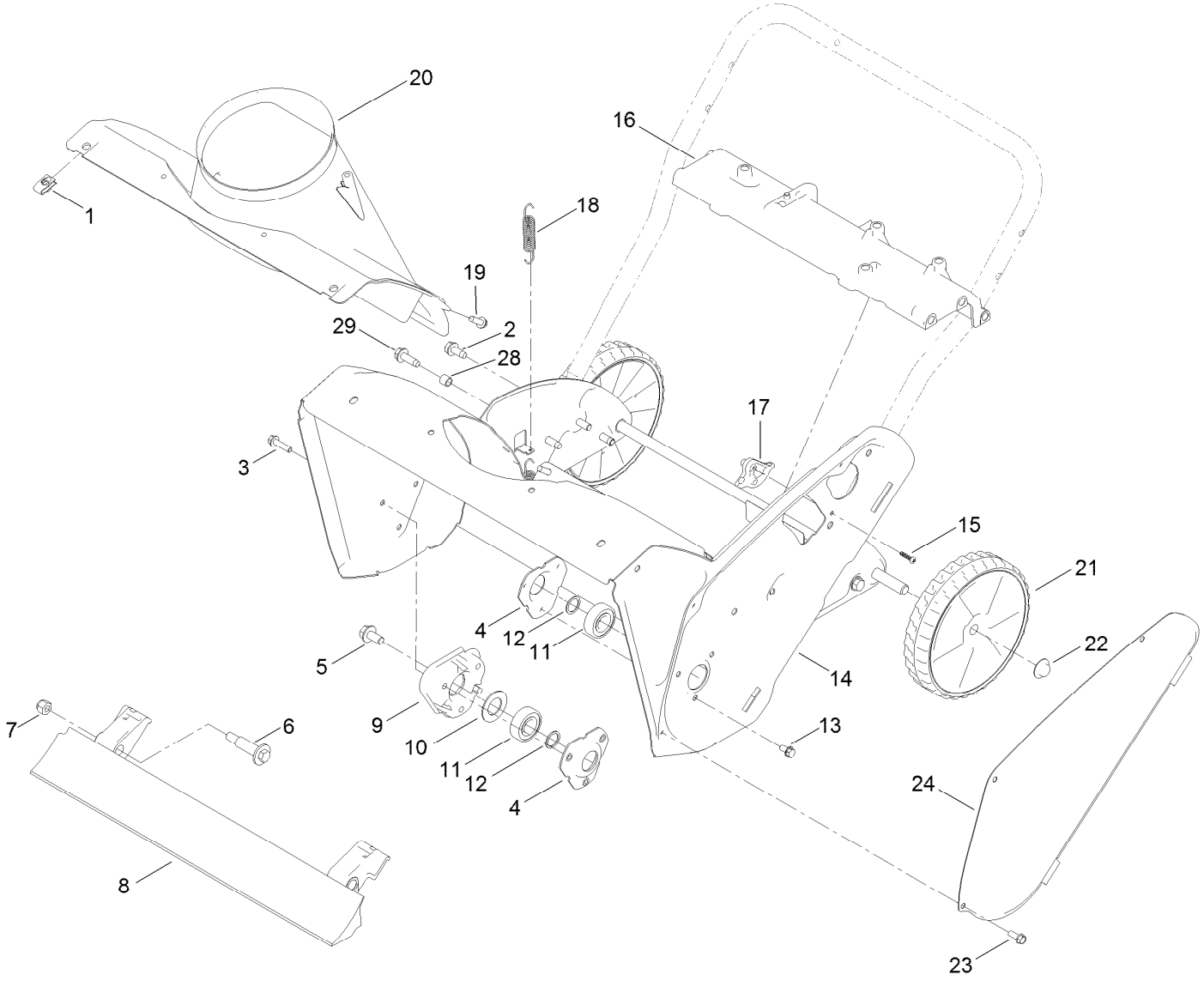

Main Frame, Lower Chute and Wheel Assembly (continued)

Ref.	Part Number	Qty.	Description
1	107069	2	Clip
2	137-3044	4	Screw-Thd Roll, HWH
3	32144-86	3	Screw-HWHTF
4	136-7134	2	Flange-Bearing
5	110-9380	1	Screw-HWH
6	136-7198	2	Bolt-Shoulder
7	137-3087	2	Nut-Hex
8	133-5585	1	Blade-Scraper
9	114-3781	1	Spacer-Bearing, RH
10	110-9353	1	Washer-Rubber
11	100-1048	2	Bearing-Ball
12	52-7280	2	Washer-Thrust
13	32144-4	3	Screw-HWH
14	108-4868-03	1	Housing-Auger
15	94-4496	1	Screw-PPH
16	130-9765	1	Brace-Frame
17	108-4919	1	Guide-Cable, Clutch
18	108-4906	2	Spring-Extension
19	137-3099	3	Screw-Plastite, HWH
20	108-4871	1	Chute-Lower
21	117-2309	2	Wheel ASM
22	32112-14	2	Nut-Push
23	32144-85	3	Screw-HWH
24	108-4893-03	1	Cover-Belt
28	136-7148	2	Spacer-Grommet
29	136-7174	2	Screw-Thd Roll, HWH

Rotor Drive Assembly

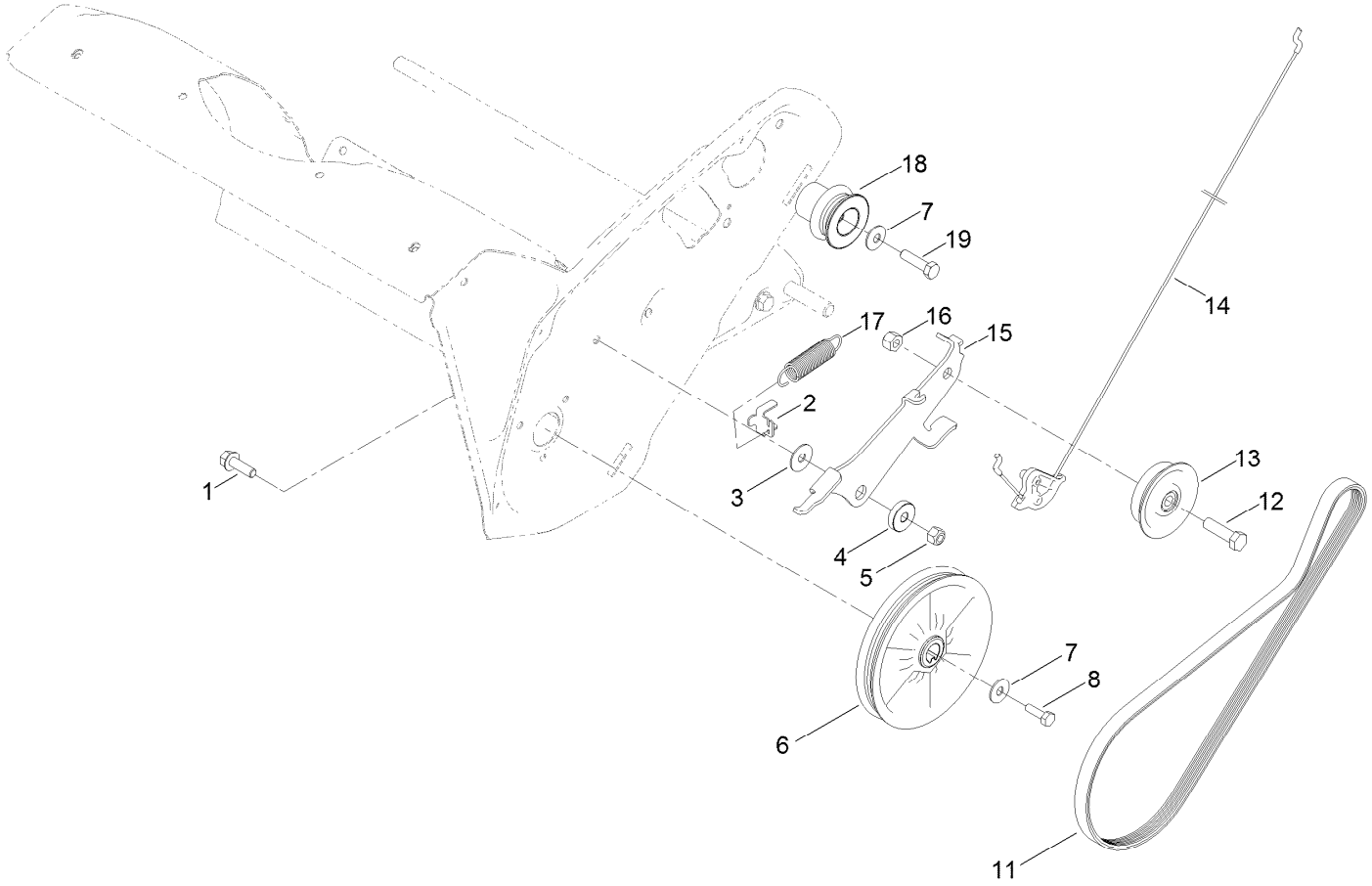

Rotor Drive Assembly (continued)

Ref.	Part Number	Qty.	Description
1	137-3067	1	Screw-HHF
2	136-7133	1	Clip-Spring
3	108-4925	1	Washer
4	108-4916	1	Bushing-Pivot
5	119-4038	1	Nut-Hex
6	121-6624	1	Pulley
7	3290-456	2	Washer-Belleville
8	137-3003	1	Screw-HH,Lock
11	121-6622	1	Belt-Drive
12	137-3065	1	Screw-HH
13	114-3785	1	Pulley-Idler
14	115-5682	1	Cable-Clutch
15	136-7138	1	Arm-Idler
16	137-3047	1	Nut-Hex
17	121-6630	1	Spring-Extension
18	125-7927	1	Pulley-Engine
19	137-3021	1	Screw-HH Lock

Rotor Assembly

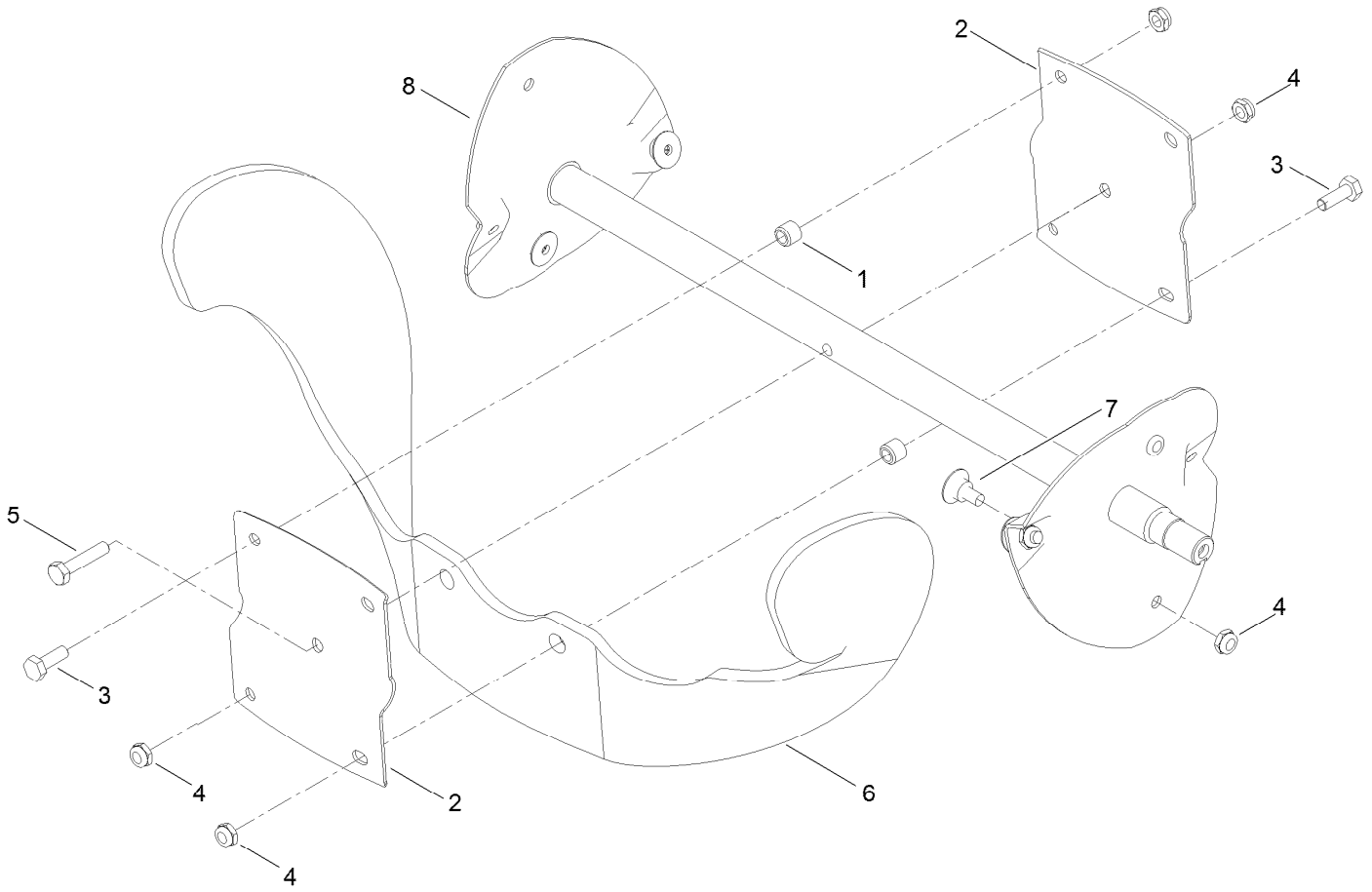

Rotor Assembly (continued)

Ref.	Part Number	Qty.	Description
1	55-9370	4	Spacer-Blade, Rotor
2	66-6600-03	2	Half-Rotor
3	137-3042	4	Screw-HH
4	137-3091	13	Nut-Hex
5	137-3049	1	Screw-HH
6	99-9313	2	Blade-Rotor
7	136-7182	8	Screw-Countersunk, Oval
8	131-6490	1	Rotor Kit

Engine Assembly

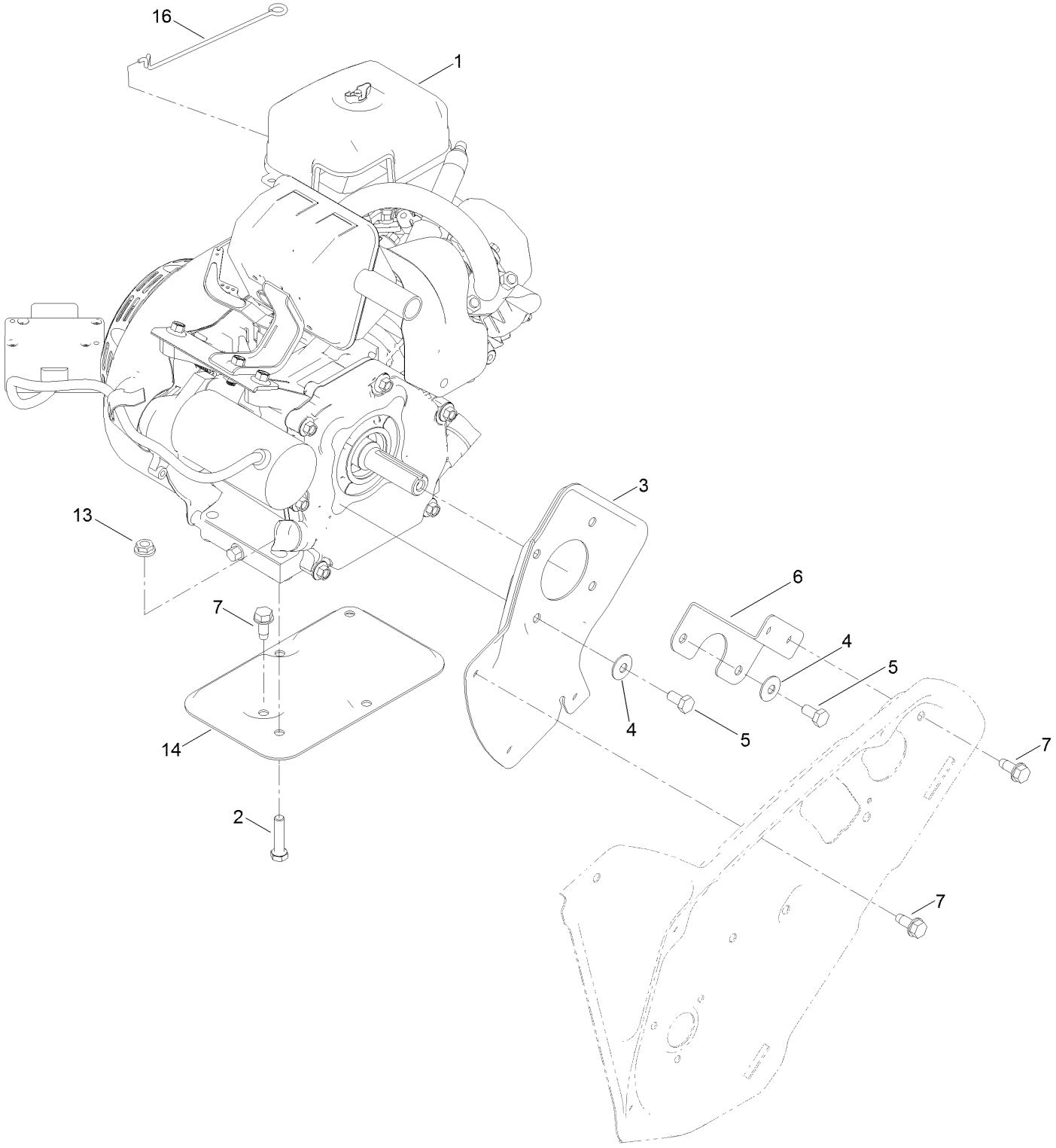

Engine Assembly (continued)

Ref.	Part Number	Qty.	Description
1	121-4226	1	Engine-170Fds-2
2	137-3051	2	Screw-HH
3	108-4892-03	1	Plate-Engine, PTO
4	3290-456	4	Washer-Belleville
5	137-3097	4	Screw-HH
6	110-9354-03	1	Support-Engine, Side
7	137-3044	7	Screw-Thd Roll, HWH
13	137-3039	2	Nut-HF
14	117-6037-03	1	Support-Engine
16	136-7140	1	Link-Choke

Engine Assembly No. 2

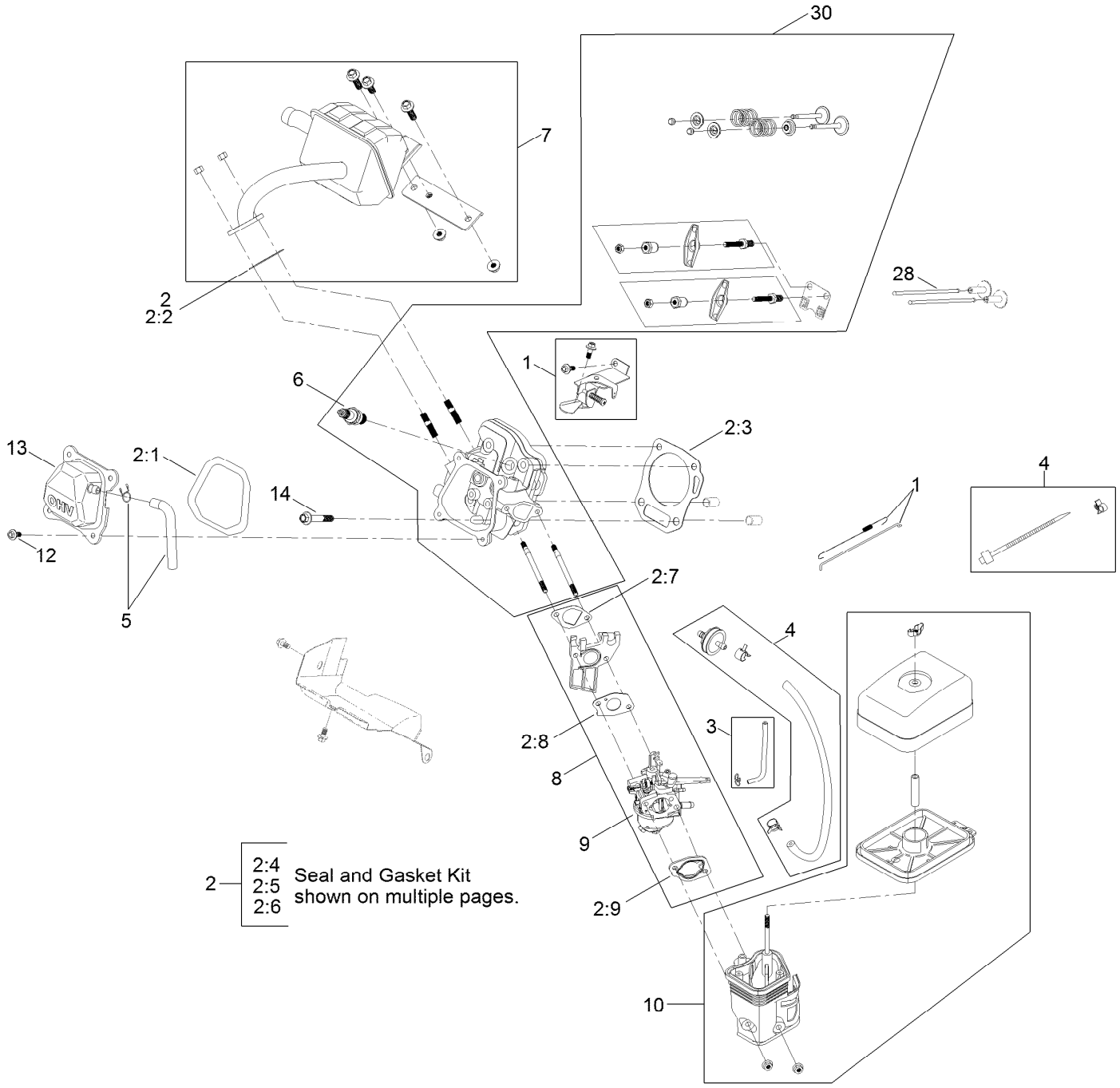

Engine Assembly No. 2 (continued)

Ref.	Part Number	Qty.	Description
1	136-7765	1	Governor Kit
2	127-9001	1	Gasket And Seal Kit
2:1	121-0109	1	Gasket-Cover, Valve
2:2	121-0167	1	Gasket-Exhaust
2:3	127-9000	1	Gasket-Head, Cylinder
2:4	121-0208	1	Seal-Oil
2:5	121-0209	1	Seal-Oil
2:6	121-0105	1	Gasket-Cover, Crankcase
2:7	121-0076	1	Gasket-Carburetor
2:8	121-0078	1	Gasket-Carburetor
2:9	121-0080	1	Gasket-Carburetor
3	127-9376	1	Primer Line Kit
4	121-4299	1	Fuel Line Kit
5	119-1921	1	Breather Tube Kit
6	119-1901	1	Plug-Spark
7	121-4297	1	Muffler Kit
8	127-9008	1	Carburetor Kit
9	127-9089	1	Carb Repair Kit With Gaskets
10	121-4282	1	Heater Box Kit
12	120-4454	4	Screw-HHF
13	121-0499	1	Valve Cover ASM
14	121-4110	4	Screw-HHF
28	121-4121	2	Rod-Push
30	133-9839	1	Complete Head ASM
99	127-9037	1	High Altitude Kit ●

● Not illustrated

Engine Assembly No. 3

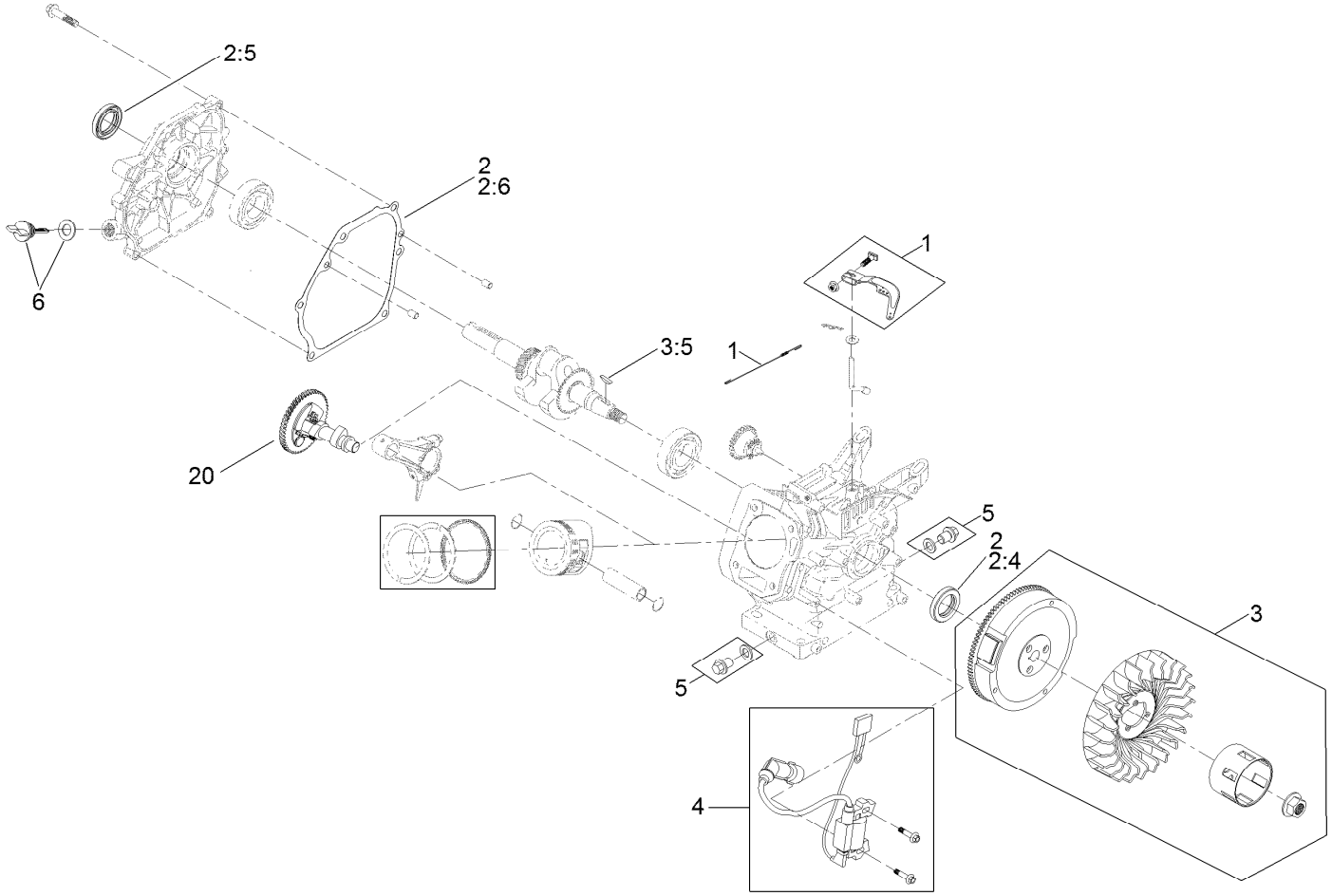

Engine Assembly No. 3 (continued)

Ref.	Part Number	Qty.	Description
1	136-7765	1	Governor Kit
2	127-9001	1	Gasket And Seal Kit
2:1	121-0109	1	Gasket-Cover, Valve ●
2:2	121-0167	1	Gasket-Exhaust ●
2:3	127-9000	1	Gasket-Head, Cylinder ●
2:4	121-0208	1	Seal-Oil
2:5	121-0209	1	Seal-Oil
2:6	121-0105	1	Gasket-Cover, Crankcase
2:7	121-0076	1	Gasket-Carburetor ●
2:8	121-0078	1	Gasket-Carburetor ●
2:9	121-0080	1	Gasket-Carburetor ●
3	127-9006	1	Flywheel Kit
3:5	120-4320	1	Key-Woodruff
4	136-7766	1	Ignition Kit
5	119-1923	2	Drain Plug Kit
6	127-9374	1	Dipstick And O-Ring Kit
20	133-9836	1	Camshaft

● Not illustrated

Engine Assembly No. 4

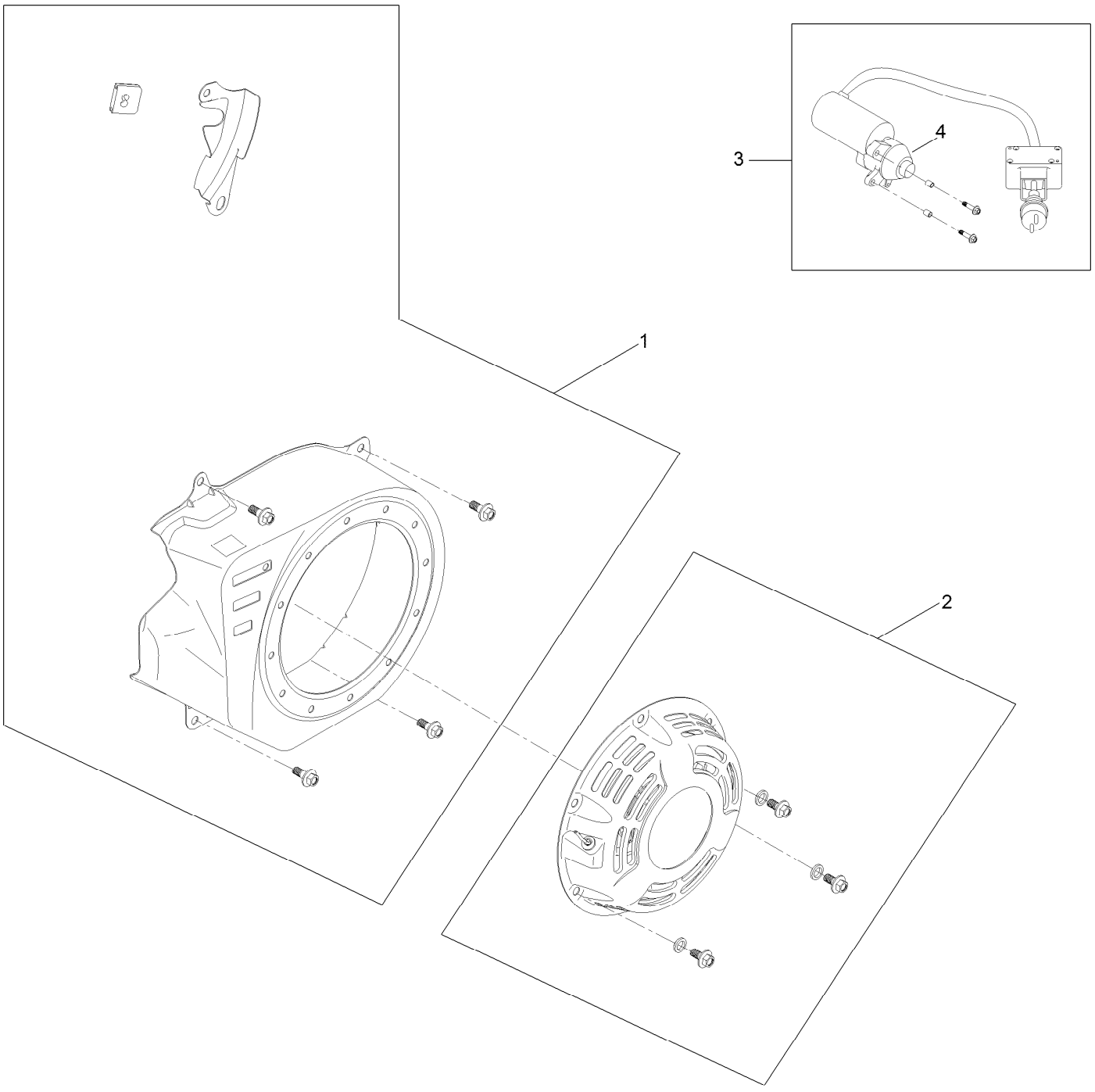

Engine Assembly No. 4 (continued)

Ref.	Part Number	Qty.	Description
1	127-9012	1	Blower Shroud Kit
2	121-4252	1	Recoil Kit
3	136-7768	1	Electric Starter Kit
4	119-1956	1	Pinion Kit

Shroud Assembly

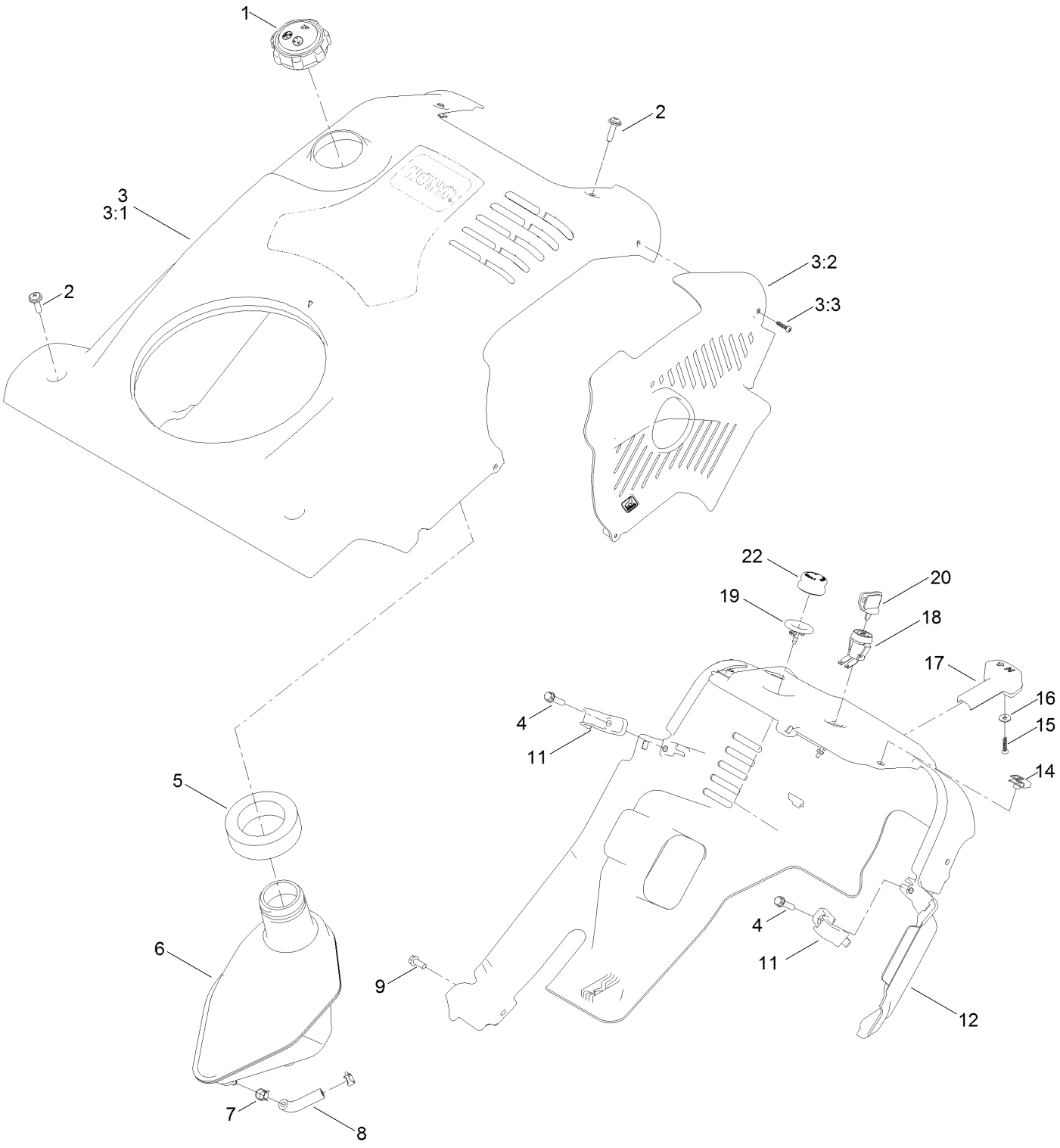

Shroud Assembly (continued)

Ref.	Part Number	Qty.	Description
1	138-3624	1	Cap-Gas
2	137-3013	4	Screw-PPH, Sems
3	133-5542	1	Shroud ASM
3:1	133-5543	1	Shroud
3:2	117-6035	1	Baffle-Exhaust
3:3	94-4496	1	Screw-PPH
4	137-3100	2	Screw-Plastite, HWH
5	114-3773	1	Seal-Tank
6	120-9848	1	Tank-Fuel, Gas
7	2412-98	2	Clamp-Hose
8	109-0660	1	Hose-Fuel
9	32144-85	1	Screw-HWH
11	108-4947	2	Clip-Shroud
12	117-6036	1	Shroud-Lower
14	107069	2	Clip
15	94-4496	1	Screw-PPH
16	137-3079	1	Washer-Plain
17	117-9100	1	Knob-Choke
18	40-5940	1	Switch
19	44-2750	1	Body-Primer
20	63-8360	1	Key-Ignition
22	66-7460	1	Bulb-Primer

Chute Control Assembly

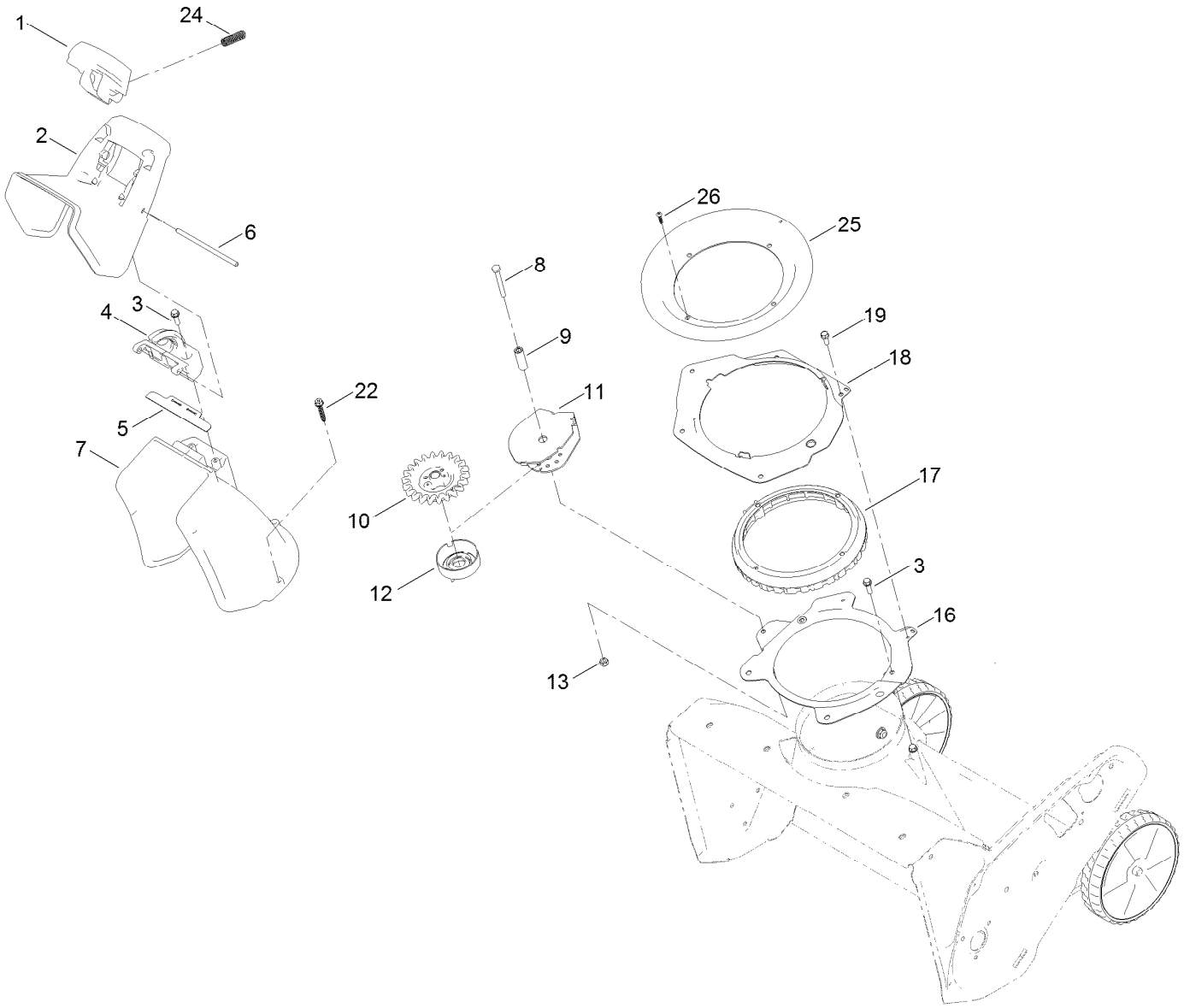

Chute Control Assembly (continued)

Ref.	Part Number	Qty.	Description
1	108-4941	1	Trigger-Deflector
2	117-9121	1	Deflector-Chute, CE
3	137-3099	6	Screw-Plastite, HWH
4	108-4942	1	Hinge-Ratchet, Deflector
5	114-3790	1	Seal-Deflector
6	136-8672	1	Hinge Pin-Deflector
7	108-4939	1	Chute
8	137-3034	1	Screw-HH
9	108-4877	1	Spacer-Sleeve, Pinion
10	108-4875	1	Pinion-Gear
11	108-4900-03	1	Bracket-Pinion
12	114-3792	1	Retainer-Cable
13	137-3088	1	Nut-Hex
16	108-4883-03	1	Ring-Support, Chute
17	108-4882	1	Ring-Chute, Gear
18	108-4874-03	1	Retainer-Ring, Chute
19	32144-85	2	Screw-HWH
22	137-3012	3	Screw-Plastite, HWH
24	136-7136	2	Spring-Compression
25	114-3772	1	Seal-Ring, Chute
26	94-4496	1	Screw-PPH

Handle Assembly

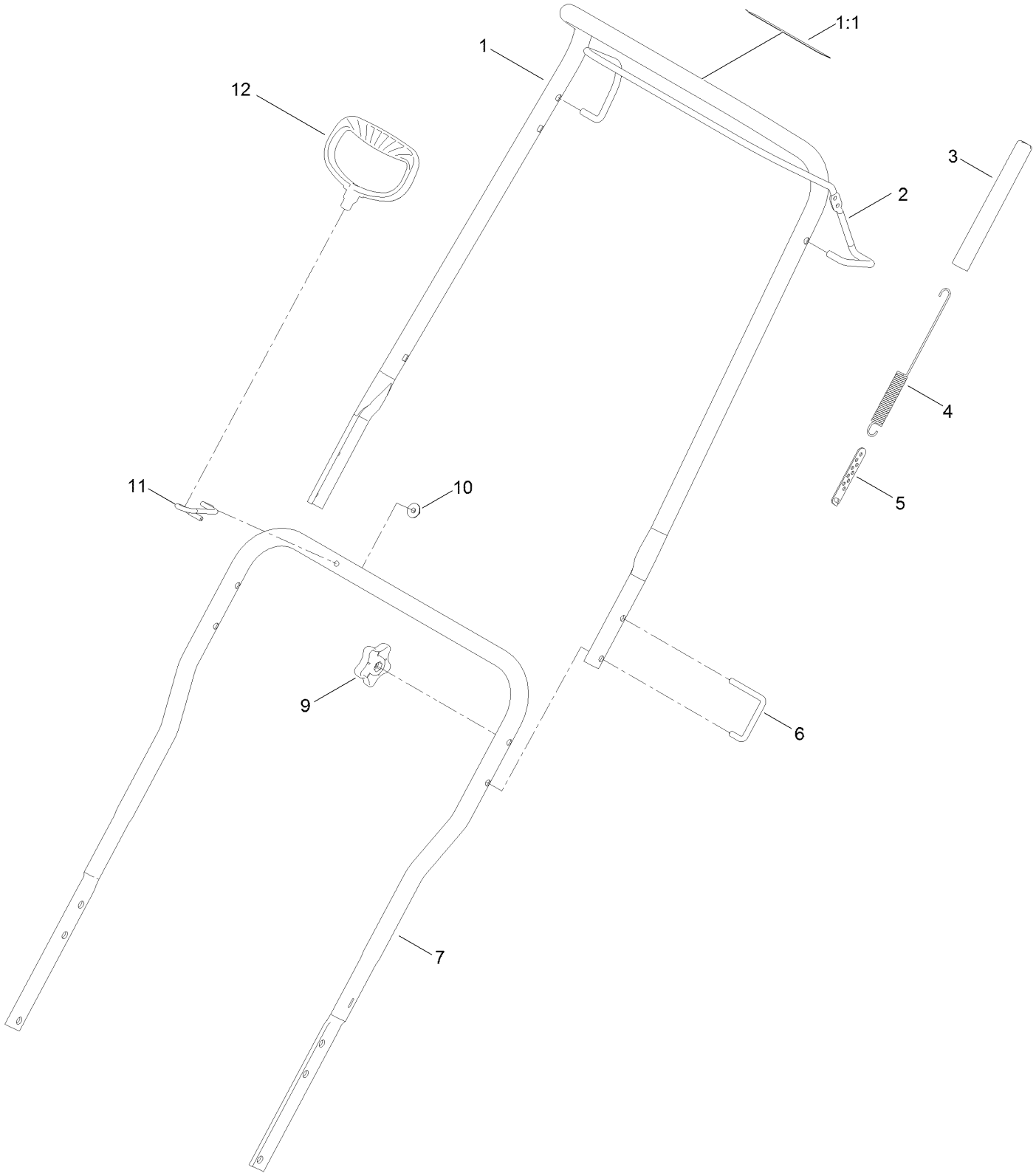

Handle Assembly (continued)

Ref.	Part Number	Qty.	Description
1	114-3768	1	Upper Handle ASM
1:1	94-2577	1	Decal-Drive, Rotor
2	114-3780-03	1	Bail-Control
3	114-3796	1	Cover-Spring
4	125-1148	1	Spring-Extension, Clutch
5	136-7126	1	Adjuster-Clutch Cable
6	136-7130	2	Lock-Handle
7	127-5956-03	1	Handle-Lower
9	114-3779	2	Knob-Handle
10	137-3016	1	Nut-HF
11	136-7135	1	Guide-Rope
12	117-9104	1	Handle-Recoil

Slider Track Assembly

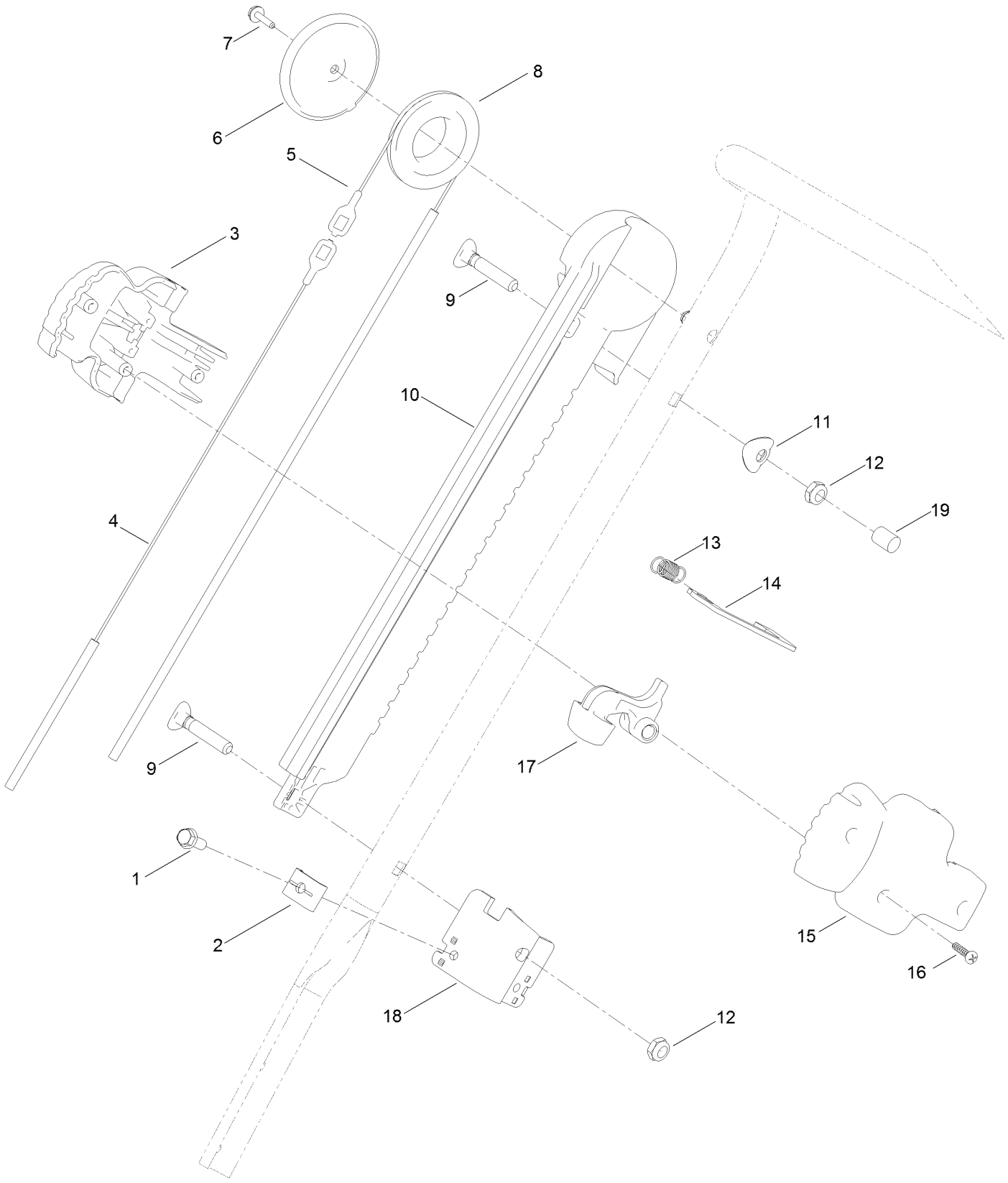

Slider Track Assembly (continued)

Ref.	Part Number	Qty.	Description
1	32144-85	2	Screw-HWH
2	136-7191	2	Clamp-Cable
3	108-4912	1	Handle-Slider, RH
4	108-4897	1	Cable-Chute, Short
5	108-4898	1	Cable-Chute, Long
6	108-4931	1	Cover-Pulley
7	137-3110	1	Screw-Plastite, HWH
8	108-4907	1	Pulley-Slider
9	137-3008	2	Screw-Handle
10	108-4899	1	Track-Slider
11	137-3009	1	Washer-Cup
12	137-3089	2	Nut-Hex
13	108-4914	1	Spring-Trigger
14	136-7131	1	Lock Plate-Chute
15	108-4911	1	Handle-Slider, LH
16	94-4496	3	Screw-PPH
17	108-4913	1	Trigger
18	136-7132	1	Bracket-Cable
19	125-7943	1	Cap-Thread, Screw

Attachments and Accessories

For 38568 CCR 6053 ES Quick Clear Snowthrower

Product Name	Model/Part
High-Altitude Kit	127-9037
Engine Maintenance Kit	138-0699
Long Life Rotor Blade Kit	38205
Paddle Replacement Kit	38261
Case of 24 20-Ounce Bottles 5W30 Winter Oil	38908
Toro Snow Oil 0W30 Synthetic 20-Ounce Bottle	38913

Notes:



Count on it.