FORM NO. 3317–908 Rev. A GB

TORO®

53cm Recycler®

Walk Power Mower

Model No. 20767–6900001 & Up
Model No. 20768–6900001 & Up

Operator's Manual

Figures

1

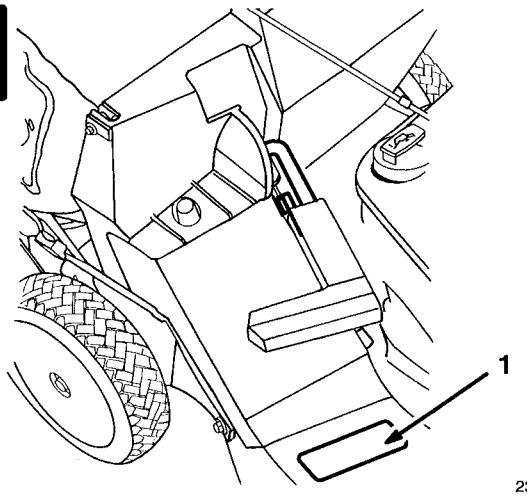

2302

1. Model and serial number engraved in mower housing

2

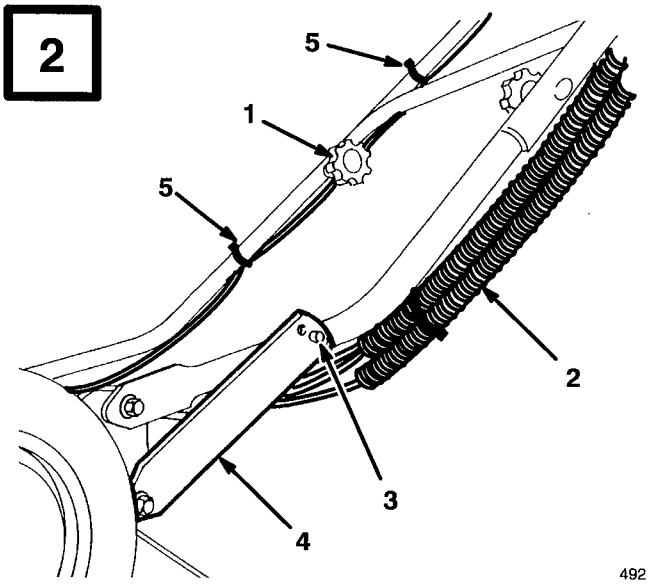

492

1. Handle knob
2. Control cable
3. Handle stud
4. Handle latch
5. Cable tie

3

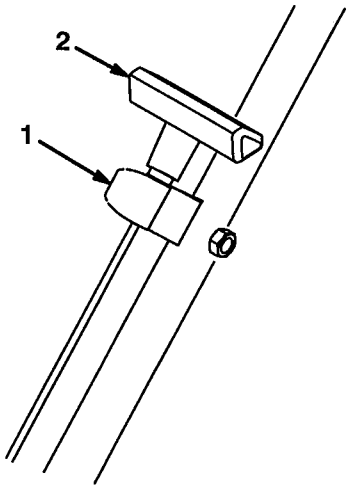

1600

1. Rope guide
2. Starter rope

4

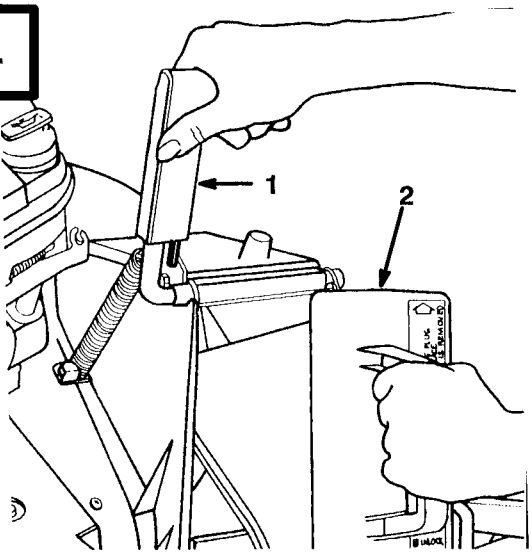

1914

1. Discharge door handle
2. Plug rotated clockwise

©The Toro Company – 1995, Rev. 1996
All Rights Reserved

Printed in USA

5

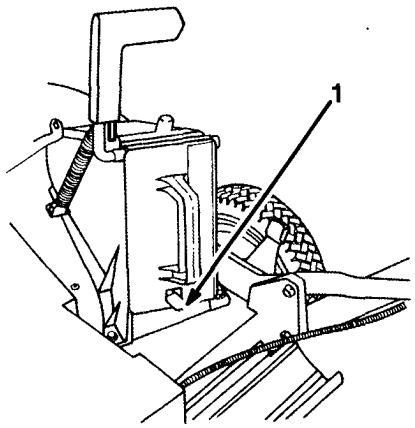

1915

1. Spring clip

6

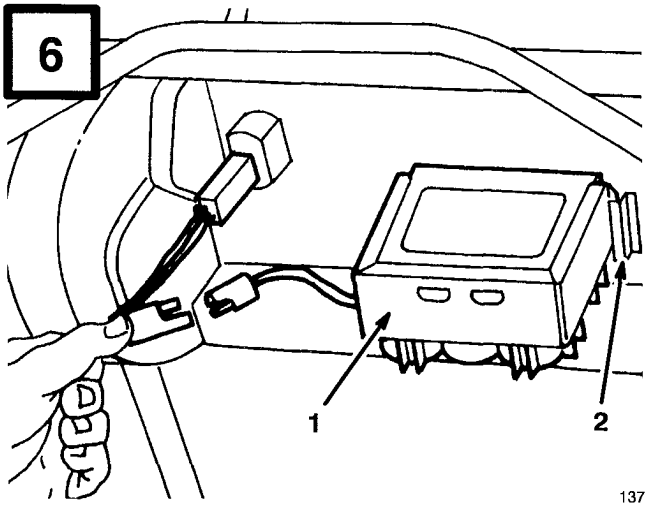

137

1. Battery
2. Mounting tab

7

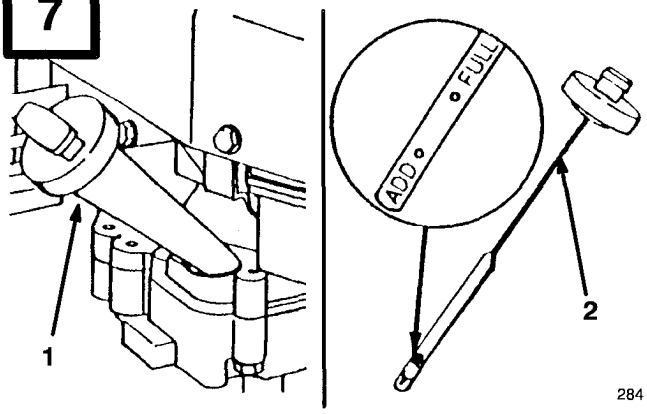

284

1. Oil fill tube
2. Dipstick

8

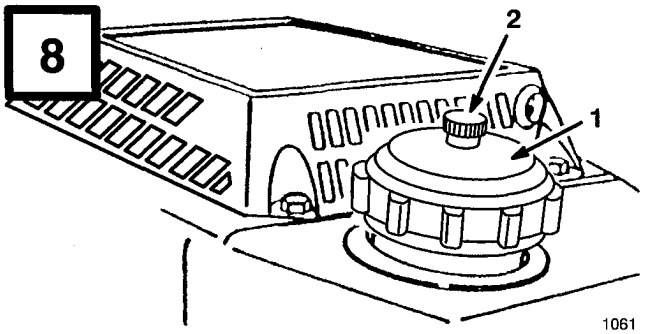

1061

1. Fuel tank cap
2. Vent screw

9

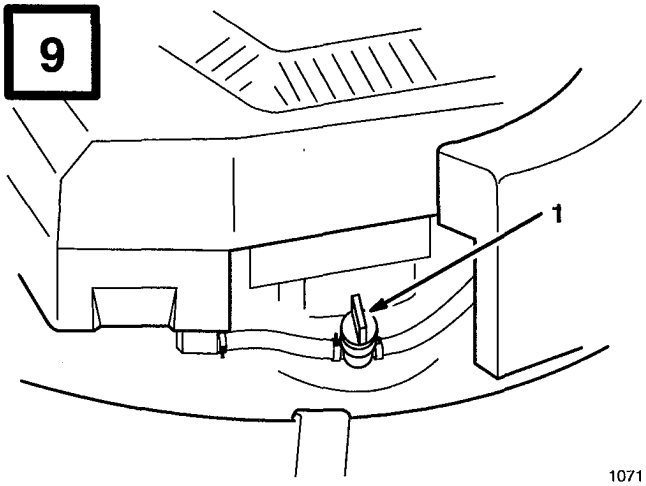

1071

1. Fuel shut-off valve

10

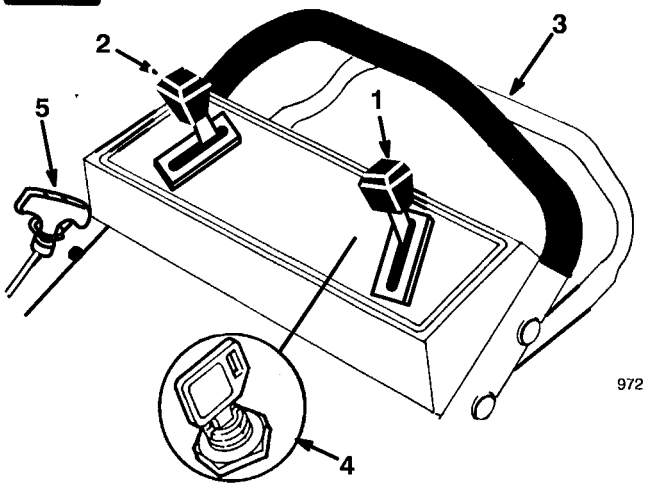

972

1. Throttle control
2. Ground speed control
3. Self-propelled control bar
4. Key switch*
5. Recoil starter

* electric start model

11

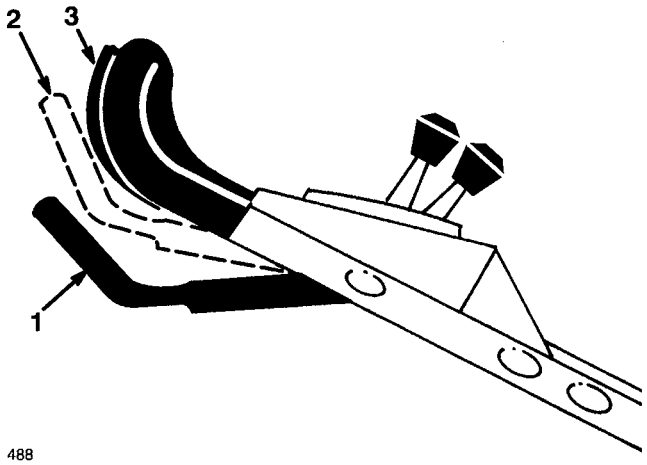

488

1. Control bar
2. RUN/SHIFT position
3. DRIVE position

12

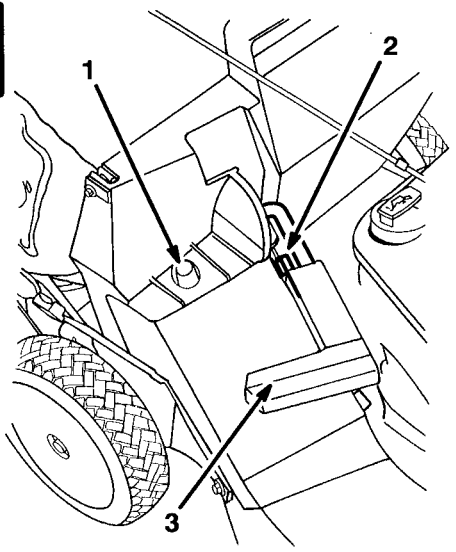

1912

1. Bag frame on retaining post
2. Pin contacting catch
3. Handle fully forward. Discharge door closed.

13

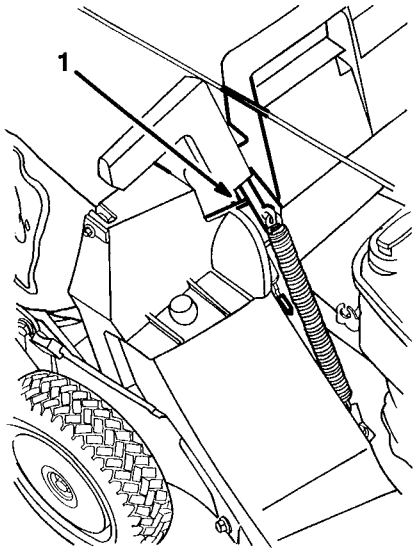

1913

1. Pin locked in bag notch

14

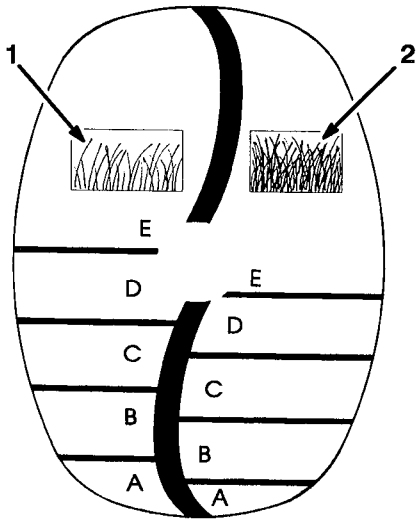

971

1. Sparse/normal grass cutting scale
2. Lush grass cutting scale

15

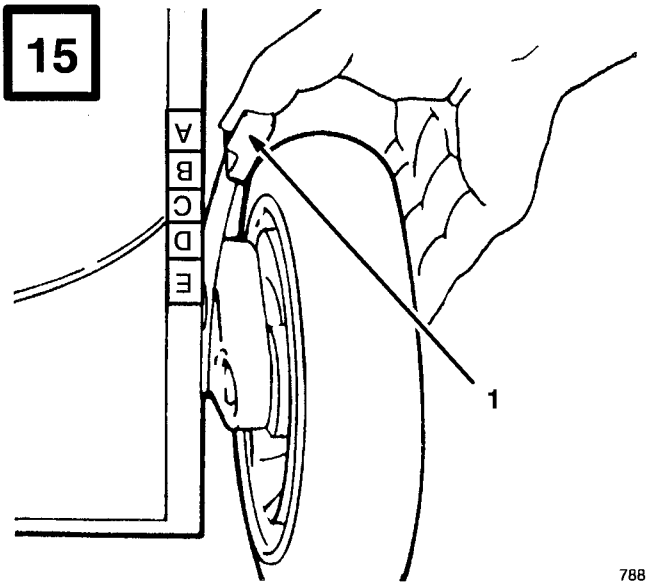

788

1. Height-of-cut lever

16

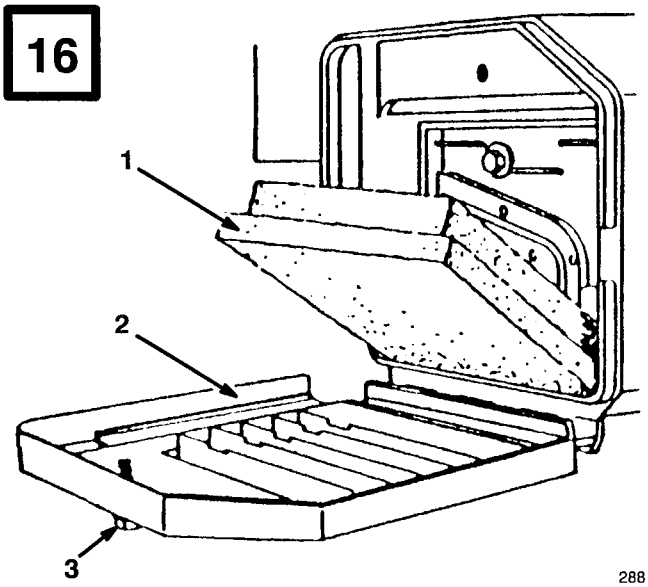

288

1. Foam element
2. Cover
3. Knob

17

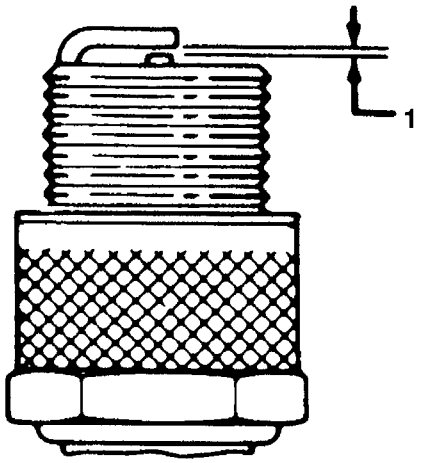

1. 0.030"

18

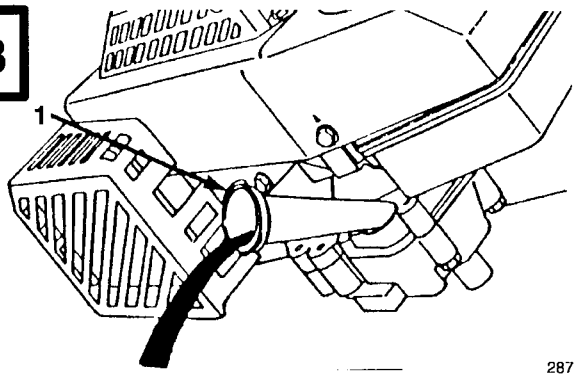

287

1. Oil fill tube

19

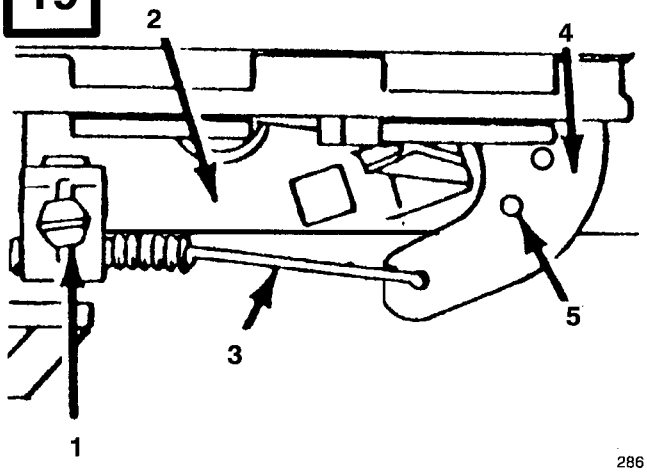

286

1. Cable clamp screw
2. Throttle bracket
3. Throttle cable
4. Throttle lever
5. Aligned holes

20

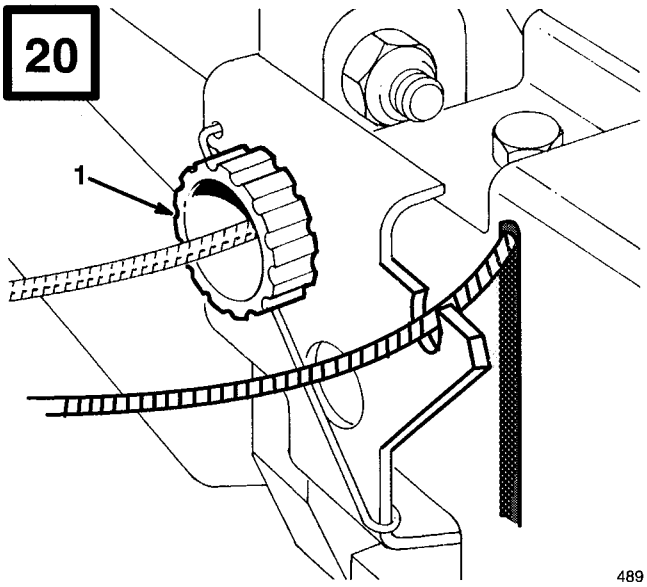

489

1. Control knob

21

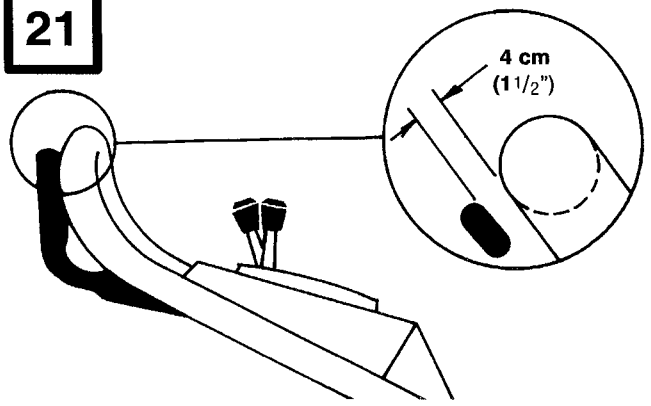

22

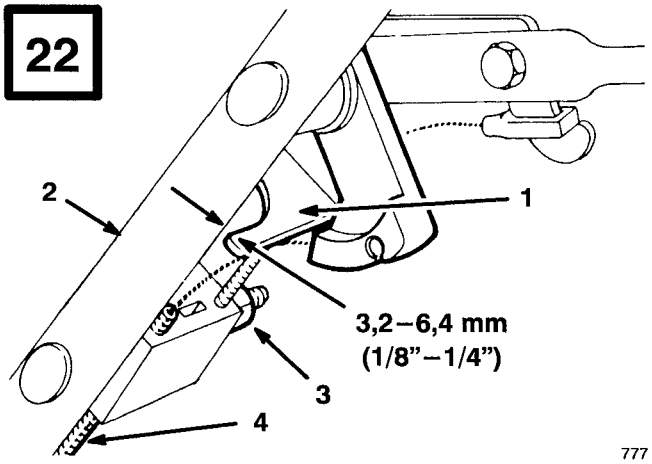

777

1. Brake lever
2. Handle
3. Nut
4. Cable conduit

23

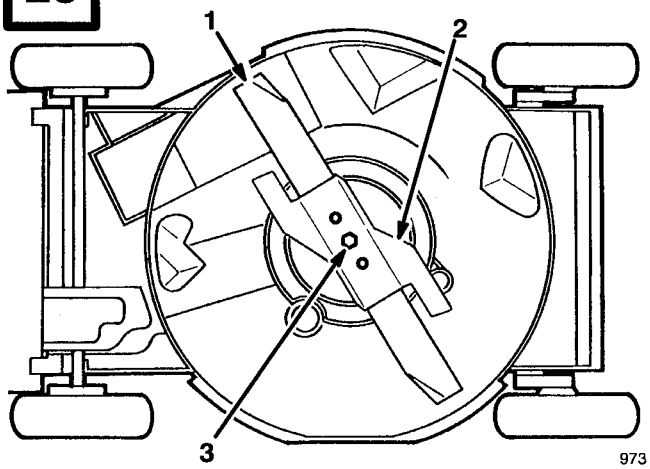

973

1. Blade
2. Accelerator
3. Blade bolt

24

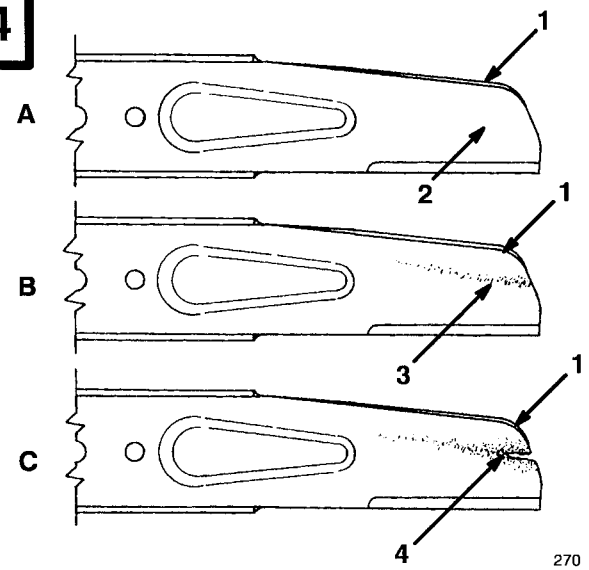

270

1. Sail
2. Flat part of blade
3. Wear
4. Slot formed

25

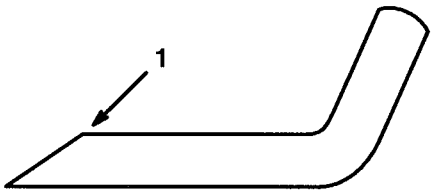

153

1. Sharpen at this angle only

26

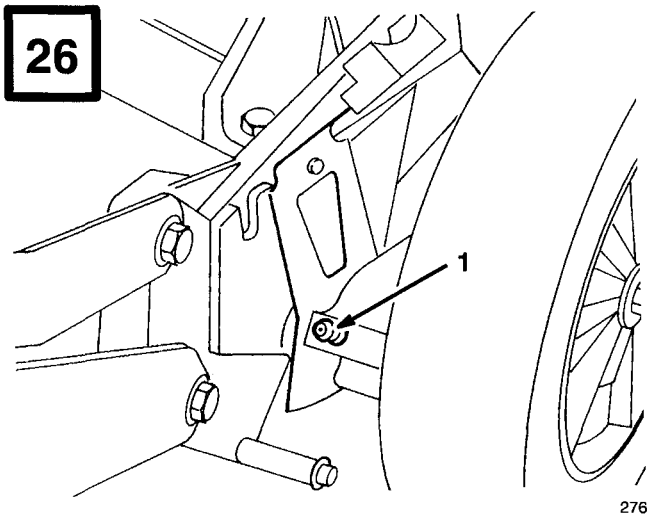

276

1. Grease fitting

27

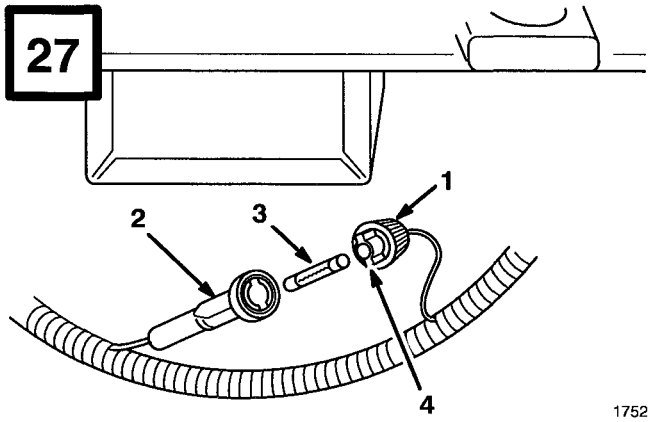

1752

1. Fuse holder cap
2. Fuse holder bottom
3. Fuse
4. Tab (2)

28

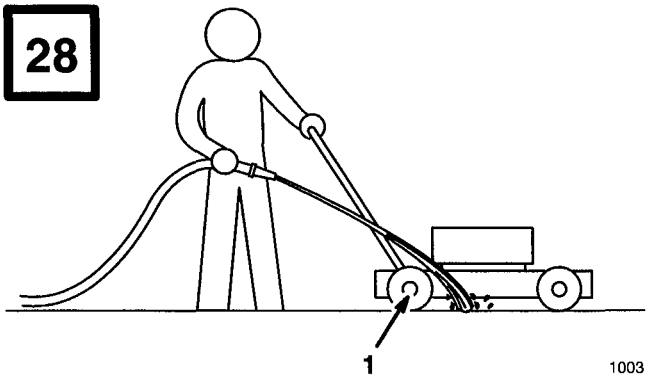

1003

1. Right rear wheel

29

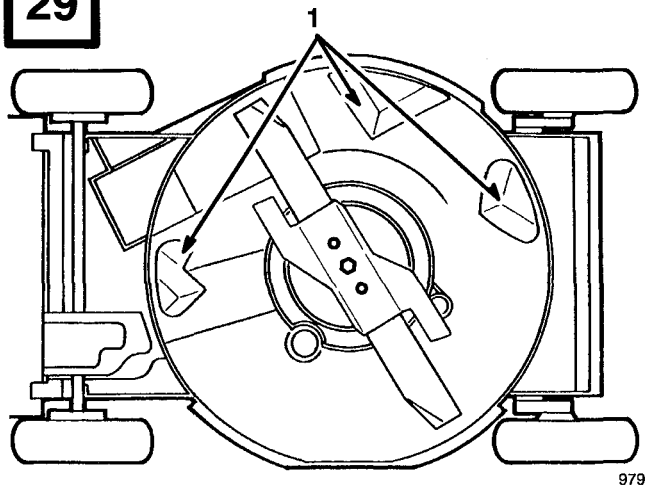

979

1. Kicker plates

30

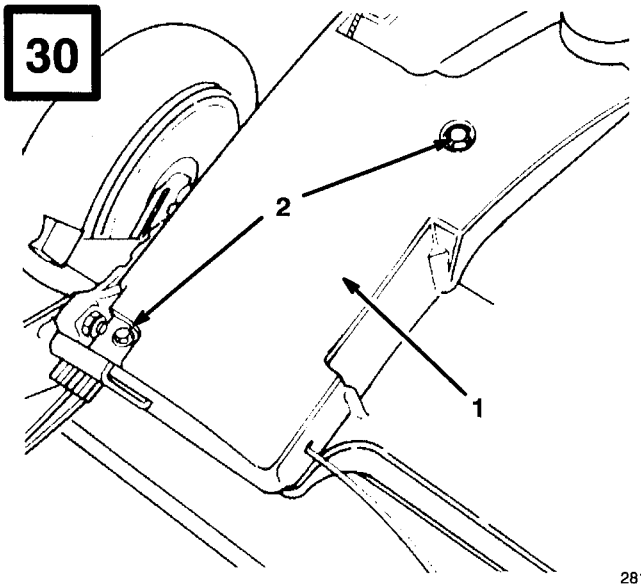

281

1. Belt cover
2. Screws

31

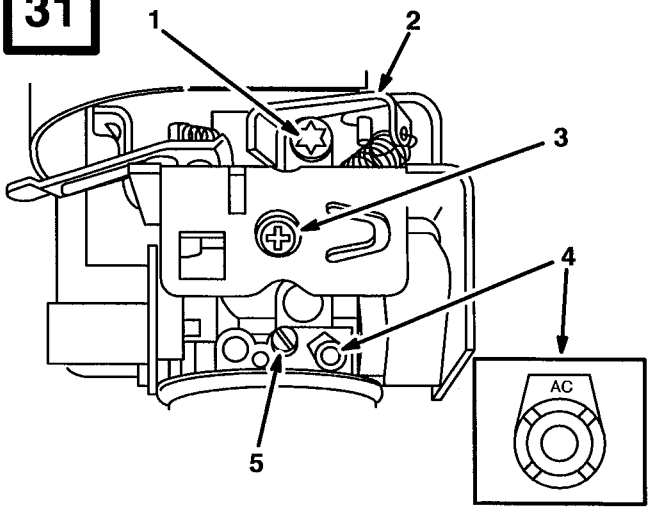

2025

1. Top no load screw
2. Throttle lever
3. Idle speed screw
4. Idle mixture valve with limiter
5. Non-adjustable screw

32

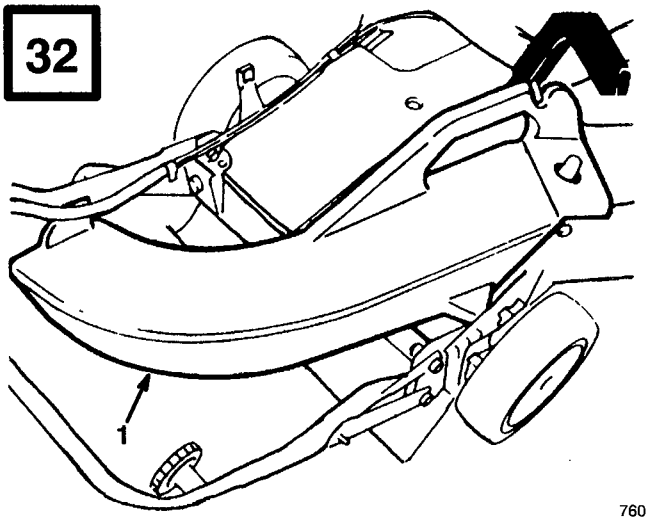

760

1. Side discharge chute

33

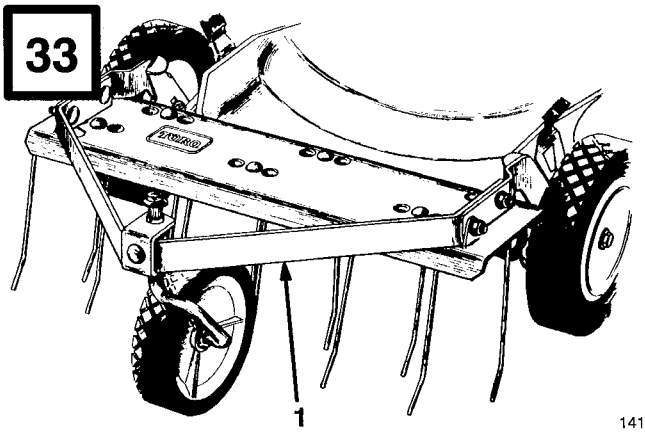

141

1. Dethatcher attachment

Contents

	Page
Introduction	1
Safety	2
Training	2
Preparation	2
Operation	2
Maintenance And Storage	3
Sound Pressure Level	4
Sound Power Level	4
Vibration Level	4
Symbol Glossary	4
Assembly	7
Install Handle	7
Install Starter Rope	7
Install Discharge Tunnel Plug	7
Install Battery	7
Before Starting	7
Fill Crankcase With Oil	7
Fill Fuel Tank With Gasoline	8
Recycling Tips	9
General Tips	9
Cutting Grass	9
Cutting Leaves	10
Operation	10
Operating Tips	10
Starting, Stopping And Self-propelling	10
Using Discharge Tunnel Plug	11
Using Grass Bag	11
Setting Height–of–cut	12
Maintenance	13
Servicing Air Cleaner	13
Replacing Spark Plug	14
Draining Gasoline	14
Changing Crankcase Oil	14
Adjusting Throttle	14
Cleaning Cooling System	15
Adjusting Wheel Drive	15
Adjusting The Brake Cable	15
Inspecting/Removing/Sharpening Blade	15
Lubrication	16
Charging Battery	16
Replacing Fuse	17
Cleaning	17
Carburetor Adjustments	18
Storage	18
Accessories	19
The Toro Starting Guarantee	20
Guaranteed To Start Maintenance Record	22

Introduction

Thank you for purchasing a Toro product.

All of us at Toro want you to be completely satisfied with your new product, so feel free to contact your local Authorized Service Dealer for help with service, genuine Toro parts, or other information you may require.

Whenever you contact your Authorized Service Dealer or the factory, always know the model and serial numbers of your product. These numbers will help the Service Dealer or Service Representative provide exact information about your specific product. You will find the model and serial number decal located in a unique place on the product (Fig. 1).

For your convenience, write the product model and serial numbers in the space below.

Model No: _____

Serial No. _____

Read this manual carefully to learn how to operate and maintain your product correctly. Reading this manual will help you and others avoid personal injury and damage to the product. Although Toro designs, produces and markets safe, state-of-the-art products, you are responsible for using the product properly and safely. You are also responsible for training persons who you allow to use the product about safe operation.

The Toro warning system in this manual identifies potential hazards and has special safety messages that help you and others avoid personal injury, even death. DANGER, WARNING and CAUTION are signal words used to identify the level of hazard. However, regardless of the hazard, be extremely careful.

DANGER signals an extreme hazard that will cause serious injury or death if the recommended precautions are not followed.

WARNING signals a hazard that may cause serious injury or death if the recommended precautions are not followed.

CAUTION signals a hazard that may cause minor or moderate injury if the recommended precautions are not followed.

Two other words are also used to highlight information. "Important" calls attention to special mechanical information and "Note" emphasizes general information worthy of special attention.

The left and right side of the machine is determined by standing behind the handle in the normal operator's position.

Safety

Training

1. Read the instructions carefully. Be familiar with the controls and the proper use of the equipment.
2. Never allow children or people unfamiliar with these instructions to use the lawnmower. Local regulations may restrict the age of the operator.
3. Never mow while people, especially children, or pets are nearby.
4. Keep in mind that the operator or user is responsible for accidents or hazards occurring to other people or their property.

Preparation

1. While mowing, always wear substantial footwear and long trousers. Do not operate the equipment when barefoot or wearing open sandals.
2. Thoroughly inspect the area where the equipment is to be used and remove all objects which may be thrown by the machine.
3. WARNING – Petrol is highly flammable.

- Store fuel in containers specifically designed for this purpose.
- Refuel outdoors only and do not smoke while refuelling.
- Add fuel before starting the engine. Never remove the cap of the fuel tank or add petrol while the engine is running or when the engine is hot.
- If petrol is spilled, do not attempt to start the engine but move the machine away from the area of spillage and avoid creating any source of ignition until petrol vapors have dissipated.
- Replace all fuel tanks and container caps securely.

4. Replace faulty silencers.
5. Before using, always visually inspect to see that the blades, blade bolts and cutter assembly are not worn or damaged. Replace worn or damaged blades and bolts in sets to preserve balance.
6. On multi-bladed machines, take care as rotating one blade can cause other blades to rotate.

Operation

1. Do not operate the engine in a confined space where dangerous carbon monoxide fumes can collect.
2. Mow only in daylight or in good artificial light.
3. Avoid operating the equipment in wet grass, where feasible.

4. Always be sure of your footing on slopes.

5. Walk, never run.

6. For wheeled rotary machines, mow across the face of slopes, never up and down.

7. Exercise extreme caution when changing direction on slopes.

8. Do not mow excessively steep slopes.

9. Use extreme caution when reversing or pulling the lawnmower towards you.

10. Stop the blade(s) if the lawnmower has to be tilted for transportation when crossing surfaces other than grass, and when transporting the lawnmower to and from the area to be mowed.

11. Never operate the lawnmower with defective guards or shields, or without safety devices, for example deflectors and/or grass catchers, in place.

12. Do not change the engine governor settings or overspeed the engine.

13. Disengage all blade and drive clutches before starting the engine.

14. Start the engine or switch on the motor carefully according to instructions and with feet well away from the blade(s).

15. Do not tilt the lawnmower when starting the engine or switching on the motor, except if the lawnmower has to be tilted for starting. In this case, do not tilt it more than absolutely necessary and lift only the part which is away from the operator.

16. Do not start the engine when standing in front of the discharge chute.

17. Do not put hands or feet near or under rotating parts. Keep clear of the discharge opening at all times.

18. Never pick up or carry a lawnmower while the engine is running.

19. Stop the engine and disconnect the spark plug wire.

- before clearing blockages or unclogging chute;
- before checking, cleaning or working on the lawnmower;
- after striking a foreign object. Inspect the lawnmower for damage and make repairs before restarting and operating the lawnmower;
- if lawnmower starts to vibrate abnormally (check immediately).

20. Stop the engine

- whenever you leave the lawnmower;
- before refuelling.

21. Reduce the throttle setting during engine shut down and, if the engine is provided with a shut-off valve, turn the fuel off at the conclusion of mowing.

22. Go slow when using a trailing seat.

Maintenance And Storage

1. Keep all nuts, bolts and screws tight to be sure the equipment is in safe working condition.

2. Never store the equipment with petrol in the tank inside a building where fumes may reach an open flame or spark.

3. Allow the engine to cool before storing in any enclosure.

4. To reduce the fire hazard, keep the engine, silencer, battery compartment and petrol storage area free of grass, leaves, or excessive grease.

5. Check the grass catcher frequently for wear or deterioration.

6. Replace worn or damaged parts for safety.

7. If the fuel tank has to be drained, this should be done outdoors.

Sound Pressure Level

Model 20767

This unit has an equivalent continuous A-weighted sound pressure at the operator ear of: 83.6 dB(A), based on measurements of identical machines per ANSI B71.5-1984 procedures.

Model 20768

This unit has an equivalent continuous A-weighted sound pressure at the operator ear of: 83 dB(A), based on measurements of identical machines per ANSI B71.5-1984 procedures.

Sound Power Level

This unit has a sound power level of: 100 dB(A)/1 pW, based on measurements of identical machines per Directive 84/538/EEC and amendments.

Vibration Level

This unit has a maximum hand-arm vibration level of 15.38 m/s2, based on measurement of identical machines per ISO 5349 procedures.

Symbol Glossary

Safety alert triangle — symbol within triangle indicates a hazard.



Safety alert symbol



Read operator's manual.



Consult technical manual for proper service procedures.



Stay a safe distance from the machine.

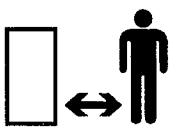

Stay a safe distance from the mower.

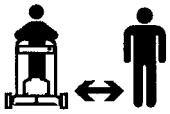

Do not open or remove safety shields while engine is running.

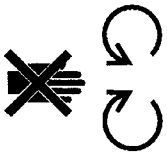

Rotating blade can cut off toes or fingers. Stay clear of mower blade as long as engine is running.

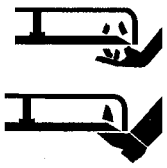

To avoid blade failure when mulching, use blade stiffener when mower is equipped with mulching plug.

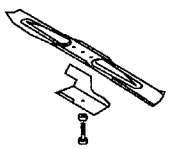

Transmission

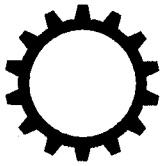

Oil



On/Run



Throw or flying objects — Whole body exposure



Thrown or flying objects — Rotary side-mounted mower. Keep deflector shield in place.

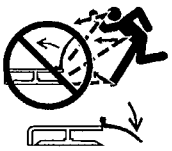

Stop engine before leaving operator position.



Hourmeter/elapsed operating hours

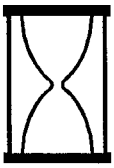

Fast



Slow



Decreasing/Increasing



Grease lubrication point



Engage

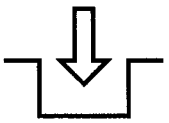

Disengage

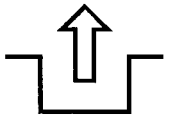

Battery charging condition

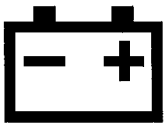

Fuel



Neutral

N

First gear

1

Second gear

2

Third gear

3

Engine start

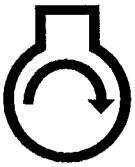

Cutting element — basic symbol



Engine stop



Choke

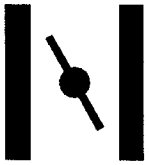

Primer (start aid)



Push primer three times.

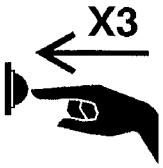

Properly dispose of batteries.



Insert key in ignition switch.

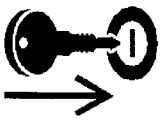

Turn key in ignition switch.



Move control.



Move control forward.

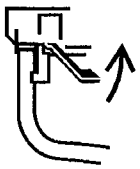

Cutting element — height adjustment



Pull rope.

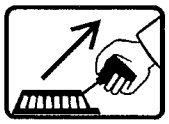

Wheel



Wheel traction



Lower control bar.



Raise control bar.



Raise/lower control bar.

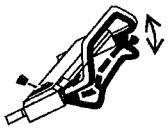

Raise/lower control bar.

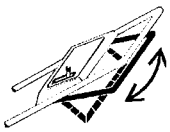

Raise control bar.



Move control rearward.

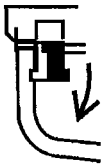

Raise control bar.



Lower control bar.



Assembly

Install Handle

1. Align handles and tighten handle knobs (Fig. 2). Bend handle latches slightly toward each other (Fig. 2).

2. Pivot handle backward until handle stud snaps into center hole of handle latch (Fig. 2). If handle height is not satisfactory, adjust by placing handle stud into a different hole. Secure control cables in position with cable ties.

Install Starter Rope

1. Pull the starter rope through the rope guide on the handle (Fig. 3). To make the rope easier to loop, squeeze the control bar on the handle to release the blade brake.

Install Discharge Tunnel Plug

1. Make sure engine is off.

2. Open the discharge door by moving it rearwards (Fig. 4). Hold the discharge door handle to prevent the spring-loaded door from closing while inserting the plug.

3. Since the plug is slightly wider than the discharge tunnel opening, rotate the plug clockwise slightly while inserting it (Fig. 4). Make sure the arrow on the plug decal is pointing upwards.

4. Push the plug all the way in until the spring clip on the bottom of the plug clicks into place, locking the plug securely into the discharge tunnel (Fig. 5). Release discharge door handle to lock top of plug.

Install Battery

(electric start model)

1. Refer to Charging Battery, page 16. Slide battery, decal side up, between mounting tabs on back of control panel and connect wires (Fig. 6). Insert key into switch when ready to start engine.

Before Starting

Fill Crankcase With Oil

Fill crankcase with SAE 30 or 10W30 oil until oil level reaches FULL mark on dipstick as shown in (Fig. 7). The maximum crankcase capacity is 0.75 liters (25 ounces) of oil. Use any high quality detergent oil having the American Petroleum Institute (API) "service classification" — SF, SG or SH.

Before each use, ensure oil level is between ADD and FULL marks on dipstick (Fig. 7). Add oil if level is low.

1. Position mower on level surface and clean around oil dipstick.

2. Remove dipstick by rotating cap counterclockwise 1/4 turn.

3. Wipe dipstick and insert it into filler neck. Rotate cap clockwise 1/4 turn. Then remove dipstick and check level of oil (Fig. 7). If level is low, add only enough oil to raise level to FULL mark on dipstick. **DO NOT FILL ABOVE FULL MARK BECAUSE ENGINE COULD BE DAMAGED WHEN STARTED. POUR OIL SLOWLY.**

4. Insert dipstick into filler neck and rotate cap clockwise 1/4 turn to lock.

   Note: Check oil level each time mower is used or after every 5 operating hours. Initially, change oil after the first 2 hours of operation; thereafter, change oil after every 25 hours of operation. More frequent oil changes are required in dusty or dirty conditions.

Fill Fuel Tank With Gasoline

⚠ DANGER

POTENTIAL HAZARD

- **In certain conditions gasoline is extremely flammable and highly explosive.**

WHAT CAN HAPPEN

- **A fire or explosion from gasoline can burn you, others, and cause property damage.**

HOW TO AVOID THE HAZARD

- **Use a funnel and fill the fuel tank outdoors, in an open area, when the engine is cold. Wipe up any gasoline that spills.**
- **Do not fill the fuel tank completely full. Add gasoline to the fuel tank until the level is 1/4" to 1/2" (6 mm to 13 mm) below the bottom of the filler neck. This empty space in the tank allows gasoline to expand.**
- **Never smoke when handling gasoline, and stay away from an open flame or where gasoline fumes may be ignited by a spark.**
- **Store gasoline in an approved container and keep it out of the reach of children.**
- **Never buy more than a 30-day supply of gasoline.**

This engine is certified to operate on unleaded gasoline. The Toro Company strongly recommends the use of fresh, clean, UNLEADED regular grade gasoline with an octane rating of 85 or higher in Toro gasoline powered products. Unleaded gasoline burns cleaner, extends engine life, and promotes good starting by reducing the build-up of combustion chamber deposits. In countries other than U.S.A., leaded gasoline may be used if it is commercially available and unleaded is unavailable.

IMPORTANT: Do not mix oil with the gasoline. Do not use gasoline that has been stored in an approved container from one season to the next.

Toro recommends that a fuel stabilizer be used regularly in all Toro gasoline powered products during operation and storage seasons. Stabilizers

clean the engine during operation and prevent gum-like varnish deposits from forming in the engine during periods of storage.

IMPORTANT: Some fuels, called oxygenated or reformulated gasolines, are gasolines blended with alcohols or ethers. Excessive amounts of these blends can damage the fuel system or cause performance problems. Never use methanol, gasoline containing methanol, gasohol containing more than 10% ethanol or white gas because engine fuel system damage could result. If any undesirable operating symptoms occur, use gasoline with a lower percentage of alcohol or ether.

Do not use fuel additives other than those manufactured for fuel stabilization during storage such as Toro's Stabilizer/conditioner or a similar product. Toro's Stabilizer/conditioner is a petroleum distillate based conditioner/stabilizer. Toro does not recommend stabilizers with an alcohol base such as ethanol, methanol or isopropyl. Additives should not be used to try to enhance the power or performance of the machine.

1. Clean around fuel tank cap and remove cap from tank (Fig. 8). Using unleaded gasoline, fill fuel tank to within 6 to 13 mm (1/4 to 1/2 inch) from top of tank, not into filler neck. Do not fill tank full.

2. Open vent screw on top of fuel tank cap (Fig. 8) by rotating screw counterclockwise.

   Note: Vent screw should only be closed when tipping mower for blade and housing maintenance or when draining oil.

3. Reinstall fuel tank cap and wipe up any spilled gasoline.

4. Open fuel shut-off valve on engine (Fig. 9).

Recycling Tips

General Tips

Follow these instructions whether cutting grass or leaves for the best cutting results and lawn appearance:

- Maintain a **sharp blade** throughout the cutting season. Periodically file down nicks on blade.
- **Only mow dry grass or leaves.** Wet grass and leaves tend to clump on yard and may cause mower to plug or engine to stall. They also may be slippery to walk on and could cause you to slip and fall.

⚠ WARNING

POTENTIAL HAZARD
- **Wet grass or leaves can cause you to slip and contact blade.**

WHAT CAN HAPPEN
- **Blade contact can seriously injure you.**

HOW TO AVOID THE HAZARD
- **Mow only in dry condition.**

- Set engine speed to fastest position. Maximum horsepower provides best cutting results.
- Clean clippings or leaves from underside of mower deck after each mowing.
- Keep engine in good running condition. Cutting and recutting requires more horsepower.
- Clean air filter more frequently. Cutting and recutting stirs up more clippings and dust which clogs the air filter and reduces engine performance.

Cutting Grass

- Grass grows at different rates at different times of the year. In the heat of the summer, it is generally best to cut grass at the C, D or E

height-of-cut settings. Only about 1/3 of the grass blade should be cut off. Cutting below the C setting is not recommended unless grass is sparse or it is late fall when grass growth begins to slow down.

- When cutting grass over six inches tall, you may want to first mow using the highest height-of-cut setting and a slower walking speed; then mow again at a lower setting for best lawn appearance. If grass is too long and leaves clumps on top of lawn, mower may plug and cause engine to stall.
- Alternate mowing direction. This helps disperse clippings over lawn for even fertilization.

If the finished cut lawn appearance is unsatisfactory, try one or more of the following:

- Sharpen the blade.
- Walk at a slower pace while mowing.
- Raise the height-of-cut setting on your mower.
- Cut grass more frequently.
- Overlap cutting swaths instead of cutting a full swath with each pass.
- Mow across the marginal areas a second time.
- Set height-of-cut on front wheels one notch lower than rear wheels. (example: set front wheels at "C" setting and rear wheels at "D" setting)

Cutting Leaves

- When cutting is complete, always be sure that 50% of the lawn shows through the cut leaf cover. This may require one or more passes over the leaves.
- For light leaf coverage, position all wheels at the same height-of-cut setting.
- If there are more than five inches of leaves on lawn, set the front wheels one or two notches higher than the rear wheels. This makes it easier to feed leaves under mower deck.
- Walk at a slower mowing speed if leaves are not being cut up finely enough to be hidden down in the grass.
- If you cut up a lot of oak leaves, you might want to add lime to your grass in the spring. Lime reduces the acidity of oak leaves.

Operation

Operating Tips

1. CHECK OIL LEVEL—Maintain oil level between ADD and FULL marks as shown on dipstick (Fig. 7).
2. BEFORE EACH MOWING—Ensure self–propelled drive and control bar functions properly. When control bar is released, engine and self-propelled drive are designed to stop.

Starting, Stopping And Self-propelling

1. CONTROLS—Key switch (electric start model), throttle, ground speed control, control bar and recoil starter are on upper handle (Fig. 10).

   Note: The engine requires a warm-up period of one minute to several minutes, depending on the temperature.

2. Push spark plug wire onto spark plug.
3. Open fuel shut-off valve (Fig. 9) if it is not already open.
4. Move ground speed control to (N) and throttle to ⊠ (CHOKE).
5. KEY–LECTRIC STARTING—Turn key to ⊙ (START) and release when engine begins running. When engine starts, remove throttle from ⊠ (CHOKE) and regulate engine speed as desired. If the battery's charge is too weak to start the engine, the engine can be started with the recoil starter (Fig. 10). Allow the engine to warm-up. During warm-up, the equipment can be operated.

6. MANUAL STARTING—Squeeze control bar against handle. Pull recoil starter out until positive engagement results; then pull vigorously to start the engine. When engine starts, remove throttle from ⊠ (CHOKE) and regulate engine speed as desired.

7. GROUND SPEED (Fig. 10)—The mower has three ground speeds: number "1" is slow, "2" is medium, and "3" is a fast walking pace. Move ground speed control to desired setting. **Ground speed can be varied by increasing or decreasing distance between control bar and handle.** Lower control bar to slow mower when making a turn, maneuvering, or if mower is moving too fast for you. If you lower control bar too far, the mower will stop self-propelling. Squeeze control bar closer to handle to increase ground speed. When control bar is tight against handle, mower will self-propel at maximum ground speed. The control bar does not have to be squeezed tight against the handle to self-propel. Move ground speed control to Ⓝ when using the mower for trimming and whenever leaving mower.

8. WHEEL TRACTION OPERATION (Fig. 11)—Move control bar to the RUN/SHIFT position. Move ground speed control to desired setting and raise control bar to the DRIVE position to self-propel.

   IMPORTANT: Do not shift speeds while control bar is in the DRIVE position; the transmission could become damaged and cause shifting problems. To change ground speed, move control bar to the RUN/SHIFT position (Fig. 11) or lower bar far enough to stop the unit from self-propelling.

   Note: The drive wheels are equipped with freewheeling clutches which enable the mower to be pulled rearward easier when the wheel drive is disengaged. To disengage the clutches, mower must be pushed forward at least 2,5 cm (1") after wheel drive operation has stopped. Consult with your dealer if you have any questions.

9. STOPPING—To stop engine, release the control bar. Remove key from switch on electric start model. Pull wire off spark plug if mower will be unattended or not used.

Using Discharge Tunnel Plug

1. Make sure engine is off. Open the discharge door by pulling forward on the handle and moving it rearwards (Fig. 4). Hold the discharge door handle to prevent the spring-loaded door from closing while inserting the plug.

2. Since the plug is slightly wider than the discharge tunnel opening, you must rotate the plug clockwise slightly while inserting it (Fig. 4). Make sure the arrow on the plug decal is pointing upwards.

3. Push the plug all the way in until the spring clip on the bottom of the plug clicks into place, locking the plug securely into the discharge tunnel (Fig. 5). Release the discharge door handle to lock the top of the plug.

4. To remove the plug, move the discharge door handle rearwards while at the same time lift up the spring clip on the bottom of the plug. When the plug is unlocked, pull it out of the discharge tunnel.

Using Grass Bag

Occasionally you may wish to use the grass bag for bagging extra long grass, lush grass or leaves.

1. Stop engine and wait for all moving parts to stop. Remove key from switch on electric start model.

2. Ensure discharge door handle is fully forward and pin is contacting catch (Fig. 12).

3. INSTALLING BAG—Slide hole in bag frame onto retaining post on housing (Fig. 12) and set rear of bag frame onto lower handle.

4. Pull discharge door handle forward and move handle rearward until pin locks in bag notch (Fig. 13). Discharge door in mower housing is now open.

5. EMPTYING BAG—Stop engine and wait for all parts to stop. Raise discharge door handle and move it forward until the locking pin contacts the catch (Fig. 12). Grasp handle at front and rear of bag and lift bag off mower. Gradually tip bag forward to empty clippings.

⚠ DANGER

POTENTIAL HAZARD
- **Grass clippings and other objects can be thrown from an open discharge tunnel.**

WHAT CAN HAPPEN
- **Objects thrown with enough force could cause serious personal injury or death to operator or bystander.**

HOW TO AVOID THE HAZARD
- **Never open door on discharge tunnel when engine is running unless the grass bag, optional side discharge attachment or discharge tunnel plug is securely installed.**

⚠ DANGER

POTENTIAL HAZARD
- **A worn grass bag could allow small stones and other similar debris to be thrown in operator's or bystanders direction.**

WHAT CAN HAPPEN
- **Thrown objects can cause serious personal injury or death to operator or bystanders.**

HOW TO AVOID THE HAZARD
- **Check the grass bag frequently. If it is damaged, install a new genuine TORO replacement bag that has this or a similar warning.**

6. To reinstall bag, repeat steps 3-4.

⚠ DANGER

POTENTIAL HAZARD
- **Thrown objects may result if discharge door does not close completely.**

WHAT CAN HAPPEN
- **Thrown objects can cause serious personal injury or death.**

HOW TO AVOID THE HAZARD
- **If discharge door cannot be closed because grass clippings clog discharge area, stop engine and gently move discharge door handle back and forth until door can be closed completely. Do not force discharge door closed because door or handle may be damaged. If door still cannot be closed, remove obstruction with a stick, not your hand.**

Setting Height–of–cut

Toro's exclusive SmartWheel™ provides a simple method for determining the proper cutting height.

The SmartWheel has two cutting scales — SPARSE/NORMAL and LUSH — to ensure the best height–of–cut setting in any mowing condition (Fig. 14). Use the SPARSE/NORMAL scale during the warm summer season for the majority of your mowing. The LUSH scale is for thick, moist, succulent grass that grows most often in the spring.

In general, it is recommended that:

- Grass length should usually be cut at the C, D or E settings or maintained at two to three inches in height.
- Cutting below the C setting is not recommended unless grass is sparse or it is late fall when grass growth begins to slow down. When cutting long grass, you may need to use a higher height–of–cut setting and a slower walking speed; then recut the grass at a more normal setting. If grass is too long and leaves clumps on top of lawn, mower may plug and cause engine to stall.

- The SmartWheel calculates the proper setting to ensure that no more than 1/3 of the grass blade is cut off.

⚠ DANGER

POTENTIAL HAZARD
- **Adjusting height-of-cut levers could bring hands into contact with moving blade.**

WHAT CAN HAPPEN
- **Contact with moving blade could cause serious personal injury.**

HOW TO AVOID THE HAZARD
- **Do not adjust height-of-cut settings when engine is running and blade is rotating.**
- **Do not put fingers under housing to lift mower when adjusting height-of-cut levers.**

1. Before starting the engine and beginning to mow, push the mower into the grass. Stop when the letters on the SmartWheel™ design on the rear left wheel are upright (Fig. 14).

2. Using the color coded SmartWheel design (Fig. 14), compare the tips of the grass blades to the colors/letters on the wheel. Whichever color/letter the tips of the grass blades correspond with is the proper cutting height.

3. Squeeze mower's height-of-cut lever toward wheel and move it to the corresponding color/letter on mower housing (Fig. 15). For easier adjustment, lift housing up so wheel is off ground. **Do not put fingers under housing when lifting.** Ensure pin on height-of-cut lever engages slot in housing. Adjust all wheels to the same color/letter setting.

   Note: Front wheels can be adjusted to 1,3 cm (1/2 inch). Move height-of-cut lever past "A" and release pin into slot in housing.

Maintenance

⚠ WARNING

POTENTIAL HAZARD
- **When wire is on spark plug, someone could accidentally start the engine.**

WHAT CAN HAPPEN
- **Accidental starting of engine could cause serious injury to operator or bystanders.**

HOW TO AVOID THE HAZARD
- **Pull wire off spark plug before performing any maintenance or adjustments.**

Servicing Air Cleaner

Normally, clean air cleaner after every 25 operating hours. More frequent cleaning is required when mower is operated in dusty or dirty conditions. Replace air cleaner parts, if very dirty.

1. Stop engine and pull wire off spark plug. Remove key from switch on electric start model.

2. Rotate knob securing air cleaner cover to engine until cover can be removed. Clean cover thoroughly (Fig. 16).

3. If the foam element is dirty, remove it from air cleaner body (Fig. 16). Clean thoroughly.

   A. WASH foam element in a solution of liquid soap and warm water. Squeeze to remove dirt, but do not twist because foam may tear. Rinse thoroughly in clear water.

   B. DRY by wrapping in a clean rag. Squeeze rag and foam element to dry.

   C. SATURATE element with SAE 30 engine oil. Squeeze element to remove excess oil and to distribute oil thoroughly. A damp element is desirable.

4. Reinstall foam element and air cleaner cover.

   IMPORTANT: Do not operate engine without air cleaner element because extreme engine wear and damage will likely result.

Replacing Spark Plug

Remove plug after every 25 operating hours and check its condition. Replace spark plug every 100 operating hours or every season. Use a Champion RC12YC spark plug or equivalent.

1. Stop engine and pull wire off spark plug.
2. Clean around spark plug and remove plug from cylinder head.

   IMPORTANT: Replace a cracked, fouled, or dirty spark plug. Do not sand blast, scrape, or clean electrodes because engine damage could result from grit entering cylinder.

3. Set air gap at 0.76 mm (0.030") (Fig. 17). Install correctly gapped spark plug and gasket seal. Tighten plug firmly to 19 N·m (14 ft-lb).

Draining Gasoline

1. Stop engine and wait for engine to cool. Pull wire off spark plug. Remove key from switch on electric start model.

   Note: Drain gasoline from a cold engine only.

2. Turn fuel shut-off valve (Fig. 9) to OFF position.
3. Remove cap from fuel tank (Fig. 8) and use a pump-type syphon to drain fuel into clean gas can.

   Note: This is the only procedure recommended for draining fuel.

4. Open fuel shut-off valve before using mower again.

Changing Crankcase Oil

Change oil after the first 5 operating hours and then after every 50 hours or every season. Change oil while engine is warm.

Note: Change oil every 25 hours when operating under heavy load or in high temperatures.

1. Turn fuel shut-off valve (Fig. 9) to OFF position.
2. Turn vent screw on fuel tank cap (Fig. 8) clockwise to close.
3. Run engine until it dies. Try starting engine once more to make sure gas is out of carburetor.
4. Pull wire off spark plug. Remove key from switch on electric start model.
5. If grass bag is installed on mower, close door in mower housing and remove bag.
6. Remove dipstick from oil fill tube and place a drain pan next to left side of mower.
7. Tip mower on its left side, allowing oil to drain into drain pan (Fig. 18).
8. When oil is drained, return mower to upright position and add fresh oil to engine. Refer to Fill Crankcase With Oil, page 7.
9. Open vent screw on fuel tank cap, open fuel shut-off valve and reconnect spark plug wire.

Adjusting Throttle

Throttle control adjustment may be required if engine does not start or stop. Whenever a new throttle control cable is installed, throttle must be adjusted.

1. Stop engine and pull wire off spark plug. Remove key from switch on electric start model.
2. Move throttle control to (FAST position).
3. Loosen cable clamp screw until throttle cable slides (Fig. 19).
4. Move throttle cable left or right until holes in throttle lever and throttle bracket align (Fig. 19).
5. Pull throttle cable slightly to remove any slack and tighten cable clamp screw to lock adjustment in place.

Cleaning Cooling System

After every 100 operating hours or every season, clean dirt and chaff from cylinder, cylinder head fins and from around carburetor and linkage. Also remove debris from air intake slots on recoil housing. This will ensure proper cooling and best engine performance.

Adjusting Wheel Drive

If mower does not self-propel or self-propels when control bar is more than 4 cm (1 1/2 inches) from the handle, adjust wheel drive control knob on rear of gear box.

1. Stop engine and pull wire off spark plug. Remove key from switch on electric start model.
2. If grass bag is installed on mower, close door in mower housing and remove bag.
3. ADJUSTMENT (Fig. 20)—Rotate control knob clockwise 1/2 turn if mower does not self-propel. If mower creeps forward when drive is not engaged, rotate knob 1/2 turn counterclockwise to loosen belt.

⚠ CAUTION

POTENTIAL HAZARD

- **Over-adjusting cable may cause mower to move without engaging traction drive.**

WHAT CAN HAPPEN

- **Contact with a moving mower could cause serious personal injury to operator or bystanders.**

HOW TO AVOID THE HAZARD

- **Do not over-adjust wheel drive cable.**

4. CHECK ADJUSTMENT—Adjustment is correct when control bar is about 4 cm (1 1/2 inches) from handle (Fig. 21) and wheels start to turn freely.
5. Repeat steps 2 and 3 until properly adjusted.

Adjusting The Brake Cable (Fig. 22)

Whenever a new blade brake cable assembly is installed, an adjustment is required.

1. Stop engine. Pull wire off spark plug. Remove key from switch on electric start model.
2. CHECK ADJUSTMENT—Move control bar toward handle until slack in wire is removed. The gap between brake lever and handle must be 3,2 mm–6,4 mm (1/8"–1/4"). See step 3 for adjustment.
3. CHECK CABLE CONDUIT—Loosen nut on cable bracket. Insert 3,2 mm–6,4 mm (1/8"–1/4") object between brake lever and handle. Pull down on cable conduit until all slack is removed from wire. Then tighten nut.

Inspecting/Removing/ Sharpening Blade

Always mow with a sharp blade. A sharp blade cuts cleanly and without tearing or shredding the grass blades like a dull blade.

1. Turn fuel shut-off valve (Fig. 9) to OFF position.
2. Turn vent screw on fuel tank cap (Fig. 8) clockwise to close.
3. Run engine until it dies. Try starting engine once more to make sure gas is out of carburetor.
4. Pull wire off spark plug. Remove key from switch on electric start model.
5. If grass bag is installed on mower, close door in mower housing and remove bag.
6. Tip mower on its left side (Fig. 23). Avoid rotating blade because starting problems may result.

7. INSPECTING BLADE—Carefully examine blade for sharpness and wear, especially where flat and curved parts meet (Fig. 24A). Since sand and abrasive material can wear away the metal that connects the flat and curved parts of the blade, check blade before using the mower. If a slot or wear is noticed (Fig. 24B & C), replace blade. Refer to step 8.

   Note: For best performance, install new blade before cutting season begins. During the year, file down small nicks to maintain the cutting edge.

8. REMOVING BLADE—Grasp end of blade using a rag or thickly padded glove. Remove blade bolt, lock washer, accelerator and blade (Fig. 23).

⚠ DANGER

POTENTIAL HAZARD
- **A worn or damaged blade could break and a piece of blade could be thrown into operator's or bystander's area.**

WHAT CAN HAPPEN
- **A thrown piece of blade could cause serious personal injury or death to operator or bystanders.**

HOW TO AVOID THE HAZARD
- **Inspect blade periodically for wear or damage.**
- **Replace a worn or damaged blade.**

9. SHARPENING BLADE—Using a file, sharpen top side of blade and maintain original cutting angle (Fig. 25). The blade will remain balanced if same amount of material is removed from both cutting edges.

   IMPORTANT: Check balance of blade by putting it on a blade balancer. An inexpensive balancer can be purchased at a hardware store. A balanced blade stays in a horizontal position and an unbalanced blade settles to the heavy side. If blade is not balanced, file more metal off cutting edge on heavy end of blade.

10. Install sharp, balanced TORO blade, accelerator, lock washer and blade bolt. Sail part of blade must point toward top of mower housing to ensure correct installation. Tighten the blade bolt to 68 N·m (50 ft-lb).

11. Return mower to upright position.

12. Open vent screw on fuel tank cap, open fuel shut-off valve and reconnect spark plug wire.

Lubrication

After every 25 operating hours or when season ends, front and rear wheels must be lubricated.

1. Apply 2 or 3 drops of light oil on inside of front and outside of all wheel bolts. Spin wheels to distribute oil into bushings. Wipe up excess oil.

2. Move rear wheel height–of–cut levers to "C" setting. Wipe grease fittings with clean rag (Fig. 26). Install grease gun onto fitting and gently apply 2 or 3 pumps of #2 Multi–Purpose Lithium Base Grease. Excess pressure may damage seals.

Charging Battery

(electric start model)

Although a new battery is not fully charged, a partial charge of 4 hours provides enough energy for several starts. However, a new battery must be charged for 72 continuous hours to ensure full charge. Also charge battery for 72 hours when mower is stored and in the spring. During normal operation, engine alternator keeps battery charged. If battery should run down, charge it for 48 hours.

1. Stop engine and disconnect wire harness from battery terminal (Fig. 6).

2. If desired, battery can be removed by sliding it out of mounting tabs. However, removal is not required if mower can be positioned near an electrical outlet.

3. Connect TORO electro charger to battery and plug into 220VAC power outlet. After charging battery for specified time, unplug charger and disconnect from battery.

4. Connect wiring harness to battery terminal.

   IMPORTANT: Only the TORO electro charger is recommended because other chargers could damage the battery. Always use charger indoors and charge battery at room temperature (22° C or +70° F) whenever possible. Do not charge battery longer than 72 hours because damage could result.

Replacing Fuse

(electric start model)

The electrical system charging circuit is protected by a fuse. If the battery does not stay charged, the fuse may be blown. Use a 5 amp AGC-5 fuse.

1. Push the two fuse holder sections together. Rotate fuse holder cap to open fuse holder (Fig. 27).

2. Remove fuse and discard.

3. Install new fuse.

4. Line up tabs on fuse holder cap with fuse holder bottom and push sections together. Rotate cap to close fuse holder.

Cleaning

Plug and Discharge Tunnel

To ensure best performance, the discharge tunnel plug must be cleaned after each use. When grass is thick and lush, clippings may collect on and around the plug; this may make plug removal difficult. After each use, remove plug from discharge tunnel and clean off all debris.

Always be sure that discharge tunnel door locks closed when handle is released. If debris prevents discharge door from locking closed, clean inside of discharge tunnel and door thoroughly.

Underside of Mower Housing

Keep underside of mower housing clean. Be especially careful to keep kickers free of debris (Fig. 29).

Washing Method

1. Position mower on a flat surface near a garden hose.

2. Start the engine.

3. Engage the blade.

4. Hold the running garden hose at handle level and direct water to flow on ground just in front of right rear tire (Fig. 28). The rotating blade will draw water under the housing and wash out clippings. Let the water run for a few minutes or until you no longer see clippings being washed out from under housing.

5. Stop the engine.

6. Turn off the garden hose.

7. Restart mower and let it run for a few minutes to dry out moisture on the mower and its components.

Scraping Method

If washing does not remove all debris from under deck, tip mower and scrape it clean.

1. Turn fuel shut-off valve (Fig. 9) to OFF position.

2. Turn vent screw on fuel tank cap (Fig. 8) clockwise to close.

3. Run engine until it dies. Try starting engine once more to make sure gas is out of carburetor.

4. Pull wire off spark plug. Remove key from switch on electric start model.

5. If grass bag is installed on mower, close door in mower housing and remove grass bag.

6. Tip mower on its left side (Fig. 29). Avoid rotating blade because starting problems may result.

7. Remove dirt and grass clippings with a hardwood scraper. Avoid burrs and sharp edges.

8. Turn mower upright.

9. Refill gas tank.

10. Open vent screw on fuel tank cap, open fuel shut-off valve and reconnect spark plug wire.

Belt Cover

Keep area under belt cover free of debris.

1. With engine turned off, remove screws securing belt cover to mower housing (Fig. 30). Lift off cover and brush out all debris from belt area. Reinstall belt cover.

Carburetor Adjustments

The carburetor on this engine is low emission. It is equipped with an idle mixture valve with a limiter (Fig. 31), which allows some adjustment, and an idle speed adjustment screw.

Adjustments

DO NOT ADJUST TOP SPEED SCREW. It is pre-set at factory.

1. Start engine and warm up approximately 5 minutes before adjusting.

2. With engine running, place throttle control in SLOW position.

3. Rotate carburetor throttle lever against the idle speed screw and hold it.

4. Turn idle speed screw to obtain 1750 rpm.

5. Rotate idle mixture valve full travel clockwise and then counterclockwise.

6. Finally, position idle mixture valve in middle of travel.

7. Check idle speed and re-adjust to 1750 rpm, if necessary.

8. Move throttle control to FAST position. Engine should accelerate smoothly. If it does not, adjust idle mixture valve counterclockwise 1/8 turn.

Storage

1. For long term storage, either drain gasoline from fuel tank or add a fuel additive to the gasoline. To drain gasoline, refer to Draining Gasoline, page 14. After fuel is drained, start engine and let it idle until all fuel is consumed and engine stops. Repeat the starting procedure two more times to ensure all gas is removed from the engine. If gasoline is not drained and a fuel stabilizer is not added, gum–like varnish deposits will form and cause poor engine operation, even starting problems.

   Note: If engine is operating on oxygenated or reformulated gasoline (gasoline blended with an alcohol or an ether), remove all fuel from tank and run engine until it stops from lack of fuel before storing.

   Fuel can be left in gas tank only if a fuel stabilizer is added to gasoline before storing. Toro does not recommend stabilizers with an alcohol base, such as ethanol, methanol or isopropyl. Use fuel stabilizer in recommended quantities as specified on container.

   Under normal conditions, fuel additives remain effective in fuel for 6–8 months.

2. Drain oil: refer to Changing Crankcase Oil, page 14. After oil is drained, do not fill crankcase with oil until the following steps (3-10) are completed.

3. Remove spark plug and pour 2 tablespoons of SAE 30 oil into hole in cylinder. Pull starter rope slowly to coat inside of cylinder. Install spark plug and tighten to 19 N·m (14 ft-lb). **DO NOT INSTALL WIRE ON SPARK PLUG.**

4. Clean mower housing: refer to Cleaning Mower Housing, Discharge Tunnel, Belt Cover and Plug, page 17.

5. Check condition of blade: refer to Inspecting/Removing/Sharpening Blade, page 15.

6. Tighten all nuts, bolts, and screws.

7. Clean dirt and chaff from cylinder, cylinder head fins, and blower housing. Also remove grass clippings, dirt, and grime from external parts of the engine, shrouding, and top of mower housing.

8. Clean air cleaner: refer to Servicing Air Cleaner, page 13.

9. Lubricate the wheels: refer to Lubrication, page 16.

10. Touch up all rusted or chipped paint surfaces. Toro Re–Kote paint is available from an Authorized TORO Service Dealer.

11. Fill crankcase with oil; refer to Fill Crankcase With Oil, page 7.

12. Charge battery for 72 hours (electric start model); refer to Charging Battery, page 16.

13. Store mower in a clean, dry place. Cover mower to keep it clean and protected.

Accessories

For special conditions the following accessories may be purchased at your local authorized TORO Service Dealer.

1. **Side Discharge Kit, Model No. 59113**—Installs in seconds. Rear mounted in place of the grass bag. Disperses clippings while trimming on both sides (Fig. 32).

2. **Spark Arrestor, Part No. 77-9040**—If a spark arrestor is required because of local, state, or federal regulations, it may be purchased from an Authorized Toro Service Dealer. If mower is operated on any California, U.S.A., forest, brush, or grass covered land without a properly operating spark arrestor, the operator is violating state law, Section 4442 Public Resources Code.

3. **Dethatcher Kit, Model No. 59131**—Installs in minutes. Front mounted for easy maneuverability (Fig. 33). Spring tines loosen thatch for clean vacuuming into grass bag and convenient disposal.

The Toro Starting Guarantee

A Five Year Limited Warranty
On The Toro GTS 150 OHV Engine

What Is Covered?

The Toro Company guarantees that your TORO GTS 150 Engine will start on the first or second pull for five years from the date of purchase—if you provide the routine maintenance it requires—or we will fix it. The cost of parts and labor are included, but you must pay transportation costs. This covers TORO GTS 150 engines purchased after September 1, 1991.

What Must You Do To Keep The Warranty In Effect?

You must maintain your TORO GTS 150 Engine by following the maintenance schedule detailed in the Operator's Manual, at your expense. You must record this work in the maintenance chart provided and keep your proof of purchase. You will also need to have your TORO GTS 150 engine serviced annually by an Authorized TORO Service Dealer.

How Do You Get Service?

If the starting performance of your TORO GTS 150 Engine should diminish to the point where it will not start in one or two pulls by a normal, able–bodied adult, you should follow the procedures below:

1. Contact any Authorized TORO Service Dealer or the TORO Distributor.
2. He will either instruct you to return the product to him or recommend another Authorized TORO Service outlet which might be more convenient.
3. Take the product, your maintenance records, and proof of purchase to the Service Dealer.

If, for any reason, you are dissatisfied with the Dealer's analysis of your engine's starting condition, or the assistance provided, please contact your TORO Distributor.

What Does This Warranty Not Cover?

This Warranty does not cover:

1. Any repairs on products used commercially.
2. Normal maintenance including replacement of spark plugs, air filter, fuel filter, and carburetor adjustments.
3. Oil change and lubrication.
4. Repairs or adjustments due to:

A. Failure to follow proper maintenance procedures;

B. Rotary mower blade striking an object;

C. Contaminants in the fuel system;

D. Improper fuel or fuel mixture (consult your Operator's Manual if in doubt);

E. Failure to follow the proper storage procedures as specified in the Operator's Manual;

F. Operation misuse, neglect or accidents;

G. Repairs or attempted repairs by anyone other than an Authorized TORO Service Dealer.

5. Special operational conditions where starting may require more than [illegible] pulls, including:

A. First time starts after extended period of non–use or seasonal storage;

B. Cool temperature starts such as those found in early spring and late autumn may require an additional pull or two (applies to rotary products only);

C. Improper starting procedures. If you are having difficulty starting your unit, please check the Operator's Manual to ensure you are using the correct starting procedures. This can save an unnecessary visit to a Service Dealer.

All warranty repairs reimbursable under this warranty must be performed by an Authorized TORO Service Dealer using Toro approved replacement parts.

The above remedy through repair by an Authorized TORO Service Dealer is the purchaser's sole remedy.

Guaranteed To Start Maintenance Record

To keep the starting guarantee in effect, you must perform the following maintenance after every 25 operating hours, more often in dusty and dirty conditions. Follow the procedures in this Operator's Manual and record information on this chart.

Date	Hours Used	Service Air Cleaner	Change Oil Doesn't apply to 2–Cycle	Lubricate Wheels	Check Spark Plug	Mower Storage


TORO®