Form No. 3405-785 Rev A

TORO®

Count on it.

Parts Catalog

Groundsmaster® 3280-D

4-Wheel Drive Traction Unit

Model No. 30345—Serial No. 316000001 and Up

Register at www.Toro.com.
Original Instructions (EN)

CE

3405-785 A

Ordering Replacement Parts

To order replacement parts, please supply the part number, the quantity, and the description of each part desired.

Understanding Reference Numbers

Each identified part in an illustration has a reference number. The reference number for a part also appears in the parts list, along with other information about the part.

This catalog uses two special reference number formats, one to indicate parts in a service assembly and another to indicate the quantity of a given part in an illustration.

Service Assembly Reference Numbers

Parts in service assemblies have reference numbers in the form a:b. The a represents the reference number of the entire service assembly and the b represents a sequential number unique to each part within the service assembly.

For example, a wheel assembly might be identified by reference number 6, the tire by 6:1, the valve by 6:2, and the wheel by 6:3. When you order the assembly identified by reference number 6, you receive all parts identified by reference numbers 6:1,6:2, and 6:3. However, you may also order any part individually. Reference numbers of this type appear in illustration and in parts lists.

Reference Numbers Indicating Quantity

In an illustration, if a reference number indicates more than one part, the reference number has the form nX y. The n represents the quantity of the part, the X is the multiplication symbol, and the y represents the reference number.

For example, in an illustration, the reference number 2X 37 means that two of the parts identified by reference number 37 are indicated.

List of Abbreviations

AR: as required

ASM: assembly

BBC: blade brake control

BHTF: button head thread forming

CARR: carriage

CCW: counter clockwise

CW: clockwise

DEG: degrees

DPA: Dual Point Adjustment

ECM: electronic control module

EXT: external

FH: flat head

GA: gauge

HD: heavy-duty

HF: hex flange

HH: hex head

HHF: hex head flange

HHFTF: hex head flange thread forming

HJ: hex jam

HLH: hex lag head

HOC: height-of-cut

HP: high pressure

HSBH: hex socket button head

HSFH: hex socket flat head

HSH: hex socket head

HWH: hex washer head

HWHTF: hex washer head thread forming

HYD: hydraulic

LH: left hand

LP: low pressure

LPG: Liquefied Petroleum Gas

NI: nylon insert

NPTF: national pipe thread fine

PFH: phillips flat head

PPH: phillips pan head

PPHTF: phillips pan head thread forming

PRH: phillips round head

PTH: phillips truss head

PTO: power-take-off

RH: right hand

ROPS: roll-over protection system

RRB: rear roller brush

SFH: slotted fillister head

SHH: slotted hex head

SHWH: slotted hex washer head

SPH: slotted pan head

SQH: square head

SRH: slotted round head

STD: standard

TAP: self tapping

TTH: torx truss head

Contents

Frame and Roll-Over Protection System Assembly . . . 5
Frame Assembly No. 132-7210 . . . 6
Front Axle and Wheel Assembly . . . 7
Front Axle Assembly No. 131-6061-03 . . . 8
Rear Drive Assembly . . . 11
Rear Axle Assembly . . . 12
Bevel Pinion Shaft Assembly Rear Axle Assembly No. 106-1120 . . . 13
Differential Assembly Rear Axle Assembly No. 106-1120 . . . 14
Axle Support Assembly Rear Axle Assembly No. 106-1120 . . . 15
Bevel Gear Case Assembly Drive Axle Assembly No. 106-1120 . . . 16
Bevel Gear Shaft Assembly Rear Axle Assembly No. 106-1120 . . . 17
Axle Case Assembly Rear Axle Assembly No. 106-1120 . . . 18
Axle Assembly Rear Axle Assembly No. 106-1120 . . . 19
Bi-Directional Clutch Assembly No. 95-6296 . . . 20
Tie Rod Assembly No. 98-3871-03 . . . 21
Hydraulic Cylinder Assembly No. 99-2415 . . . 22
Driveshaft Assembly No. 98-5009 . . . 23
Engine, Clutch, Air Cleaner and Drive Shaft Assembly . . . 24
Air Cleaner Assembly No. 104-3427 . . . 26
Driveshaft Assembly No. 131-6087 . . . 27
Engine Mounting and Clutch Assembly . . . 28
Radiator and Cooler Assembly . . . 29
Fuel Tank and Control Panel Assembly . . . 31
Fuel Lines and Filter Assembly . . . 33
Throttle Control Assembly . . . 34
PTO Drive Assembly . . . 35
PTO Driveshaft Assembly No. 108-1366 . . . 36
Traction Pedal Assembly . . . 37
Transmission Linkage Assembly . . . 38
Brake Pedal and Linkage Assembly . . . 39
Hood Assembly . . . 40
Battery Assembly . . . 41
Steering Assembly . . . 42
Steer Valve Assembly No. 131-5624 . . . 43
Hydraulic Assembly . . . 44
Valve Assembly No. 132-7243 . . . 45
Transmission Hydraulic Assembly . . . 46
Hydraulic Pump Assembly No. 133-6385 . . . 48
Crankcase Assembly . . . 50
Oil Pan and Dipstick Assembly . . . 51
Cylinder Head Assembly . . . 52
Gear Case and Oil Filter Cartridge Assembly . . . 53
Cylinder Head Cover Assembly . . . 54
Main Bearing Case Assembly . . . 55
Camshaft and Idle Gear Shaft Assembly . . . 56
Piston and Crankshaft Assembly . . . 57
Fuel Camshaft and Governor Shaft Assembly . . . 58
Idle Apparatus Assembly . . . 59
Stop Solenoid and Fuel Pump Cover Assembly . . . 60
Injection Pump Assembly . . . 61
Governor Assembly . . . 62
Speed Control Plate Assembly . . . 63
Nozzle Holder and Glow Plug Assembly . . . 64
Nozzle Holder Assembly . . . 65

© 2016—The Toro® Company
8111 Lyndale Avenue South
Bloomington, MN 55420

Contact us at www.Toro.com.
Printed in the USA.
All Rights Reserved

Contents (continued)

Alternator and Pulley Assembly 66
Alternator Components Assembly 67
Starter and Flywheel Assembly 68
Starter Component Assembly 69
Water Flange and Thermostat Assembly 70
Water Pump Assembly 71
Valve and Rocker Arm Assembly 72
Inlet and Exhaust Manifold Assembly 73
Miscellaneous Engine Parts 74
Upper Engine Gasket Kit 75
Lower Engine Gasket Kit 76
Attachments and Accessories 77

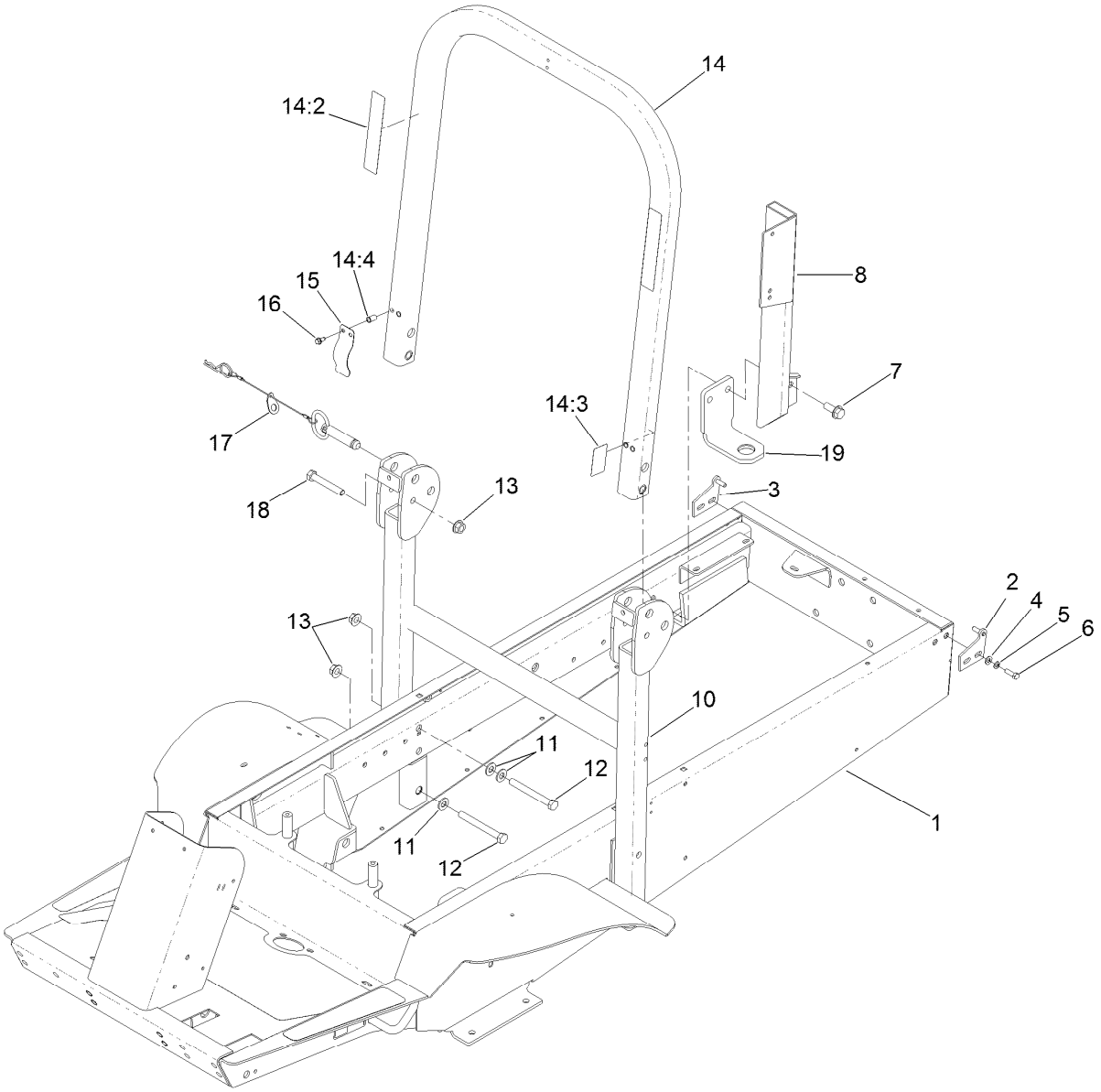

Frame and Roll-Over Protection System Assembly

Ref.	Part Number	Qty.	Description
1	132-7210	1	Frame Assembly
2	105-0004-01	1	LH Hinge Pin ASM
3	105-0003-01	1	RH Hinge Pin ASM
4	3256-23	4	Washer-Flat
5	3253-4	4	Washer-Lock
6	322-5	4	Screw-HH
7	3234-38	8	Screw-HHF
8	105-2513-03	1	Mount-Air Cleaner
10	110-5693-03	1	ROPS-Lower
11	3256-26	6	Washer-Flat
12	325-18	4	Screw-HH

Ref.	Part Number	Qty.	Description
13	32128-23	6	Nut-HF
14	110-5690	1	Upper ROPS ASM
14:2	108-2073	2	Decal-Warning
14:3	108-2074	1	Decal-ROPS
14:4	32148-11	4	Insert-Threaded
15	110-5696	2	Spring-Leaf
16	32144-10	4	Screw-HWH
17	103-4553	2	Pin-Fold, ROPS
18	325-13	2	Screw-HH
19	114-2867-03	4	Bracket-Mount, Engine

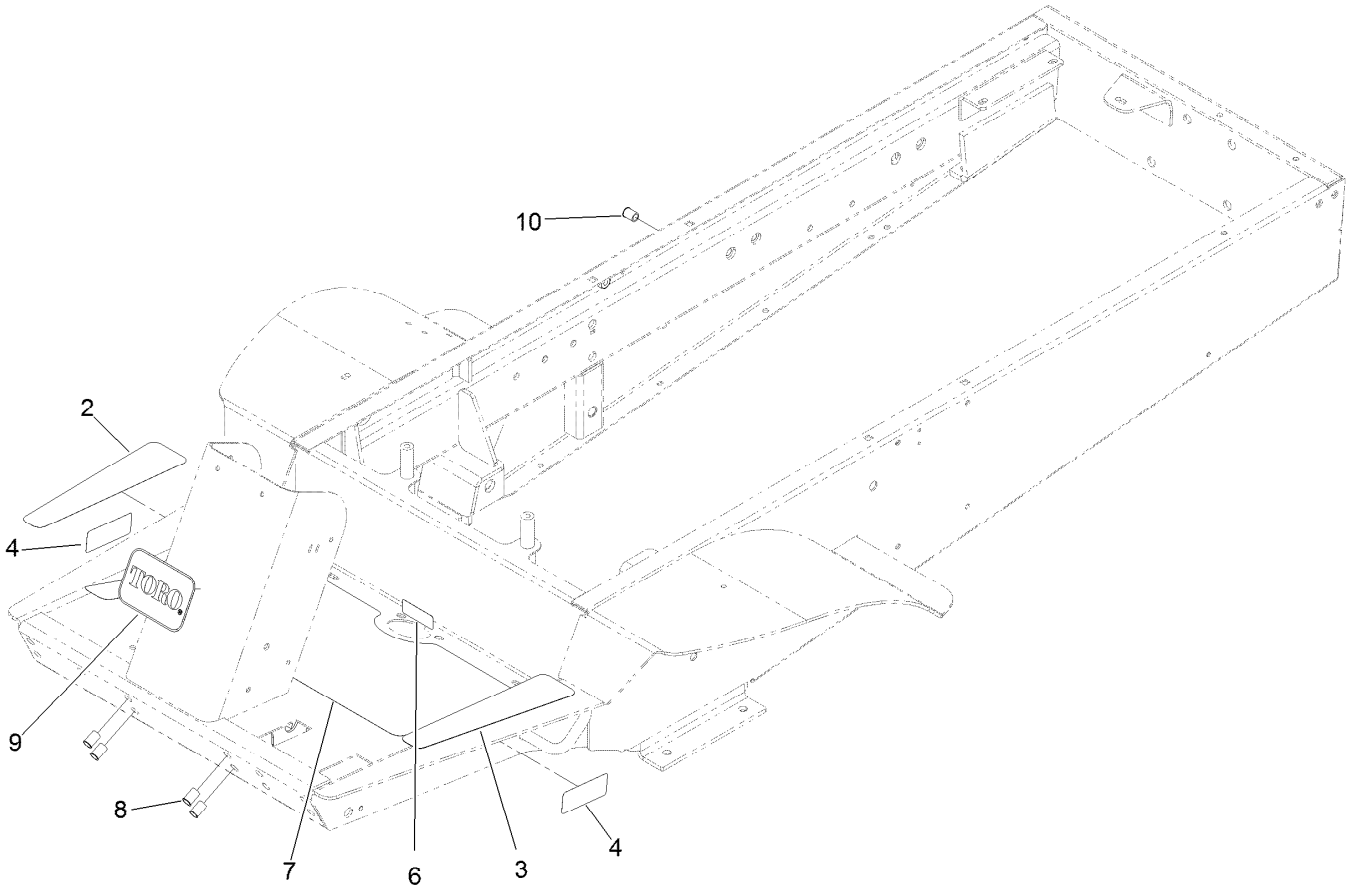

Frame Assembly No. 132-7210

Ref.	*Part Number*	*Qty.*	*Description*
2	93-7834	1	Decal-Footrest, RH
3	66-3200	1	Tread-Footrest, LH
4	106-9206	2	Decal-Torque, Wheel
6	93-6686	1	Decal-Oil, HYD
7	105-7160	1	Pad-Floor
8	32148-10	4	Insert-Nut
9	67-1300	1	Decal
10	32148-9	1	Insert-Nut

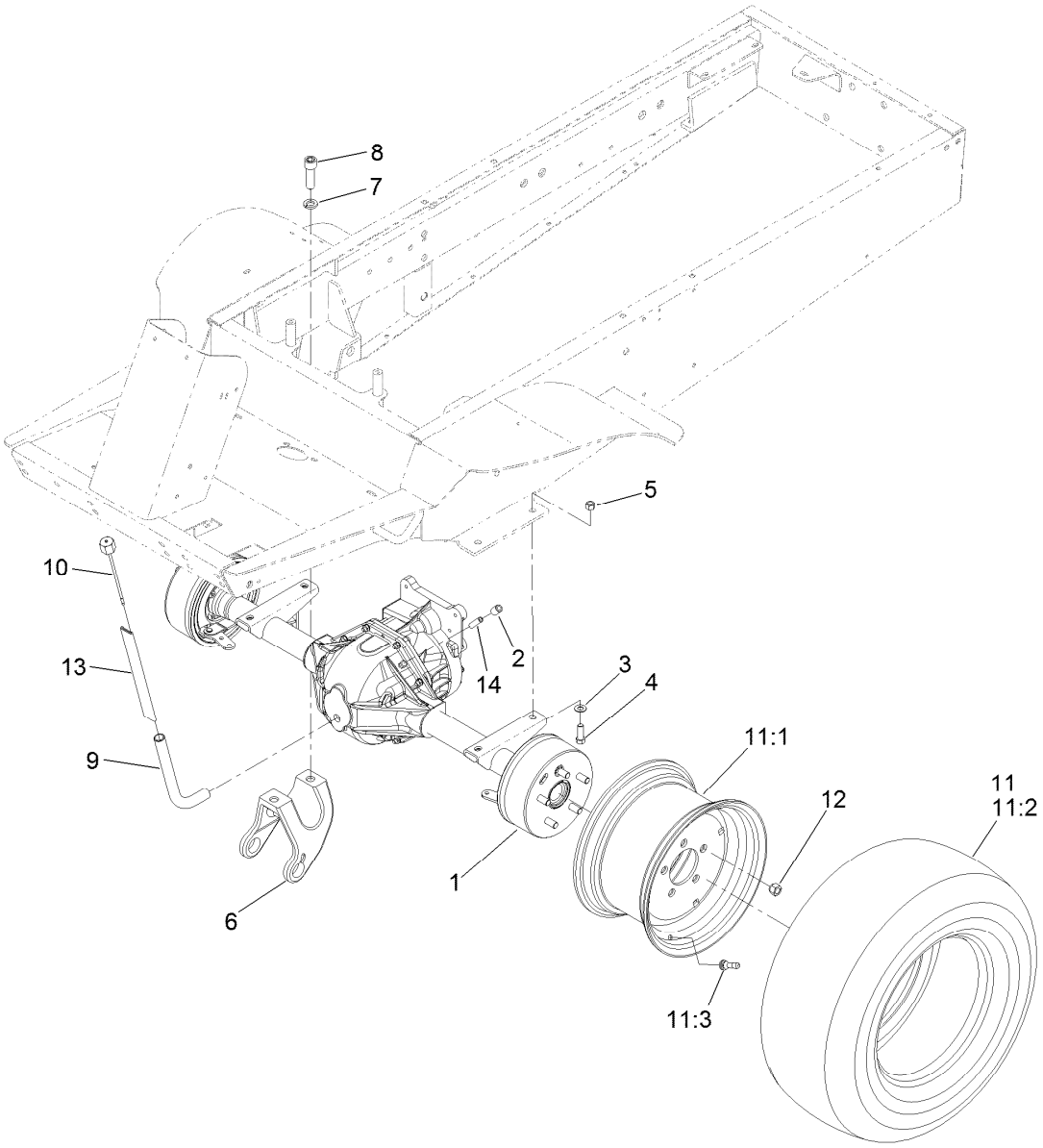

Front Axle and Wheel Assembly

Ref.	Part Number	Qty.	Description
1	131-6061-03	1	Axle ASM
2	2810-1	1	Coupling-Pipe
3	3256-25	4	Washer-Flat
4	324-5	4	Screw-HH
5	3296-48	4	Nut-Lock, NI
6	110-9678	2	Bracket-Carrier
7	3253-8	4	Washer-Lock
8	3273-38	4	Screw-HSH
9	105-7169	1	Tube-Fill, Oil

Ref.	Part Number	Qty.	Description
10	105-7172	1	Dipstick ASM
11	117-0821	2	Wheel And Tire ASM
11:1	117-0822	1	Wheel
11:2	117-0823	1	Tire-Standard
11:3	232-27	1	Stem-Valve
12	242-50	10	Nut-Lug
13	110-5651	1	Sleeve-Protective
14	289-6	1	Nipple-Pipe

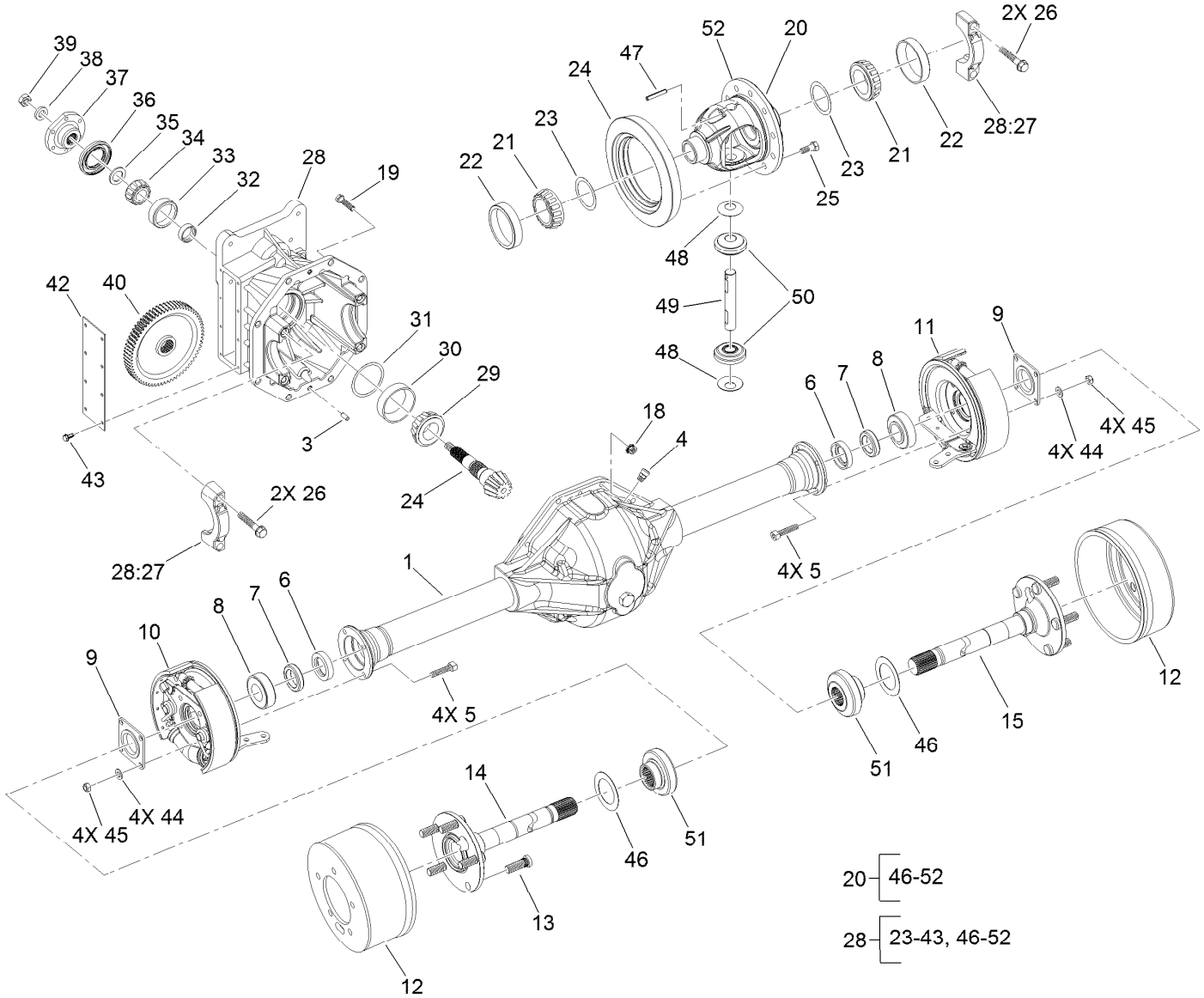

Front Axle Assembly No. 131-6061-03

Ref.	Part Number	Qty.	Description
1	110-9670	1	Lower Housing ASM
3	21-8270	2	Pin-Dowel
4	72-9420	1	Vent
5	94-6934	8	Screw-HH
6	24-8840	2	Ring-Retaining, Wheel Bearing
7	99-6969	2	Seal-Oil, Wheel End
8	21-8180	2	Bearing ASM
9	28-0670	2	Seal-Grease
10	132-7284	1	RH Brake ASM
11	132-7285	1	LH Brake ASM
12	110-3072	2	Drum-Brake
13	106-9205	10	Stud-Wheel
14	110-3073	1	Shaft-Axle, RH
15	110-3074	1	Shaft-Axle, LH
18	32149-5	8	Nut-Keps
19	3210-8	8	Screw-HH
20	110-4136	1	Differential Case ASM

Ref.	Part Number	Qty.	Description
21	254-65	2	Bearing-Roller, Cone
22	254-66	2	Cup-Bearing, Roller
23	21-8090	2	Shim-Bearing, Differential (.003)
23	21-8100	2	Shim-Bearing, Differential (.005)
23	21-8110	2	Shim-Bearing, Differential (.010)
23	21-8120	2	Shim-Bearing, Differential (.030)
24	92-1676	1	Gear And Pinion ASM
25	21-7770	5	Screw-Gear, Drive
26	92-1773	4	Screw-HHF
28	132-7286	1	Carrier Sub ASM
28:27		2	Cap-Bearing ●
29	43-6760	1	Bearing-Roller, Cone Taper
30	43-6750	1	Bearing-Taper, Cup
31	43-6710	1	Shim-Pinion (.003)

● Not serviced separately

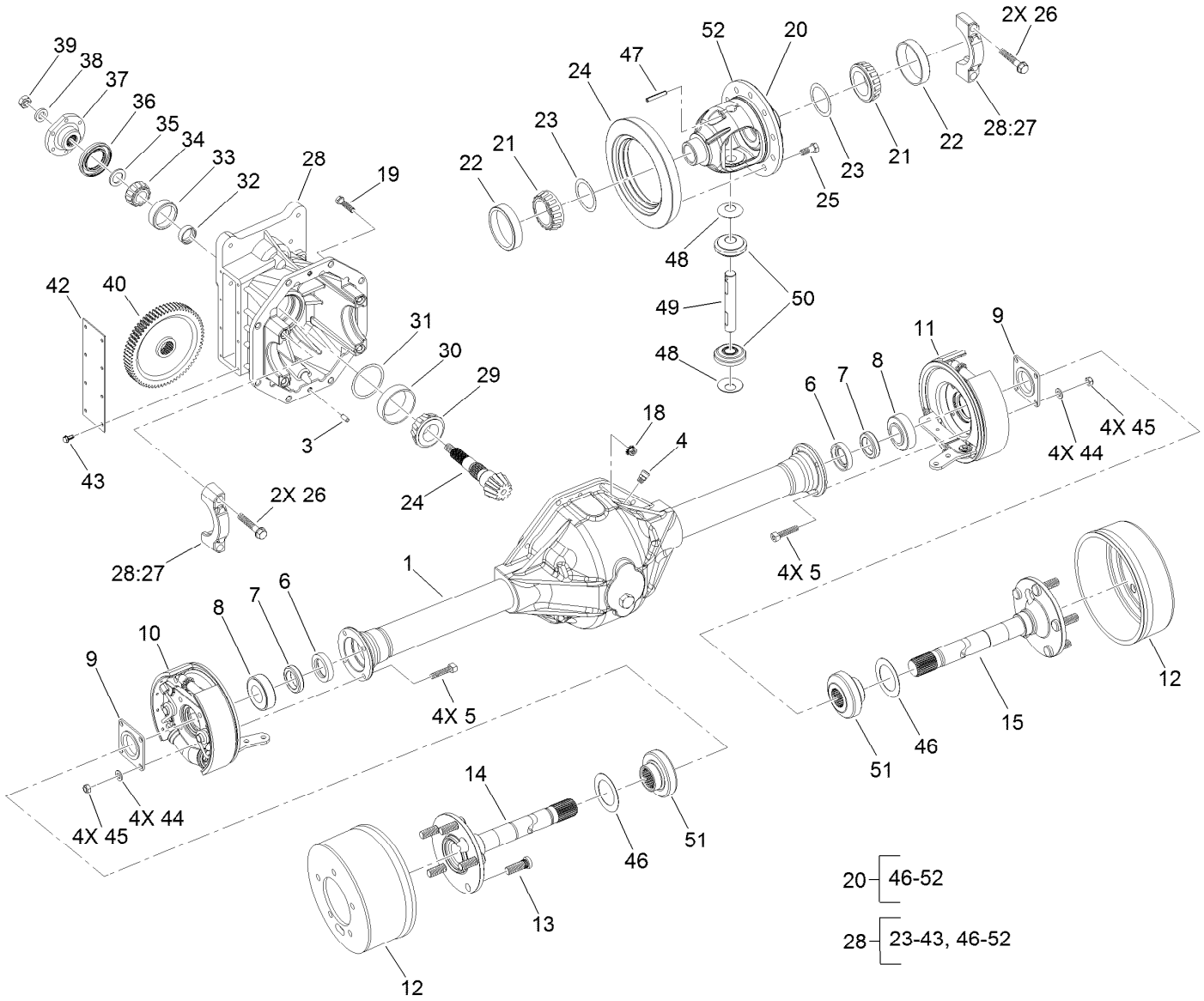

Front Axle Assembly No. 131-6061-03 (continued)

Ref.	Part Number	Qty.	Description
31	43-6711	1	Shim-Pinion (.005)
31	43-6712	1	Shim-Pinion (.010)
31	43-6713	1	Shim-Pinion (.030)
32	21-8020	1	Spacer-Bearing
33	254-90	1	Bearing-Cup
34	254-91	1	Cone-Bearing
35	72-3570	1	Shim-Bearing, Front (.094)
35	72-3571	1	Shim-Bearing, Front (.096)
35	72-3572	1	Shim-Bearing, Front (.098)
35	72-3573	1	Shim-Bearing, Front (.100)
35	72-3574	1	Shim-Bearing, Front (.102)
35	72-3575	1	Shim-Bearing, Front (.104)
35	72-3576	1	Shim-Bearing, Front (.106)
35	72-3577	1	Shim-Bearing, Front (.108)
35	72-3578	1	Shim-Bearing, Front (.110)
35	72-3580	1	Shim-Bearing, Front (.112)
35	72-3581	1	Shim-Bearing, Front (.114)
35	72-3582	1	Shim-Bearing, Front (.116)

Ref.	Part Number	Qty.	Description
35	72-3583	1	Shim-Bearing, Front (.118)
35	72-3584	1	Shim-Bearing, Front (.120)
35	72-3585	1	Shim-Bearing, Front (.125)
35	72-3586	1	Shim-Bearing, Front (.127)
35	72-3587	1	Shim-Bearing, Front (.129)
35	72-3588	1	Shim-Bearing, Front (.131)
35	72-3590	1	Shim-Bearing, Front (.133)
35	72-3591	1	Shim-Bearing, Front (.135)
35	72-3592	1	Shim-Bearing, Front (.137)
35	72-3593	1	Shim-Bearing, Front (.139)
35	72-3594	1	Shim-Bearing, Front (.141)
35	72-3595	1	Shim-Bearing, Front (.143)
35	72-3596	1	Shim-Bearing, Front (.145)
35	72-3597	1	Shim-Bearing, Front (.147)
35	72-3598	1	Shim-Bearing, Front (.149)
35	72-3600	1	Shim-Bearing, Front (.151)
36	71-4330	1	Seal
37	68-7010	1	Flange

● Not serviced separately

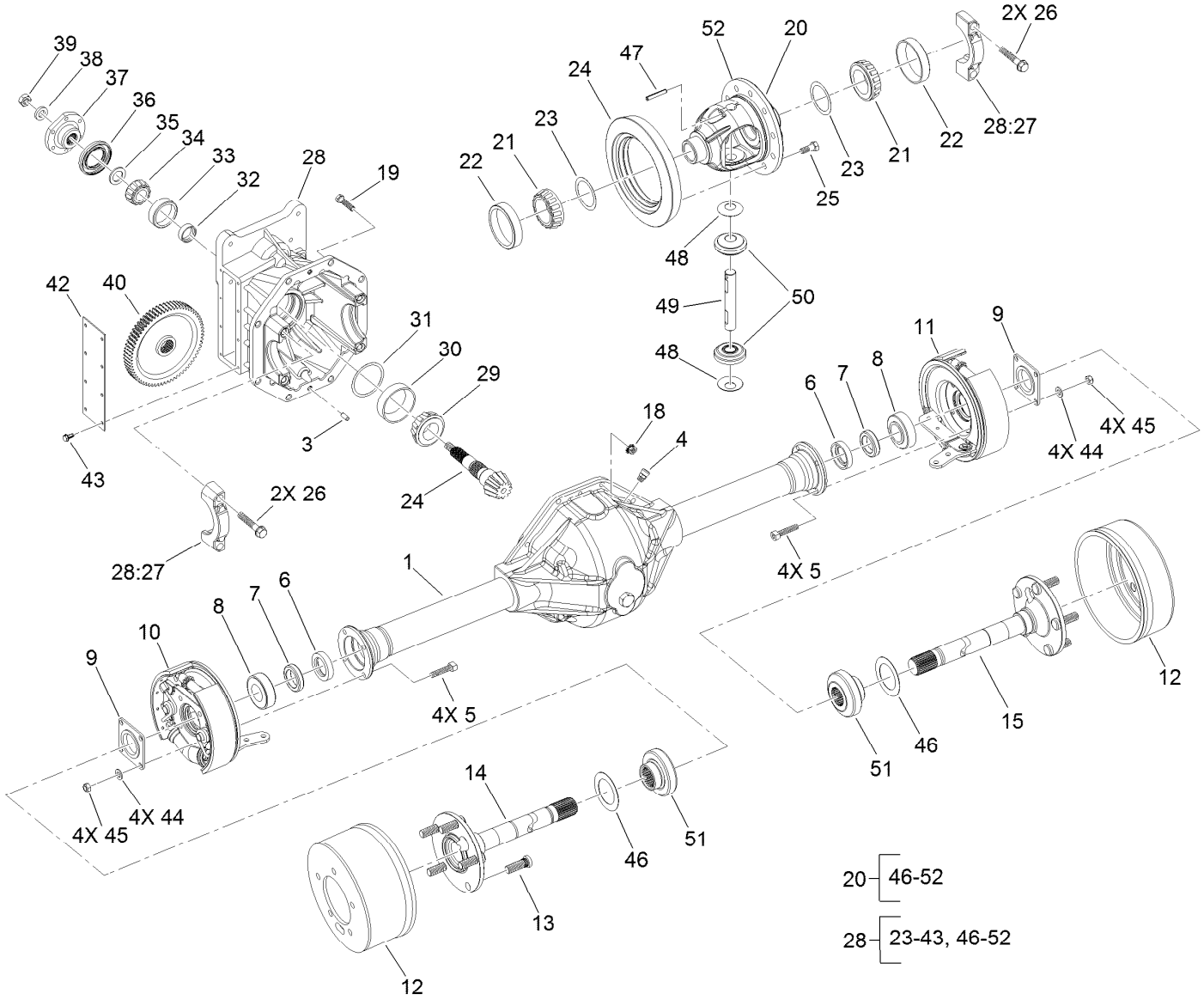

Front Axle Assembly No. 131-6061-03 (continued)

Ref.	Part Number	Qty.	Description
38	71-4340	1	Washer
39	71-4350	1	Nut
40	86-7230	1	Gear-Input, Transmission
42	21-7830	1	Cover-Gear
43	32144-112	8	Screw-HWH
44	94-6936	8	Washer-Hardened
45	94-6935	8	Locknut

Ref.	Part Number	Qty.	Description
46	110-3077	2	Washer-Thrust
47	42150	1	Pin-Lock, Pinion
48	21-7730	2	Washer-Thrust, Pinion
49	21-7700	1	Shaft-Mate, Pinion
50	110-3079	2	Pinion-Differential
51	110-3078	2	Gear-Differential
52	21-7670	1	Case-Differential

● Not serviced separately

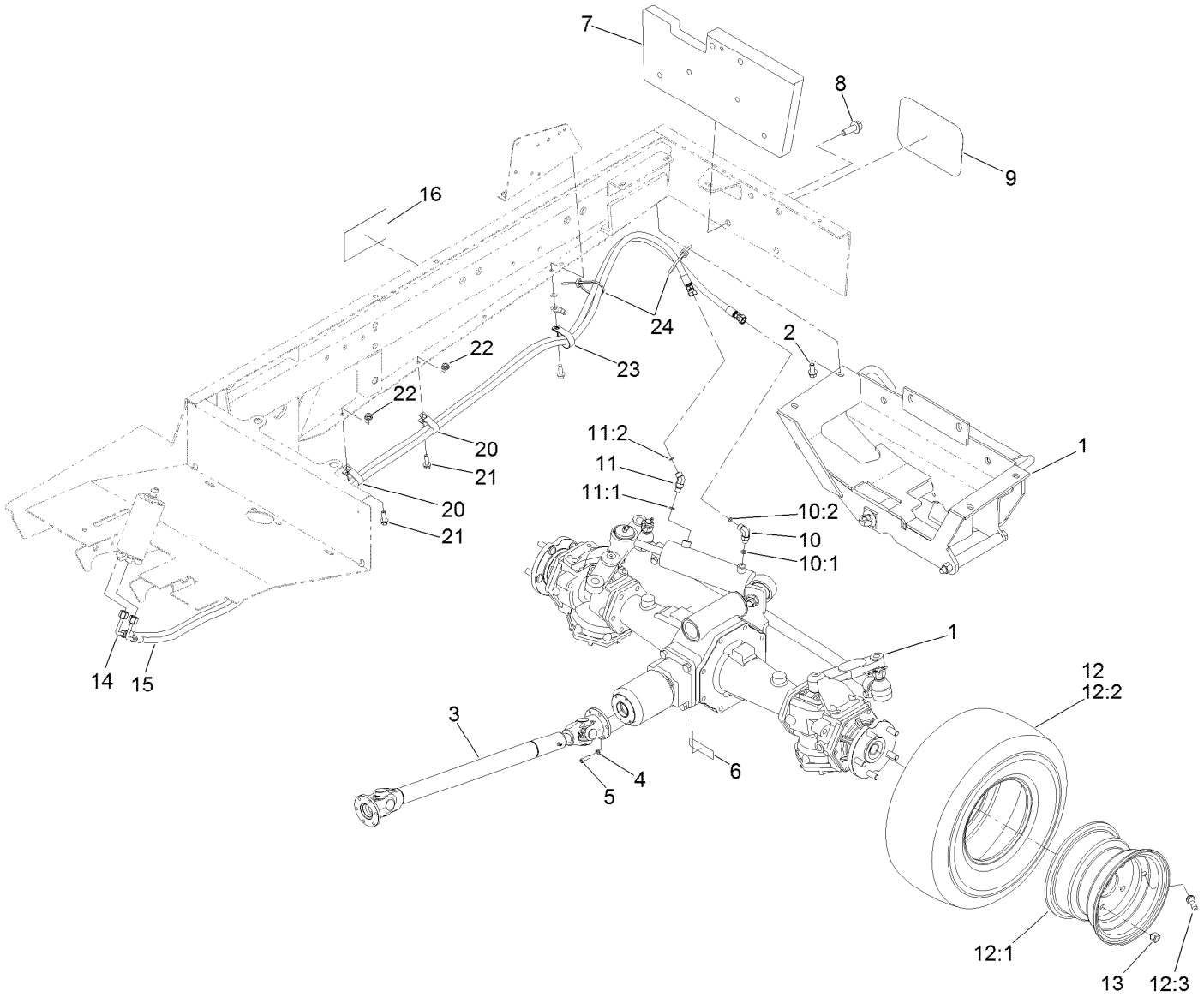

Rear Drive Assembly

Ref.	Part Number	Qty.	Description
1		1	Rear Axle ASM ●
2	3234-25	4	Screw-HHF
3	98-5009	1	Driveshaft ASM
4	3253-3	12	Washer-Lock
5	3274-8	12	Screw-HSH
6	93-6697	1	Decal-Lube
7	110-1995-03	1	Weight-Rear, Inside
8	100-6116	2	Screw-HHF
9	62-7400	1	Decal
10	340-132	1	Fitting-HYD, 90 DEG
10:1	237-78	1	O-Ring
10:2	237-21	1	O-Ring
11	340-103	1	Fitting-HYD, 45 DEG
11:1	237-78	1	O-Ring

Ref.	Part Number	Qty.	Description
11:2	237-21	1	O-Ring
12		2	Tire And Wheel ASM ●
12:1	105-7846	1	Wheel
12:2	231-122	1	Tire-4-Ply
12:3	232-27	1	Stem-Valve
13	93-5268	10	Nut-Lug
14	108-2084	1	Hose ASM
15	108-2085	1	Hose ASM
16	94-8099	2	Decal
20	92-5753	2	Clamp-Hose
21	3234-17	2	Screw-HHF
22	32128-20	2	Nut-HF
23	2412-74	1	R-Clamp
24	3290-378	2	Tie-Cable

● Not serviced separately

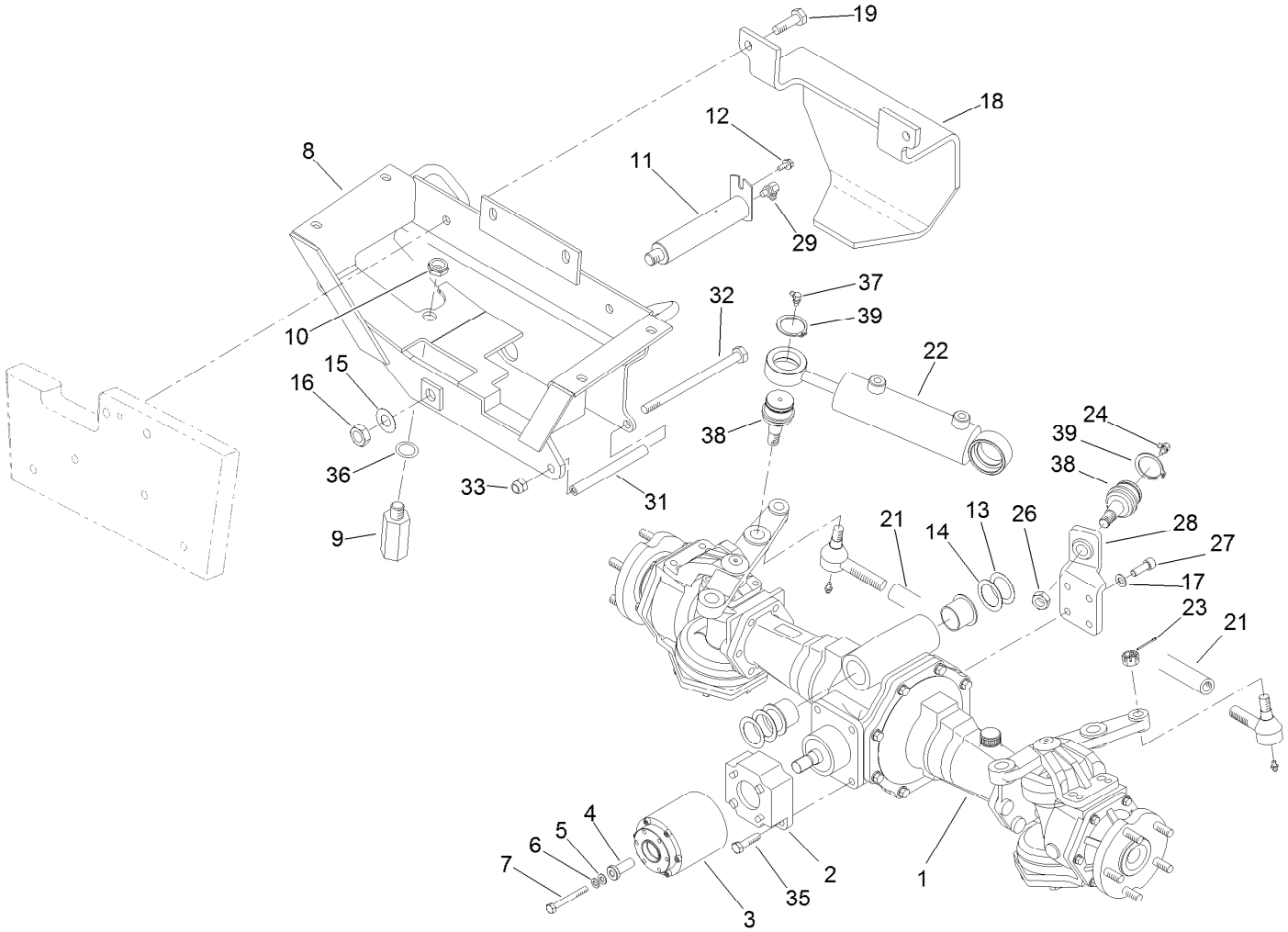

Rear Axle Assembly

Ref.	Part Number	Qty.	Description
1	106-1120	1	Rear Axle ASM
2	98-3860-03	1	Adaptor-Locator, Clutch
3	95-6296	1	Clutch-Bidirectional
4	98-1823	1	Spacer
5	33094-00	1	Washer-Plain
6	3253-4	1	Washer-Lock
7	33114-050	1	Screw-HH
8	105-4295-03	1	Axle Support ASM
9	98-3863	1	Stop-Oscillation
10	3296-15	1	Nut-Lock, NI
11	99-8434-03	1	Rear Axle Pin ASM
12	32144-14	1	Screw-HWHTF
13	99-8431	2	Washer-Thrust
14	99-8432	1	Washer-Thrust
15	71-4540	1	Washer-Thrust
16	32146-20	1	Nut-Hex
17	48-9220	4	Washer
18	99-2405-03	1	Bumper

Ref.	Part Number	Qty.	Description
19	100-6116	2	Screw-HHF
21	98-3871-03	1	Tie Rod ASM
22	99-2415	1	HYD Cylinder ASM
23	3272-11	2	Pin-Cotter
24	302-11	1	Fitting-Lube, 45 DEG
26	3220-6	4	Nut-Jam
27	115-4522	4	Screw-Cap, HH
28	98-3862-03	1	Bracket-Support, Cylinder
29	302-33	1	Fitting-Grease
31	99-2404-03	1	Stop-Rear Axle, LH
32	325-36	1	Screw-HH
33	3296-23	1	Nut-Lock, NI
35	87-3700	2	Screw-Cap, HH
36	3256-28	1	Washer-Flat
37	302-5	1	Fitting-Grease
38	106-6774	2	Joint-Ball
39	32151-104	2	Ring-Retaining, External

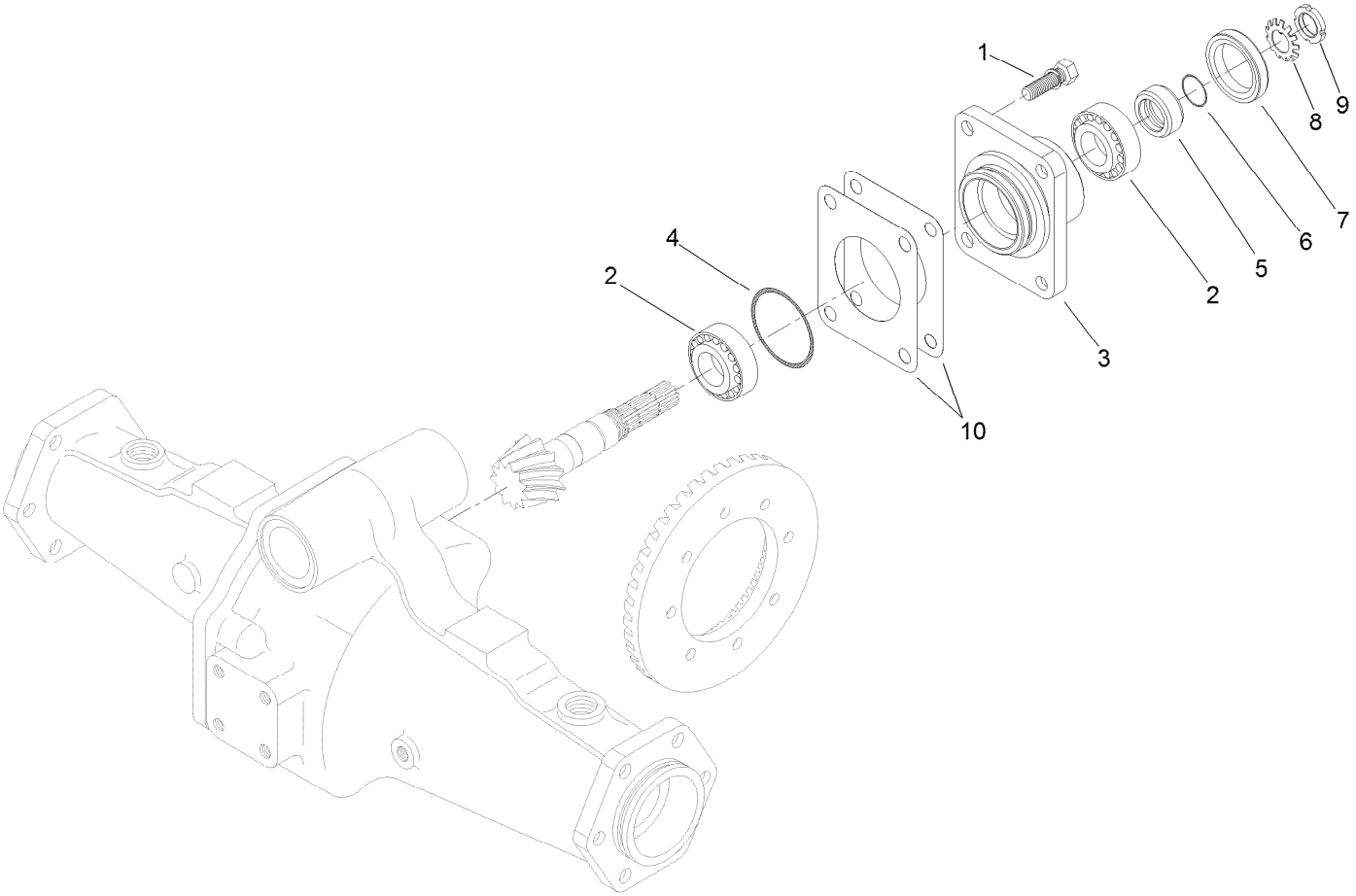

Bevel Pinion Shaft Assembly
Rear Axle Assembly No. 106-1120

Ref.	*Part Number*	*Qty.*	*Description*
1	99-7575	4	Bolt
2	99-7570	2	Bearing-Roller, Taper
3	95-7535	1	Case-Bearing
4	106-1065	1	O-Ring
5	99-7572	1	Collar-Seal, Oil
6	106-1066	1	O-Ring
7	99-7574	1	Seal-Oil
8	99-7559	1	Washer-Lock
9	99-7560	1	Nut-Lock
10	99-7550	2	Shim 0.1
10	99-7551	2	Shim 0.2

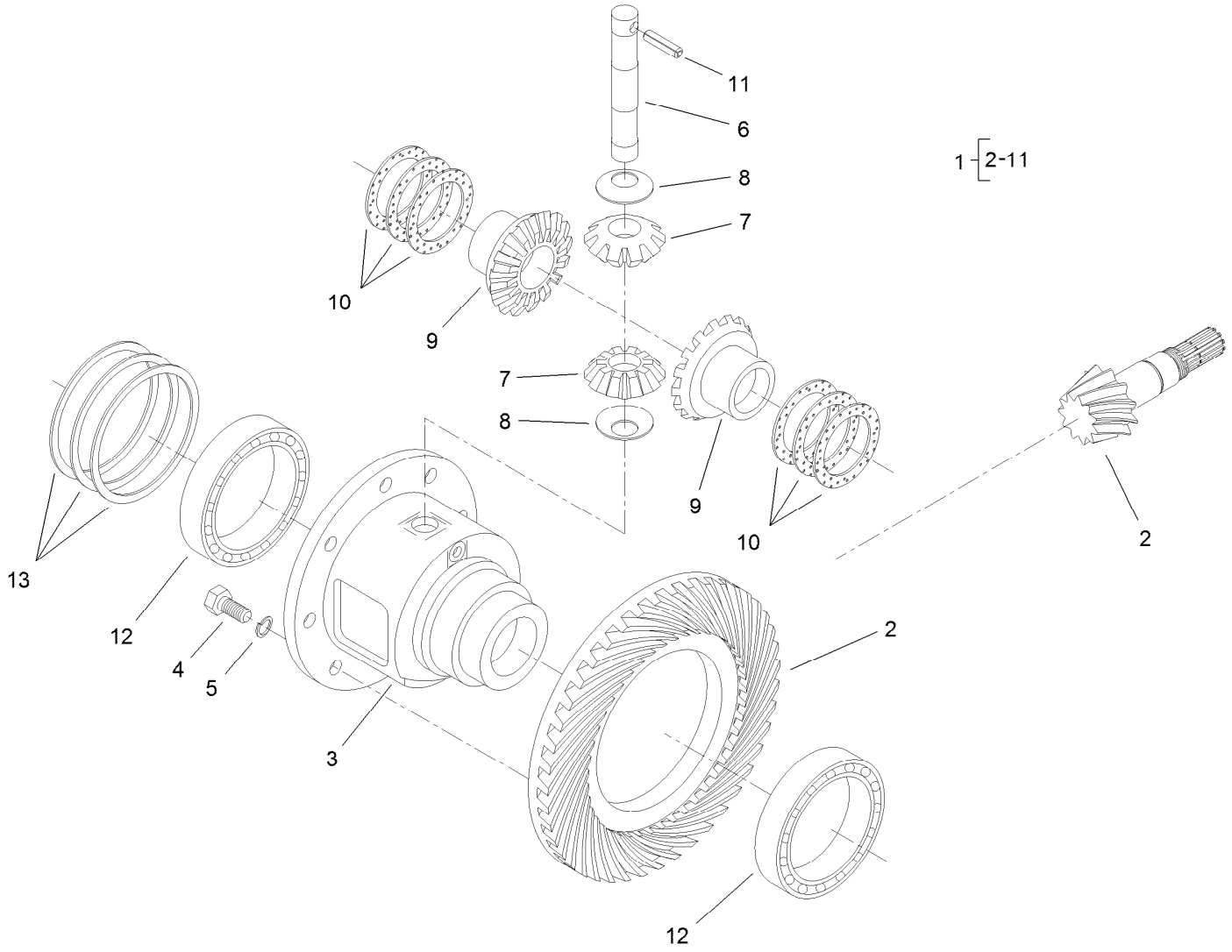

Differential Assembly
Rear Axle Assembly No. 106-1120

Ref.	Part Number	Qty.	Description
1	95-7503	1	Differential ASM
2	106-1093	1	Ring And Pinion, Matched Set
3	95-7502	1	Case-Differential
4	99-7576	8	Bolt
5	3253-4	8	Washer-Lock
6	99-7578	1	Shaft-Differential
7	99-7579	2	Pinion-Differential
8	99-7580	2	Washer-Differential

Ref.	Part Number	Qty.	Description
9	99-7581	2	Gear-Differential
10	99-7582	2	Washer-Differential
10	99-7583	2	Washer-Differential
10	99-7584	2	Washer-Differential
11	99-7588	1	Pin-Spring
12	99-7562	2	Bearing-Ball
13	99-7585	2	Shim 0.1
13	99-7586	2	Shim 0.2
13	99-7587	2	Shim 0.4

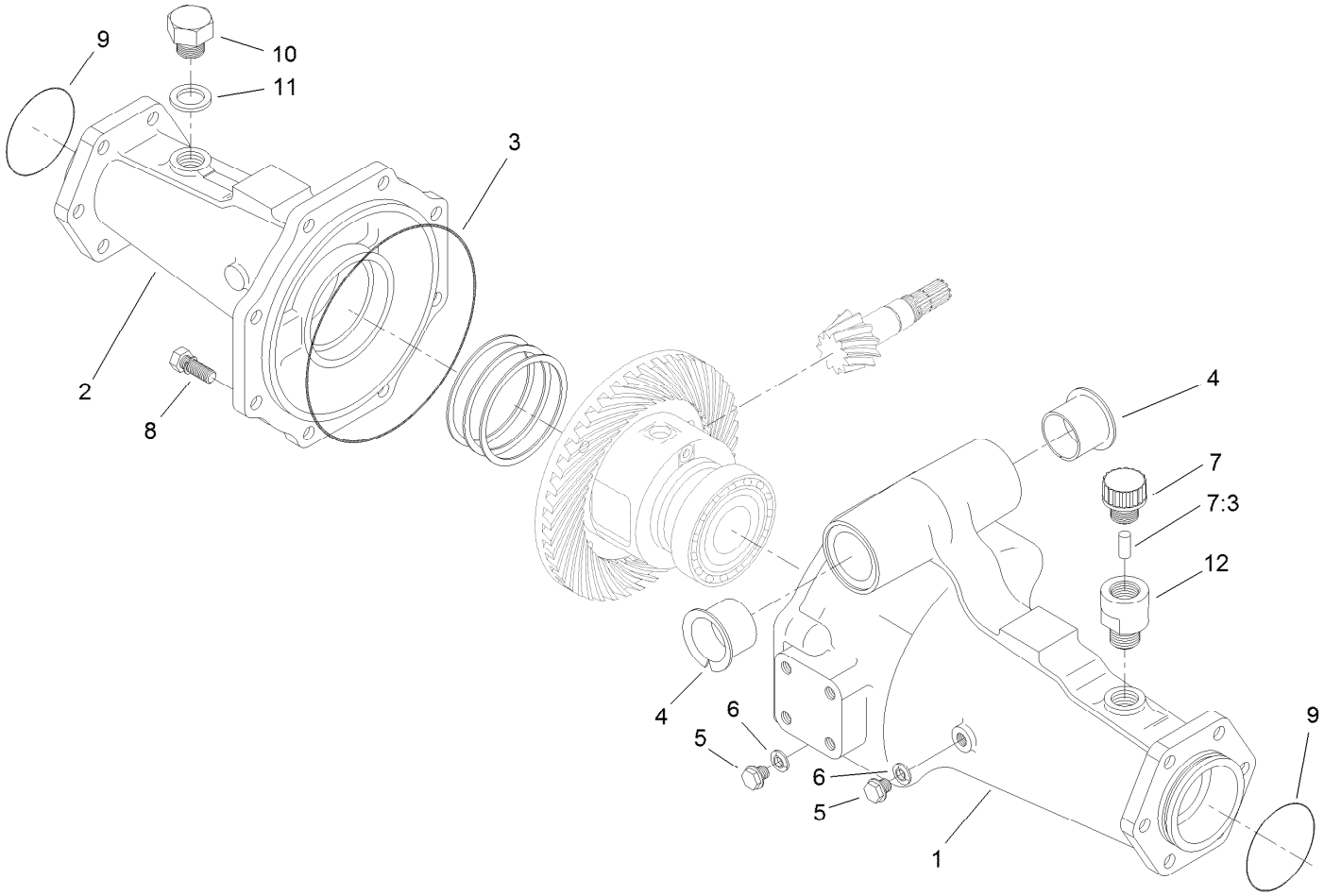

Axle Support Assembly
Rear Axle Assembly No. 106-1120

Ref.	*Part Number*	*Qty.*	*Description*
1	95-7508	1	Support-Axle
2	95-7506	1	Support-Axle
3	106-1067	1	O-Ring
4	95-7537	2	Bushing-Flanged
5	99-7589	2	Plug
6	99-7590	2	Washer-Seal
7	110-4812	1	Axle Vent ASM
7:3	110-4815	1	Insert-Filter, Foam
8	99-7592	8	Bolt
9	106-1068	2	O-Ring
10	104-8643	1	Plug
11	104-8644	1	O-Ring
12	104-2377	1	Extension-Vent

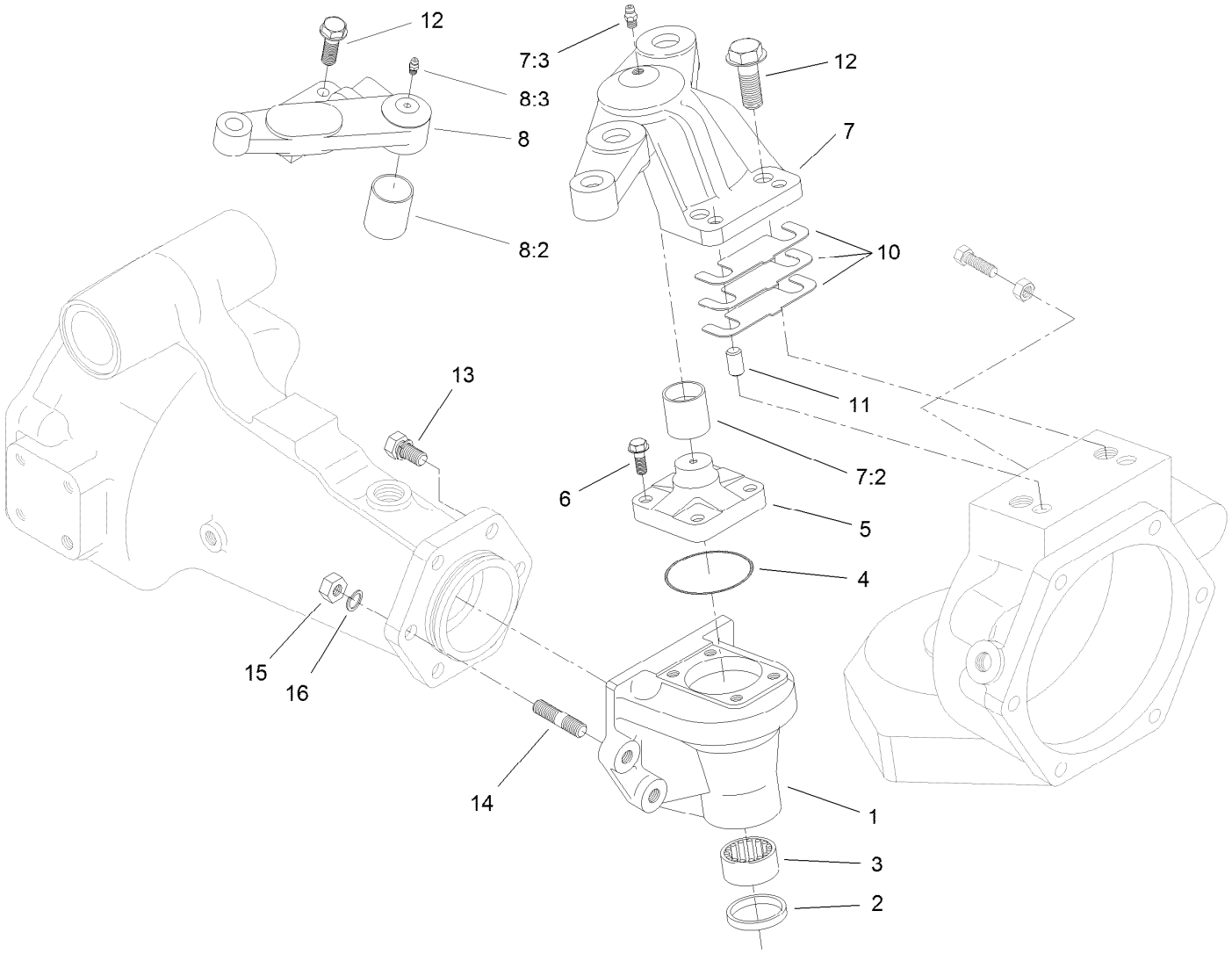

Bevel Gear Case Assembly
Drive Axle Assembly No. 106-1120

Ref.	Part Number	Qty.	Description
1	106-1099	2	Case-Gear, Bevel
2	99-7594	2	Seal-Oil
3	99-7595	2	Bearing-Needle
4	106-1069	2	O-Ring
5	104-2373	2	Knuckle
6	104-2374	8	Bolt
7	110-4757	1	LH Axle Case Support ASM
7:2	99-7529	1	Bushing
7:3	99-7528	1	Nipple-Grease
8	110-4756	1	RH Axle Case Support ASM
8:2	99-7529	1	Bushing

Ref.	Part Number	Qty.	Description
8:3	99-7528	1	Nipple-Grease
10	95-7547	2	Shim 0.1
10	95-7548	2	Shim 0.2
10	95-7549	2	Shim 0.3
11	99-7597	4	Pin-Dowel
12	99-7598	4	Bolt
13	99-7599	8	Bolt
14	99-7525	4	Stud
15	99-7526	4	Nut
16	99-7527	4	Washer-Spring

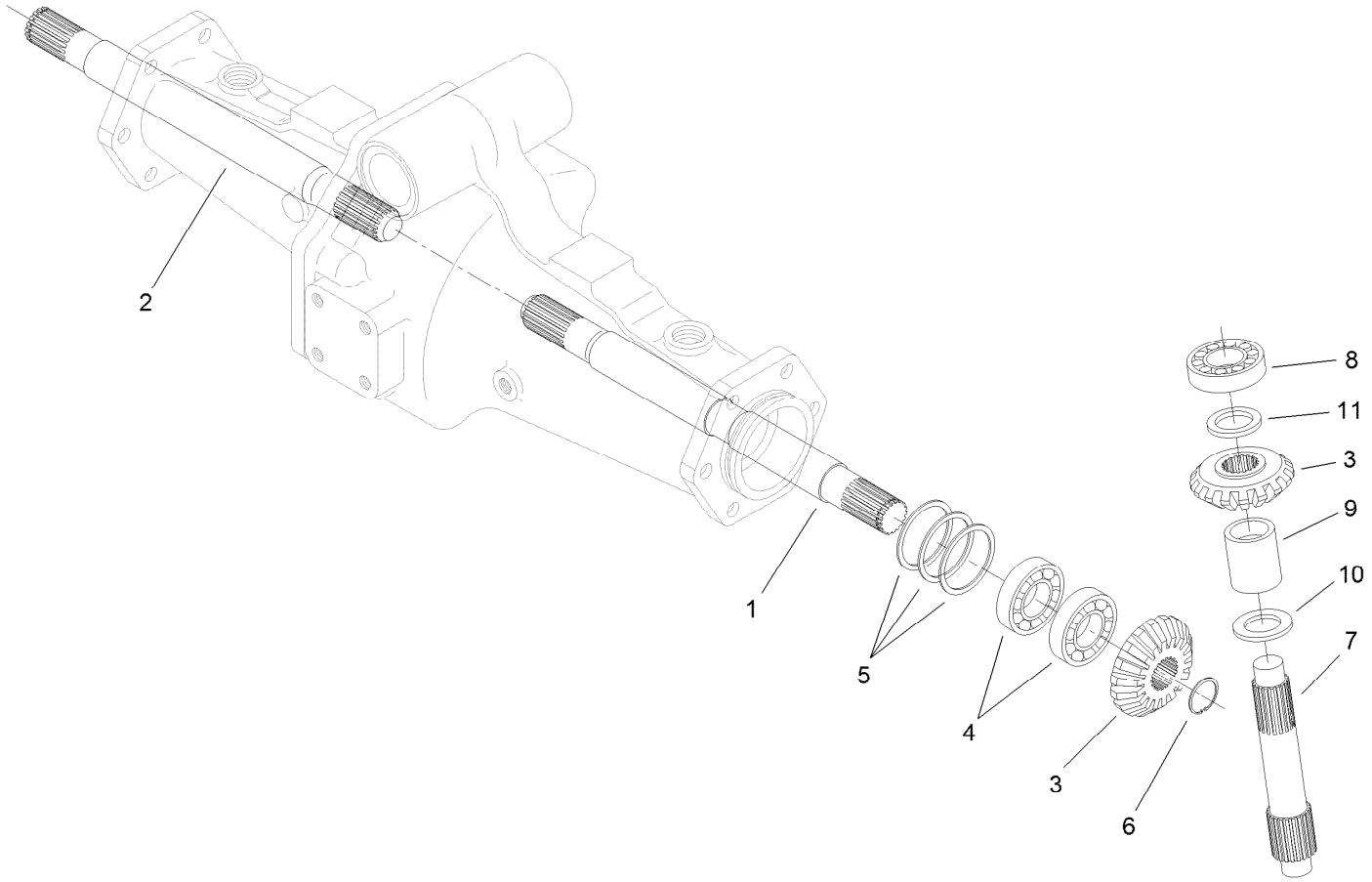

Bevel Gear Shaft Assembly
Rear Axle Assembly No. 106-1120

Ref.	*Part Number*	*Qty.*	*Description*
1	95-7509	1	Shaft-Gear, Differential
2	95-7512	1	Shaft-Gear, Differential
3	95-7518	4	Gear-Bevel, 18 Tooth
4	99-7530	4	Bearing-Ball
5	99-7552	2	Shim 0.1
5	99-7553	2	Shim 0.2
5	99-7554	2	Shim 0.5
6	99-7531	2	Clip
7	106-1101	2	Shaft-Gear, Bevel
8	99-7532	2	Bearing-Roller, Taper
9	95-7543	2	Spacer
10	99-7533	2	Collar-Thrust
11	99-7558	2	Collar

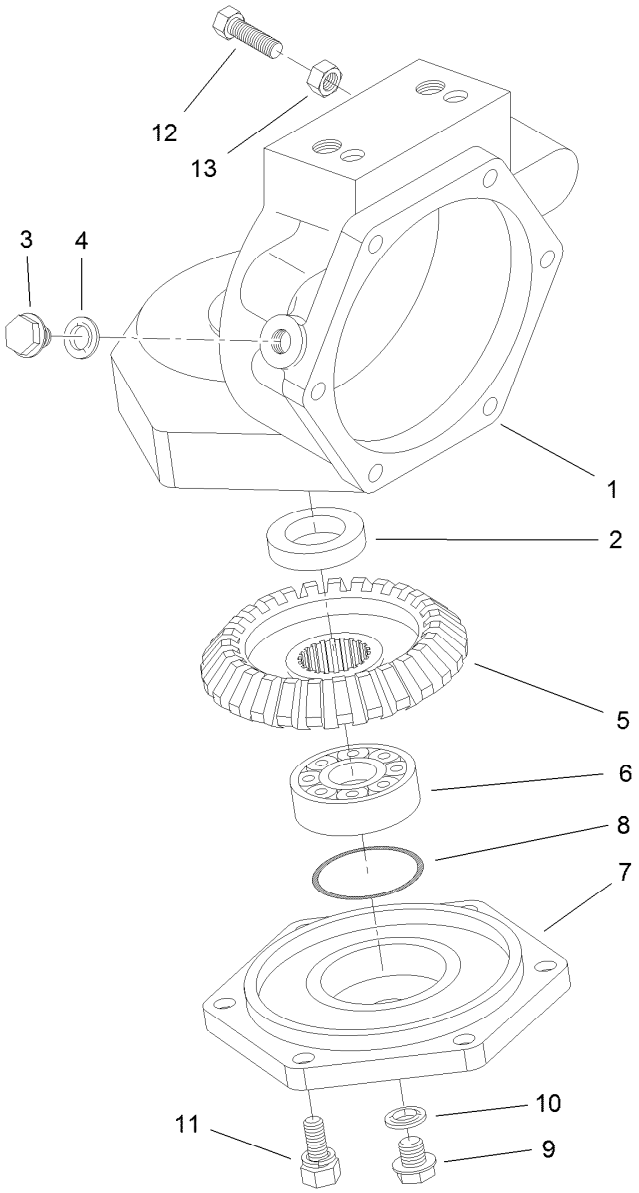

Axle Case Assembly
Rear Axle Assembly No. 106-1120

Ref.	*Part Number*	*Qty.*	*Description*
1	106-1100	2	Case-Axle
2	99-7594	2	Seal-Oil
3	99-7535	2	Plug
4	99-7536	2	Washer-Seal
5	95-7528	2	Gear-Bevel, 27 Tooth
6	99-7532	2	Bearing-Roller, Taper
7	95-7526	2	Cover-Axle
8	106-1072	2	O-Ring
9	99-7589	2	Plug
10	99-7590	2	Washer-Seal
11	99-7596	12	Bolt
12	106-1102	2	Bolt-Stop
13	106-1103	2	Nut

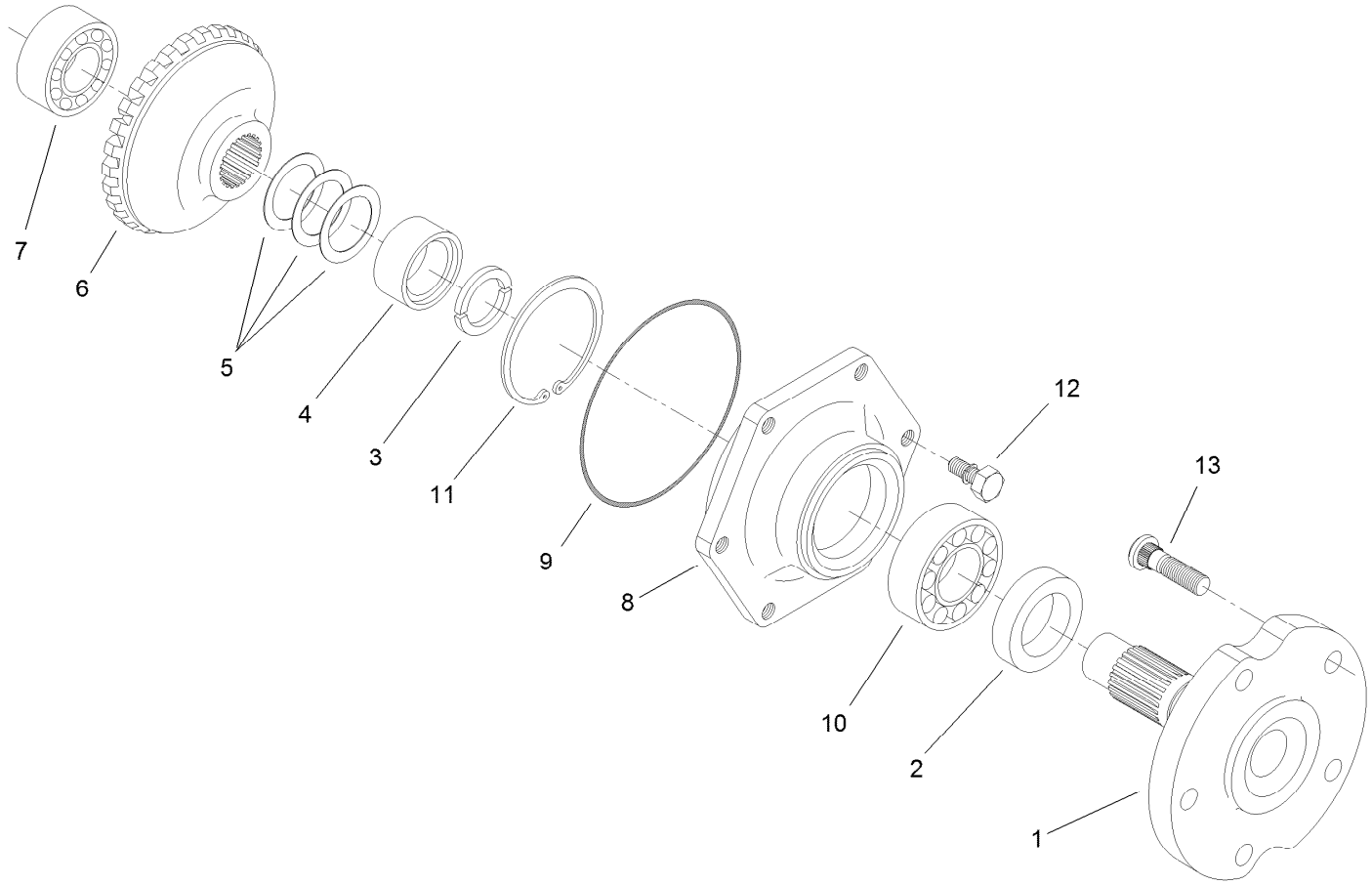

Axle Assembly
Rear Axle Assembly No. 106-1120

Ref.	*Part Number*	*Qty.*	*Description*
1	95-7522	2	Axle
2	99-7564	2	Seal-Oil
3	95-7544	4	Clip
4	95-7523	2	Spacer
5	99-7555	2	Shim 0.3
5	99-7556	2	Shim 0.2
5	99-7557	2	Shim 0.5
6	95-7525	2	Gear-Bevel, 27 Tooth
7	99-7534	2	Bearing-Ball
8	95-7521	2	Cover-Axle
9	106-1071	2	O-Ring
10	99-7561	2	Bearing-Ball
11	99-7539	2	Clip
12	99-7596	12	Bolt
13	99-7563	10	Stud

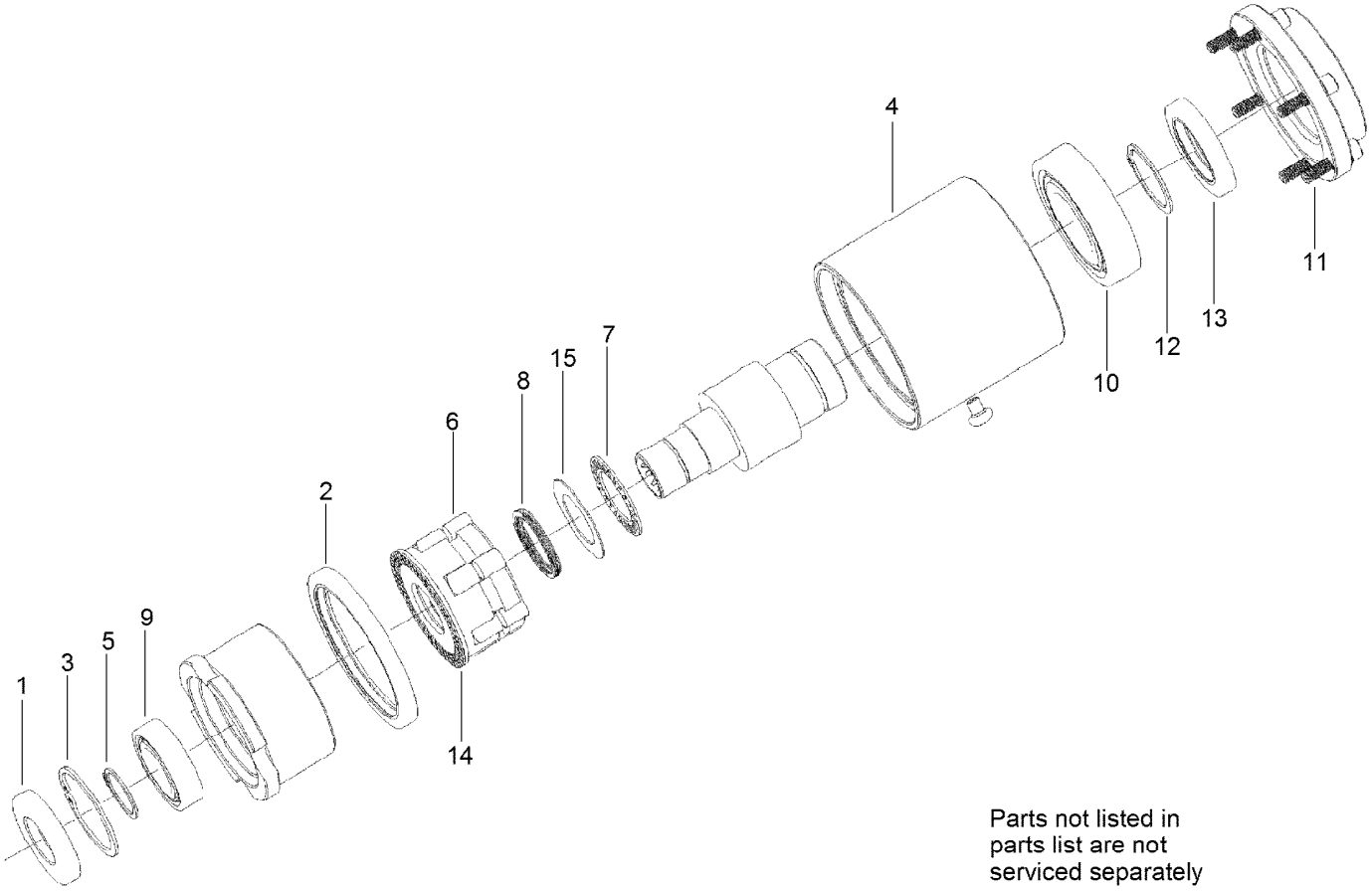

Bi-Directional Clutch Assembly No. 95-6296

Ref.	*Part Number*	*Qty.*	*Description*
1	100-6589	1	Seal-Oil
2	100-6593	1	Seal-Oil
3	32151-75	1	Ring-Retaining
4	100-6596	1	Screw-PPH
5	100-6597	1	Ring-Snap, External
6	93-8925	6	Roller
7	93-8919	1	Bearing-Needle, Thrust
8	93-8923	1	Spring-Wave
9	99-2902	1	Bearing
10	92-9705	1	Bearing
11	3245-6	6	Screw-HSH
12	32120-84	1	Ring-Snap, External
13	71-6790	1	Seal-Oil
14	100-2568	1	Roll Cage ASM
15	93-8929	1	Washer-Thrust

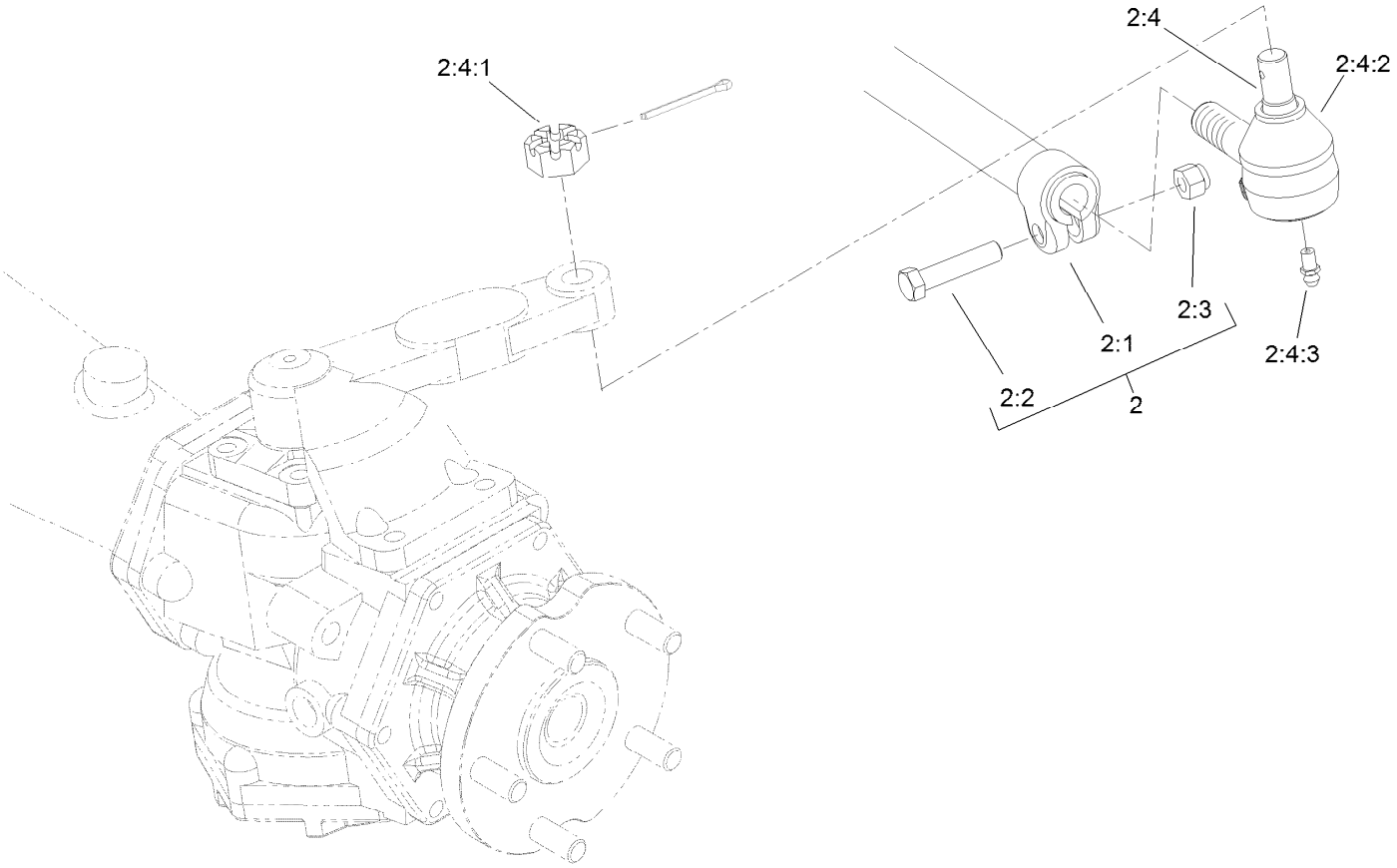

Tie Rod Assembly No. 98-3871-03

Ref.	*Part Number*	*Qty.*	*Description*
2		1	Tie Rod ASM ■
2:1	99-2412-03	1	Rod And Clamp ASM
2:2	323-9	2	Screw-HH
2:3	3296-39	2	Nut-Lock, NI
2:4	71-4740	2	End-Rod, Tie (RH)
2:4:1	105-7941	1	Nut-Hex, Slotted ●
2:4:2	105-7835	1	Seal ●
2:4:3	302-5	1	Fitting-Grease

● Not illustrated

■ Not serviced separately

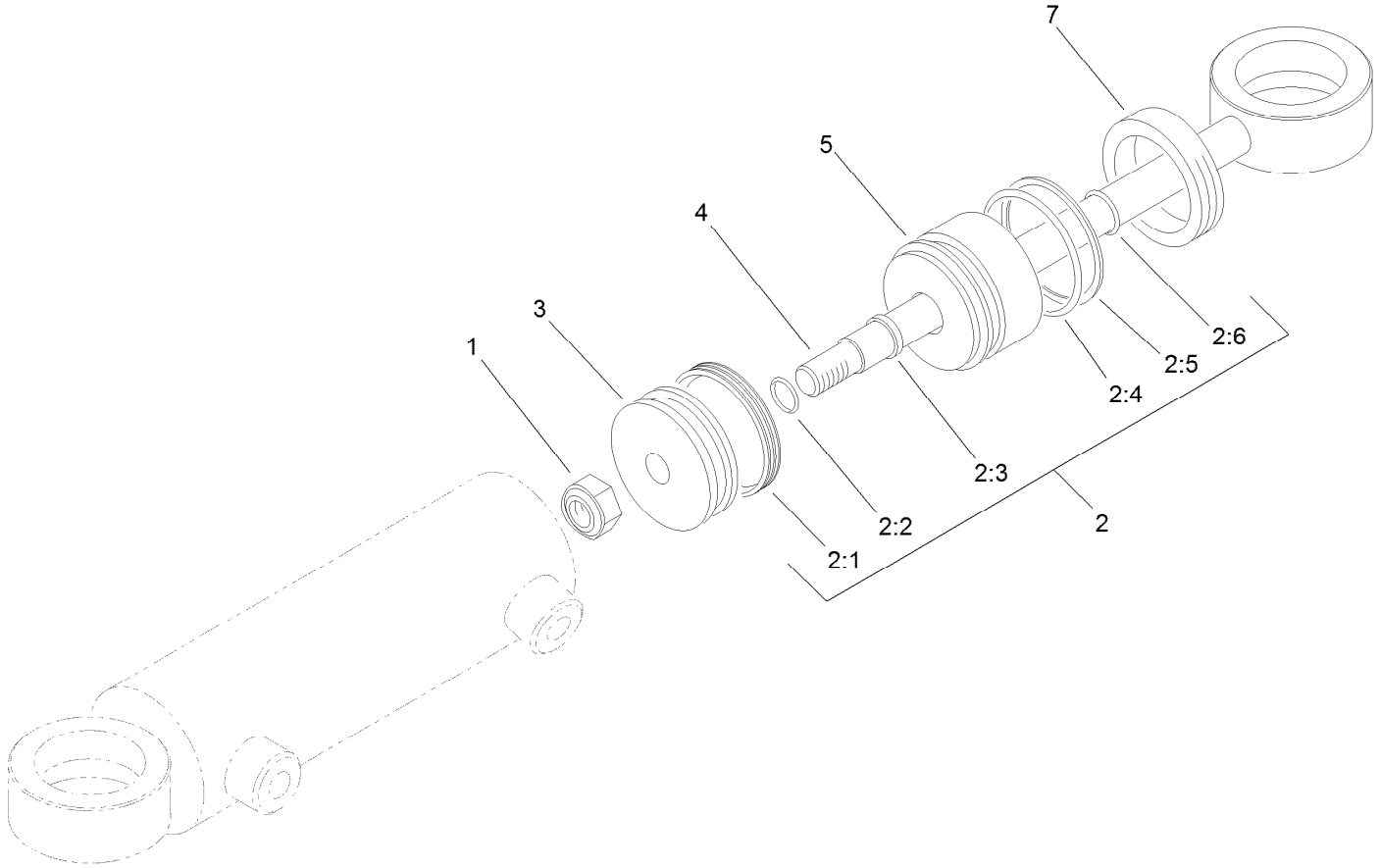

Hydraulic Cylinder Assembly No. 99-2415

Ref.	*Part Number*	*Qty.*	*Description*
1	32152-10	1	Locknut
2	86-5390	1	Seal Kit
2:1		1	Uniring ●
2:2		1	O-Ring ●
2:3		1	Seal-Rod ●
2:4		1	O-Ring ●
2:5		1	Ring-Backup ●
2:6		1	O-Ring ●
3		1	Piston ●
4		1	Rod ●
5		1	Head ●
7		1	Collar-Internal ●

● Not serviced separately

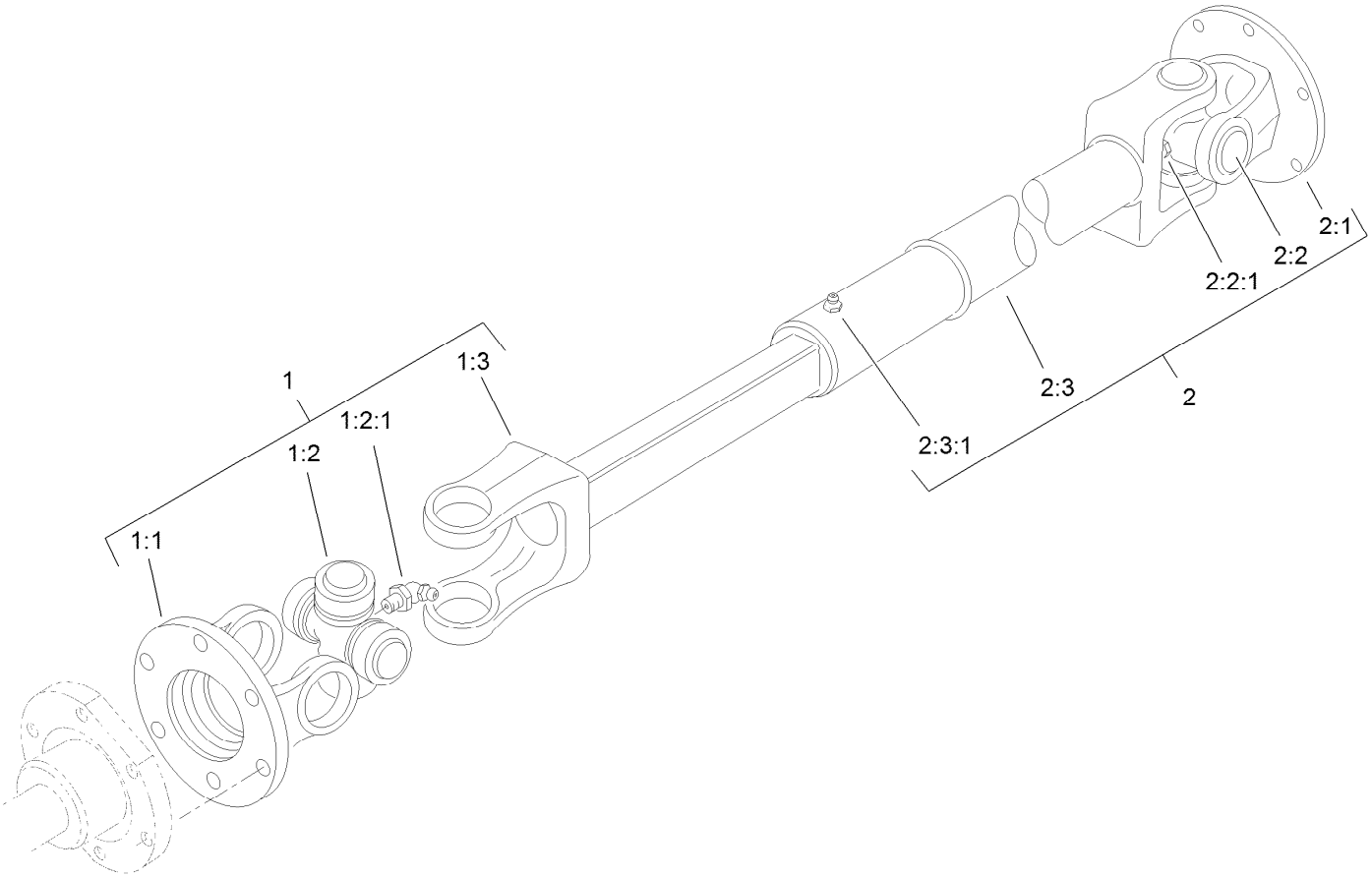

Driveshaft Assembly No. 98-5009

Ref.	*Part Number*	*Qty.*	*Description*
1	92-5096	1	Joint And Shaft ASM
1:1	72-3410	1	Yoke-Flange
1:2	54-9180	1	U-Joint Kit
1:2:1	62-3820	1	Fitting-Grease
1:3	72-3420	1	Yoke And Shaft ASM
2	98-3882	1	Joint And Tube ASM
2:1	72-3410	1	Yoke-Flange
2:2	54-9180	1	U-Joint Kit
2:2:1	62-3820	1	Fitting-Grease
2:3	72-3431	1	Yoke And Tube ASM
2:3:1	302-58	1	Fitting-Straight

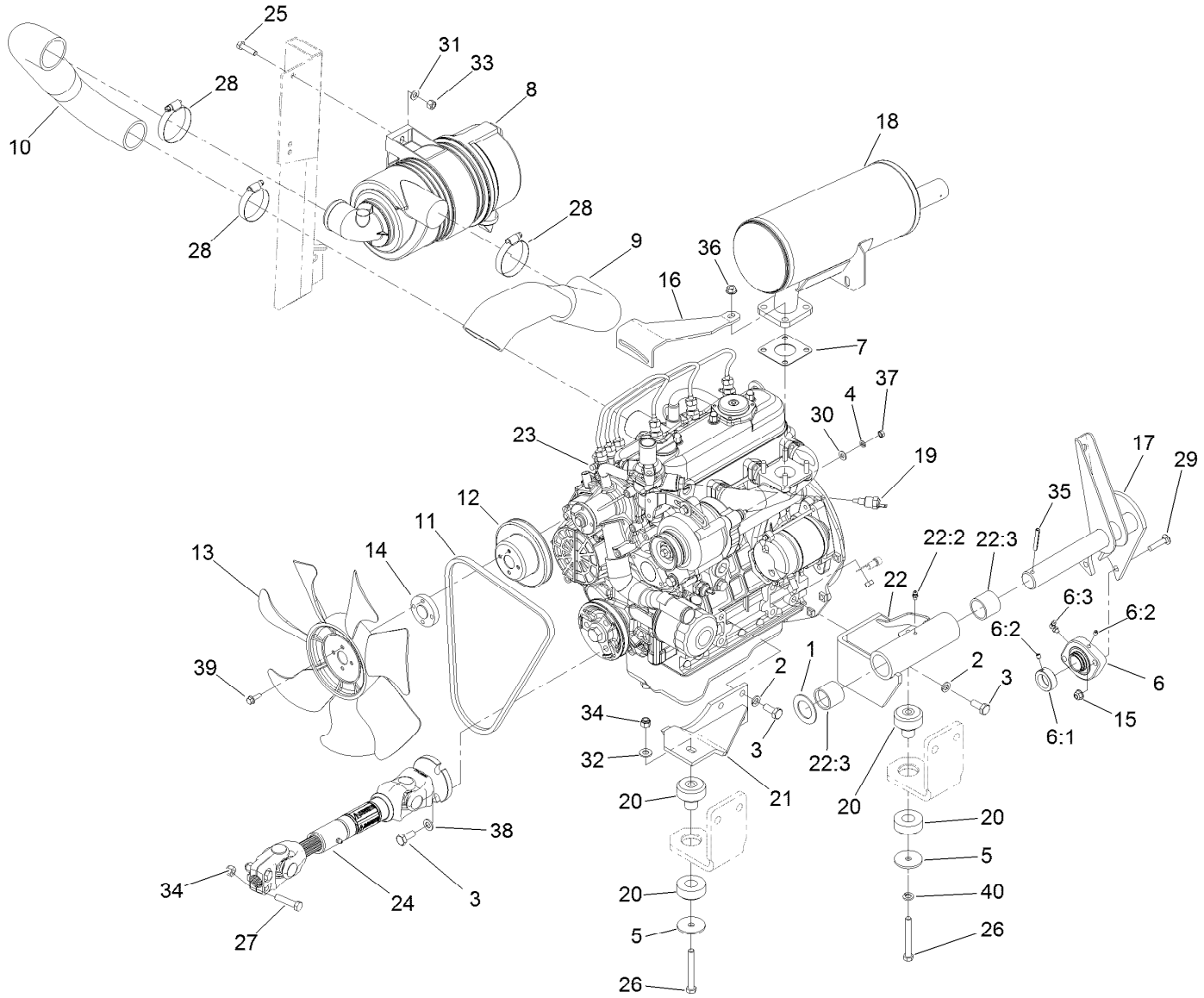

Engine, Clutch, Air Cleaner and Drive Shaft Assembly

Ref.	Part Number	Qty.	Description
1	3-4324	1	Washer-Flat
2	42-9600	8	Washer-Lock, Spring
3	43-0090	11	Screw-HH
4	43-5930	1	Washer-Lock, Spring
5	63-7400	2	Washer-Rebound
6	92-8799	1	Bearing-Flange
6:1	251-77	1	Collar-Lock, Bearing
6:2	3245-35	1	Screw-Set, HSH
6:3	302-40	1	Fitting-Grease, 90 DEG
7	98-9611	1	Gasket
8	104-3427	1	Air Cleaner ASM
9	104-3444	1	Hose-Inlet, Air
10	104-3446	1	Hose-Outlet, Air
11	104-3494	1	Belt-V
12	104-3497	1	Pulley-Fan
13	104-4246	1	Fan-Engine
14	104-4247	1	Spacer-Fan
15	104-8300	2	Nut-Flange, NI
16	105-2556-03	1	Brace-Alternator, Upper

Ref.	Part Number	Qty.	Description
17	106-4381-03	1	Shaft-Tension, PTO
18	108-1363	1	Muffler-Exhaust
19	108-8682	1	Thermoswitch
20	115-0600	2	Mount-Engine
21	117-0831-03	1	Mount-Engine, LH Front
22	117-0841	1	LH Rear Engine Mount ASM
22:2	302-5	1	Fitting-Grease
22:3	256-299	2	Bushing-Straight
23	127-9660	1	Engine-Kubota, D1105
24	131-6087	1	Driveshaft ASM
25	322-6	2	Screw-HH
26	323-14	2	Screw-HH
27	323-19	2	Screw-HH
28	2412-130	3	Clamp-Hose
29	3230-4	2	Screw-CARR
30	3256-22	1	Washer-Flat
31	3256-23	2	Washer-Flat
32	3256-24	1	Washer-Flat
33	3296-29	2	Nut-Lock, NI

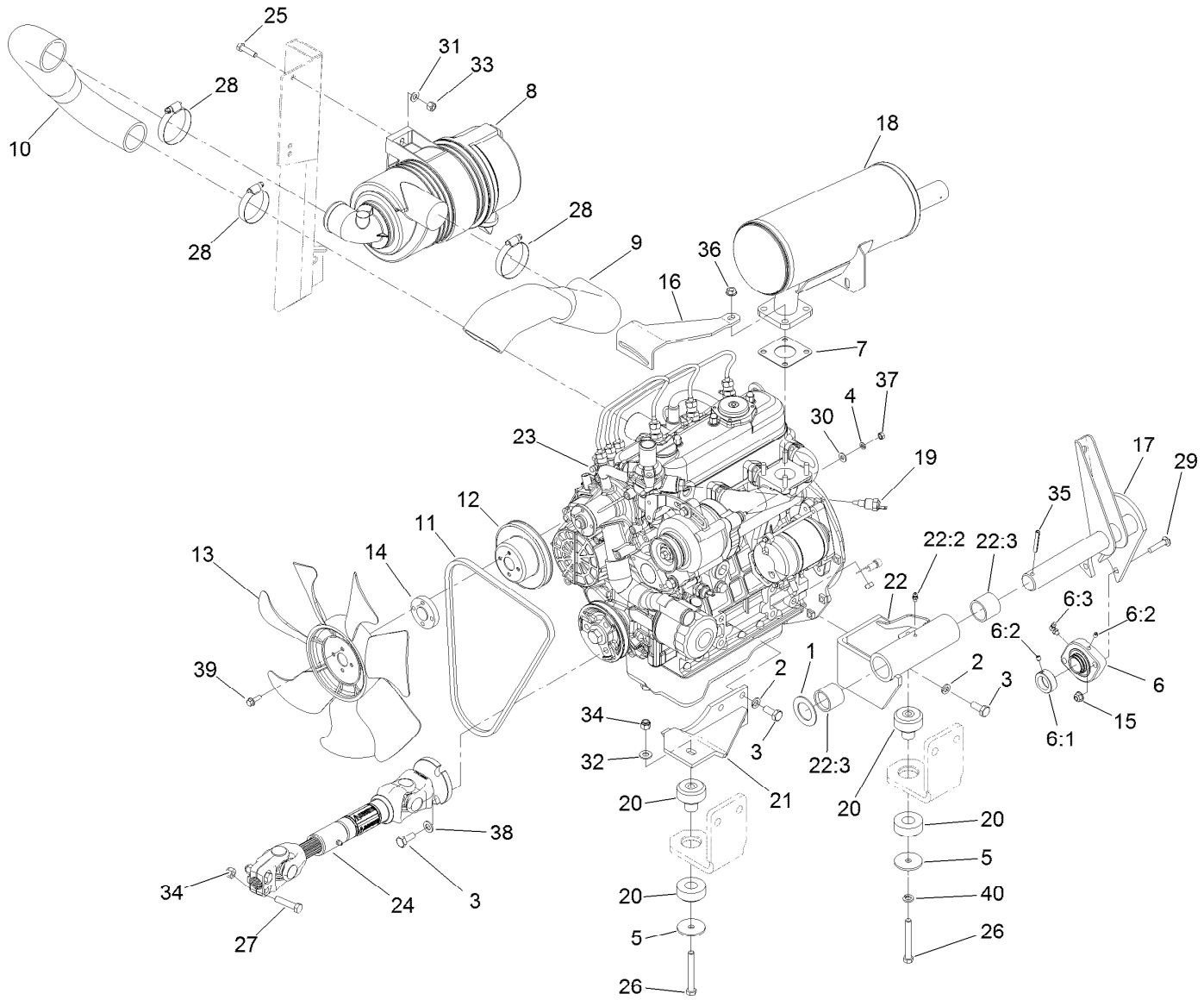

Engine, Clutch, Air Cleaner and Drive Shaft Assembly (continued)

Ref.	Part Number	Qty.	Description
34	3296-39	3	Nut-Lock, NI
35	32121-32	1	Pin-Roll
36	33004-00	4	Nut-HF
37	33013-00	1	Nut-Hex

Ref.	Part Number	Qty.	Description
38	33095-00	3	Washer-Flat
39	33103-020	4	Screw-HHF
40	3253-21	1	Washer-Lock

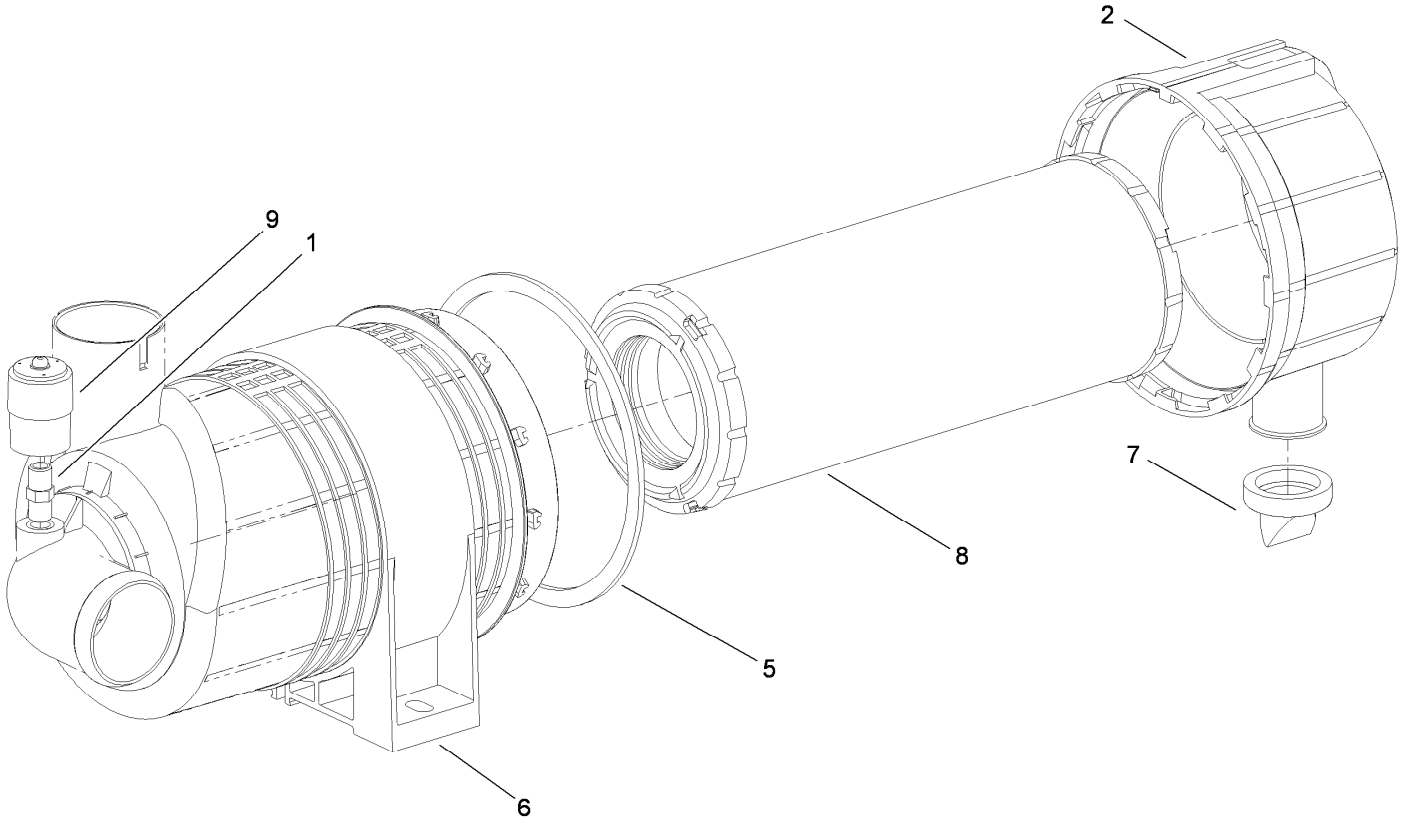

Air Cleaner Assembly No. 104-3427

Ref.	*Part Number*	*Qty.*	*Description*
1	105-4292	1	Nipple-Pipe
2	104-0497	1	Cover
5	104-4897	1	Gasket
6	98-4525	1	Bracket-Cleaner, Air
7	104-0498	1	Valve-Vacuator
8	108-3810	1	Filter-Air
9	93-9164	1	Indicator-Mini

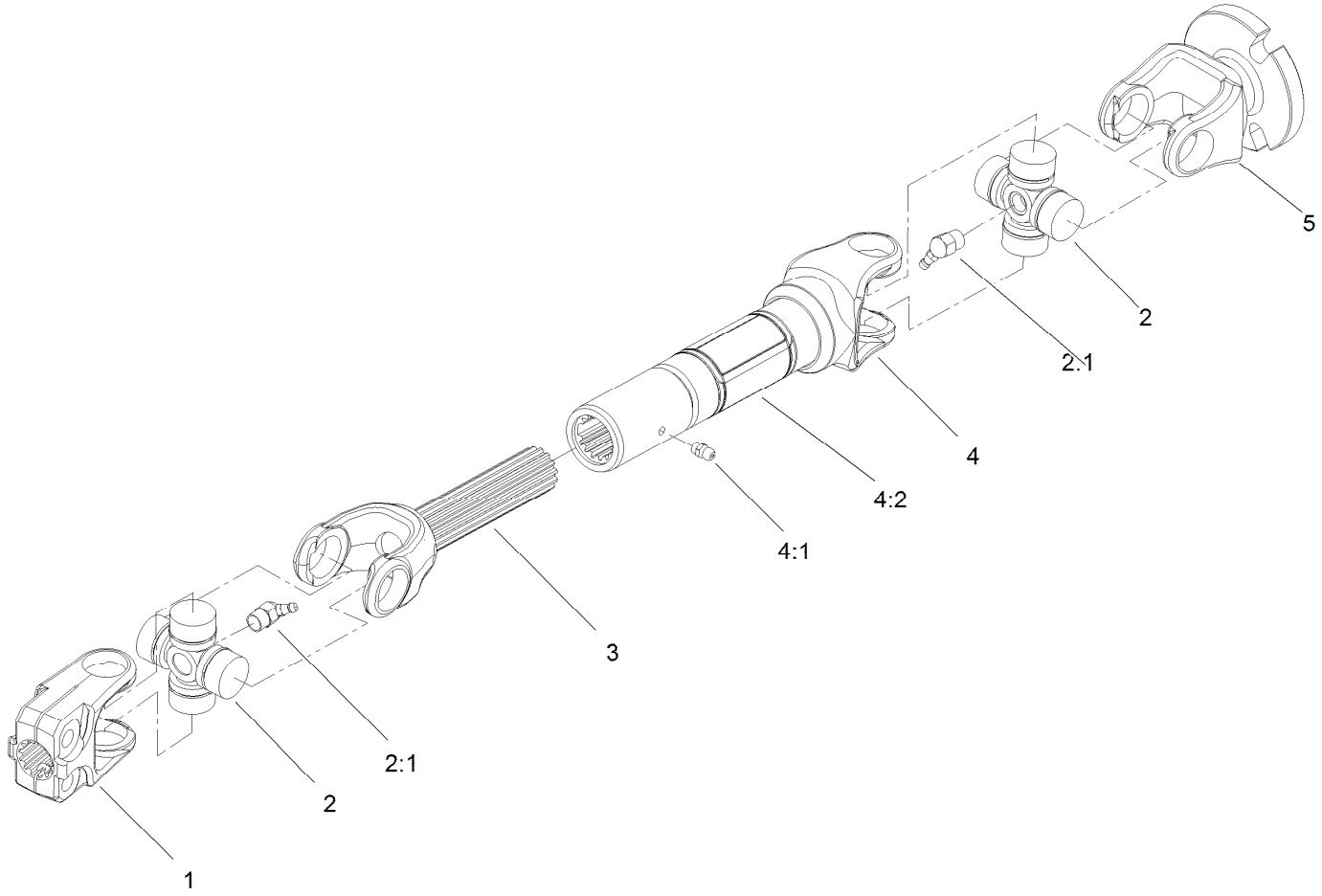

Driveshaft Assembly No. 131-6087

Ref.	*Part Number*	*Qty.*	*Description*
1	132-7201	1	Yoke-Splined
2	112-1687	2	Cross And Bearing Kit
2:1	62-3820	1	Fitting-Grease
3	98-9765	1	Yoke And Shaft
4	108-6551	1	Tube-Yoke, Slip
4:1	302-58	1	Fitting-Straight
4:2	92-1582	1	Decal-Safety
5	132-7200	1	Yoke-Flanged

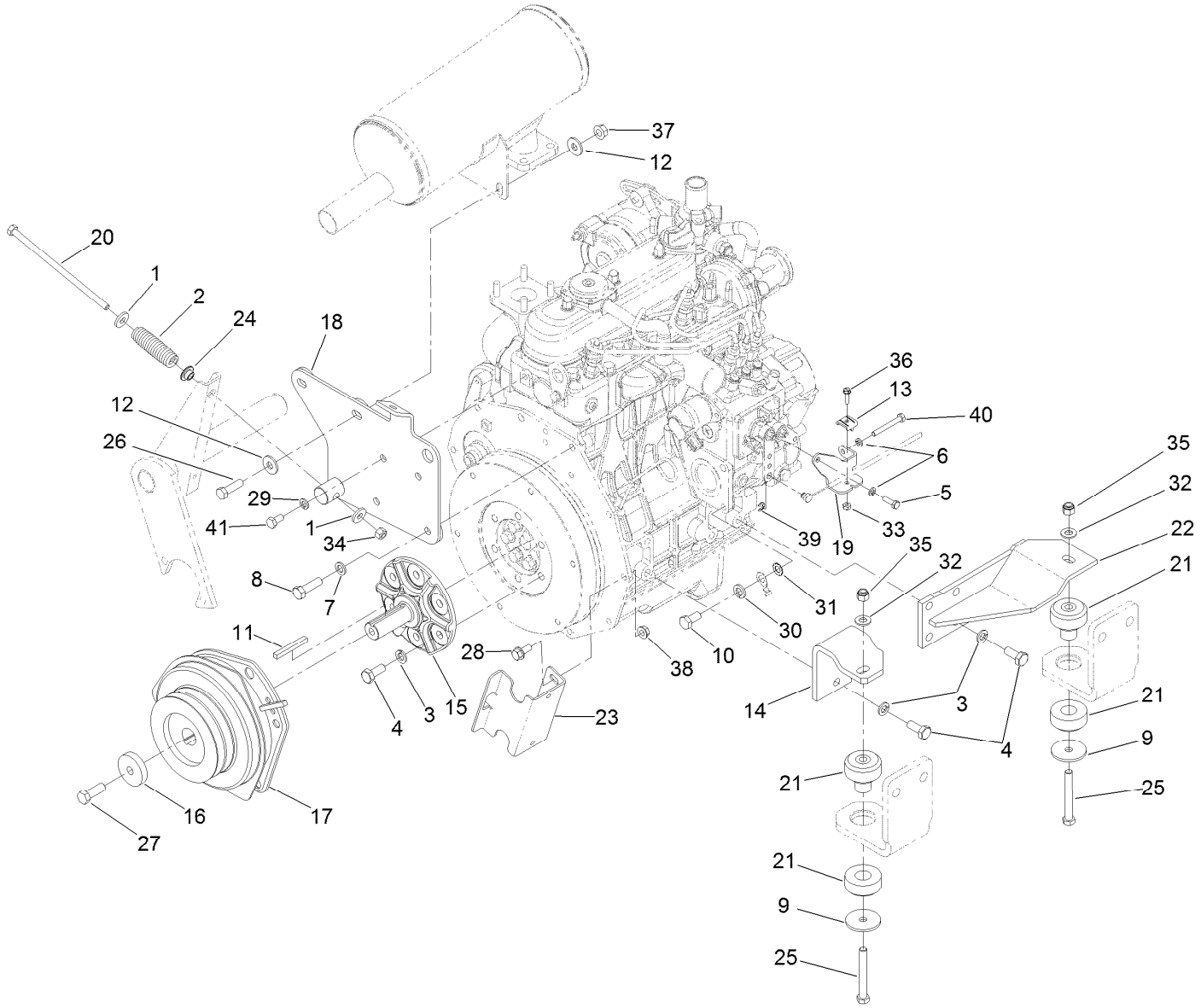

Engine Mounting and Clutch Assembly

Ref.	Part Number	Qty.	Description
1	4-2390	2	Washer-Flat
2	21-0400-01	1	Spring-Compression
3	42-9600	12	Washer-Lock, Spring
4	43-0090	12	Screw-HH
5	48-7630	1	Screw
6	48-8020	2	Washer-Spring
7	48-9590	2	Washer-Lock
8	56-2140	2	Screw-HH
9	63-7400	2	Washer-Rebound
10	63-7790	1	Screw-Cap
11	63-8150	1	Key-Square
12	80-6990	4	Washer-Hardened
13	81-1690	1	Clamp-Cable
14	104-1713-03	1	Mount-Engine, RH Rear
15	104-1715	1	Hub-Clutch
16	105-3698	1	Spacer
17	107-9061	1	Electric Clutch / Brake ASM
18	108-6561-03	1	Mount-Muffler
19	110-9682-03	1	Bracket-Throttle
20	110-9696	1	Bolt-HH
21	115-0600	2	Mount-Engine

Ref.	Part Number	Qty.	Description
22	117-0836-03	1	Mount-Engine, RH Front
23	120-6568-03	1	Stop-Clutch
24	125-9249	1	Spacer-Coupler, Rubber
25	323-14	2	Screw-HH
26	323-44	2	Screw-HH
27	3212-5	1	Screw-HH
28	3234-5	2	Screw-HHF
29	3253-4	2	Washer-Lock
30	3253-6	1	Washer-Lock
31	3255-9	1	Washer-Lock
32	3256-24	2	Washer-Flat
33	3296-2	1	Nut-Lock, NI
34	3296-29	1	Nut-Lock, NI
35	3296-39	2	Nut-Lock, NI
36	32105-13	1	Screw-HWH
37	32128-21	2	Nut-HF
38	32128-25	2	Nut-HF
39	701197	1	E-Ring
40	33113-050	1	Screw-HH
41	33114-016	2	Screw-HH

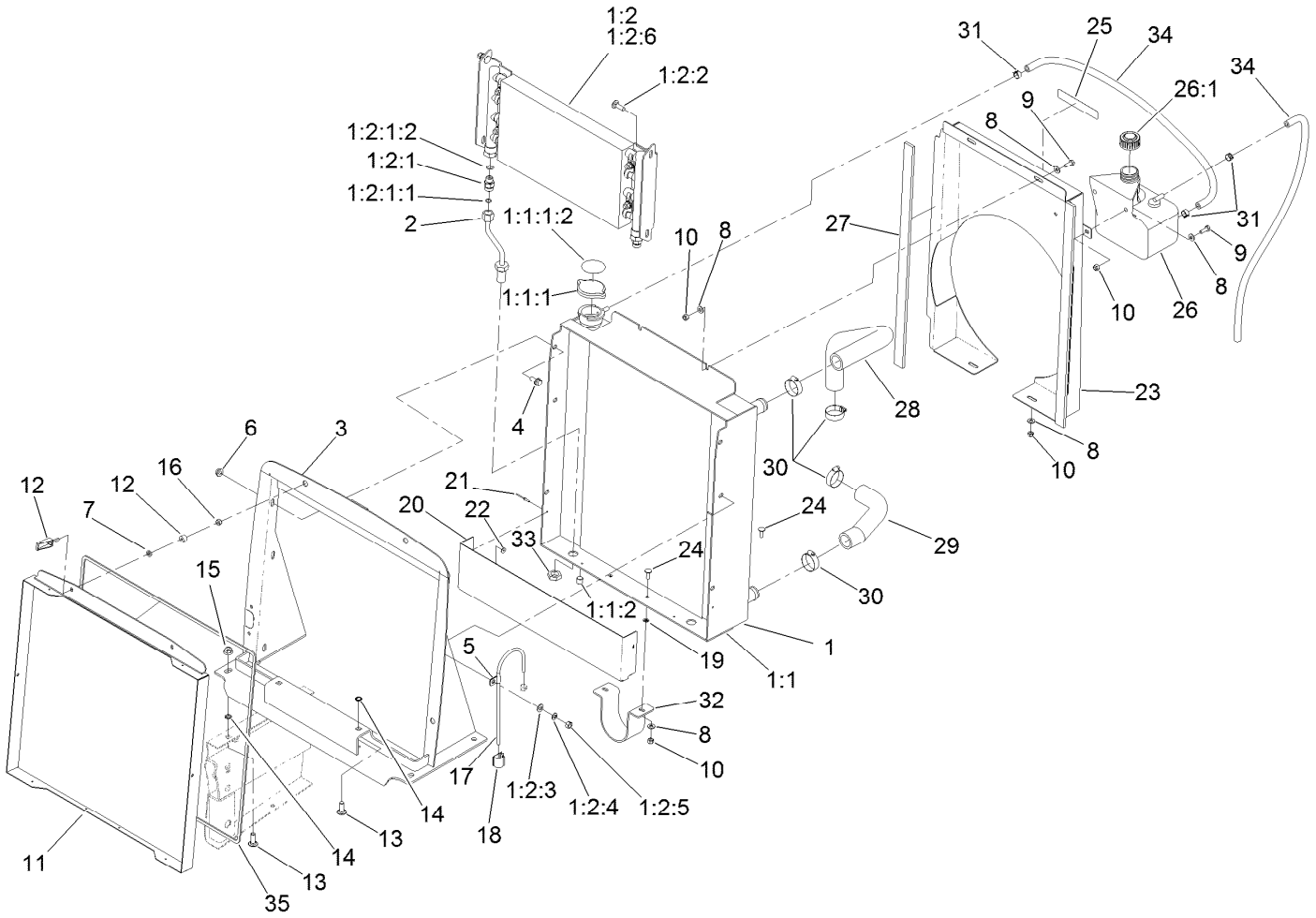

Radiator and Cooler Assembly

Ref.	Part Number	Qty.	Description
1	133-6363	1	Cooler Assembly
1:1	132-7228	1	Radiator
1:1:1	127-4877	1	Radiator Cap ASM
1:1:1:2	106-5976	1	Decal-Warning
1:1:2	99-8551	1	Plug-Pipe
1:2	119-4846	1	Oil Cooler ASM
1:2:1	340-2	2	Fitting-HYD, Straight
1:2:1:1	237-22	1	O-Ring
1:2:1:2	237-42	1	O-Ring
1:2:2	3230-2	2	Bolt-CARR
1:2:3	3256-23	6	Washer-Flat
1:2:4	3253-4	6	Washer-Lock
1:2:5	3217-6	6	Nut-Hex
1:2:6		1	Cooler ●
2	132-7297	2	Tube-HYD, Jump
3	133-6384-03	1	Frame-Radiator
4	3234-5	4	Screw-HHF
5	2412-103	1	Clamp

Ref.	Part Number	Qty.	Description
6	32128-20	4	Nut-HF
7	55-9620	2	Spacer-Plate, Pivot
8	3256-22	10	Washer-Flat
9	321-4	4	Screw-HH
10	3296-42	8	Nut-Lock, NI
11	132-7233-03	1	Screen
12	74-5950	2	Latch-Swell
13	3231-22	6	Screw-CARR
14	32151-72	6	Ring-Retaining
15	104-8301	4	Nut-Flange, NI
16	1-804254	2	Nut-Lock, HH
17	66-3180	1	Tube-Vent
18	105-7188	1	Clamp-Adhesive
19	106-8737	2	Nut-Retainer
20	132-7224-03	1	Sheild-Radiator, Bottom
21	3269-17	4	Rivet-Pop
22	3269-10	2	Washer-Back
23	132-7230-03	1	Shroud-Fan

● Not serviced separately

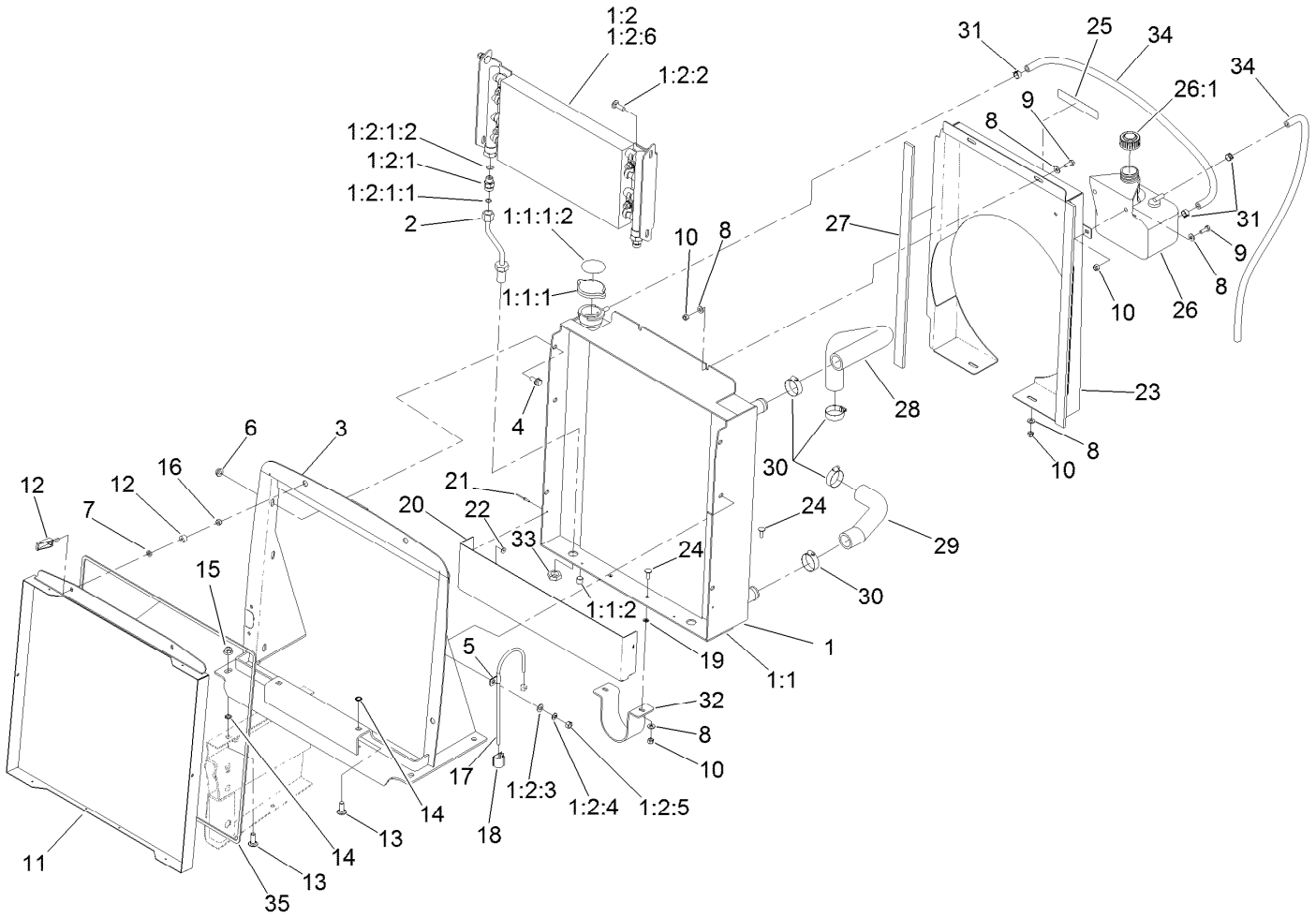

Radiator and Cooler Assembly (continued)

Ref.	Part Number	Qty.	Description
24	1-807512	4	Bolt-CARR
25	93-7272	1	Decal-Warning
26	120-5572	1	Coolant Reservoir ASM
26:1	93-5960	1	Cap-Reservoir
27	108-9683	2	Strip-Foam
28	104-3443	1	Hose-Radiator, Upper
29	104-3442	1	Hose-Radiator, Lower

Ref.	Part Number	Qty.	Description
30	2412-34	4	Clamp-Hose
31	92-2379	3	Clamp-Hose
32	132-7225-03	1	Loop-Driveshaft
33	340-70	2	Nut-Lock
34	109-0308	2	Hose-Fuel
35	133-6383	1	Foam-Seal, Radiator Screen

● Not serviced separately

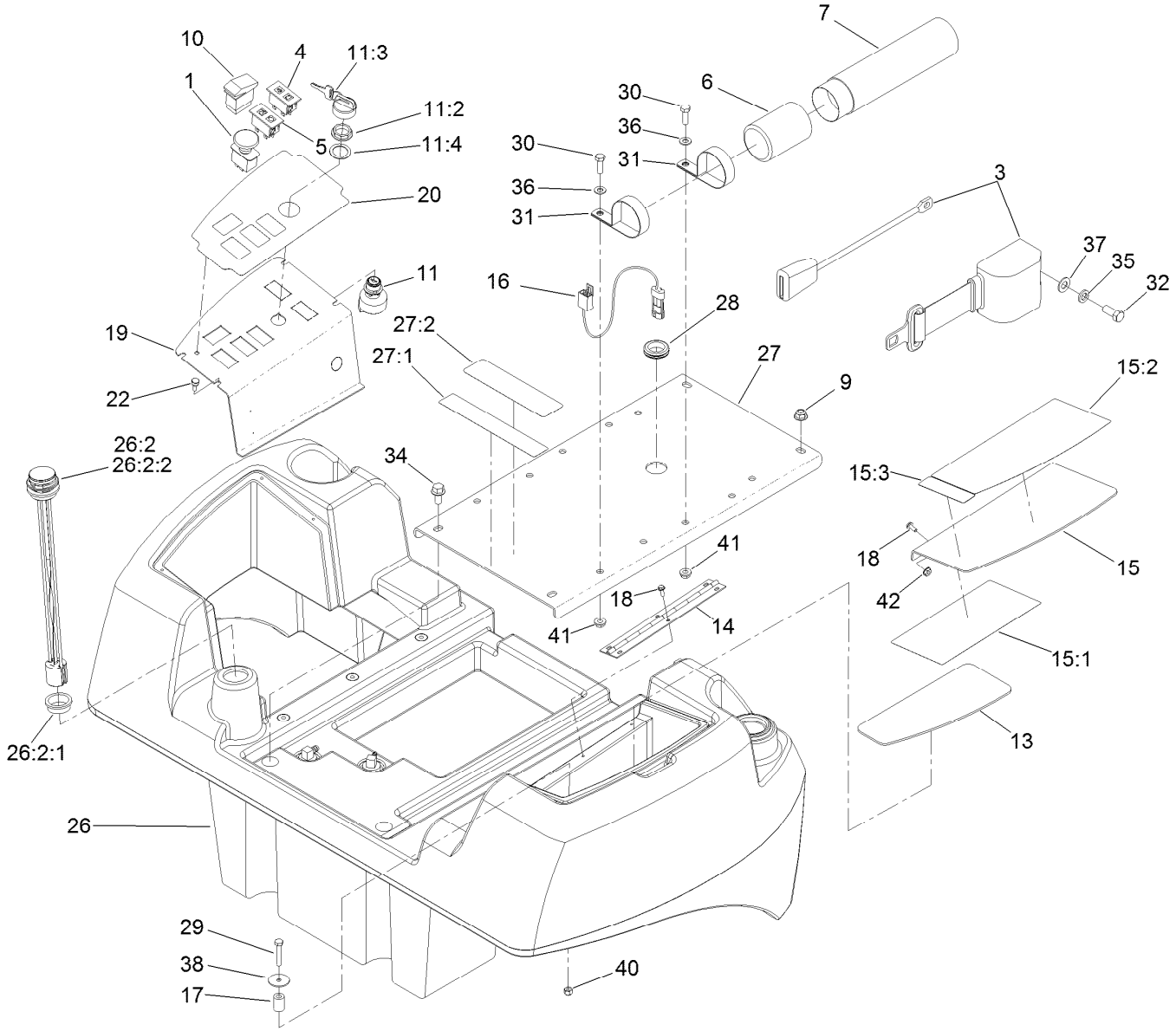

Fuel Tank and Control Panel Assembly

Ref.	Part Number	Qty.	Description
1	93-9999	1	Switch-PTO,On-On-None
3	100-4928	1	Belt-Seat
4	100-8070	1	Lamp-Warning
5	100-8071	1	Lamp-Warning
6	104-7048	1	Cap-Housing
7	104-7050	1	Tube-Manual
9	104-8301	2	Nut-Flange, NI
10	105-4320	1	Switch
11	106-5269	1	Ignition Switch ASM
11:2	108-8660	1	Nut-Mounting
11:3	106-5270	1	Ignition Key Set
11:4	108-8659	1	Washer-Backup
13	108-2013	1	Pad-Rubber
14	108-2024	1	Hinge
15	133-6378	1	Cover ASM-Gm3280
15:1	133-6377	1	Decal-Service
15:2	133-6375	1	Decal-Warning
15:3	117-2718	1	Decal-Arrester, Spark
16	108-8657	1	Harness-Wire, Seat
17	108-9688	1	Spacer
18	112-6349	6	Screw-HWH

Ref.	Part Number	Qty.	Description
19	119-4839-03	1	Plate-Control Panel
20	119-4840	1	Decal-Panel, Control
22	120-6555	4	Screw-Thumb
26	132-7212	1	Fuel Tank ASM
26:2	132-7214	1	Gauge-Fuel
26:2:1	119-0508	1	Seal
26:2:2	132-7295	1	Dial-Gauge
27	132-7298	1	Seat Plate ASM
27:1	105-2511	1	Decal-Instructions, Starting
27:2	93-7841	1	Decal-Warning
28	240-5	1	Grommet
29	321-9	1	Screw-HH
30	322-5	2	Screw-HH
31	2412-133	2	R-Clamp
32	3212-4	2	Screw-HH
34	3234-1	2	Screw-HHF
35	3253-6	2	Washer-Lock
36	3256-23	2	Washer-Flat
37	3256-25	2	Washer-Flat
38	3256-55	1	Washer-Flat
40	3296-42	1	Nut-Lock, NI

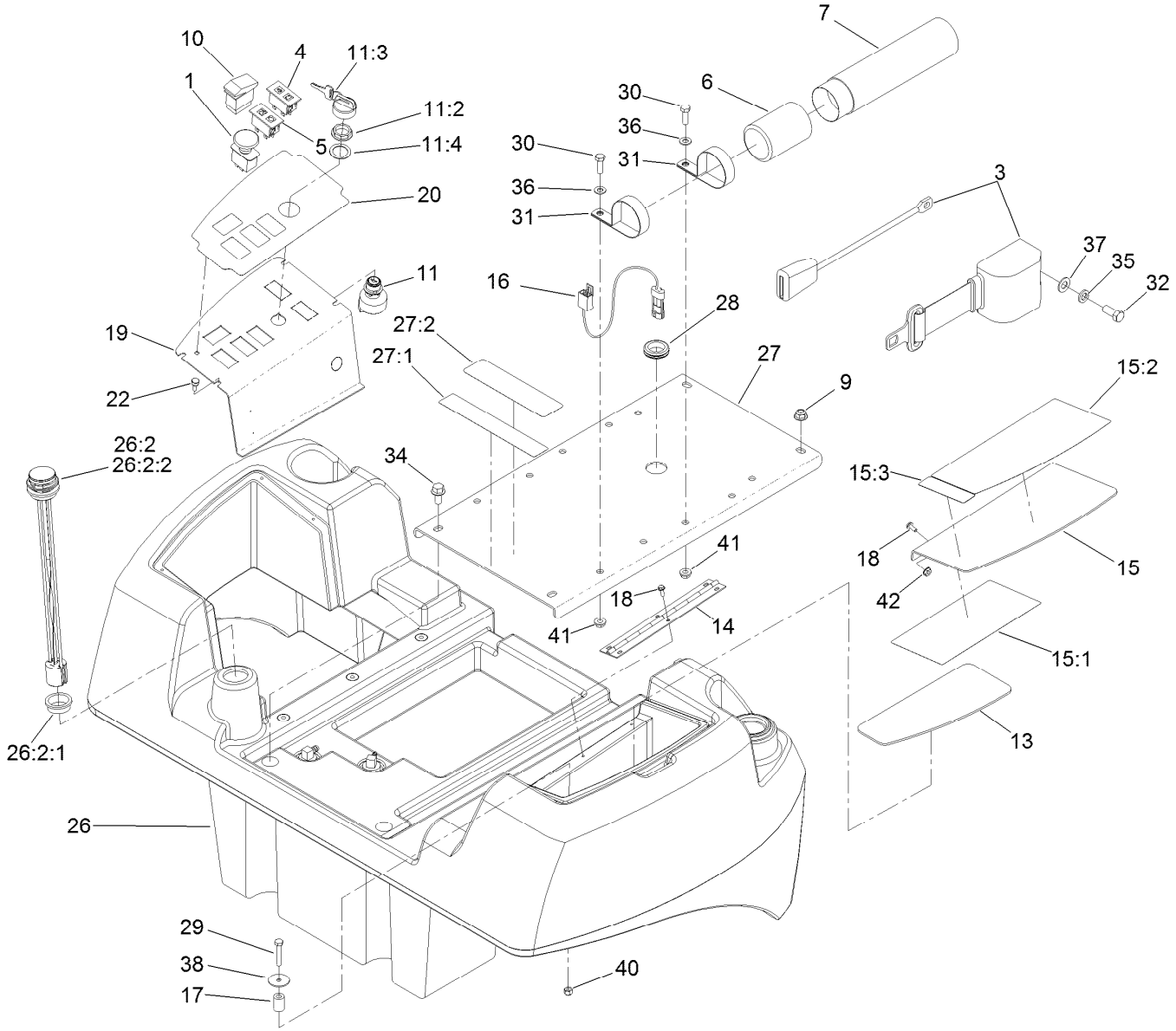

Fuel Tank and Control Panel Assembly (continued)

Ref.	*Part Number*	*Qty.*	*Description*
41	32128-20	2	Nut-HF
42	32149-8	3	Nut-Keps

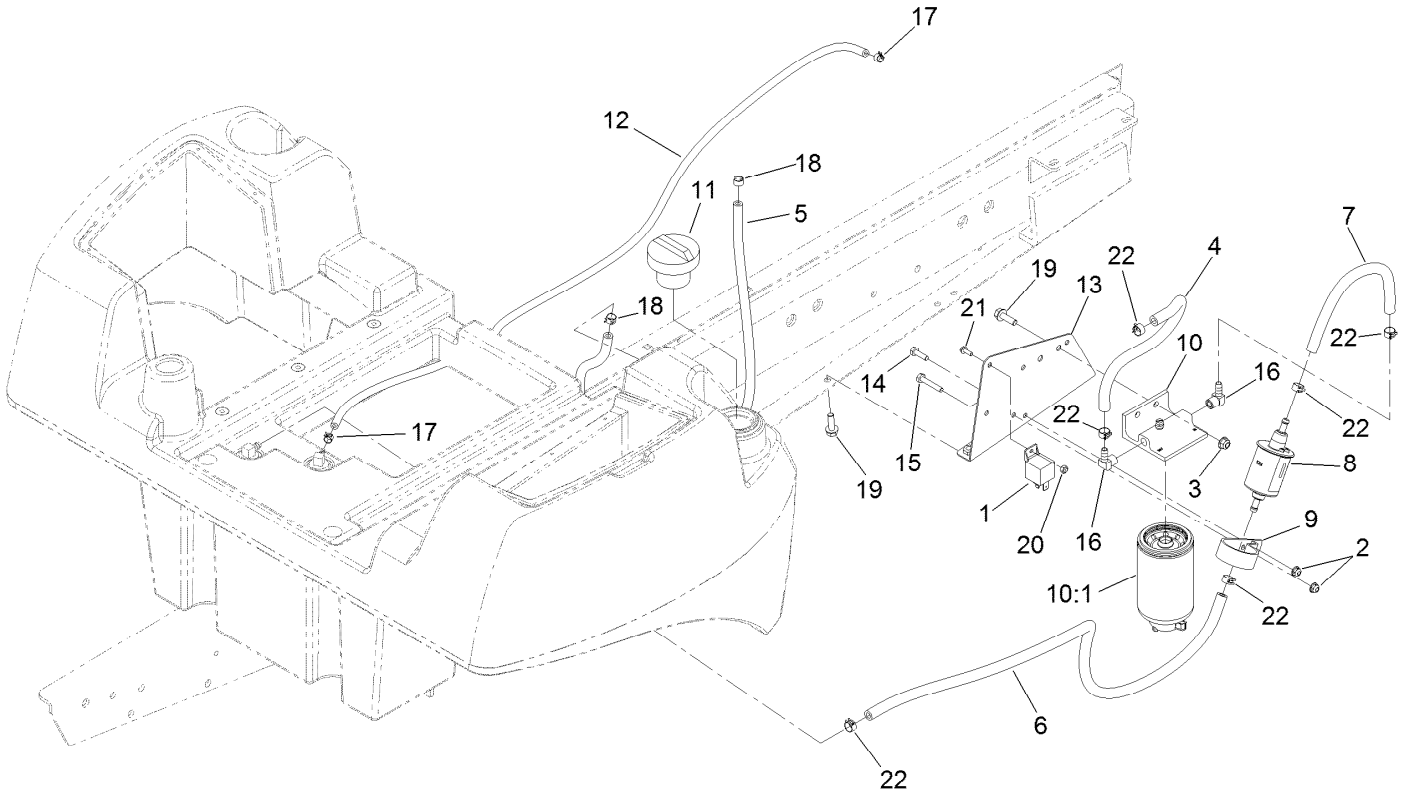

Fuel Lines and Filter Assembly

Ref.	Part Number	Qty.	Description
1	99-7435	1	Relay-Power
2	104-7201	2	Nut-Flange, NI
3	104-8300	2	Nut-Flange, NI
4	106-1126	1	Hose-Fuel
5	109-0273	1	Hose-Fuel
6	110-4007	1	Hose-Fuel
7	110-4105	1	Hose-Fuel
8	110-8806	1	Pump-Fuel
9	110-8817	1	Bracket-Pump, Fuel
10	110-9044	1	Separator-Filter
10:1	110-9049	1	Filter-Spin On
11	115-5305	1	Cap-Fuel

Ref.	Part Number	Qty.	Description
12	119-6073	1	Hose-Fuel
13	132-7231-03	1	Bracket-Support
14	321-5	1	Screw-HH
15	321-9	1	Screw-HH
16	353-781	2	Fitting-Elbow
17	2412-80	2	Clamp-Hose
18	2412-98	2	Clamp-Hose
19	3234-17	4	Screw-HHF
20	3296-2	1	Nut-Lock, NI
21	32105-23	1	Screw
22	92-2379	6	Clamp-Hose

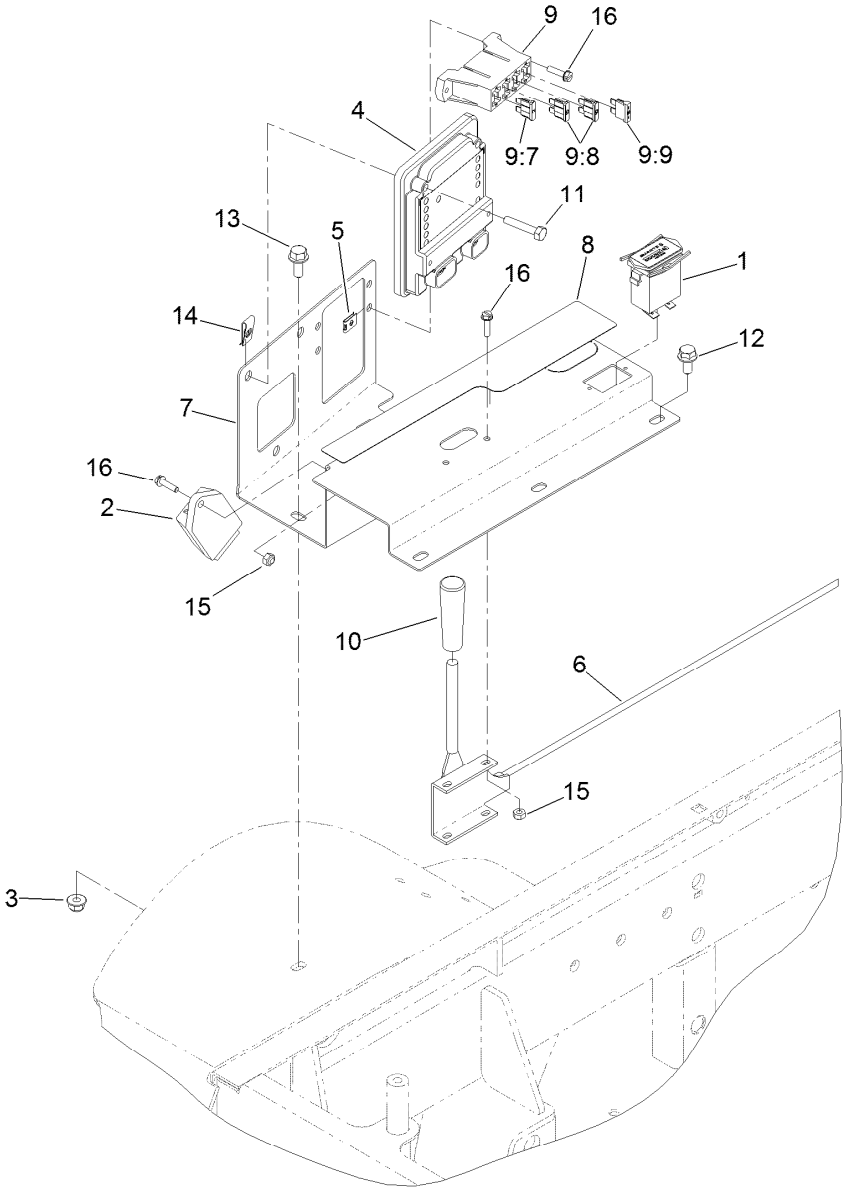

Throttle Control Assembly

Ref.	Part Number	Qty.	Description
1	1-513374	1	Meter-Hour
2	98-7611	1	Controller-Glow
3	104-8300	1	Nut-Flange, NI
4	106-9277	1	Module-Control, Standard
5	107-1013	2	Nut-Speed, U-Type
6	117-0824	1	Control-Throttle, Diesel
7	119-4831-03	1	Console
8	119-4832	1	Decal-Panel, Lower
9	122-0703	1	Harness-Wire, Main
9:7	94-6710	1	Fuse-2 Amp
9:8	218-578	2	Fuse-Blade, 10 Amp
9:9	109355	1	Fuse-Blade, 15 Amp
10	233-39	1	Knob-Control
11	321-13	3	Screw-HH
12	3234-14	3	Screw-HHF
13	3234-5	1	Screw-HHF
14	3290-199	3	Nut-Speed
15	3296-2	3	Nut-Lock, NI
16	32105-13	5	Screw-HWH

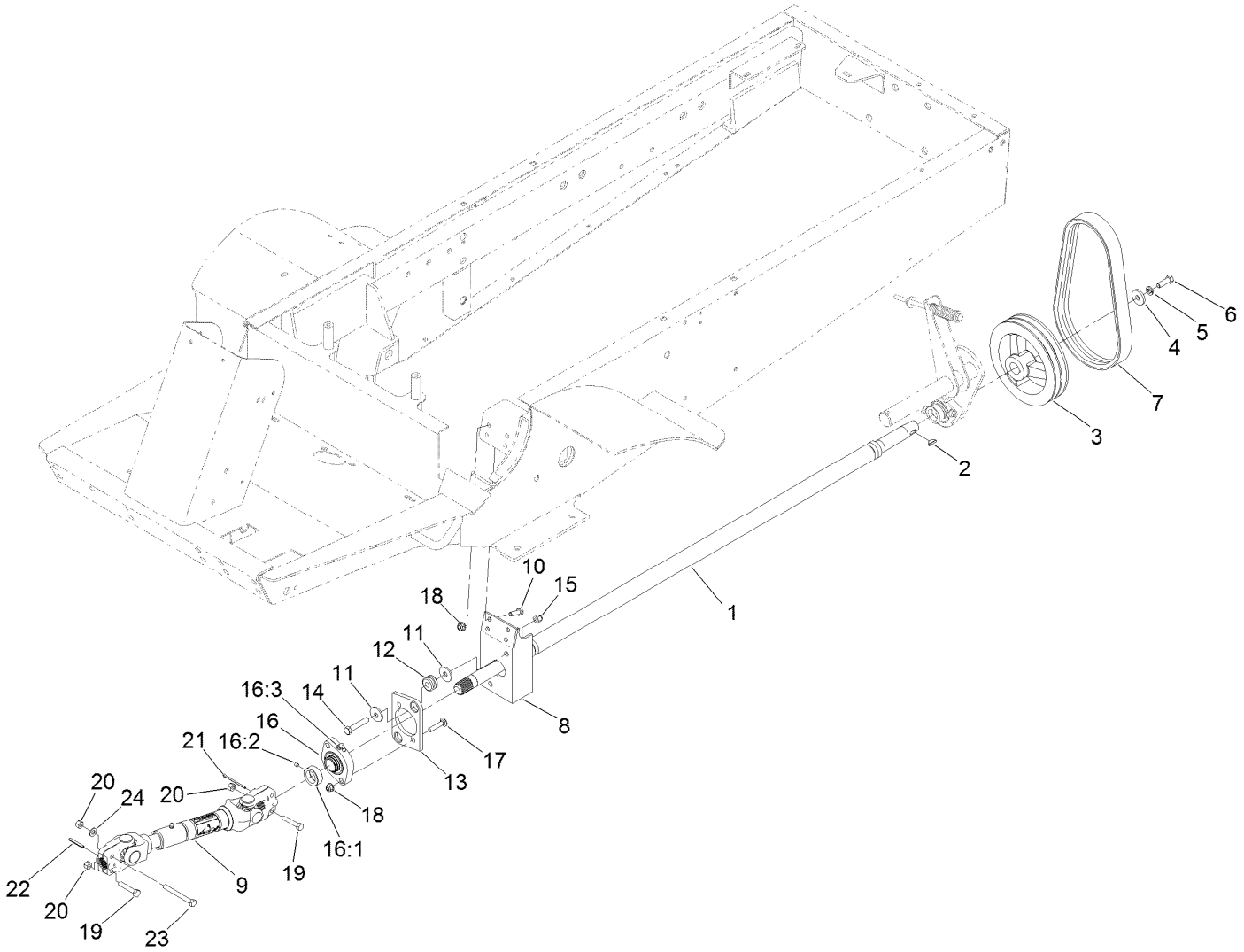

PTO Drive Assembly

Ref.	Part Number	Qty.	Description
1	92-8855-03	1	Shaft-PTO
2	3257-5	1	Key-Woodruff
3	43-5320-03	1	Pulley-PTO
4	29-4730	1	Washer-Flat
5	3253-21	1	Washer-Lock
6	323-18	1	Screw-HH
7	63-6240	1	V-Belt
8	132-7260-03	1	Mount-Bearing, PTO
9	108-1366	1	PTO Drive Shaft ASM
10	322-5	4	Screw-HH
11	63-8410	4	Washer
12	63-9750	2	Mount
13	84-7580	1	Plate-Support, Bushing
14	323-10	2	Screw-HH
15	3296-39	2	Nut-Lock, NI
16	92-8799	1	Bearing-Flange
16:1	251-77	1	Collar-Lock, Bearing
16:2	3245-35	1	Screw-Set, HSH
16:3	302-40	1	Fitting-Grease, 90 DEG
17	3230-4	2	Screw-CARR
18	104-8300	6	Nut-Flange, NI
19	322-9	4	Screw-HH
20	3296-29	5	Nut-Lock, NI
21	3272-15	1	Pin-Cotter
22	32121-34	1	Pin-Roll
23	322-14	1	Screw-HH
24	3256-23	1	Washer-Flat

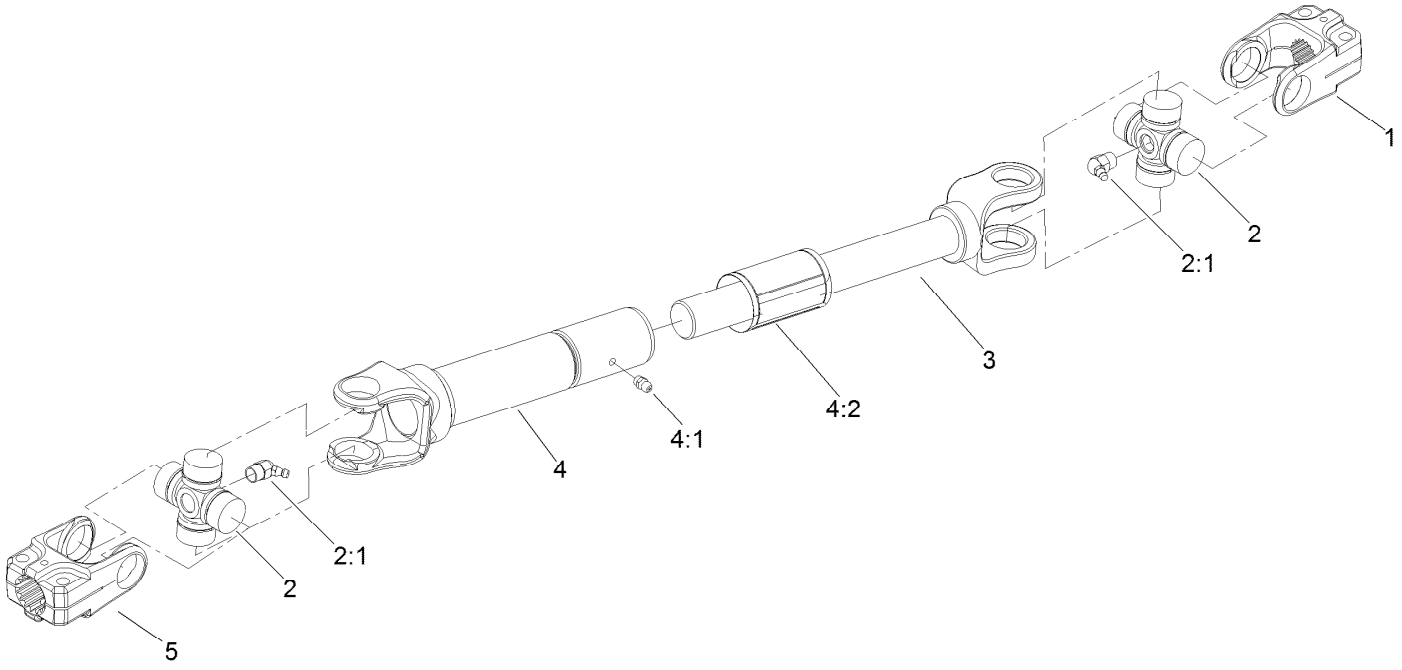

PTO Driveshaft Assembly No. 108-1366

Ref.	*Part Number*	*Qty.*	*Description*
1	54-9040	1	Yoke-End
2	54-9180	2	U-Joint Kit
2:1	62-3820	1	Fitting-Grease
3	108-6550	1	Shaft-Yoke, Slip
4	108-6551	1	Tube-Yoke, Slip
4:1	302-58	1	Fitting-Straight
4:2	92-1582	1	Decal-Safety
5	54-9090	1	Yoke-End

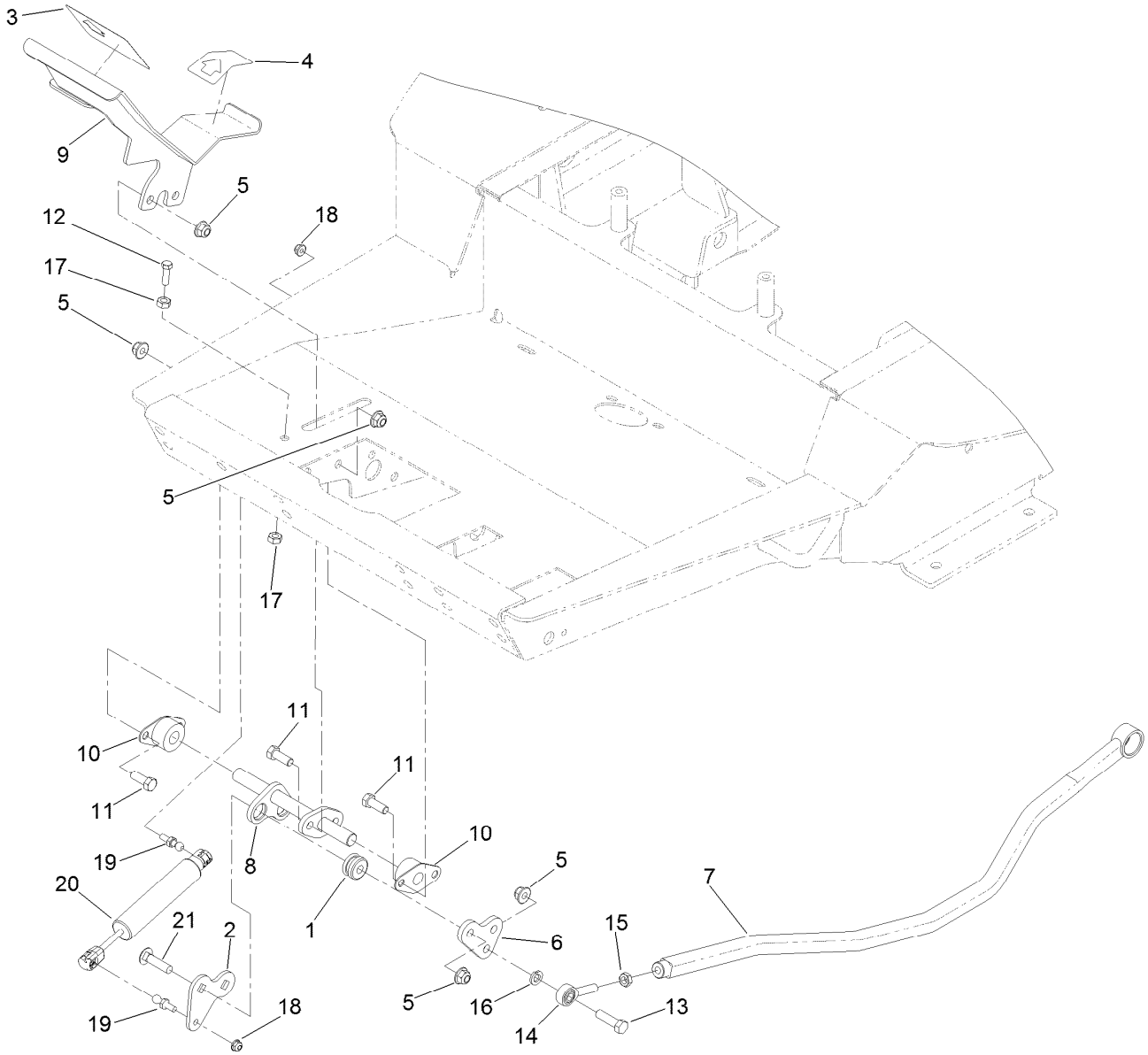

Traction Pedal Assembly

Ref.	Part Number	Qty.	Description
1	63-9750	2	Mount
2	133-6364	1	Plate-Damper
3	94-3307	1	Pad-Pedal, Traction
4	94-3308	1	Pad-Pedal, Traction
5	104-8301	9	Nut-Flange, NI
6	125-4401	1	Plate-Linkage, Traction
7	132-7236-03	1	Rod-Traction
8	132-7288	1	Pivot-Traction Pedal
9	132-7290-03	1	Pedal-Traction
10	256-236	2	Bearing-Mount, Flange
11	323-6	6	Screw-HH

Ref.	Part Number	Qty.	Description
12	323-7	1	Screw-HH
13	323-29	1	Screw-HH
14	2411-36	1	Bearing-End, Rod
15	3220-3	1	Nut-HJ
16	3253-21	1	Washer-Lock
17	3217-7	2	Nut-Hex
18	104-7201	2	Nut-Flange, NI
19	132-6917	2	Ball Stud
20	133-1171	1	Damper-Non Cavitating
21	3231-4	2	Screw-CARR

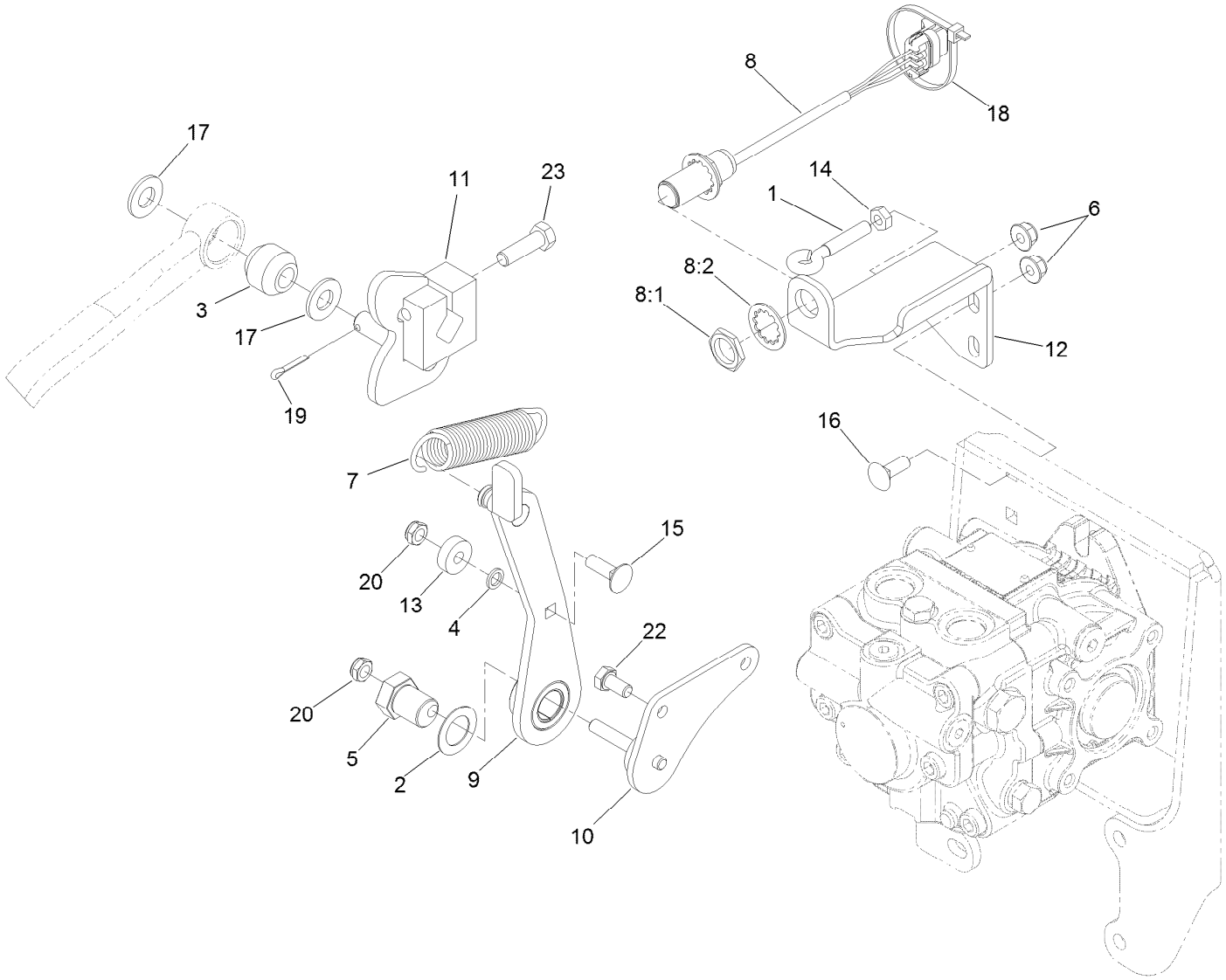

Transmission Linkage Assembly

Ref.	Part Number	Qty.	Description
1	1-303238	1	Eyebolt-Thread, RH
2	3-6498	1	Washer-Thrust
3	23-2270	1	Bushing-Rubber
4	75-5470	1	Spacer-Bearing
5	93-2111	1	Stud-Traction
6	104-8300	3	Nut-Flange, NI
7	115-4712	1	Spring-Extension
8	115-5300	1	Proximity Switch ASM
8:1	117-3207	2	Nut-Hex
8:2	117-3208	2	Washer-Lock, Internal Tooth
9	130-8730	1	Arm-Neutral
10	130-8734	1	Pivot

Ref.	Part Number	Qty.	Description
11	133-6359	1	Cam-Neutral
12	133-6393-03	1	Bracket-Sensor
13	251-259	1	Bearing-Ball
14	3218-2	1	Nut-Jam
15	3230-2	1	Bolt-CARR
16	3230-16	2	Screw-CARR
17	3256-26	2	Washer-Flat
18	3290-379	1	Tie-Cable
19	3272-10	1	Pin-Cotter
20	3296-47	2	Nut-Lock, NI
22	33114-016	2	Screw-HH
23	323-7	1	Screw-HH

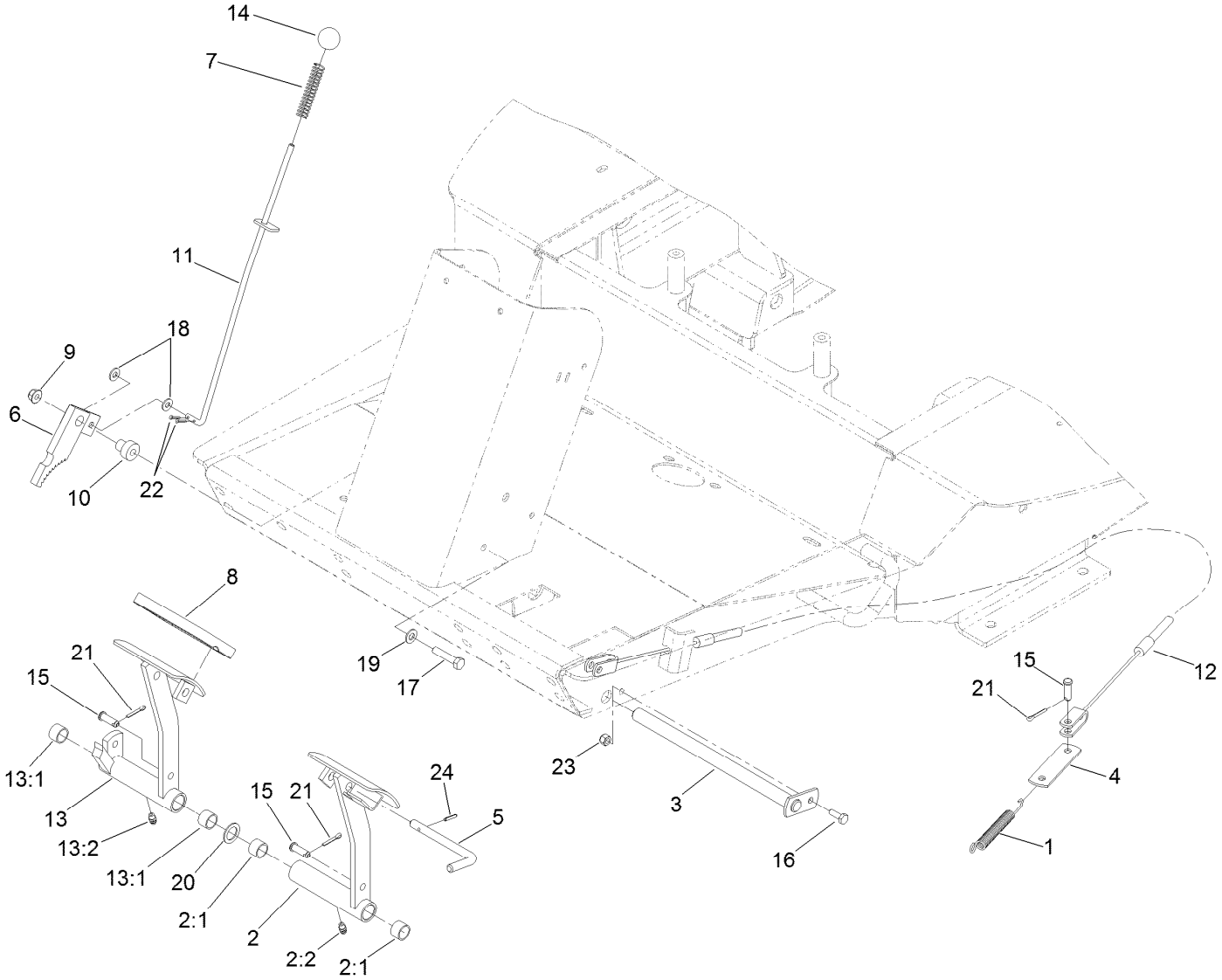

Brake Pedal and Linkage Assembly

Ref.	Part Number	Qty.	Description
1	3-7243	2	Spring-Extension
2	63-6180	1	Pedal-Brake, LH
2:1	256-42	2	Bushing
2:2	302-5	1	Fitting-Grease
3	63-6210-03	1	Pin-Brake
4	63-6750	2	Link-Cable, Brake
5	63-7880	1	Pin-Latch, Brake
6	63-7900-03	1	Rack
7	71-8310	1	Spring-Compression
8	93-8742	2	Footpad-Brake
9	104-8300	1	Nut-Flange, NI
10	105-7156	1	Spacer
11	105-7168	1	Rod ASM
12	108-6556	2	Cable-Brake

Ref.	Part Number	Qty.	Description
13	120-6597	1	RH Brake Pedal ASM
13:1	256-42	2	Bushing
13:2	302-5	1	Fitting-Grease
14	233-17	1	Knob
15	283-58	4	Pin-Clevis
16	321-4	1	Screw-HH
17	322-7	1	Screw-HH
18	3256-22	2	Washer-Flat
19	3256-23	1	Washer-Flat
20	3256-69	2	Washer-Flat
21	3272-10	4	Pin-Cotter
22	3272-5	2	Pin-Cotter
23	3296-42	1	Nut-Lock, NI
24	32121-50	1	Pin-Spring

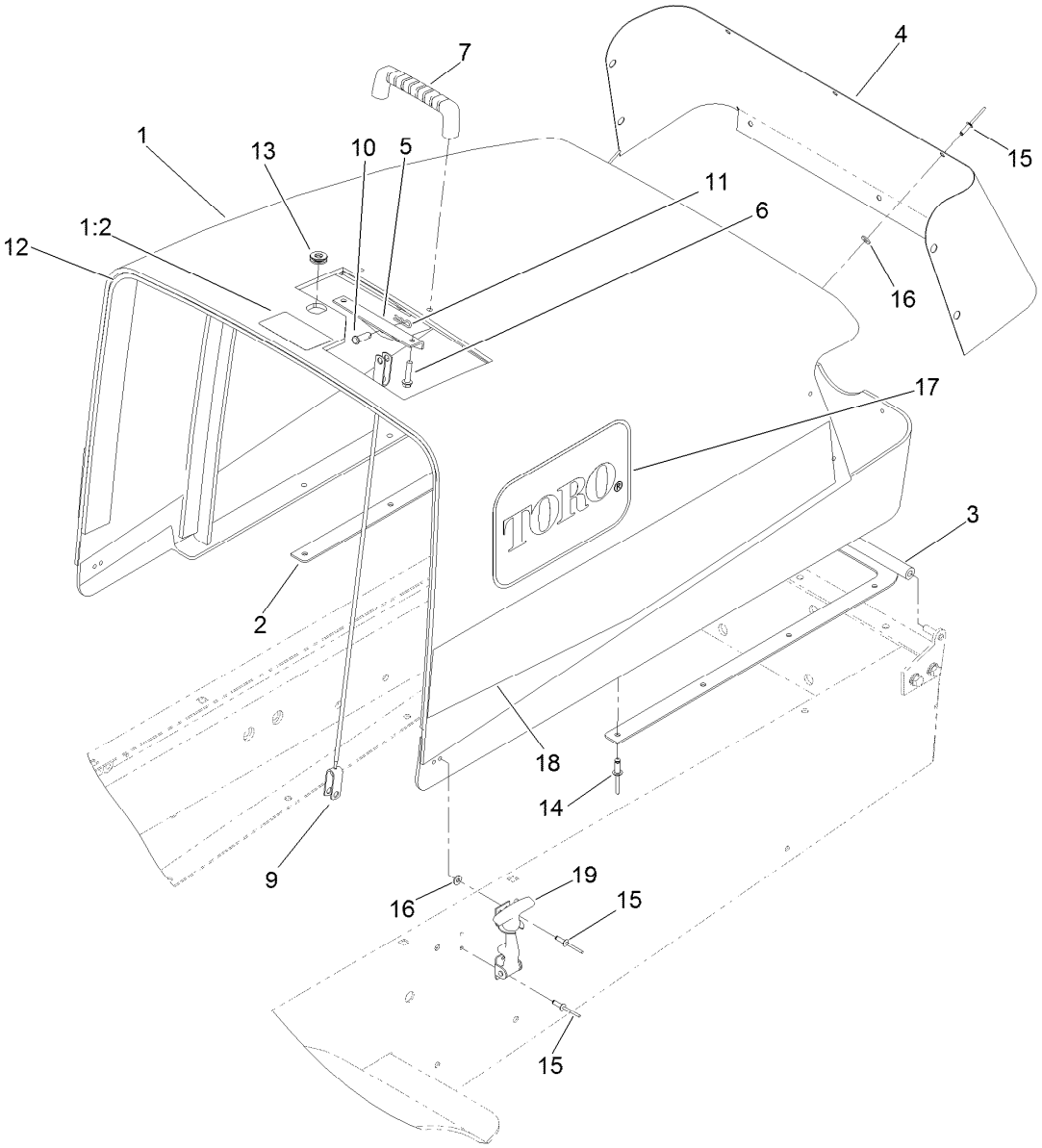

Hood Assembly

Ref.	Part Number	Qty.	Description
1	119-2195	1	Hood ASM
1:2	106-6754	1	Decal-Danger
2	105-4277-03	1	RH Hood Hinge ASM
3	105-4278-03	1	LH Hood Hinge ASM
4	105-0006-03	1	Screen-Hood
5	105-0088-03	1	Bracket-Cable, Hood
6	46-8092	2	Screw-Plastite
7	65-5100	1	Handle-Door
9	105-3650	1	Cable-Hood
10	283-58	2	Pin-Clevis

Ref.	Part Number	Qty.	Description
11	3290-307	2	Pin-Cotter
12	105-3651	1	Strip-Foam
13	104-1453	1	Grommet
14	3290-412	12	Rivet
15	3269-4	18	Rivet-Pop
16	3256-14	14	Washer-Flat
17	66-6140	2	Decal
18	108-2067	2	Decal
19	95-6339	2	Latch

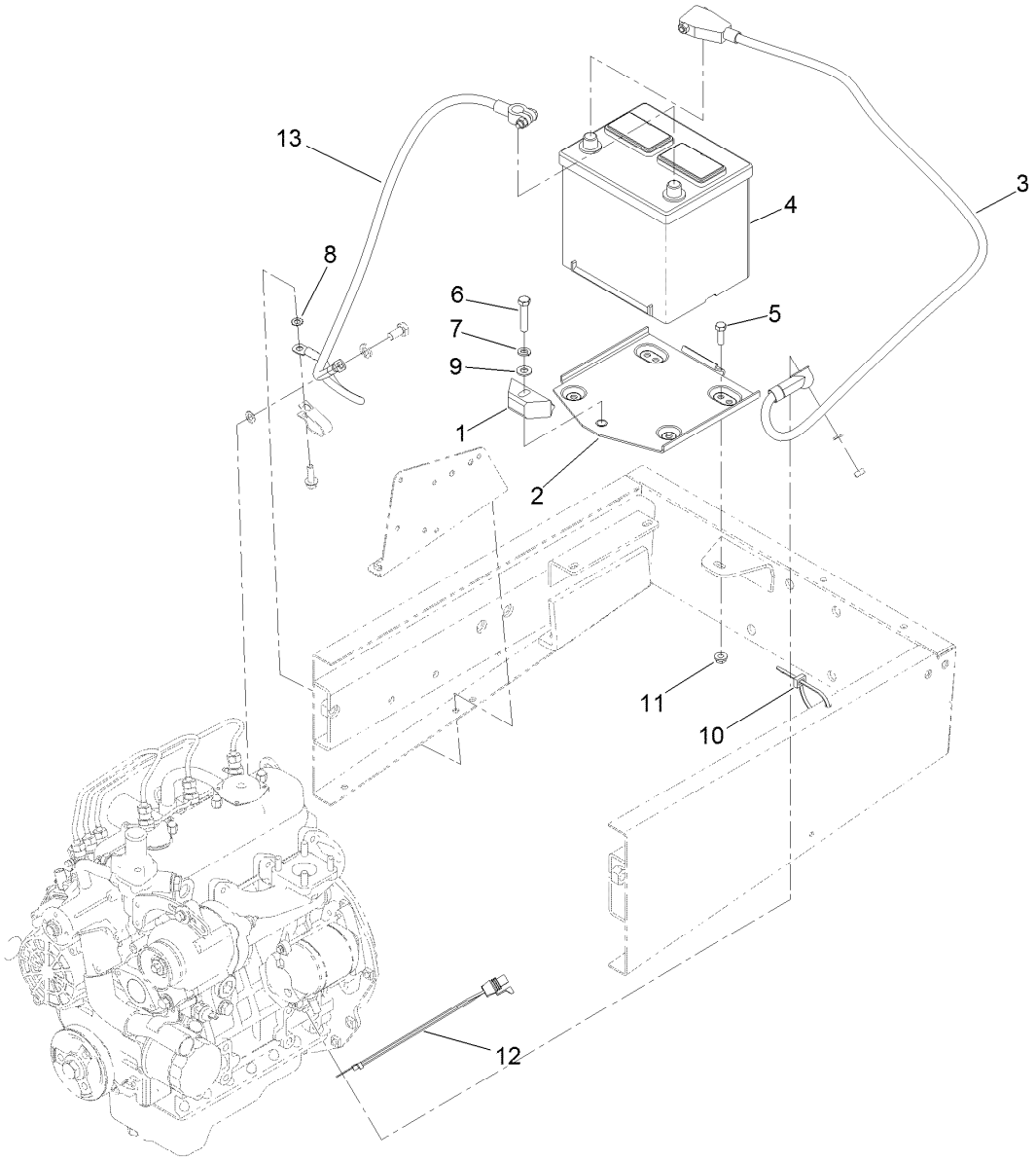

Battery Assembly

Ref.	Part Number	Qty.	Description
1	66-2490	1	Retainer-Battery
2	94-7343	1	Base-Battery
3	104-0086	1	Cable-Battery, Positive
4	106-5187	1	Battery-Dry
5	322-5	3	Screw-HH
6	323-9	1	Screw-HH
7	3253-21	1	Washer-Lock
8	3255-8	1	Washer-Lock
9	3256-24	1	Washer-Flat
10	3290-378	8	Tie-Cable
11	32128-20	3	Nut-HF
12	99-3441	1	Harness-Wire, Fusible Link
13	105-0040	1	Cable-Battery, Negative

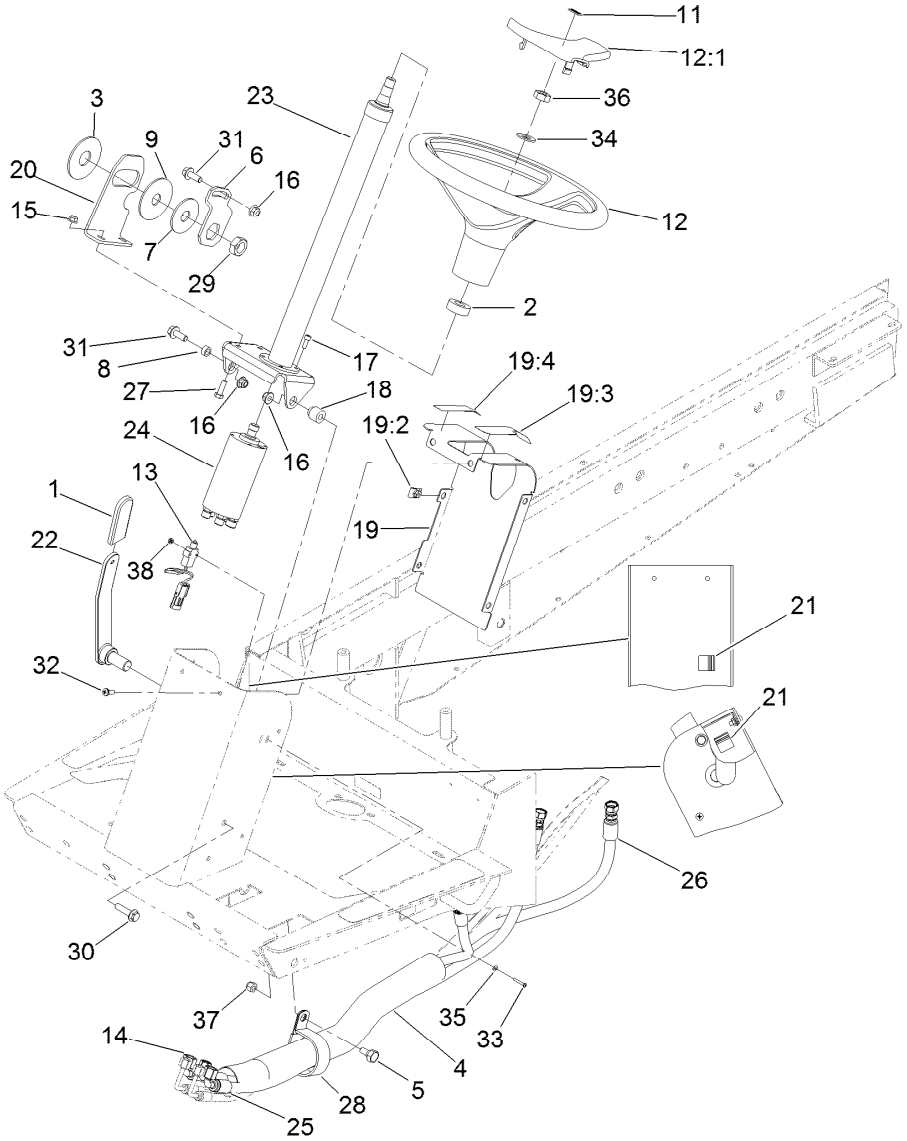

Steering Assembly

Ref.	Part Number	Qty.	Description
1	21-1880	1	Grip-Handle
2	21-9260	1	Cover-Dust
3	31-0390	1	Disc-Friction
4	44-8530	1	Protector-Sleeve
5	46-3380	1	Bolt-Shoulder
6	80-2880	1	Bracket-Tilt
7	80-2930	1	Washer-Flat
8	80-2960	1	Spacer-Tower
9	82-9010	1	Disc-Friction
11	98-1459	1	Decal
12	98-1471	1	Wheel-Steering
12:1	98-1468	1	Cover-Wheel, Steering
13	99-3410	1	Switch
14	133-6354	1	HYD Hose ASM
15	104-8300	2	Nut-Flange, NI
16	104-8301	3	Nut-Flange, NI
17	105-2409	4	Screw-HSH
18	105-7166	1	Spacer
19	105-7180	1	Tower Panel ASM
19:2	105-7170	6	Nut-Retainer
19:3	105-7179	1	Decal-Brake, Parking

Ref.	Part Number	Qty.	Description
19:4	82-8940	1	Decal-Steering, Tilt
20	105-7181-03	1	Plate-Pivot
21	105-7188	2	Clamp-Adhesive
22	108-6092	1	Lever-Steering, Tilt
23	114-2884	1	Column ASM
24	131-5624	1	Steer Valve ASM
25	132-7244	1	Hose ASM
26	132-7245	1	HYD Hose ASM
27	322-5	2	Screw-HH
28	2412-102	1	Clamp-R
29	3218-7	1	Nut-Jam
30	3234-18	1	Screw-HHF
31	3234-42	2	Screw-HHF
32	3250-32	6	Screw-PPH
33	3250-35	2	Screw-PPH
34	3256-27	1	Washer-Flat
35	3256-53	2	Washer-Flat
36	3296-33	1	Nut-Lock, NI
37	3296-39	1	Nut-Lock, NI
38	32149-6	2	Nut-Keps

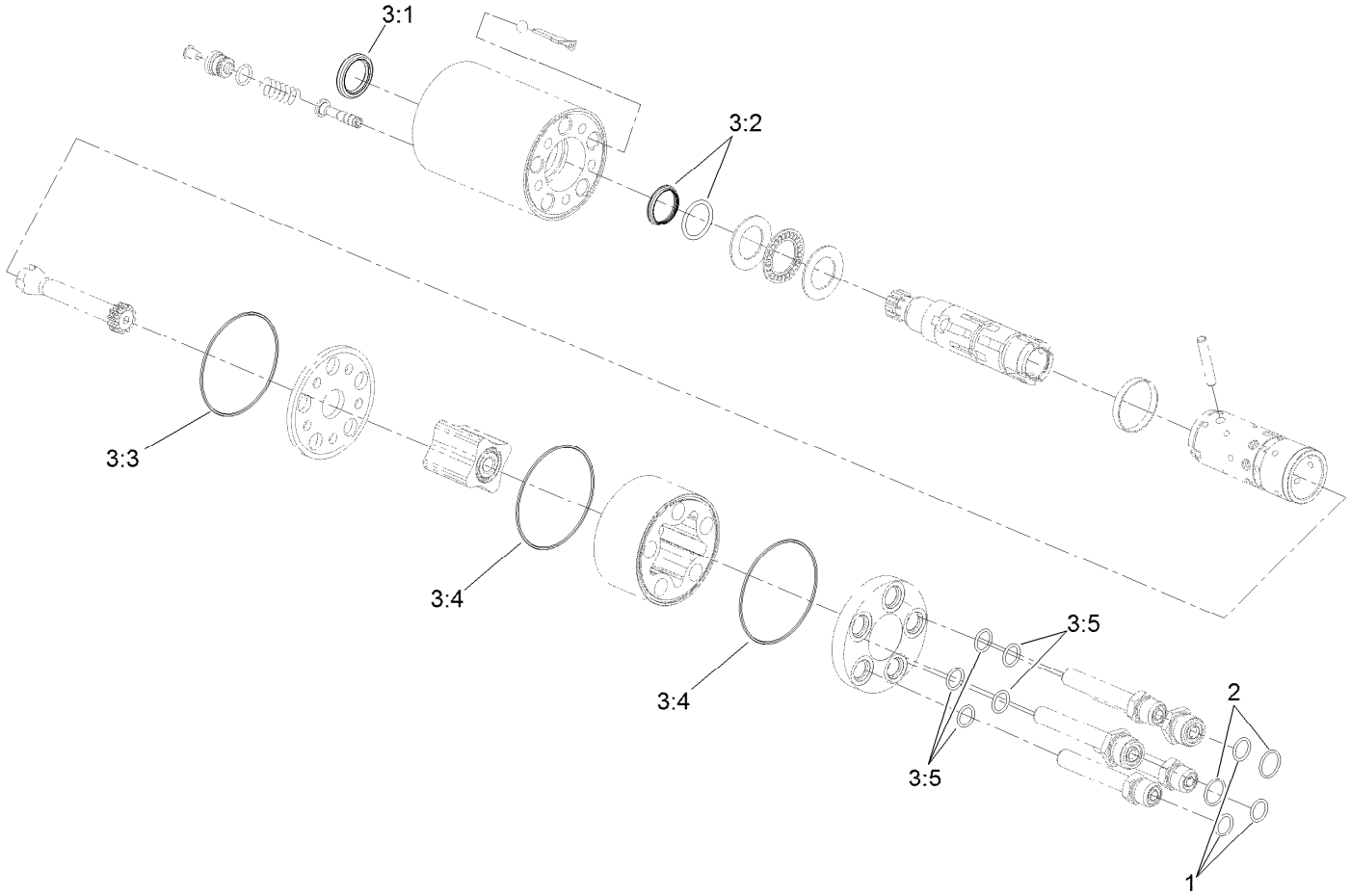

Steer Valve Assembly No. 131-5624

Ref.	*Part Number*	*Qty.*	*Description*
1	237-21	3	O-Ring
2	237-22	2	O-Ring
3	106-6716	1	Seal Kit ●
3:1		1	Ring-Seal, Dust ■
3:2		1	Seal-Shaft ■
3:3		1	O-Ring ■
3:4		2	O-Ring ■
3:5		5	O-Ring ■

● Not illustrated

■ Not serviced separately

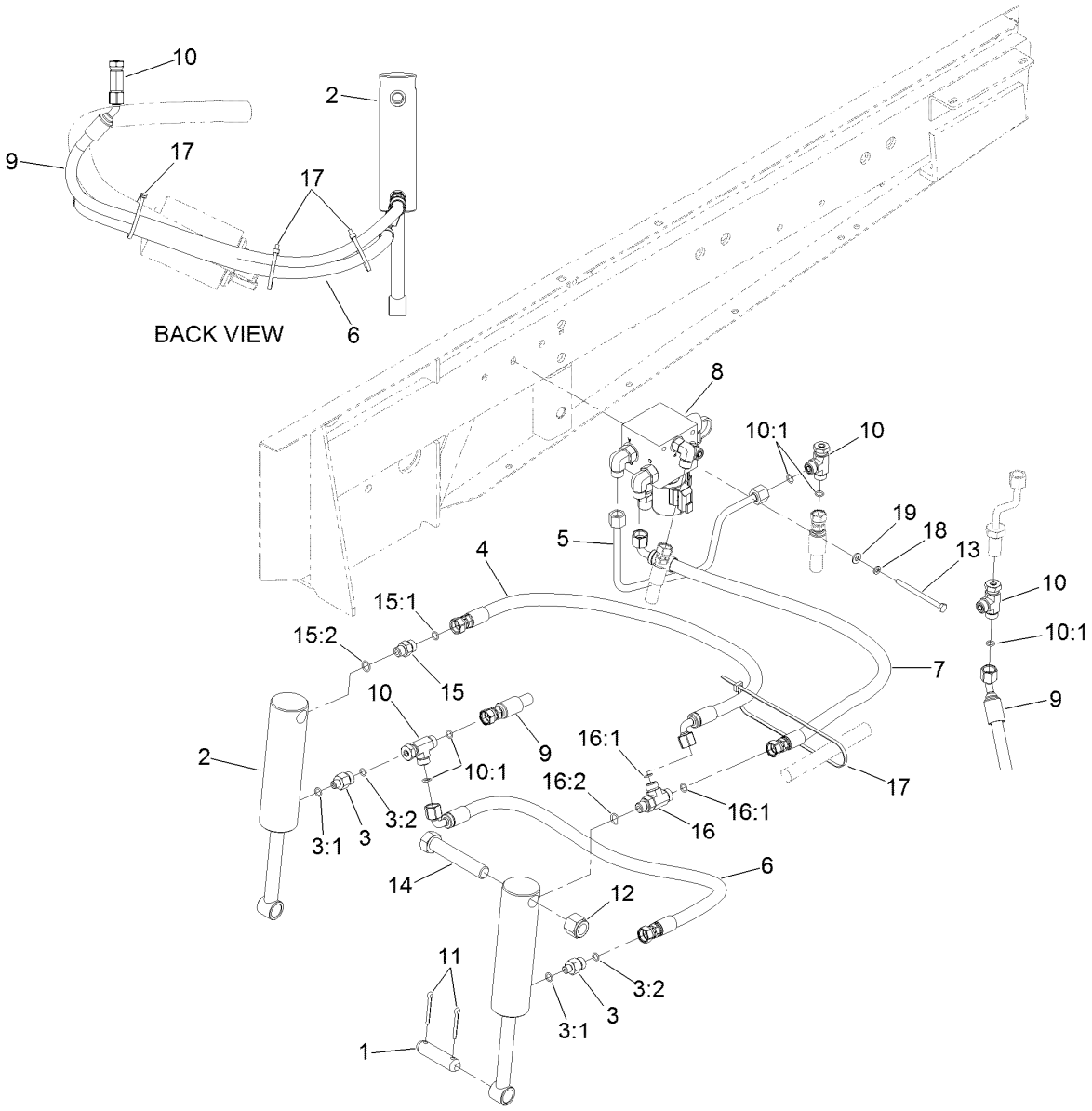

Hydraulic Assembly

Ref.	Part Number	Qty.	Description
1	27-4240	2	Pin-Cylinder
2	63-6630	2	HYD Cylinder ASM
3	340-88	2	Adapter
3:1	237-22	1	O-Ring
3:2	237-78	1	O-Ring
4	95-8828	1	Hose ASM
5	133-6366	1	Tube ASM-HYD
6	114-5500	1	Hose-Hydraulic
7	120-6572	1	Hose-HYD
8	132-7243	1	Valve ASM
9	133-6353	1	Hose ASM-HYD
10	340-115	3	Fitting-Tee, Swivel Nut
10:1	237-22	2	O-Ring

Ref.	Part Number	Qty.	Description
11	3272-23	4	Pin-Cotter
12	3296-51	2	Nut-Lock, NI
13	321-19	2	Screw-HH
14	328-7	2	Screw-HH
15	340-2	1	Fitting-HYD, Straight
15:1	237-22	1	O-Ring
15:2	237-42	1	O-Ring
16	340-86	1	Fitting-Tee
16:1	237-22	2	O-Ring
16:2	237-42	1	O-Ring
17	3290-379	4	Tie-Cable
18	3253-3	2	Washer-Lock
19	3256-22	2	Washer-Flat

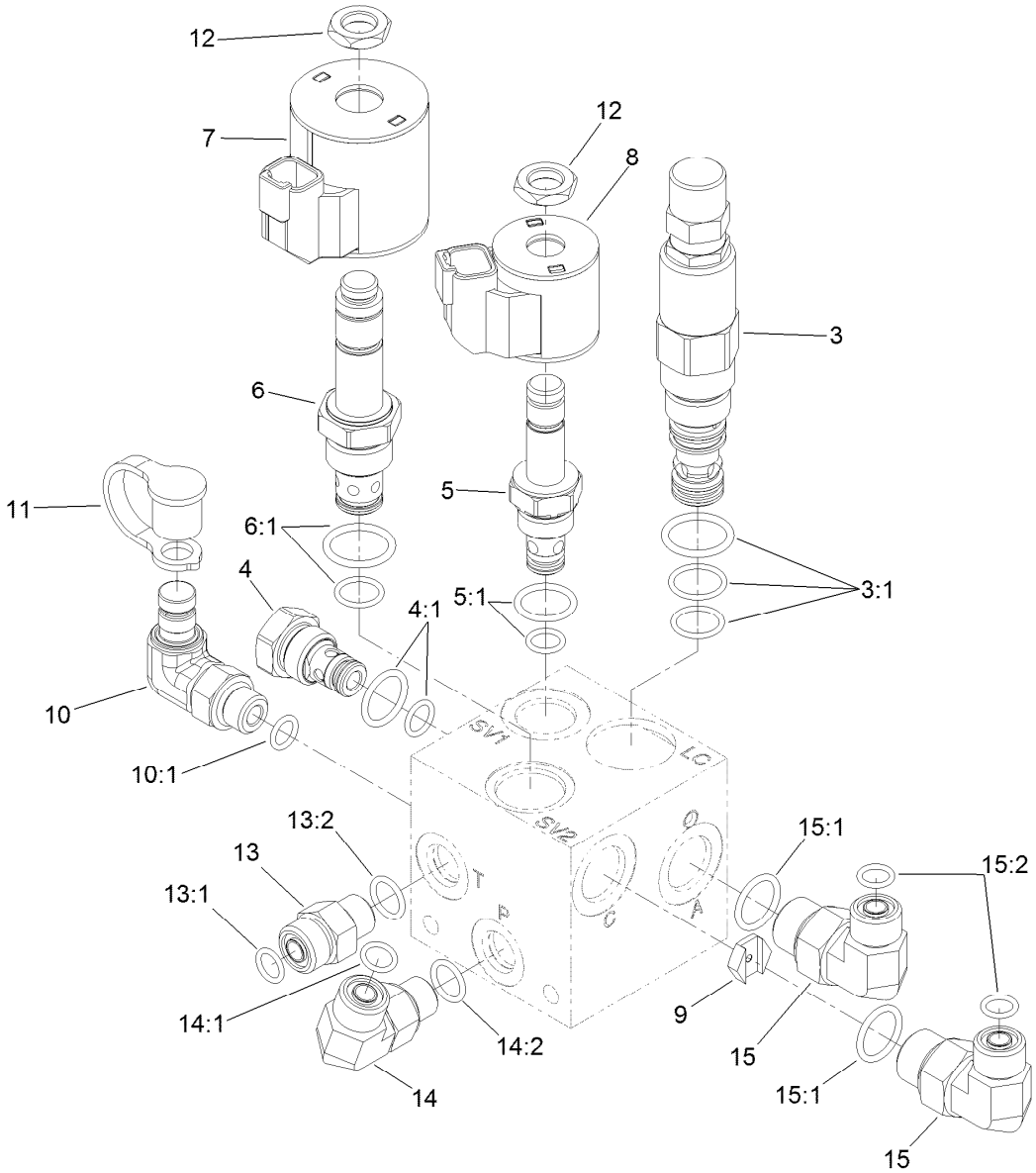

Valve Assembly No. 132-7243

Ref.	Part Number	Qty.	Description
3	120-6554	1	Valve-Logic
3:1	119-2159	1	Seal Kit
4	114-2873	1	Check Valve ASM
4:1	105-9156	1	Seal Kit
5	120-6562	1	Valve-Solenoid
5:1	105-9156	1	Seal Kit
6	120-6561	1	Valve-Solenoid
6:1	105-9159	1	Seal Kit
7	115-3021	1	Coil-12V
8	119-8036	1	Coil
9	120-6558	1	Orifice-Control, Flow (0.100In)
10	115-9147	1	Fitting-Elbow, 90 DEG

Ref.	Part Number	Qty.	Description
10:1	237-78	1	O-Ring
11	354-79	1	Cap-Dust
12	110-2634	2	Nut-Coil
13	340-2	1	Fitting-HYD, Straight
13:1	237-22	1	O-Ring
13:2	237-42	1	O-Ring
14	340-77	1	Fitting-HYD, 90 DEG
14:1	237-22	1	O-Ring
14:2	237-42	1	O-Ring
15	340-18	2	Fitting-HYD, 90 DEG
15:1	237-79	1	O-Ring
15:2	237-22	1	O-Ring

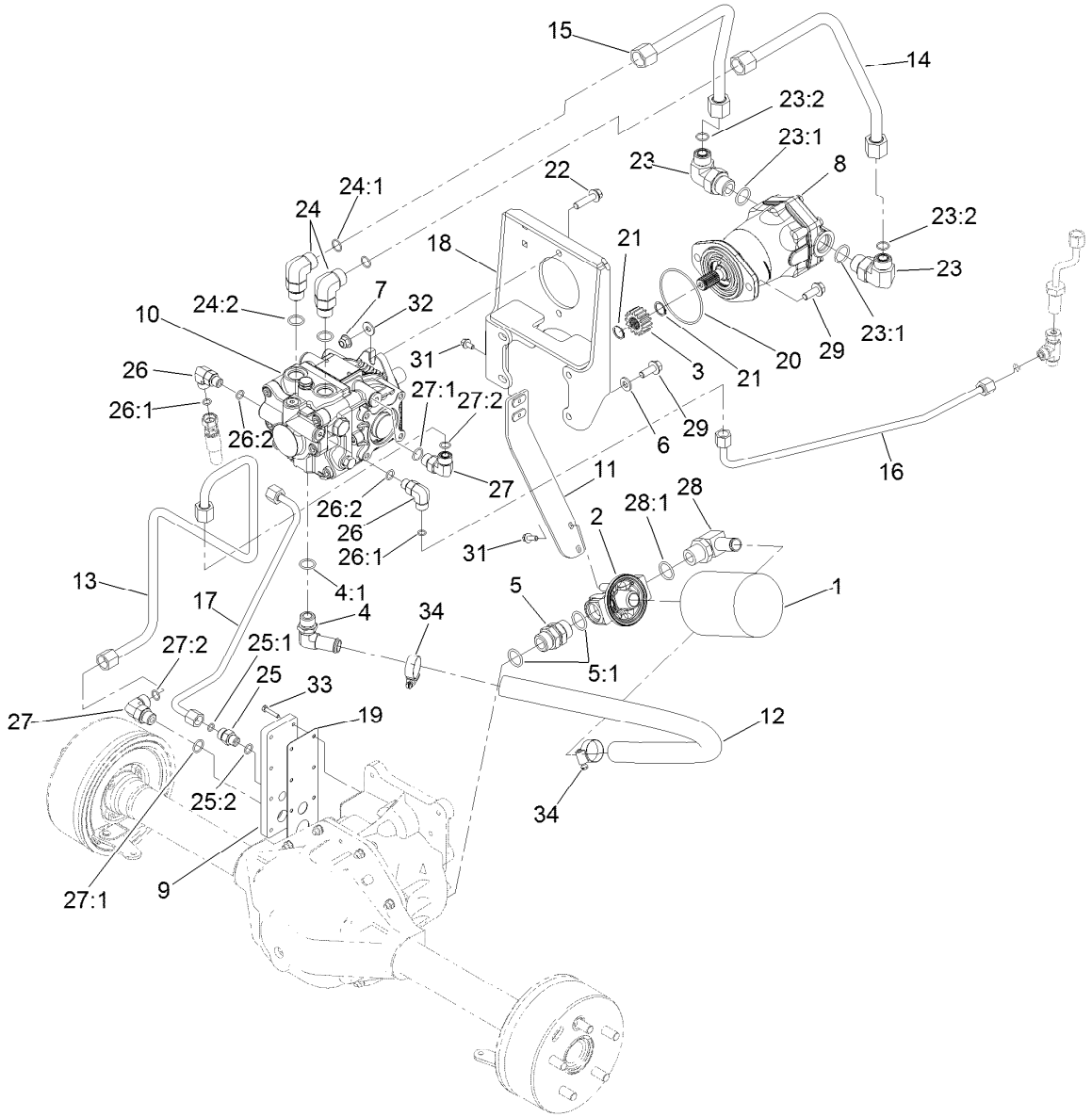

Transmission Hydraulic Assembly

Ref.	Part Number	Qty.	Description
1	54-0110	1	Filter-Oil, Transmission
2	68-8990	1	Head-Filter
3	86-7220	1	Gear-Pinion
4	87-8170	1	Fitting
4:1	237-80	1	O-Ring
5	98-9906	1	Fitting-Thread, Straight
5:1	237-81	2	O-Ring
6	100-4852	1	Washer-Hardened
7	104-8301	2	Nut-Flange, NI
8	130-8724	1	Motor-Hydraulic
9	130-8755	1	Plate-Axle
10	133-6385	1	Pump-Hydraulic
11	132-7227-03	1	Bracket-Filter
12	132-7242	1	Hose-Suction
13	132-7250	1	Tube ASM
14	132-7251	1	Tube ASM
15	132-7252	1	Tube ASM
16	133-6352	1	Tube ASM
17	133-6351	1	Tube ASM
18	132-7276-03	1	Bracket-Pump
19	132-7277	1	Gasket-Plate, Axle

Ref.	Part Number	Qty.	Description
20	237-161	1	O-Ring
21	32120-72	2	Ring-Snap
22	114-4681	2	Screw-HHF
23	340-139	2	Fitting-HYD, 90 DEG
23:1	237-81	1	O-Ring
23:2	237-65	1	O-Ring
24	340-17	2	Fitting-HYD, 90 DEG
24:1	237-65	1	O-Ring
24:2	237-80	1	O-Ring
25	340-2	1	Fitting-HYD, Straight
25:1	237-22	1	O-Ring
25:2	237-42	1	O-Ring
26	340-77	2	Fitting-HYD, 90 DEG
26:1	237-22	1	O-Ring
26:2	237-42	1	O-Ring
27	340-98	2	Fitting-HYD, 90 DEG
27:1	237-79	1	O-Ring
27:2	237-30	1	O-Ring
28	353-987	1	Fitting-HYD, 90 DEG (Barbed)
28:1	237-81	1	O-Ring

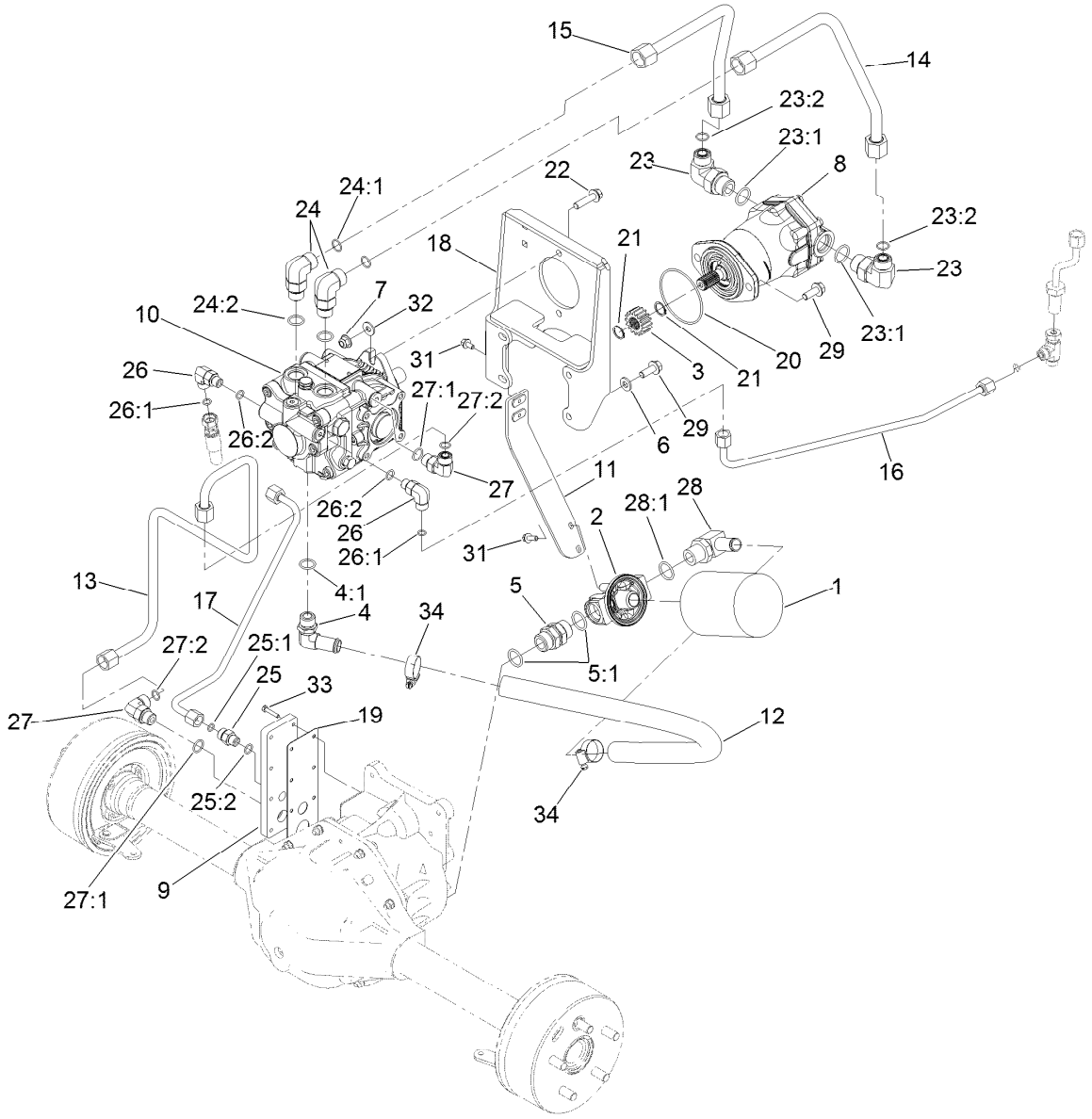

Transmission Hydraulic Assembly (continued)

Ref.	Part Number	Qty.	Description
29	3234-42	6	Screw-HHF
31	3234-4	4	Screw-HHF
32	3256-3	2	Washer-Flat
33	106-9169	8	Screw-HWH
34	2412-129	2	Clamp-Hose

Hydraulic Pump Assembly No. 133-6385

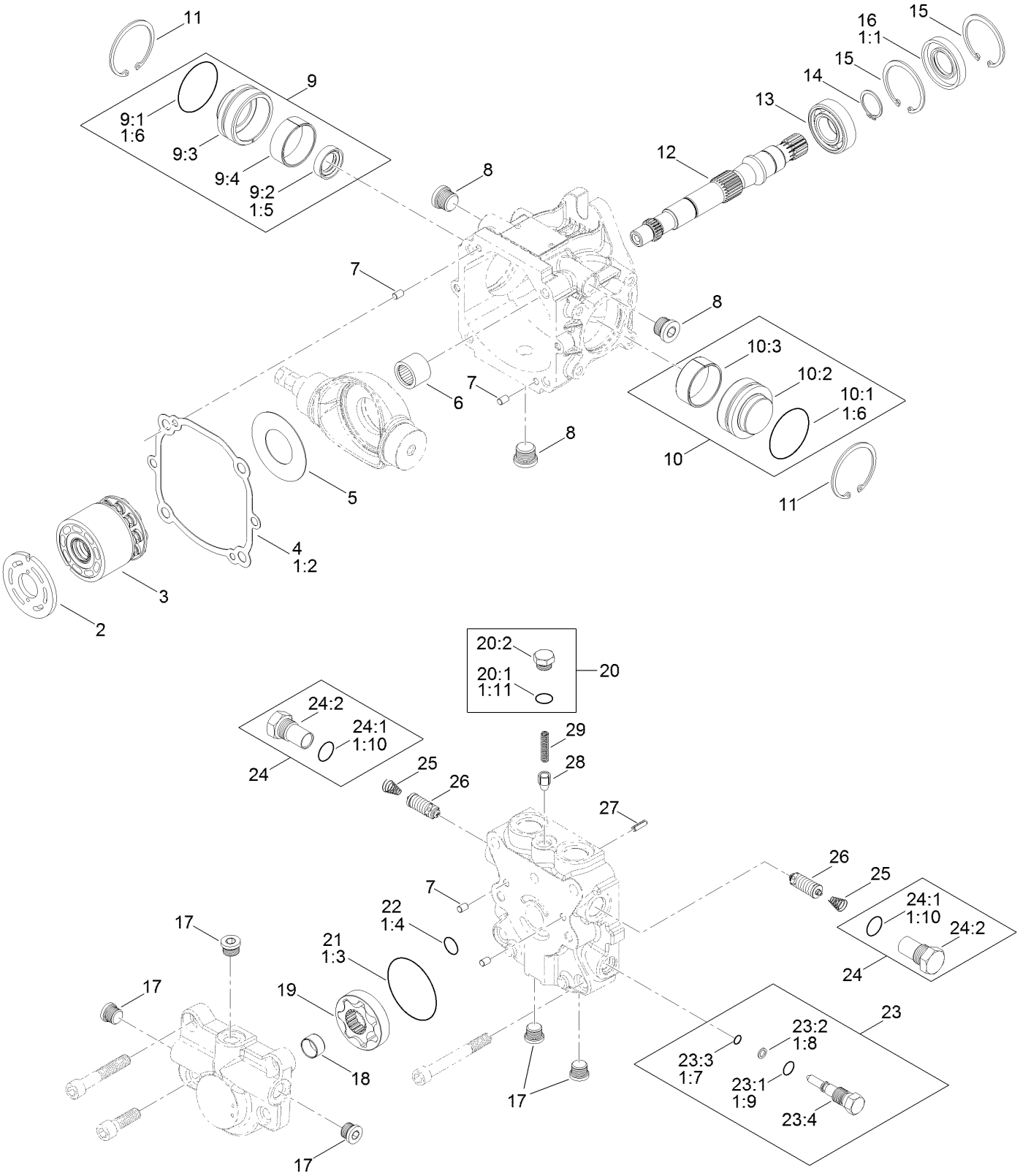

1 = Items Included in Seal Overhaul Kit

Hydraulic Pump Assembly No. 133-6385 (continued)

Ref.	Part Number	Qty.	Description
1	136-1010	1	Seal Overhaul Kit
1:1	136-1021	1	Seal-Lip, Shaft
1:2	136-1023	1	Gasket-Cap, End
1:3	136-1031	1	O-Ring
1:4	136-1032	1	O-Ring
1:5		1	Seal-Lip, Journal Bearing ●
1:6		2	O-Ring, Journal Bearing ●
1:7		1	O Ring-Valve, Bypass ●
1:8		1	Ring-Back Up ●
1:9		1	O Ring-Valve, Bypass ●
1:10		2	O Ring-Plug ●
1:11		1	O Ring-Plug ●
2	136-1012	1	Plate-Valve, CCW
3	136-1011	1	Cylinder Block Kit
4	136-1023	1	Gasket-Cap, End
5	136-1013	1	Plate-Thrust
6	136-1022	1	Bearing-Needle
7	136-1024	4	Pin
8	74-9450	3	Plug
9	136-1014	1	Journal Bearing Carrier ASM
9:1		1	O-Ring ●
9:2		1	Seal-Lip ●
9:3		1	Body ●
9:4		1	Race-Inner ●
10	136-1015	1	Journal Bearing Carrier ASM
10:1		1	O-Ring ●
10:2		1	Body ●
10:3		1	Race-Inner ●
11	136-1020	2	Ring-Retaining
12	136-1016	1	Shaft-Drive
13	136-1017	1	Bearing-Ball
14	136-1018	1	Ring-Retaining
15	136-1019	2	Ring-Retaining
16	136-1021	1	Seal-Lip, Shaft
17	136-1027	5	Plug ASM
18	136-1030	1	Bearing-Journal
19	136-1029	1	Gerotor ASM
20	136-1028	1	Plug ASM
20:1		1	O-Ring ●
20:2		1	Plug ●
21	136-1031	1	O-Ring
22	136-1032	1	O-Ring
23	136-1037	1	Bypass Valve ASM
23:1		1	O-Ring ●
23:2		1	Back Up Ring ●
23:3		1	O-Ring ●
23:4		1	Plug ●
24	136-1025	2	Plug ASM
24:1		1	O-Ring ●
24:2		1	Plug ●
25	136-1035	2	Spring
26	136-1036	2	Valve-Scr
27	131-3800	1	Pin-Slotted
28	136-1033	1	Cone-Valve, Relief
29	136-1034	1	Spring

● Not serviced separately

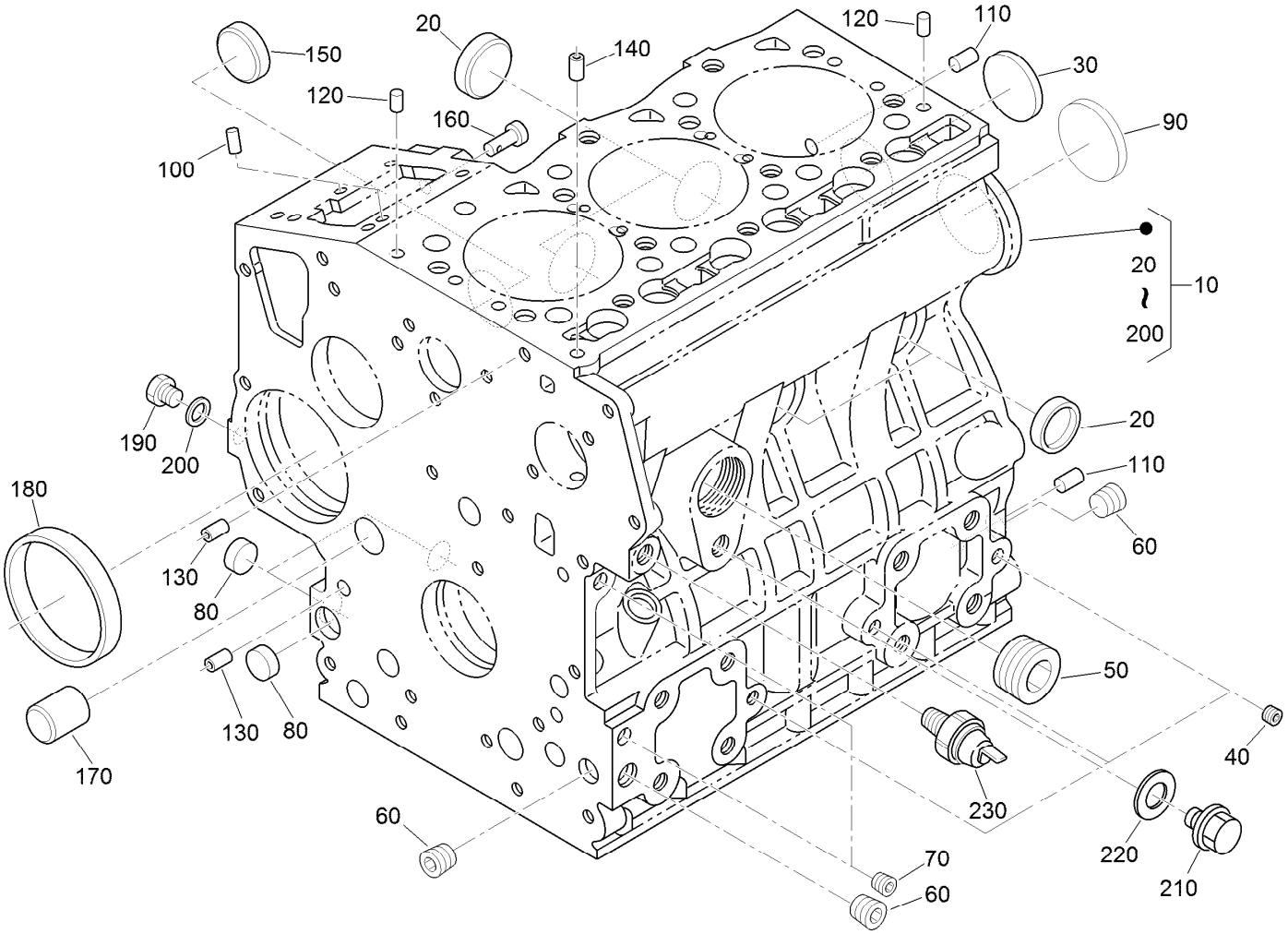

Crankcase Assembly

Ref.	Part Number	Qty.	Description
10	115-3443	1	Crankcase ASM
20	98-9398	4	Cap-Sealing
30	98-7539	1	Cap-Sealing
40	98-9687	3	Plug
50	105-3779	1	Plug
60	98-9597	3	Plug
70	98-7487	2	Plug
80	98-9379	3	Plug-Expansion
90	98-9668	1	Plug-Expansion
100	98-9375	2	Pin-Straight
110	98-9377	2	Pin-Straight
120	98-9376	2	Pin-Straight

Ref.	Part Number	Qty.	Description
130	98-9387	2	Pin-Pipe
140	98-9539	1	Pin-Pipe
150	98-9599	1	Plug
160	98-9630	1	Pin-Spring, Start
170	98-9675	1	Plug
180	98-9656	1	Bushing-Governor, Gear
190	120-2559	1	Plug
200	98-7428	1	Gasket
210	99-3447	1	Plug
220	106-7056	1	Gasket
230	98-9416	1	Switch-Oil

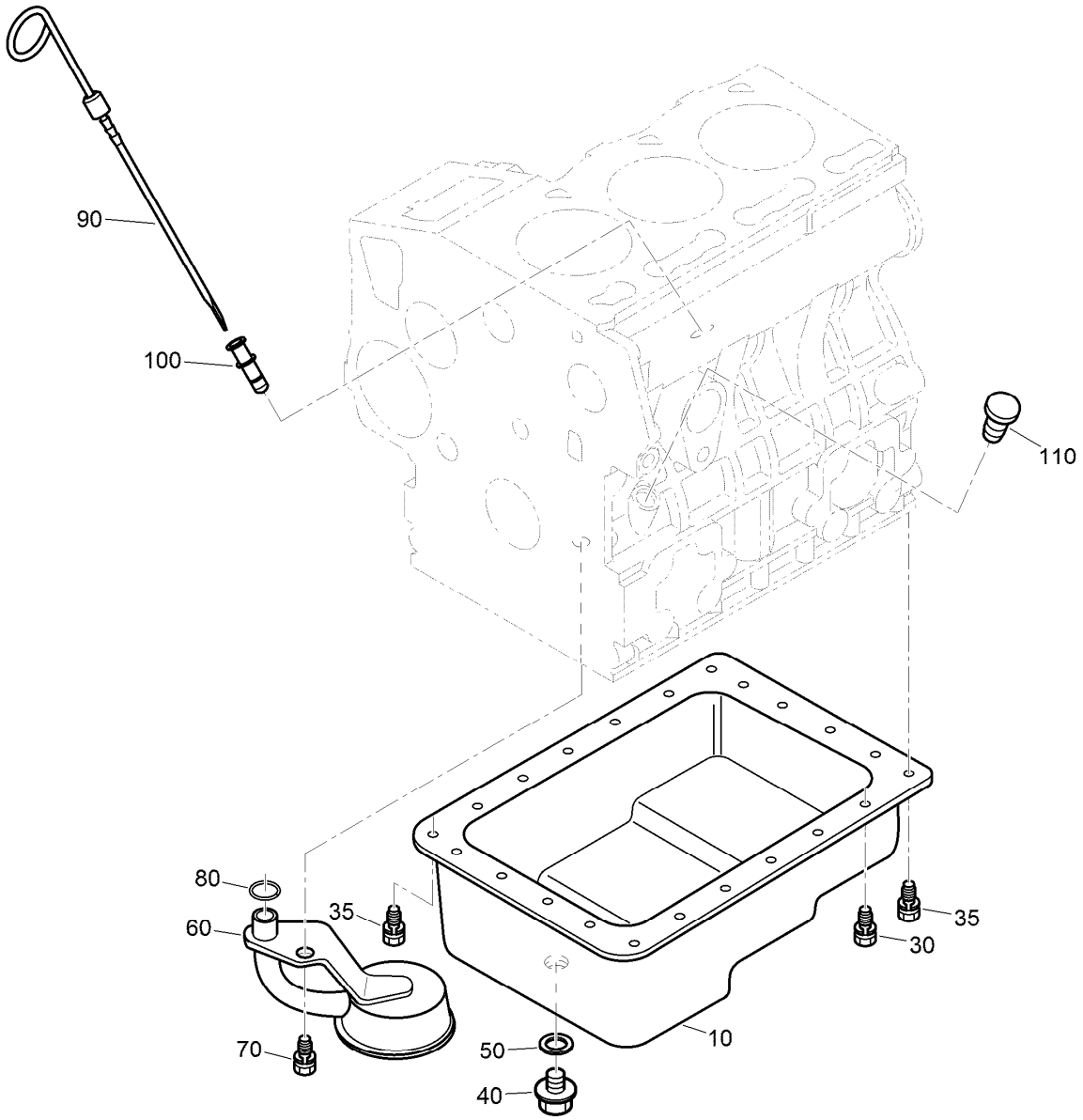

Oil Pan and Dipstick Assembly

Ref.	Part Number	Qty.	Description
10	104-3495	1	Pan-Oil
30	98-9351	20	Bolt
35	98-9351	2	Bolt
40	114-8151	1	Plug-Drain
50	98-7524	1	Gasket
60	130-1292	1	Filter-Oil
70	98-7526	1	Bolt
80	105-3776	1	O-Ring
90	104-9348	1	Gauge-Oil
100	105-4580	1	Guide-Gauge, Oil
110	110-3720	1	Plug-Gauge, Oil

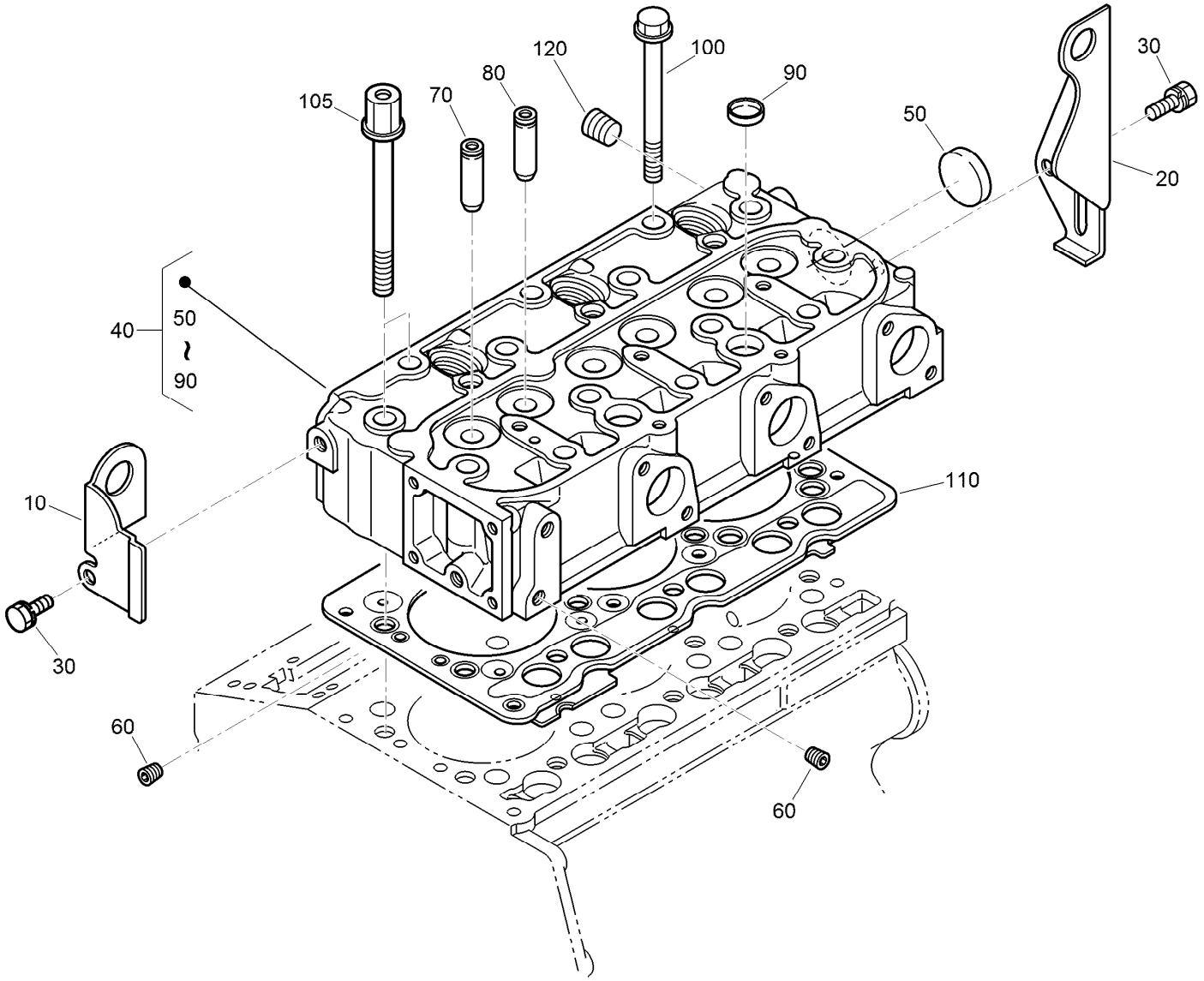

Cylinder Head Assembly

Ref.	Part Number	Qty.	Description
10	130-1231	1	Hook-Engine
20	98-9478	1	Hook-Engine
30	100-9195	2	Bolt
40	130-1544	1	Cylinder Head ASM
50	105-3705	1	Cap-Sealing
60	98-9687	2	Plug
70	107-9066	3	Guide-Valve, Inlet
80	107-9067	3	Guide-Valve, Exhaust
90	98-9389	2	Cap-Sealing
100	98-9479	12	Bolt-Head, Cylinder
105	98-9647	2	Bolt-Head, Cylinder
110	108-6573	1	Gasket-Head, Cylinder
120	98-9444	1	Plug

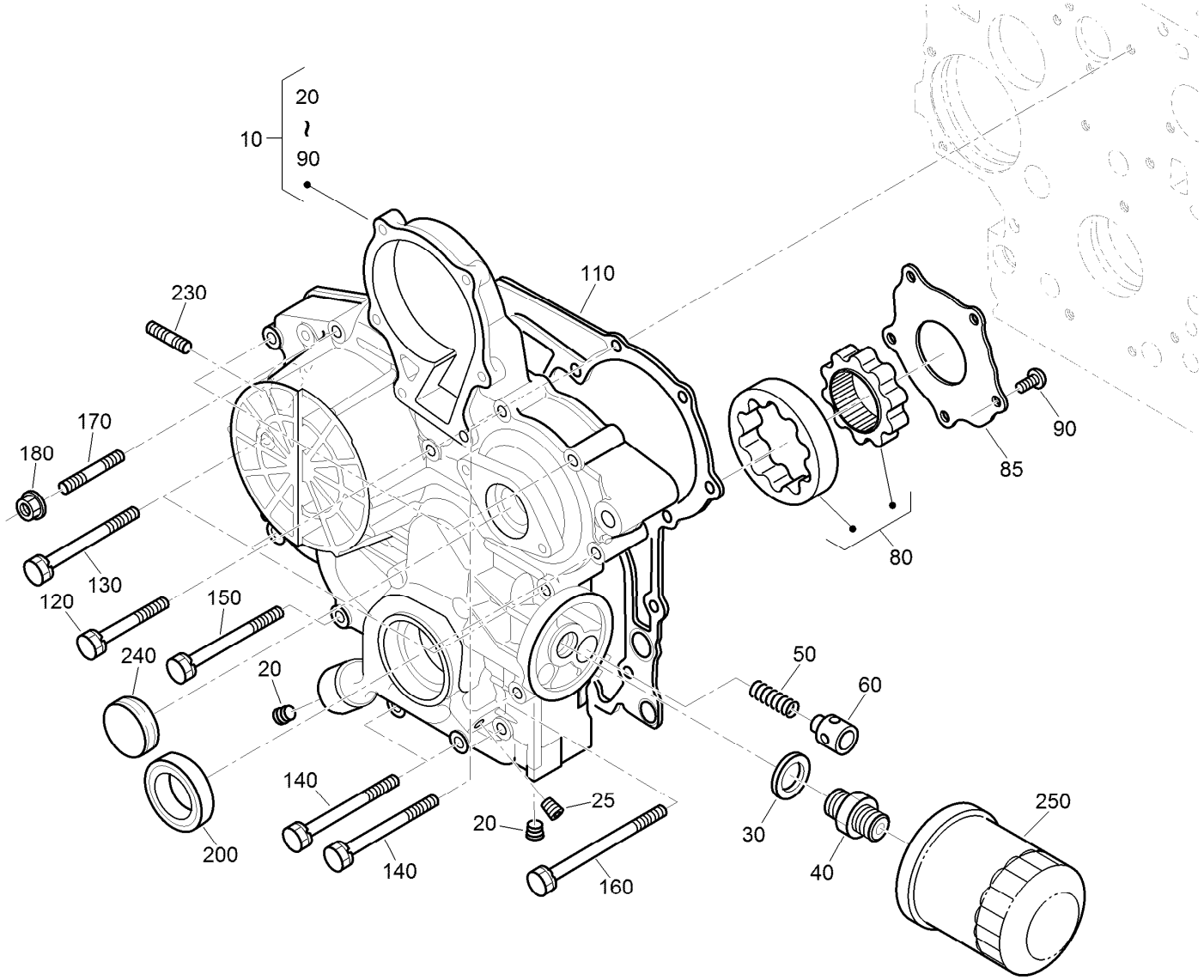

Gear Case and Oil Filter Cartridge Assembly

Ref.	Part Number	Qty.	Description
10	130-1243	1	Gear Case ASM
20	98-9598	2	Plug
25	98-7487	1	Plug
30	98-7562	1	Washer-Plain
40	98-9388	1	Joint-Pipe
50	130-1511	1	Spring
60	130-1510	1	Valve-Relief
80	130-1508	1	Rotor ASM
85	130-1509	1	Cover-Pump, Oil
90	130-1164	5	Screw-Binding
110	98-9633	1	Gasket-Case, Gear

Ref.	Part Number	Qty.	Description
120	100-1765	3	Bolt
130	125-9063	4	Bolt-Sems
140	98-9356	4	Bolt
150	107-9074	1	Bolt
160	98-9586	1	Bolt
170	105-3709	1	Stud
180	100-2203	1	Nut-Flange
200	119-8038	1	Seal-Oil
230	105-3710	2	Stud
240	98-9641	1	Cover-Case, Gear
250	127-0511	1	Filter-Oil

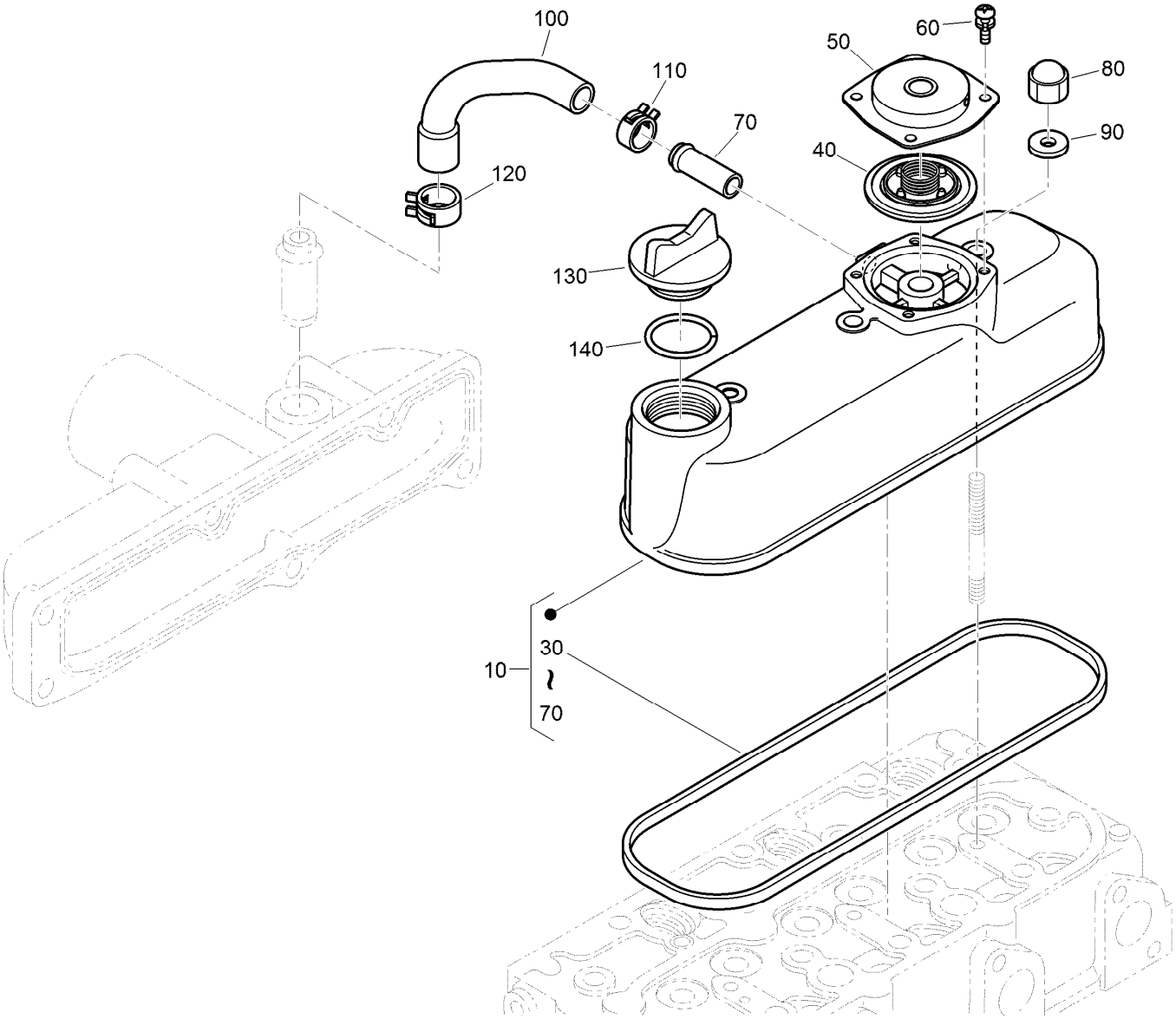

Cylinder Head Cover Assembly

Ref.	Part Number	Qty.	Description
10	130-1372	1	Cylinder Head Cover ASM
30	130-1249	1	Gasket-Head Cover
40	110-3715	1	Valve-Breather
50	110-3714	1	Cover-Breather
60	98-9364	4	Screw (With Washer)
70	98-7766	1	Pipe-Return, Water
80	98-9455	3	Nut-Cap
90	98-9454	3	Gasket
100	108-2858	1	Tube-Breather
110	108-2859	1	Clamp-Hose
120	108-2860	1	Clamp-Hose
130	107-9075	1	Plug-Filler, Oil
140	99-3446	1	O-Ring

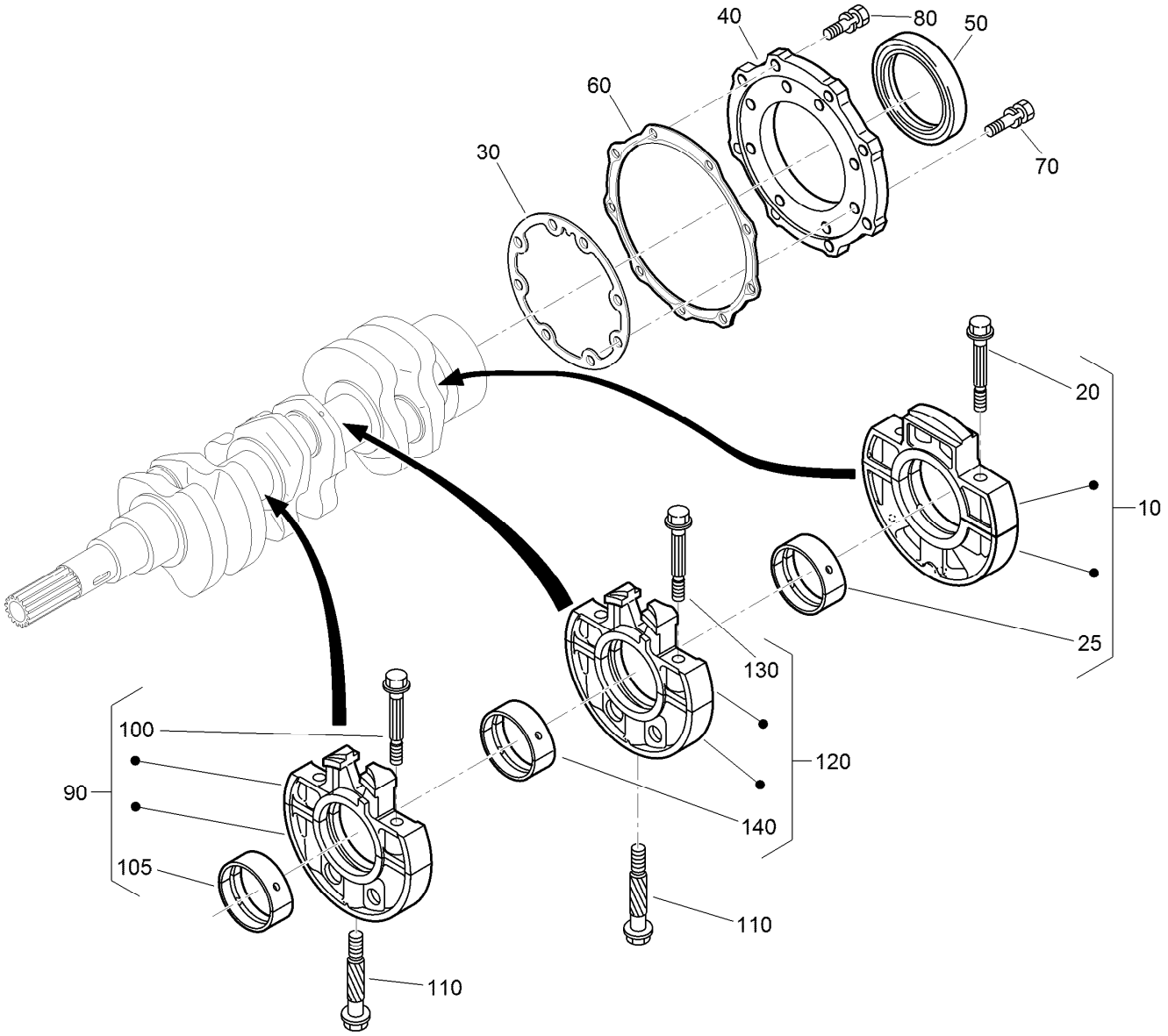

Main Bearing Case Assembly

Ref.	Part Number	Qty.	Description
10	112-7026	1	Wheel Bearing Case ASM
20	98-9484	2	Bolt-Case, Bearing
25	115-4121	1	Metal-Crankshaft (STD)
25	112-7039	1	Metal-Crankshaft (0.2Mm)
25	112-7040	1	Metal-Crankshaft (-0.4Mm)
30	127-0440	1	Gasket-Case, Bearing
40	112-7046	1	Cover-Case, Bearing
50	112-0180	1	Seal-Oil
60	112-7037	1	Gasket-Cover, Case
70	127-0441	8	Bolt
80	127-0442	9	Bolt

Ref.	Part Number	Qty.	Description
90	115-4106	1	Main Bearing Case ASM
100	98-9484	2	Bolt-Case, Bearing
105	98-9524	1	Metal-Crankshaft (STD Set)
105	127-0433	1	Metal-Crankshaft (-0.2Mm)
105	98-9531	1	Bearing-Main (0.4Mm)
110	98-9485	2	Bolt-Case, Bearing
120	115-4107	1	Main Bearing Case ASM
130	98-9484	2	Bolt-Case, Bearing
140	98-9524	1	Metal-Crankshaft (STD Set)
140	127-0433	1	Metal-Crankshaft (-0.2Mm)
140	98-9531	1	Bearing-Main (0.4Mm)

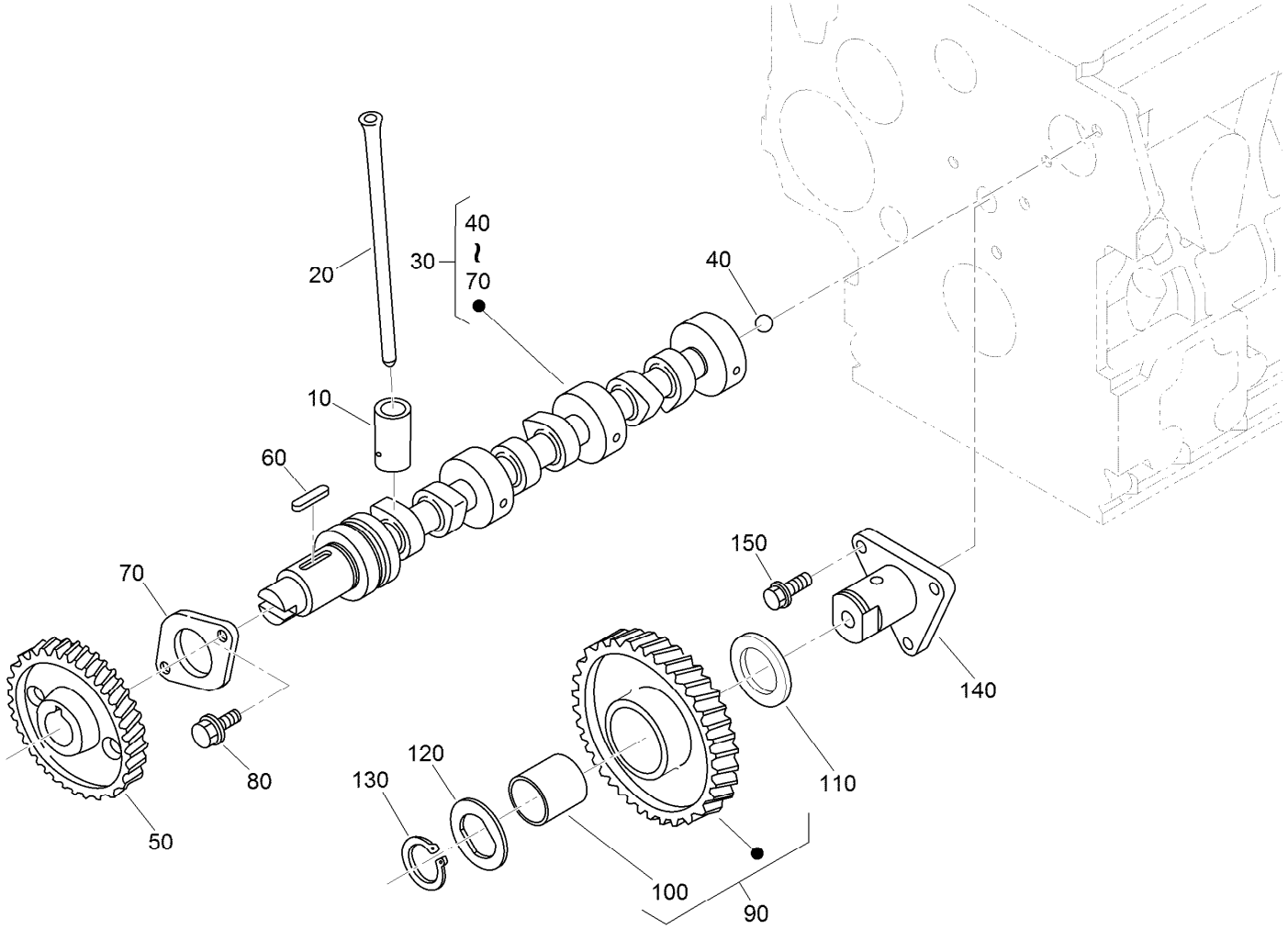

Camshaft and Idle Gear Shaft Assembly

Ref.	Part Number	Qty.	Description
10	112-0185	6	Tappet
20	127-0421	6	Rod-Push
30	130-1545	1	Camshaft ASM
40	110-3729	1	Ball
50	98-9512	1	Gear-Cam
60	98-9378	1	Key-Feather
70	98-9510	1	Stopper-Camshaft
80	98-7692	2	Bolt
90	117-7584	1	Idler Gear ASM
100	117-7585	1	Bushing-Gear, Idle
110	98-9535	1	Collar-Gear, Idle
120	98-9536	1	Collar-Gear, Idle
130	98-9534	1	Circlip-Gear, Idle
140	98-9533	1	Shaft-Gear, Idle
150	98-7692	3	Bolt

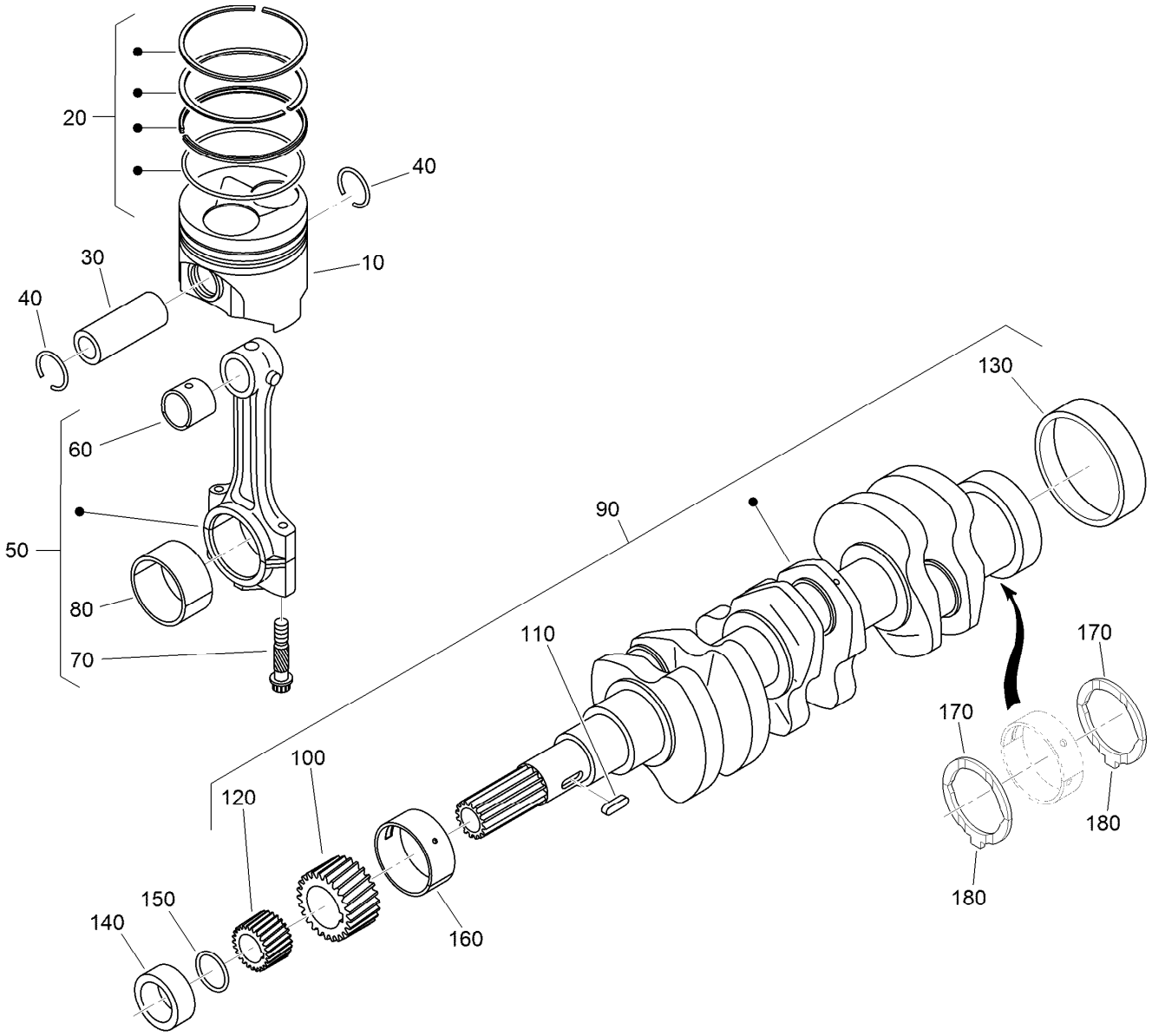

Piston and Crankshaft Assembly

Ref.	Part Number	Qty.	Description
10	130-1546	3	Piston (STD)
10	130-1549	3	Piston (+0.50Mm)
20	130-1506	3	Piston Ring ASM (STD)
20	130-1507	3	Piston Ring ASM (+0.50Mm)
30	98-9513	3	Pin-Piston
40	98-9514	6	Circlip-Pin, Piston
50	117-7586	3	Connecting Rod ASM
60	115-3014	3	Bushing-Pin, Piston
70	98-9517	6	Bolt-Rod, Connecting
80	98-9553	3	Bearing-Rod (STD)
80	117-7587	3	Metal-Crankpin (-0.2Mm)
80	117-7588	3	Metal-Crankpin (-0.4Mm)
90	130-1375	1	Crankshaft ASM
100	117-7561	1	Gear-Crankshaft

Ref.	Part Number	Qty.	Description
110	98-9666	1	Key
120	127-0445	1	Gear-Drive, Oil Pump
130	98-9522	1	Sleeve-Crankshaft
140	127-0444	1	Collar-Crankshaft
150	105-3783	1	O-Ring
160	112-7005	1	Bearing-Main (STD)
160	98-9528	1	Bearing-Main (-0.2Mm)
160	130-1274	1	Metal-Crankshaft (-0.40Mm)
170	98-9413	2	Bearing-Thrust (STD)
170	127-0416	2	Metal-Side (+0.2Mm)
170	127-0417	2	Metal-Side (+0.40Mm)
180	98-9688	2	Bearing-Thrust (STD)
180	127-0437	2	Metal-Side (+0.2Mm)
180	127-0438	2	Metal-Side (+0.40Mm)

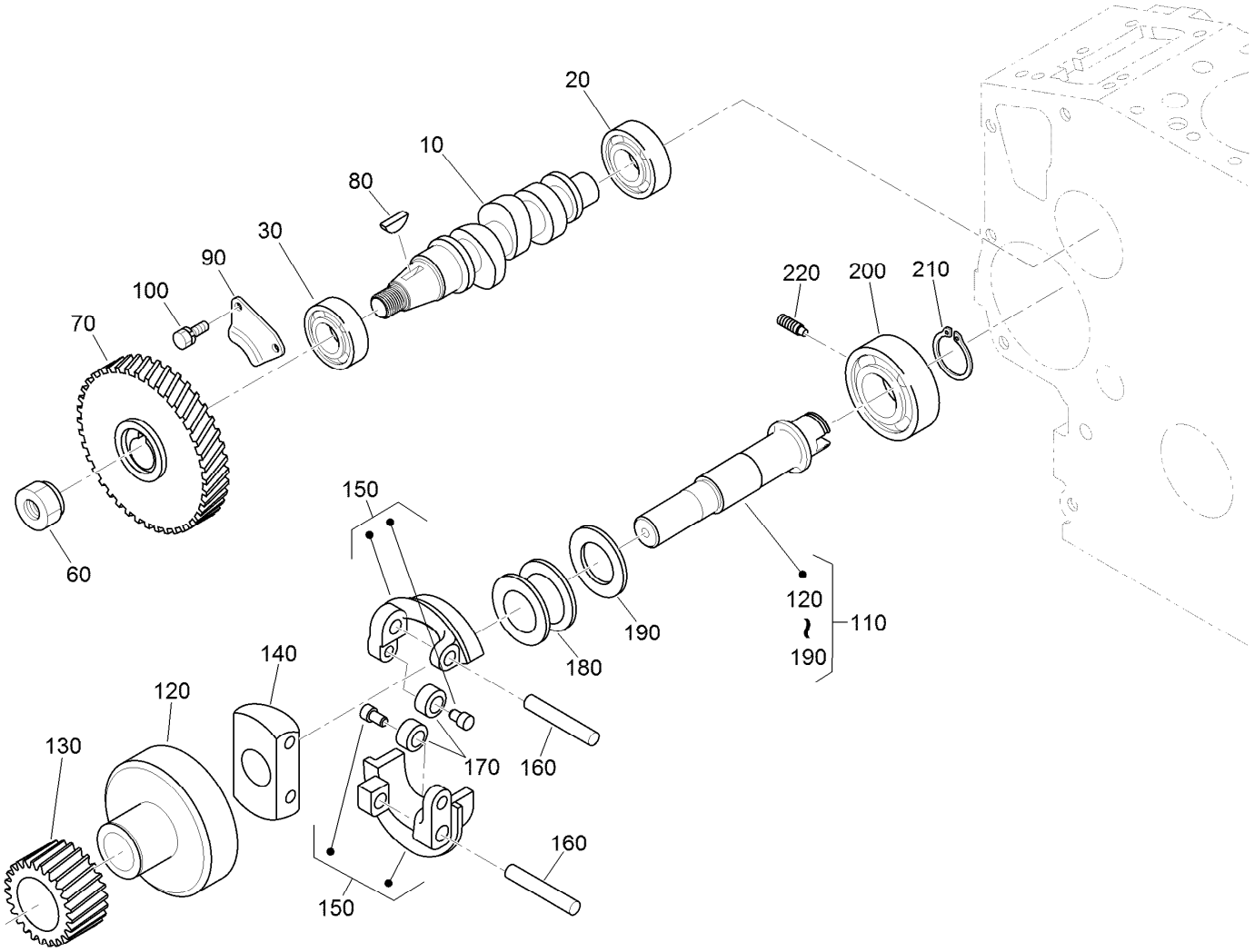

Fuel Camshaft and Governor Shaft Assembly

Ref.	Part Number	Qty.	Description
10	98-9459	1	Camshaft-Fuel
20	107-9077	1	Bearing-Ball
30	107-9078	1	Bearing-Ball
60	130-1512	1	Nut
70	120-2562	1	Gear-Pump, Injection
80	98-9595	1	Key-Woodruff
90	98-9511	1	Stopper-Fuel, Camshaft
100	98-7692	2	Bolt
110	130-1255	1	Governor Shaft ASM
120	98-9562	1	Holder-Gear, Governor

Ref.	Part Number	Qty.	Description
130	98-9673	1	Gear-Governor
140	98-9561	1	Holder-Weight, Governor
150	130-1240	2	Governor Weight ASM
160	98-9560	2	Shaft-Weight, Governor
170	98-9692	2	Roller
180	98-9563	1	Sleeve-Governor
190	98-9564	1	Washer-Thrust
200	107-9079	1	Bearing-Ball
210	98-9657	1	Circlip-Shaft, Governor
220	98-9565	1	Screw-Set

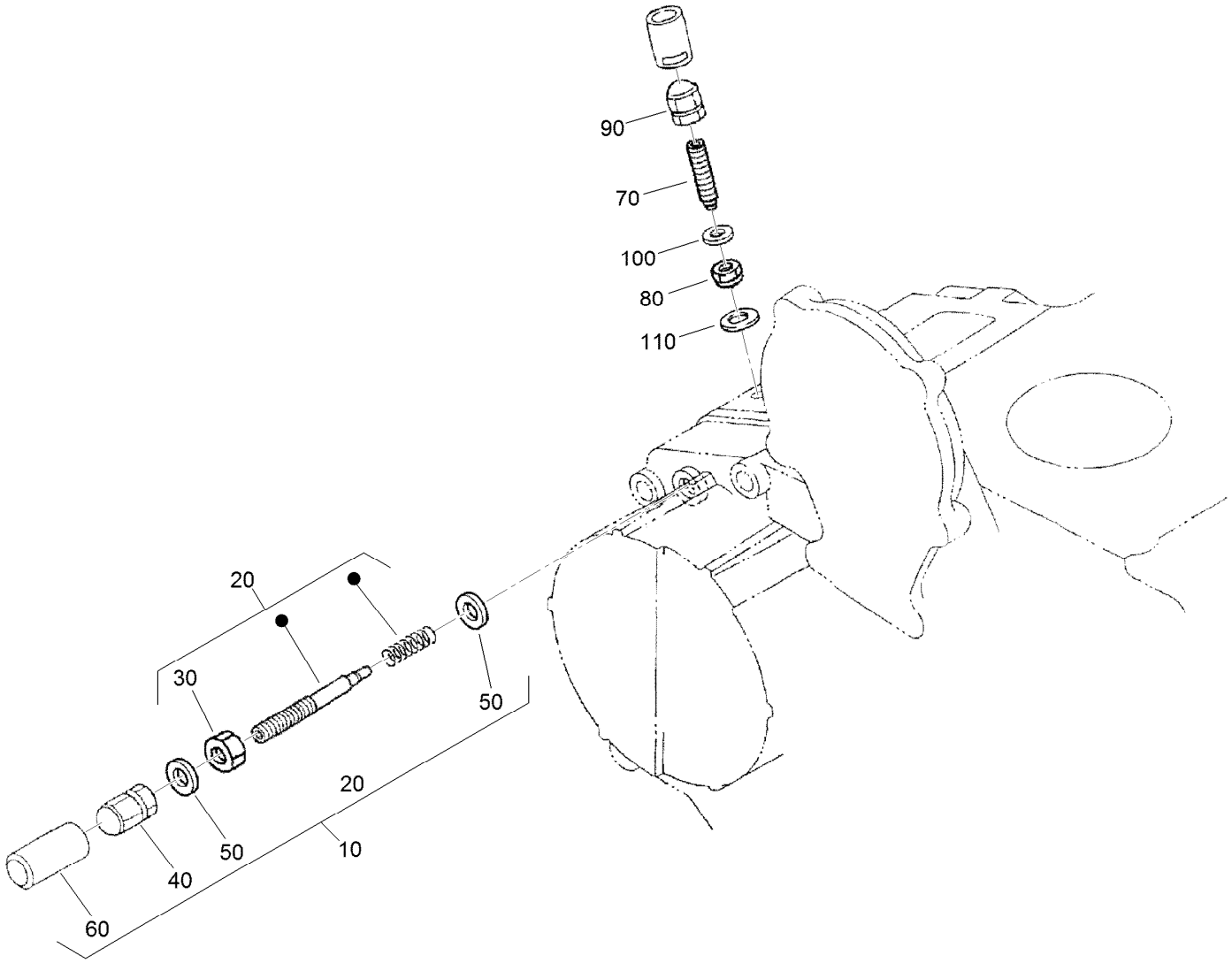

Idle Apparatus Assembly

Ref.	*Part Number*	*Qty.*	*Description*
10	98-9678	1	Idle Apparatus ASM
20	112-7014	1	Adjusting Bolt ASM
30	98-9439	1	Nut
40	112-0181	1	Nut
50	98-7654	2	Gasket
60	98-7656	1	Cap
70	112-7015	1	Bolt-Adjusting
80	100-2175	1	Nut-Lock
90	112-0181	1	Nut
100	98-7654	1	Gasket
110	107-9081	1	Gasket

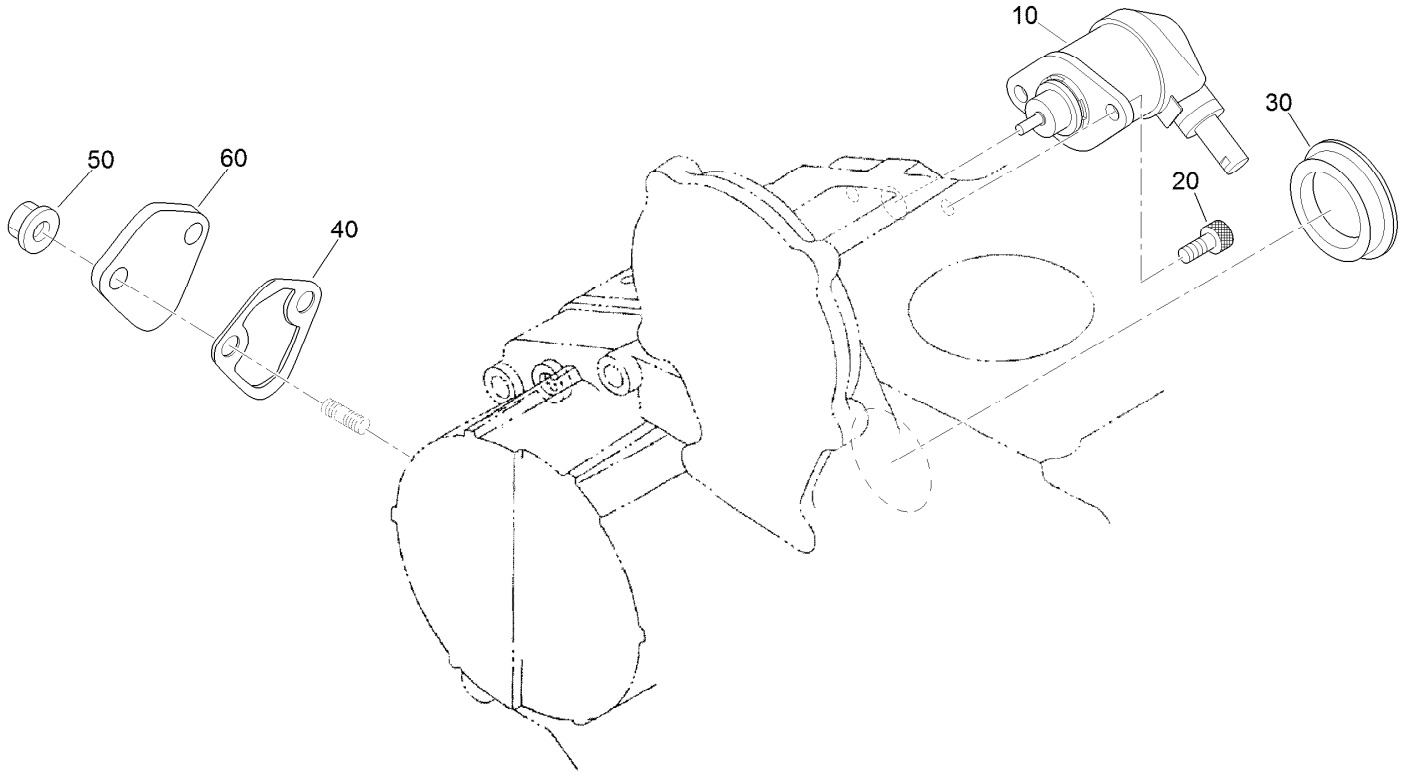

Stop Solenoid and Fuel Pump Cover Assembly

Ref.	*Part Number*	*Qty.*	*Description*
10	104-5155	1	Solenoid-Stop
20	130-1155	2	Screw-HSH
30	99-3514	1	Cover
40	117-7562	1	Gasket-Pump, Fuel
50	100-2203	2	Nut-Flange
60	112-7016	1	Cover-Pump

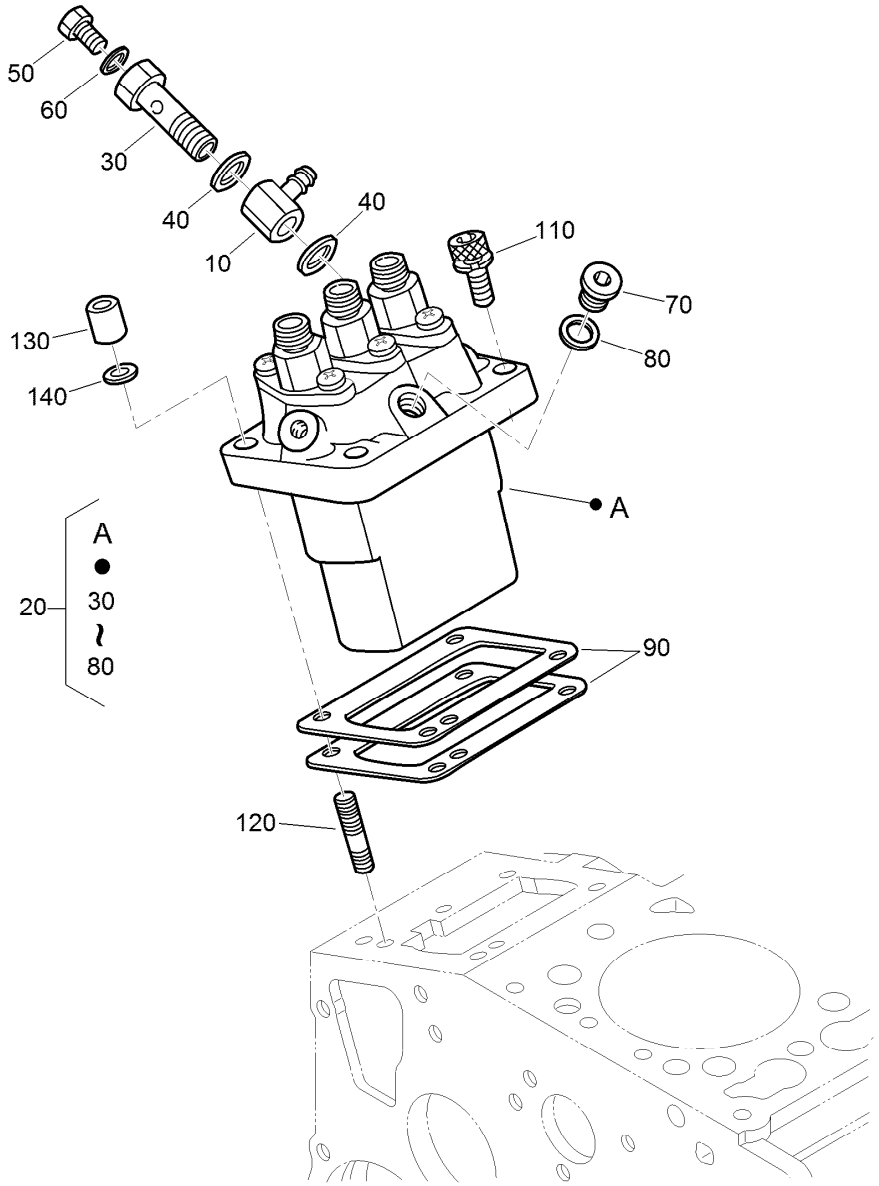

Injection Pump Assembly

Ref.	Part Number	Qty.	Description
10	98-9596	1	Joint-Eye
20	98-9643	1	Injection Pump ASM
30	98-9464	1	Bolt-Joint
40	98-9445	2	Gasket
50	98-9430	1	Screw
60	98-9446	1	Gasket
70	98-9466	1	Plug
80	98-9451	1	Gasket
90	98-9456	1	Shim-Injection (0.20Mm)

Ref.	Part Number	Qty.	Description
90	98-9457	1	Shim-Injection (0.25Mm)
90	98-9458	1	Shim-Injection (0.30Mm)
90	115-3046	1	Shim-Injection (0.35Mm)
90	115-3045	1	Shim-Injection (0.175Mm)
110	117-7564	2	Bolt-Hex Soc HD
120	98-9438	2	Stud
130	98-9440	2	Nut-Cap
140	98-7699	2	Washer-Spring

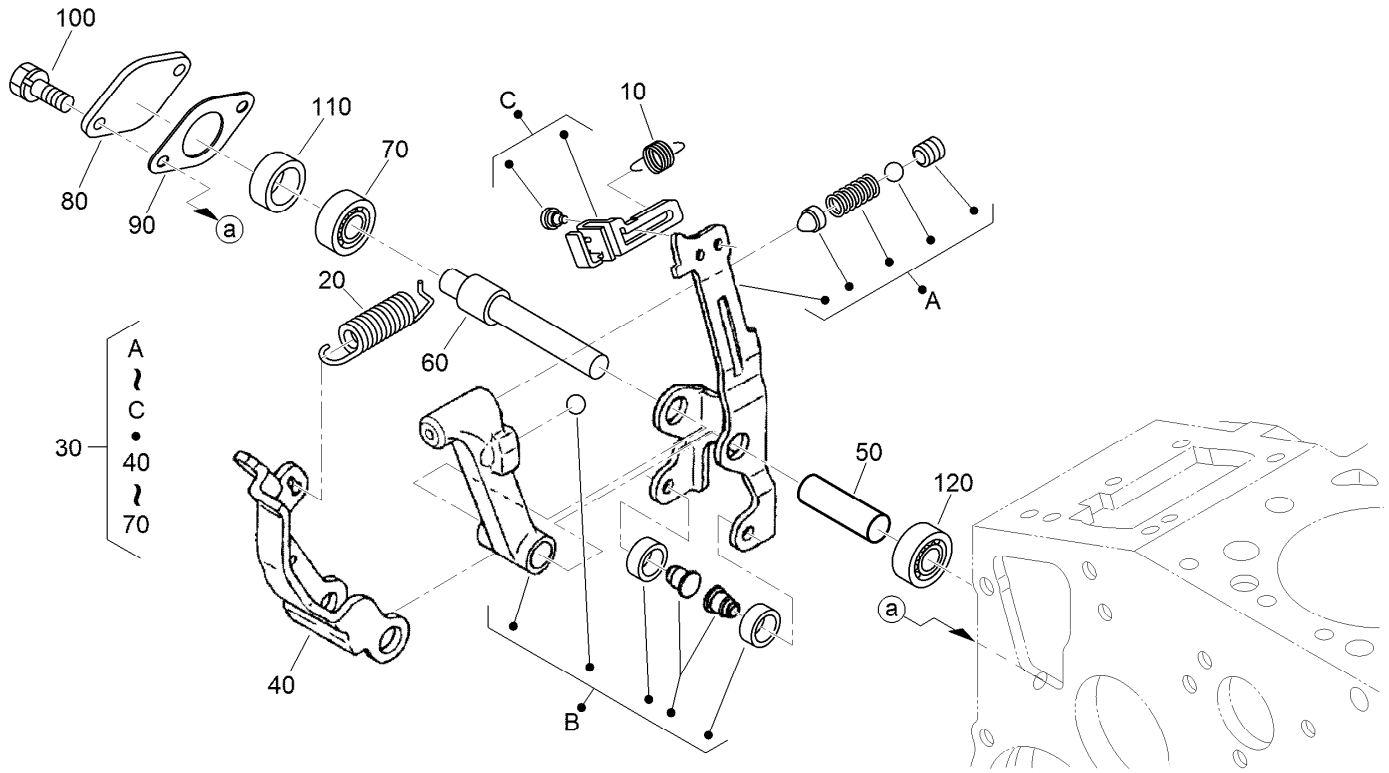

Governor Assembly

Ref.	Part Number	Qty.	Description
10	105-3786	1	Spring-Start
20	98-9681	1	Spring-Governor
30	115-4502	1	Fork Lever ASM
40	107-9084	1	Lever-Fork
50	107-9085	1	Shaft-Lever, Fork
60	107-9086	1	Shaft-Lever, Fork
70	98-9570	1	Bearing-Miniaturize
80	115-4122	1	Cover-Shaft, Fork Lever
90	98-9682	1	Gasket
100	98-9350	2	Bolt
110	98-9567	1	Collar
120	98-9571	1	Bearing-Miniaturize

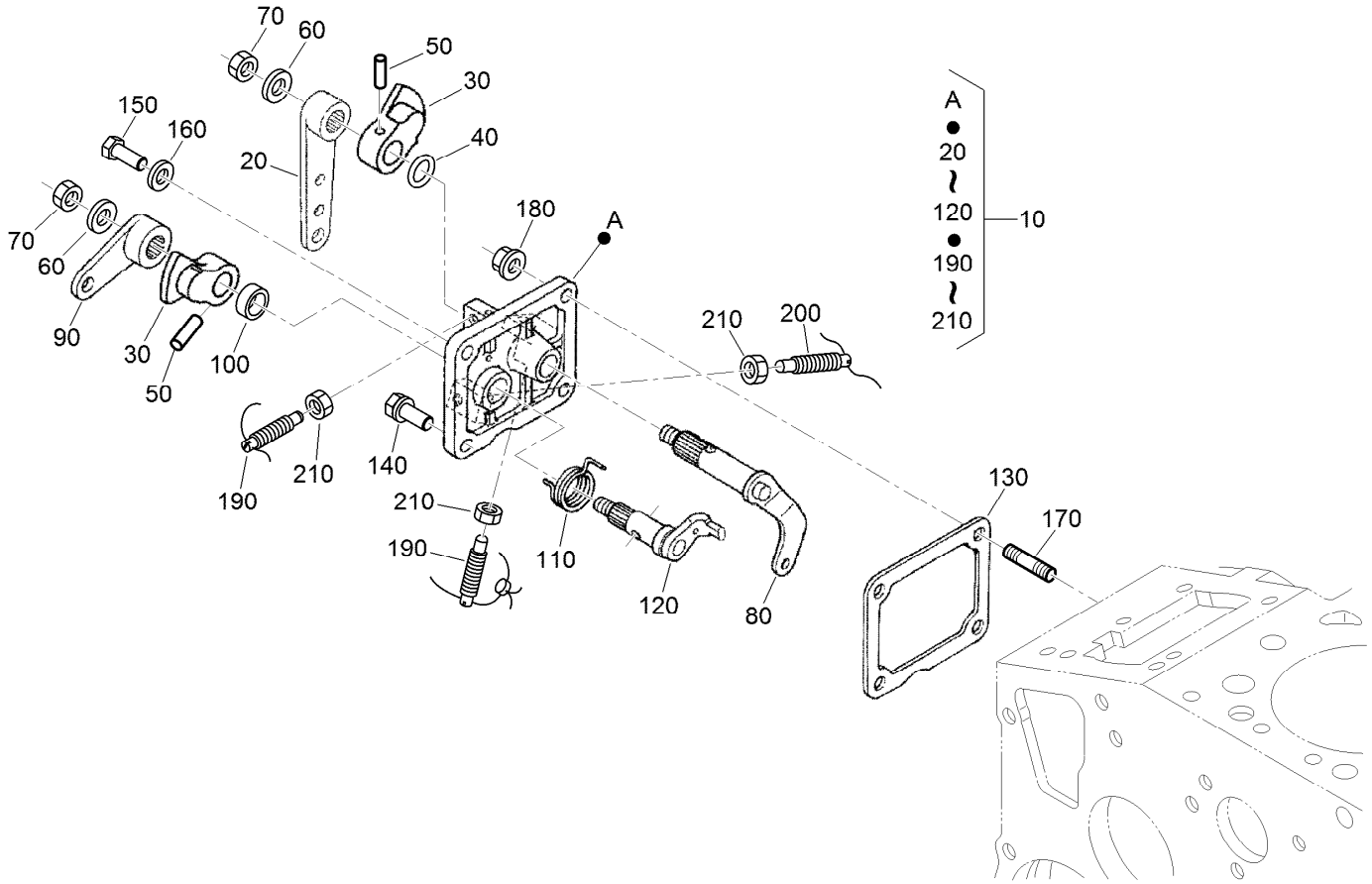

Speed Control Plate Assembly

Ref.	Part Number	Qty.	Description
10	105-3735	1	Control Plate ASM
20	98-9662	1	Lever-Control, Speed
30	98-9572	2	Lever-Control, Speed
40	105-3788	1	O-Ring
50	98-7602	2	Pin-Spring
60	98-9594	2	Washer-Plain
70	98-9589	2	Nut
80	98-9658	1	Governor Lever ASM
90	98-9663	1	Lever-Stop, Engine
100	98-7601	1	Seal-Oil
110	98-9472	1	Spring-Return

Ref.	Part Number	Qty.	Description
120	98-9664	1	Shaft-Lever, Stop
130	98-9637	1	Gasket
140	98-7692	1	Bolt
150	127-0401	1	Bolt-Hex
160	98-7654	1	Gasket
170	105-3710	2	Stud
180	100-2203	2	Nut-Flange
190	117-7565	2	Bolt-Adjusting
200	117-7566	1	Bolt-Adjusting
210	98-7572	3	Nut

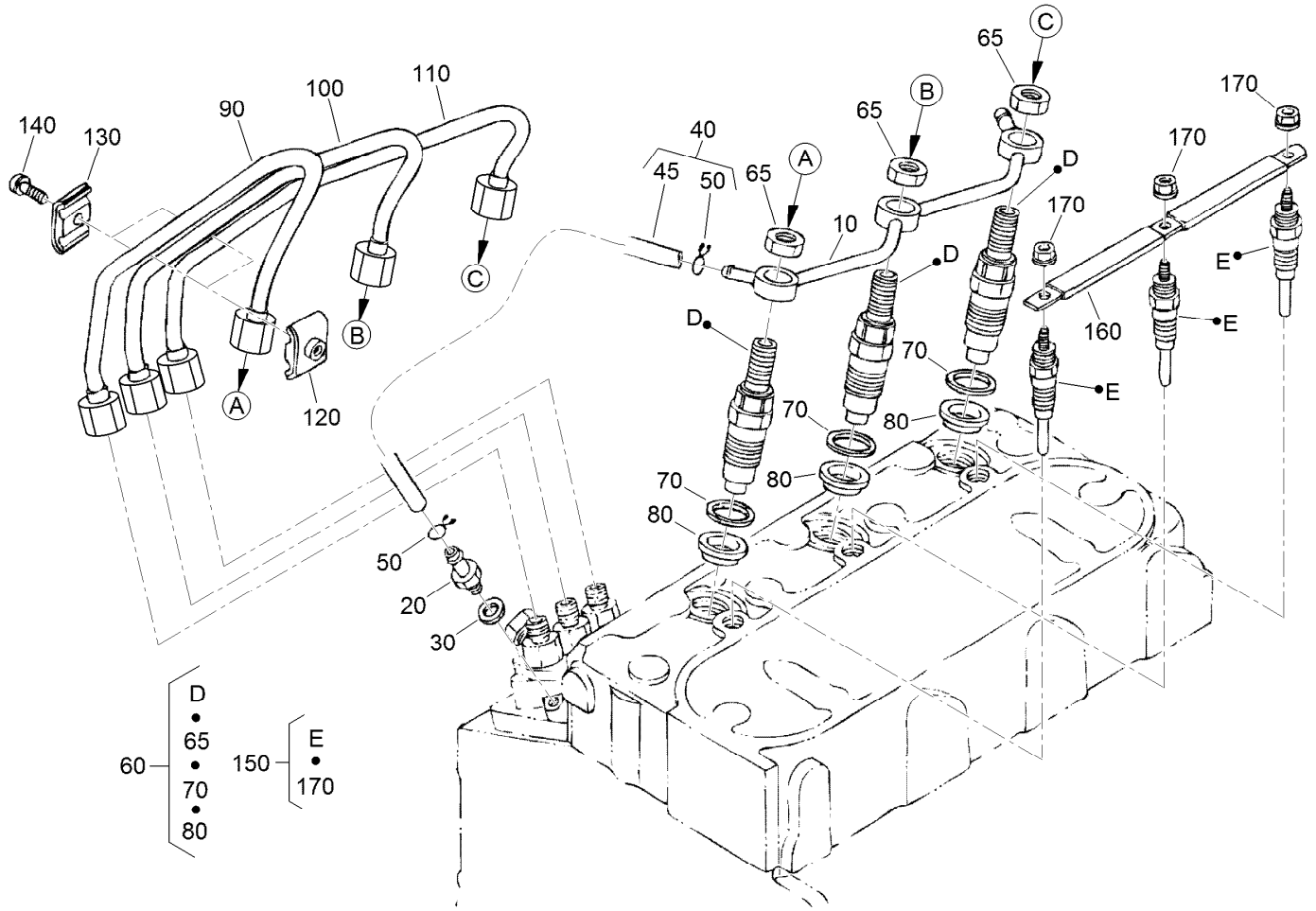

Nozzle Holder and Glow Plug Assembly

Ref.	Part Number	Qty.	Description
10	98-9620	1	Overflow Pipe ASM
20	98-9431	1	Screw-Bleeder, Air
30	98-7654	1	Gasket
40	98-9420	1	Overflow Pipe ASM
45	112-0182	1	Pipe-Overflow
50	98-7671	2	Clip-Pipe
60	130-1410	3	Nozzle Holder Kit
65	121-2411	3	Nut
70	98-7676	3	Gasket
80	98-7677	3	Seal-Heat

Ref.	Part Number	Qty.	Description
90	98-9653	1	Pipe-Injection
100	98-9654	1	Pipe-Injection
110	98-9655	1	Pipe-Injection
120	98-7682	2	Clamp-Pipe
130	98-7683	2	Clamp-Pipe
140	98-7684	2	Screw (W/Washer)
150	130-1411	3	Plug-Glow
160	98-9631	1	Cord-Plug, Glow
170	99-8377	3	Nut-Flange

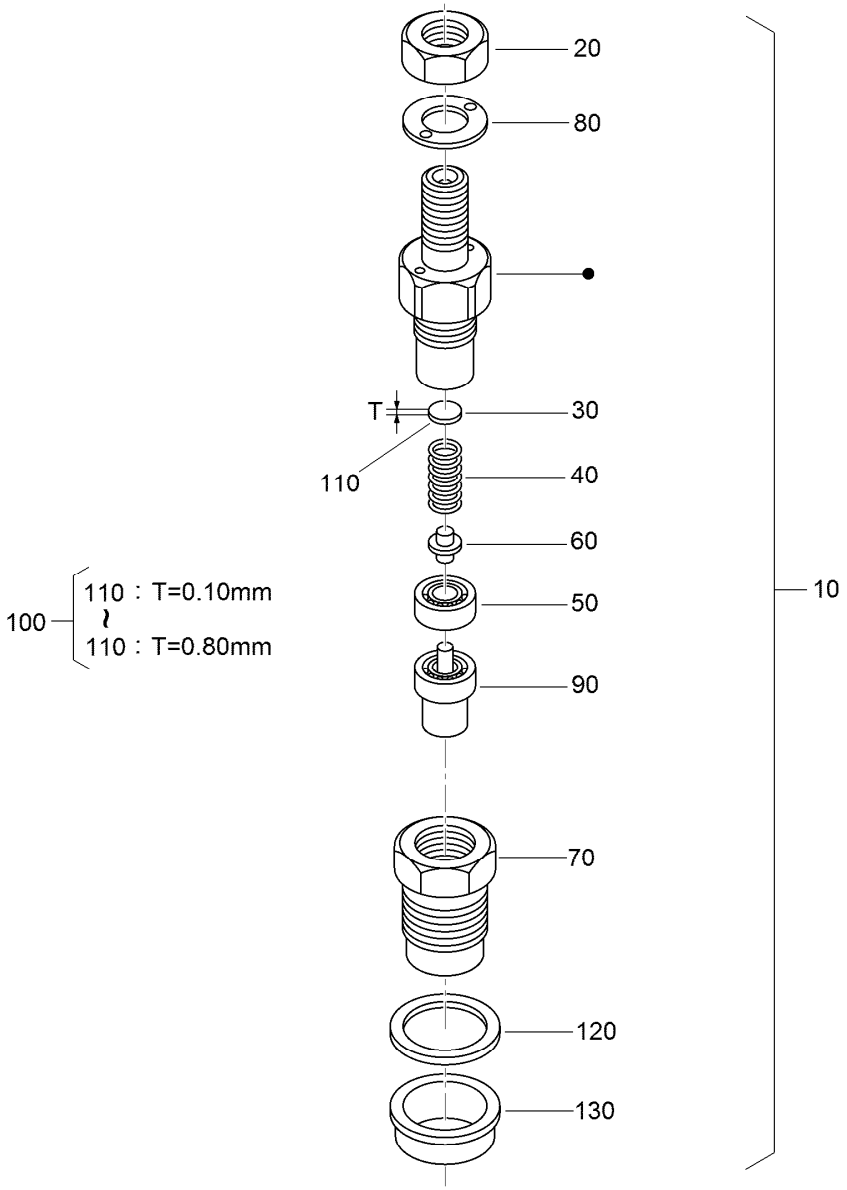

Nozzle Holder Assembly

Ref.	Part Number	Qty.	Description
10	130-1410	3	Nozzle Holder Kit
20	121-2411	3	Nut
30	99-8302	3	Washer-Adjusting
40	99-8303	3	Spring-Nozzle
50	99-8304	3	Spacer-Distance
60	99-8305	3	Rod-Push
70	99-8306	3	Nut-Nozzle
80	99-8307	3	Washer-Plain
90	115-3020	3	Piece-Nozzle
100	99-8309	3	Adjusting Washer ASM
100	99-8317	3	Washer-Adjust (0.56Mm)

Ref.	Part Number	Qty.	Description
110	99-8310	3	Washer-Adjust (0.10Mm)
110	99-8311	3	Washer-Adjust (0.20Mm)
110	99-8312	3	Washer-Adjust (0.30Mm)
110	99-8313	3	Washer-Adjust (0.40Mm)
110	99-8314	3	Washer-Adjust (0.50Mm)
110	99-8315	3	Washer-Adjust (0.52Mm)
110	99-8316	3	Washer-Adjust (0.54Mm)
110	99-8318	3	Washer-Adjust (0.58Mm)
110	99-8319	3	Washer-Adjust (0.80Mm)
120	98-7676	3	Gasket
130	98-7677	3	Seal-Heat

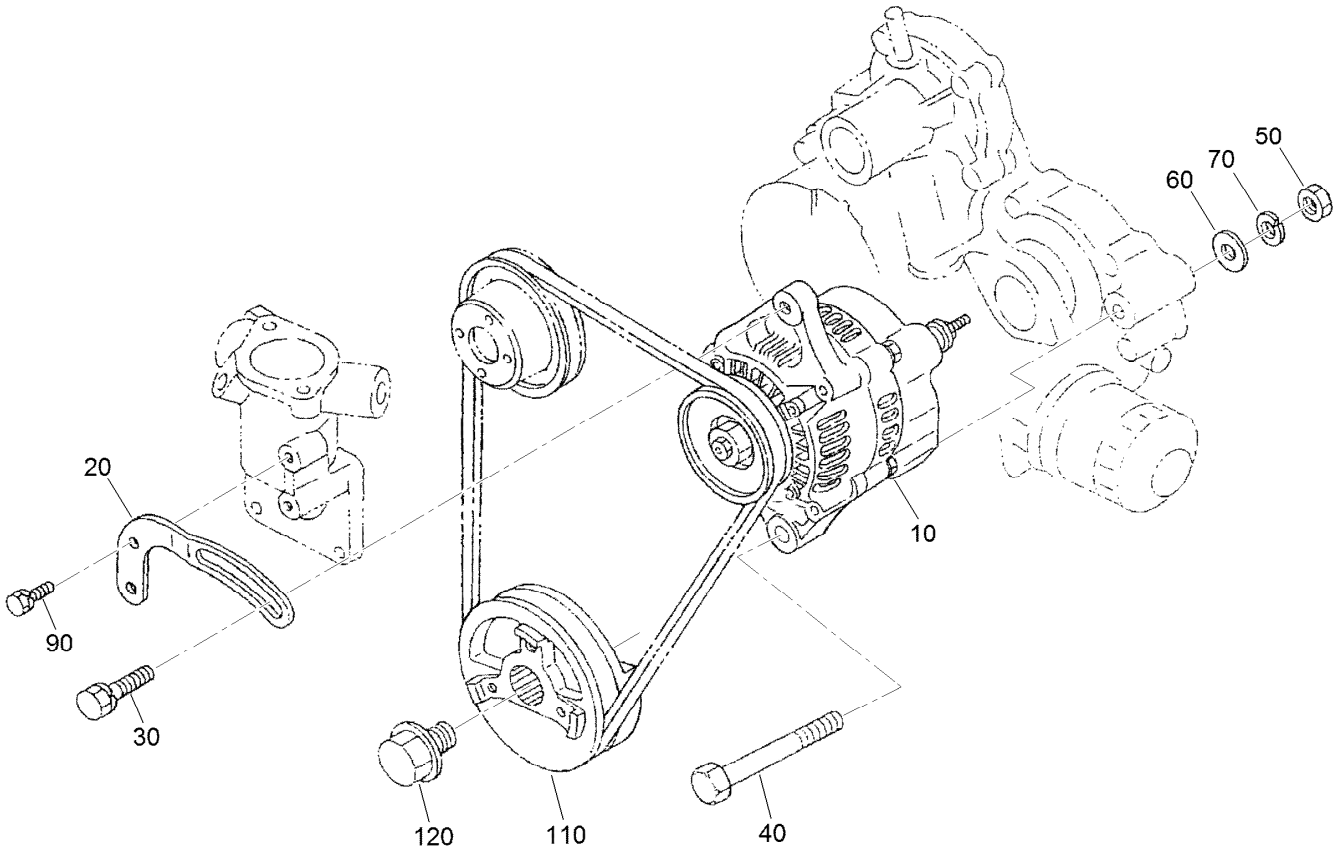

Alternator and Pulley Assembly

Ref.	*Part Number*	*Qty.*	*Description*
10	98-9474	1	Alternator ASM
20	112-7047	1	Stay-Dynamo
30	108-7088	1	Bolt
40	98-9360	1	Bolt
50	98-7737	1	Nut
60	98-9366	1	Washer-Plain
70	98-7738	1	Washer-Spring
90	98-7692	1	Bolt
110	98-9473	1	Pulley-Drive, Fan
120	98-9585	1	Bolt

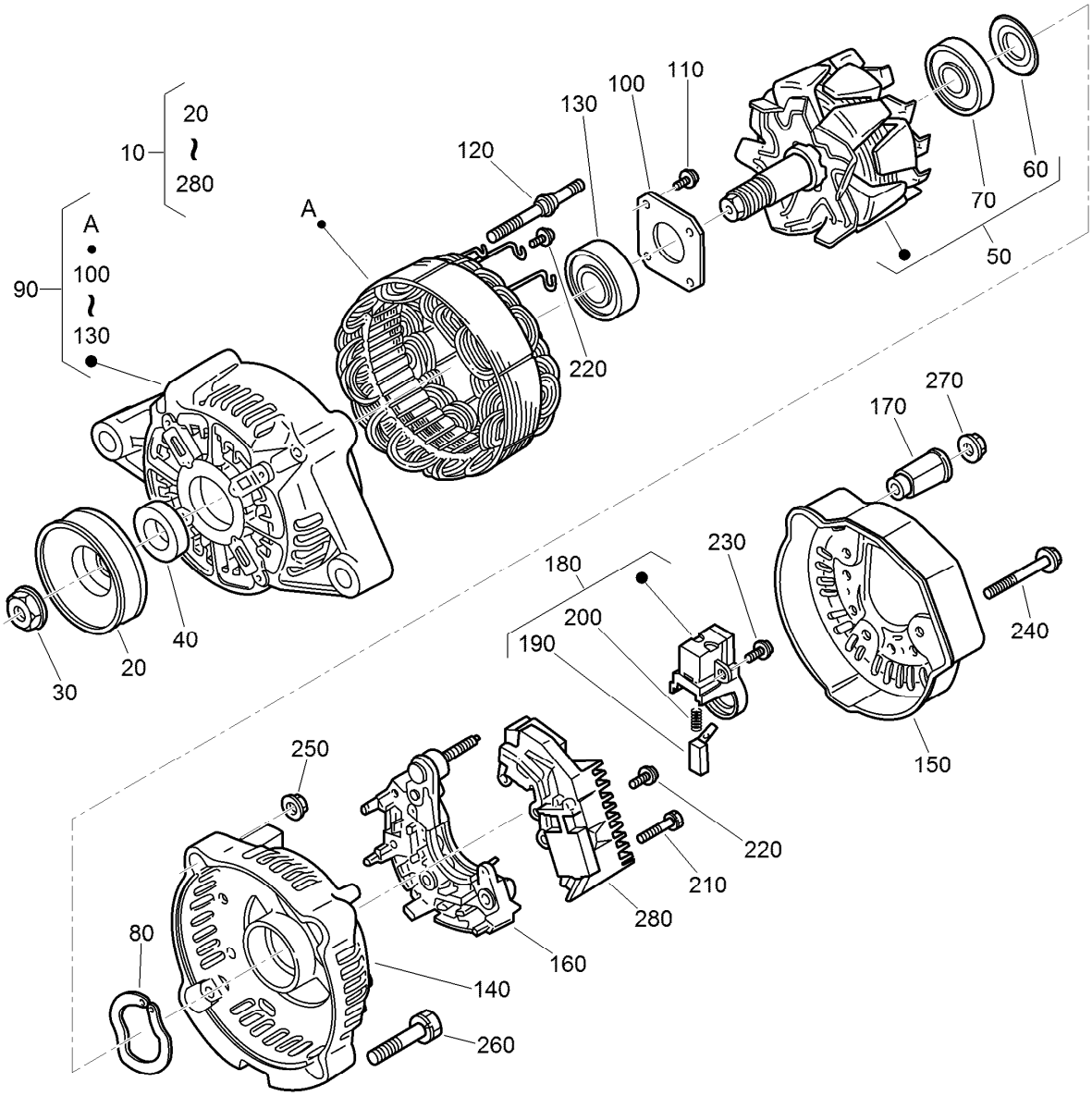

Alternator Components Assembly

Ref.	Part Number	Qty.	Description
10	98-9474	1	Alternator ASM
20	98-9453	1	Pulley-Dynamo
30	98-7708	1	Nut
40	98-7709	1	Collar
50	107-0136	1	Rotor ASM
60	98-7711	1	Cover-Bearing
70	107-0138	1	Bearing-Ball
80	98-7713	1	Washer-Thrust
90	107-0139	1	Drive End Frame ASM
100	98-7715	1	Plate-Retainer
110	98-7716	4	Screw-Head, Round
120	98-7717	2	Bolt-Through
130	107-0137	1	Bearing-Ball
140	107-9087	1	Frame-End

Ref.	Part Number	Qty.	Description
150	107-0140	1	Cover-End
160	127-1612	1	Rectifier ASM
170	98-7722	1	Bushing-Insulation
180	107-0141	1	Brush Holder ASM
190	98-7724	2	Brush
200	98-7725	2	Spring-Brush
210	98-7726	2	Screw-Head, Round
220	98-7727	6	Screw-Head, Round
230	98-7728	1	Screw-Head, Round
240	98-7729	3	Bolt
250	98-7730	2	Nut
260	98-7731	2	Bolt
270	98-7732	1	Nut
280	110-3799	1	Regulator ASM

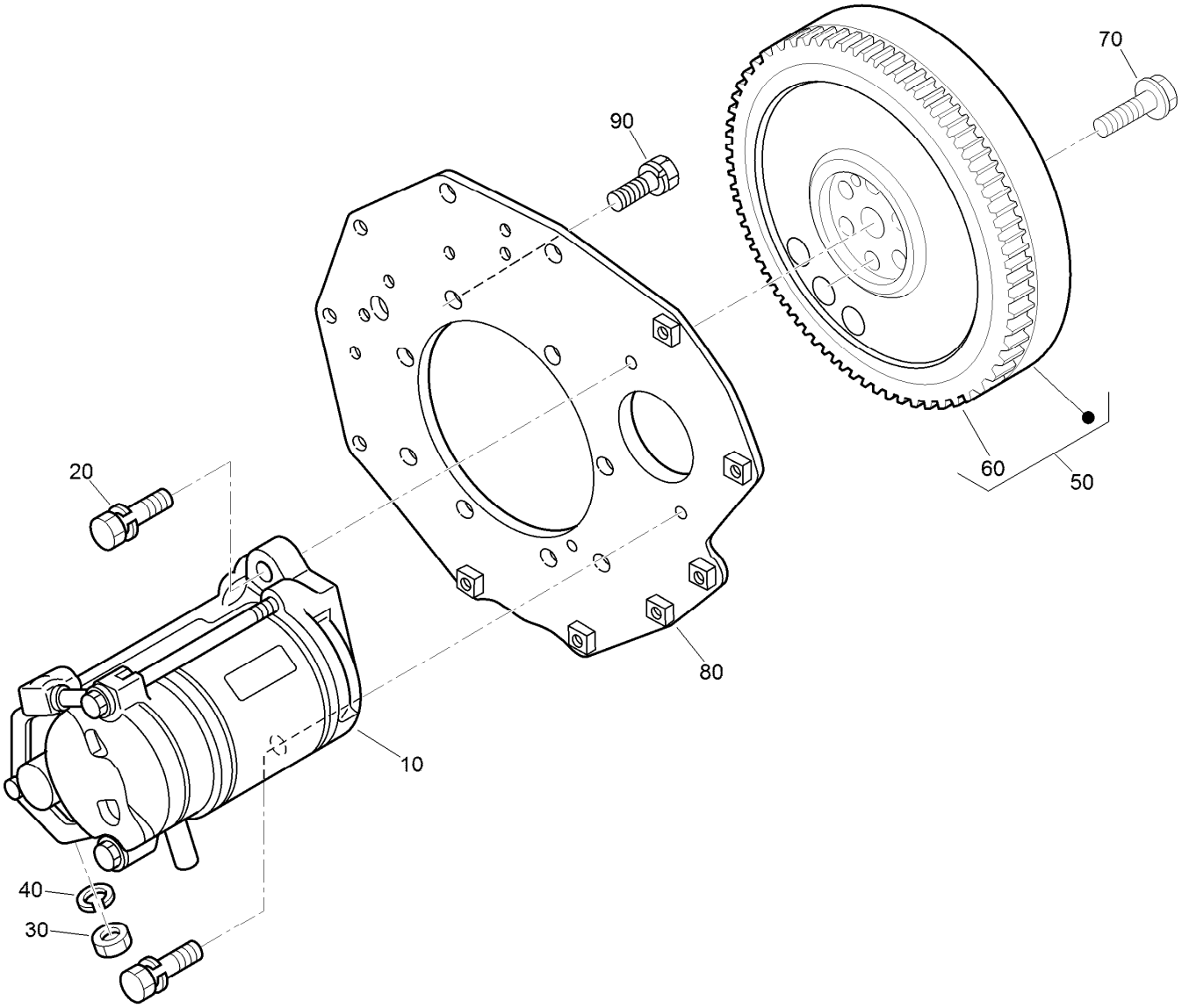

Starter and Flywheel Assembly

Ref.	Part Number	Qty.	Description
10	98-9705	1	Starter ASM
20	98-7697	2	Bolt
30	98-7739	1	Nut
40	105-2893	1	Washer-Spring
50	105-3784	1	Flywheel ASM
60	115-3015	1	Gear-Ring
70	98-9537	6	Bolt-Flywheel
80	98-9486	1	Plate-End, Rear
90	98-9392	8	Bolt

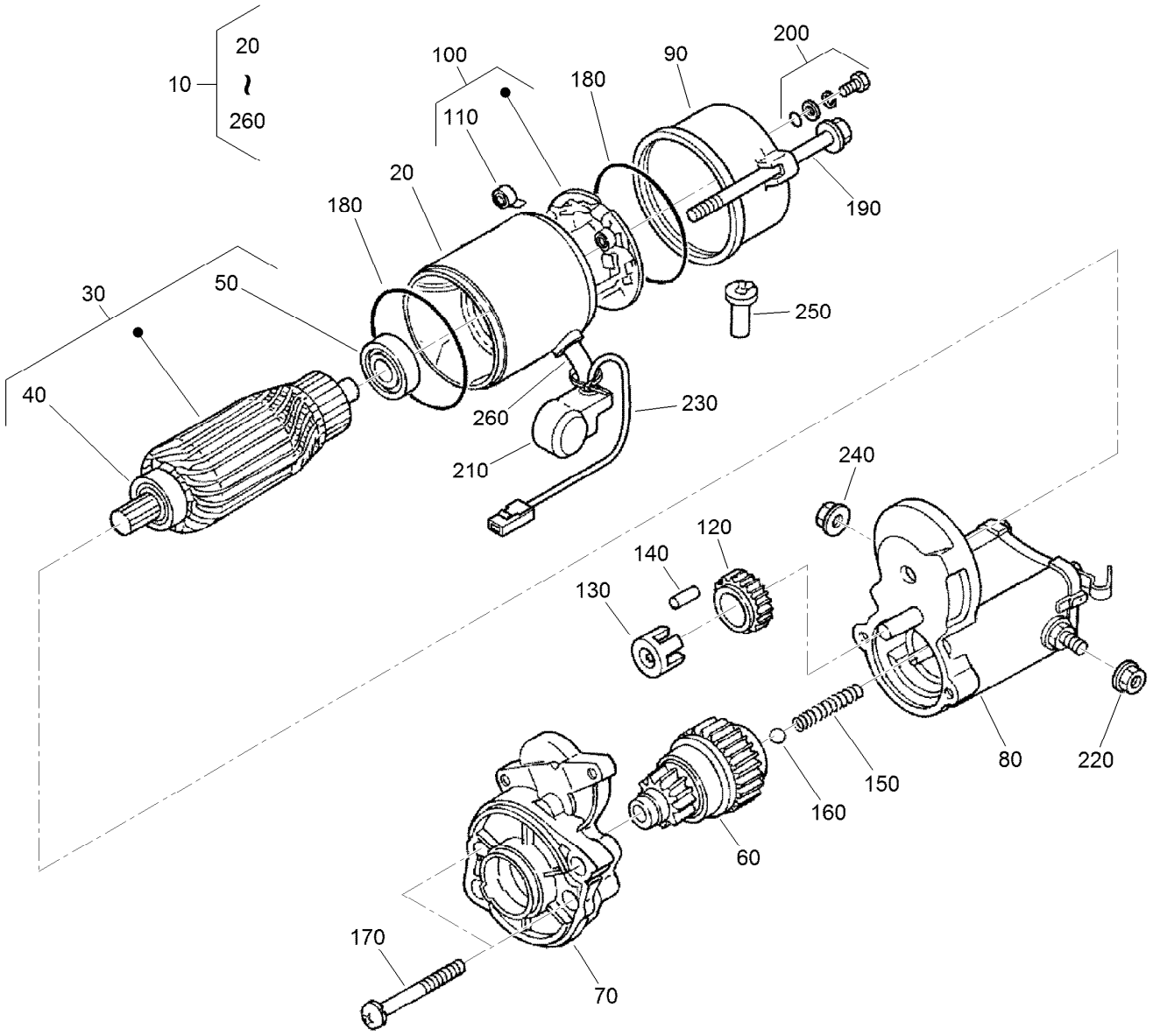

Starter Component Assembly

Ref.	Part Number	Qty.	Description
10	98-9705	1	Starter ASM
20	104-8608	1	Yoke ASM
30	98-7742	1	Armature ASM
40	98-7744	1	Bearing
50	98-7743	1	Bearing
60	99-8373	1	Clutch-Running, Over
70	99-8374	1	Frame-End, Drive
80	105-3746	1	Magnetic Switch ASM
90	98-7748	1	Frame-End
100	98-7749	1	Brush Holder ASM
110	98-7750	4	Spring-Brush
120	98-7751	1	Gear
130	98-7752	1	Retainer

Ref.	Part Number	Qty.	Description
140	98-7753	5	Roller
150	98-7754	1	Spring
160	98-7755	1	Ball
170	98-7756	2	Bolt
180	98-7757	2	O-Ring
190	100-9240	2	Bolt
200	98-7758	2	Bolt ASM
210	99-8375	1	Cover
220	99-8371	1	Nut-Hex
230	98-9711	1	Cord-Solenoid, Stop
240	99-8376	1	Nut-Hex
250	98-7759	1	Pipe-Drain
260	98-9712	1	Band-Cover

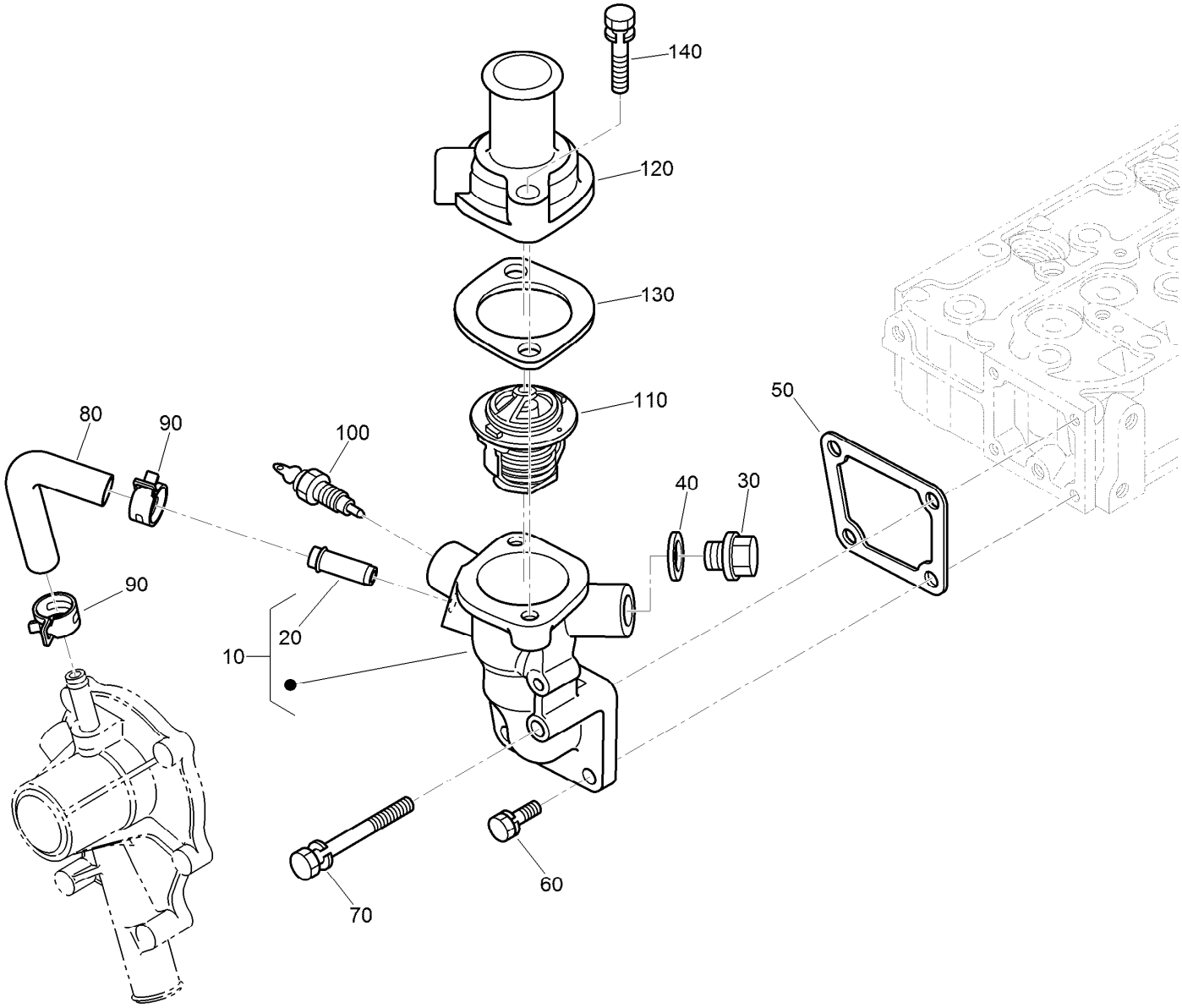

Water Flange and Thermostat Assembly

Ref.	Part Number	Qty.	Description
10	98-9713	1	Water Flange ASM
20	98-9580	1	Pipe-Return, Water
30	105-3747	1	Plug
40	99-3583	1	Gasket
50	98-9638	1	Gasket-Flange, Water
60	98-7692	3	Bolt
70	98-9356	1	Bolt
80	98-9578	1	Pipe-Return, Water
90	125-9078	2	Clamp-Hose
100	98-9719	1	Thermoswitch
110	98-7778	1	Thermostat ASM
120	98-9471	1	Cover-Thermostat
130	105-3748	1	Gasket-Thermostat
140	98-7777	2	Bolt

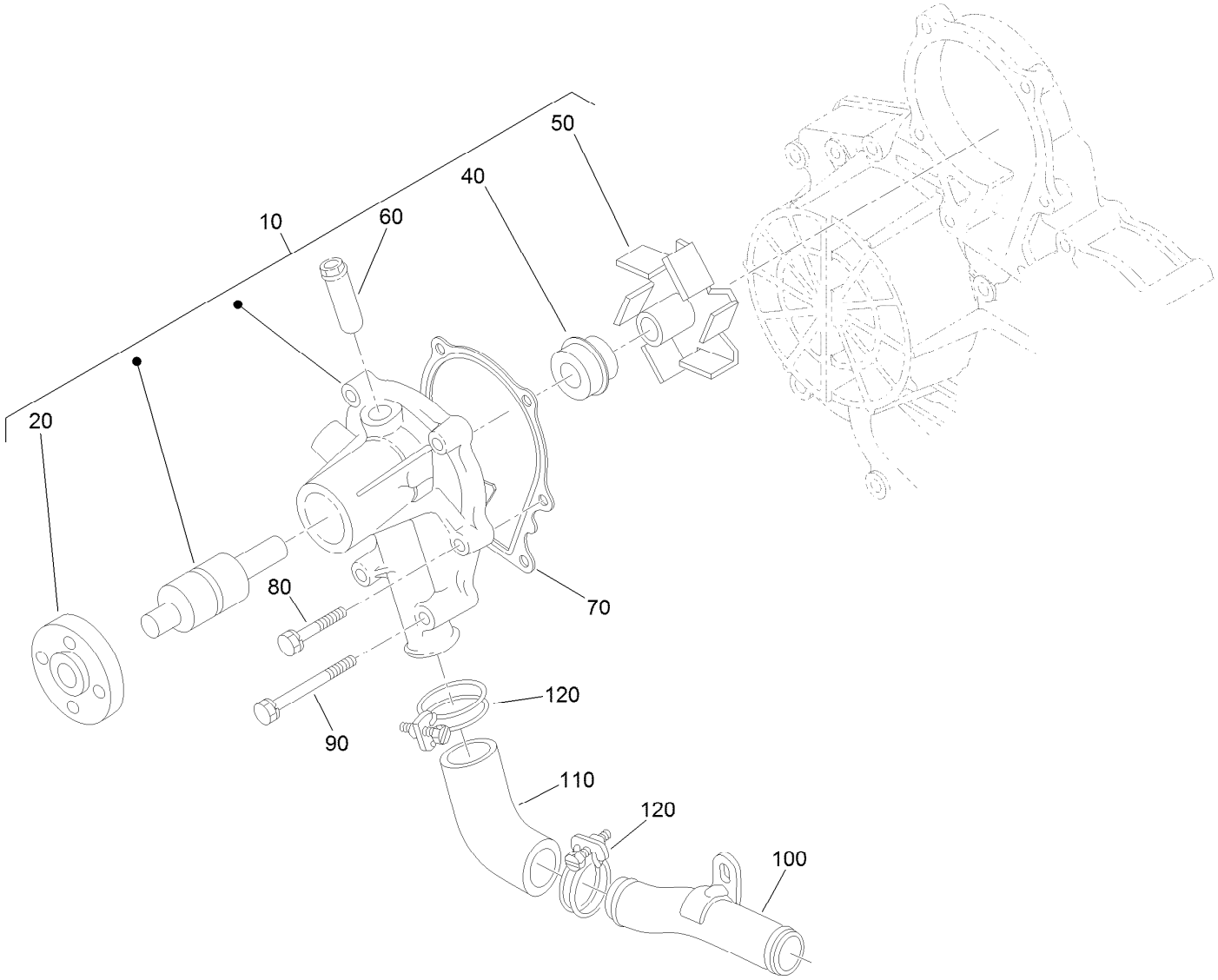

Water Pump Assembly

Ref.	Part Number	Qty.	Description
10	107-9089	1	Water Pump ASM
20	99-3516	1	Flange-Pump, Water
40	105-3750	1	Mechanical Seal ASM
50	112-7017	1	Impeller-Pump, Water
60	100-1932	1	Pipe-Return, Water
70	99-3454	1	Gasket-Pump, Water
80	98-9353	4	Bolt
90	107-9090	2	Bolt
100	98-9716	1	Pipe-Water
110	107-9091	1	Pipe-Water
120	127-0439	2	Clamp-Hose

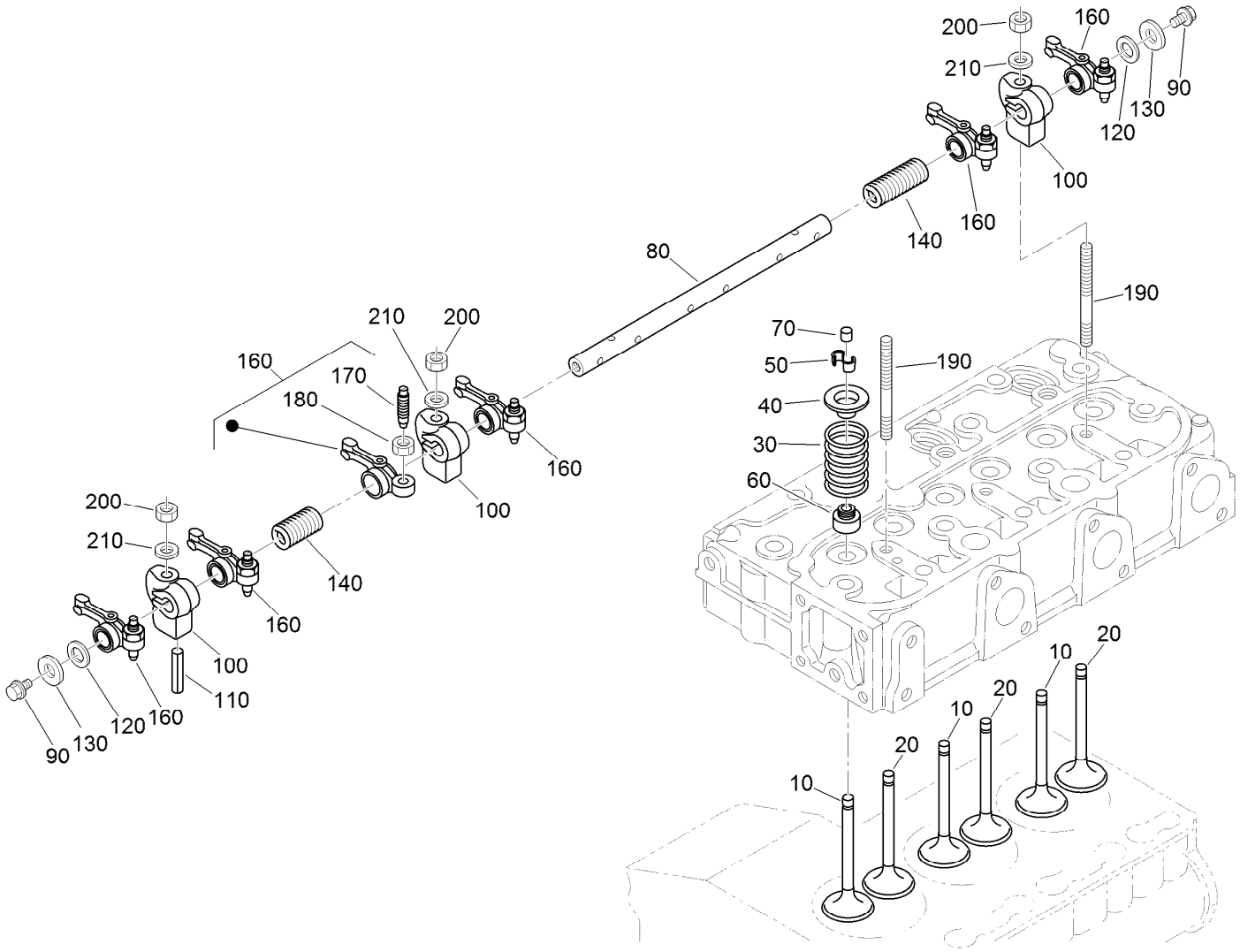

Valve and Rocker Arm Assembly

Ref.	Part Number	Qty.	Description
10	112-7018	3	Valve-Inlet
20	120-2564	3	Valve-Exhaust
30	98-9648	6	Spring-Valve
40	107-9092	6	Retainer-Spring
50	117-7572	6	Collet-Spring, Valve
60	99-8385	6	Seal-Stem, Valve
70	98-9497	6	Cap-Valve
80	130-1248	1	Shaft-Arm, Rocker
90	99-8363	2	Bolt-Flange
100	98-9505	3	Bracket-Arm, Rocker

Ref.	Part Number	Qty.	Description
110	105-3758	1	Pin-Spring
120	98-9507	2	Washer-Shaft, Rocker Arm
130	110-3832	2	Washer-Plain
140	98-9504	2	Spring-Arm, Rocker
160	112-7020	6	Rocker Arm ASM
170	98-9502	6	Screw-Adjusting
180	98-9503	6	Nut
190	98-9506	3	Stud
200	98-9393	3	Nut
210	98-9385	3	Washer-Flat

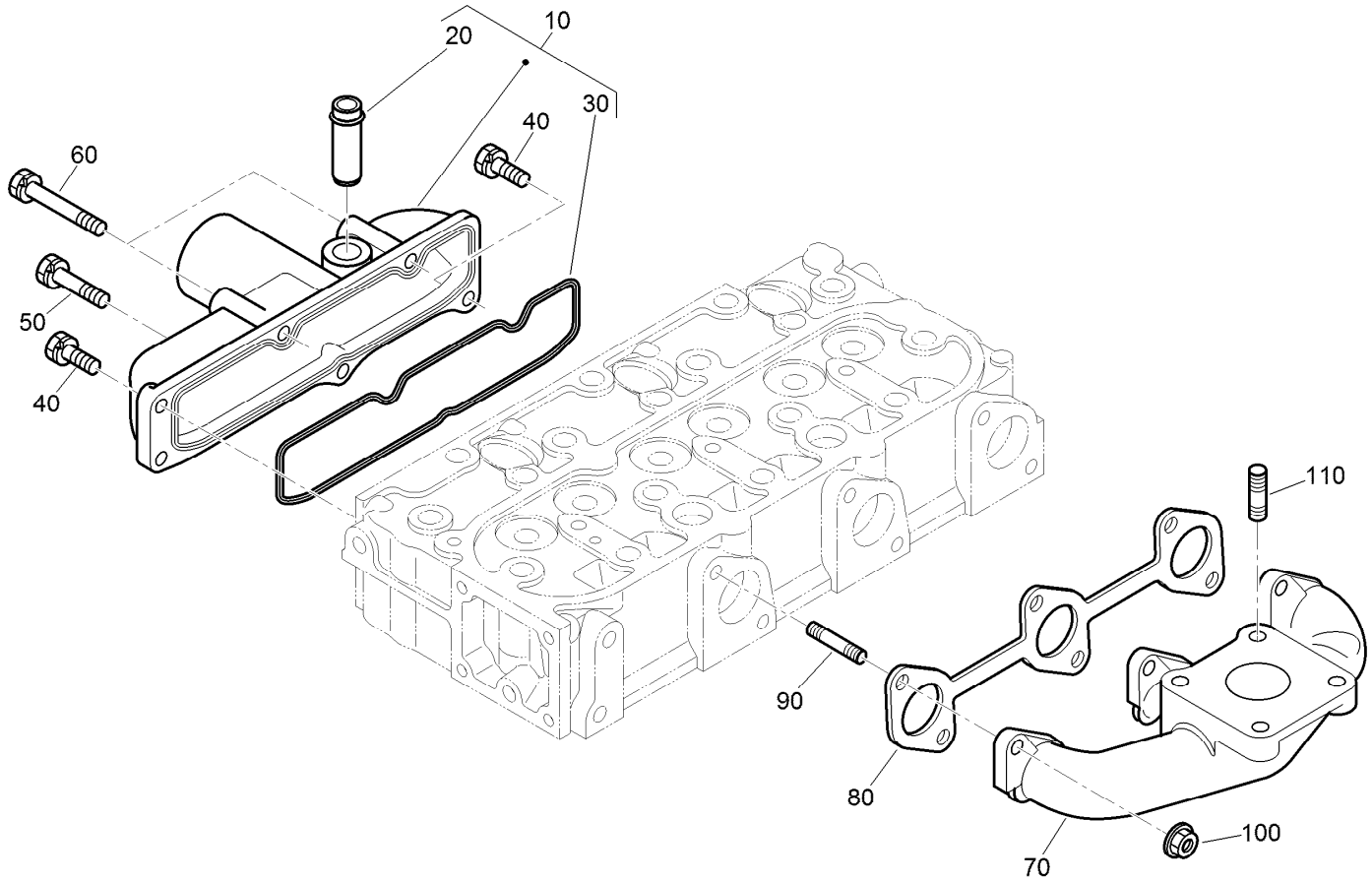

Inlet and Exhaust Manifold Assembly

Ref.	*Part Number*	*Qty.*	*Description*
10	108-6577	1	Inlet Manifold ASM
20	98-9492	1	Joint-Pipe, Breather
30	98-9609	1	Gasket-Manifold, Inlet
40	127-0403	3	Bolt-Flange
50	98-9353	1	Bolt
60	125-9063	2	Bolt-Sems
70	107-9093	1	Manifold-Exhaust
80	99-8327	1	Gasket-Manifold, Exhaust
90	98-9588	6	Stud
100	98-9665	6	Nut
110	98-7769	4	Stud

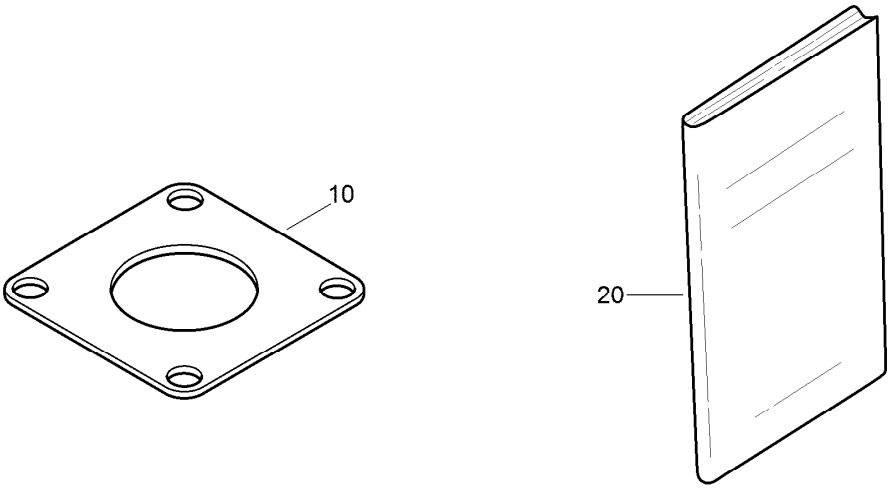

Miscellaneous Engine Parts

Ref.	*Part Number*	*Qty.*	*Description*
10	99-8343	1	Gasket-Muffler
20	130-1543	1	Manual-Operator

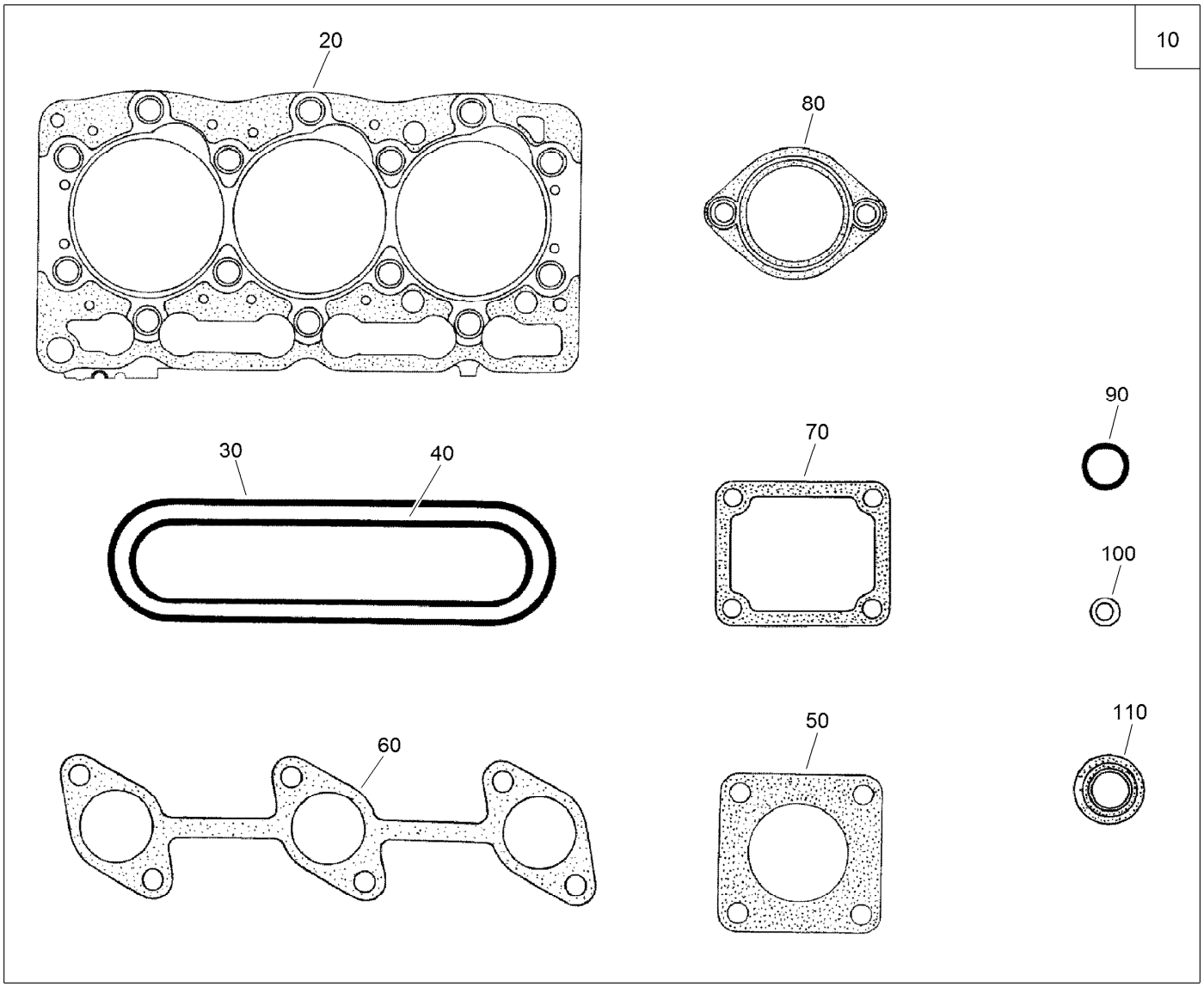

Upper Engine Gasket Kit

Ref.	*Part Number*	*Qty.*	*Description*
10	130-1363	1	Upper Gasket Kit
20	108-6573	1	Gasket-Head, Cylinder
30	130-1249	1	Gasket-Head Cover
40	98-9609	1	Gasket-Manifold, Inlet
50	99-8343	1	Gasket-Muffler
60	99-8327	1	Gasket-Manifold, Exhaust
70	98-9638	1	Gasket-Flange, Water
80	105-3748	1	Gasket-Thermostat
90	99-3446	2	O-Ring
100	98-9454	3	Gasket
110	99-8385	6	Seal-Stem, Valve

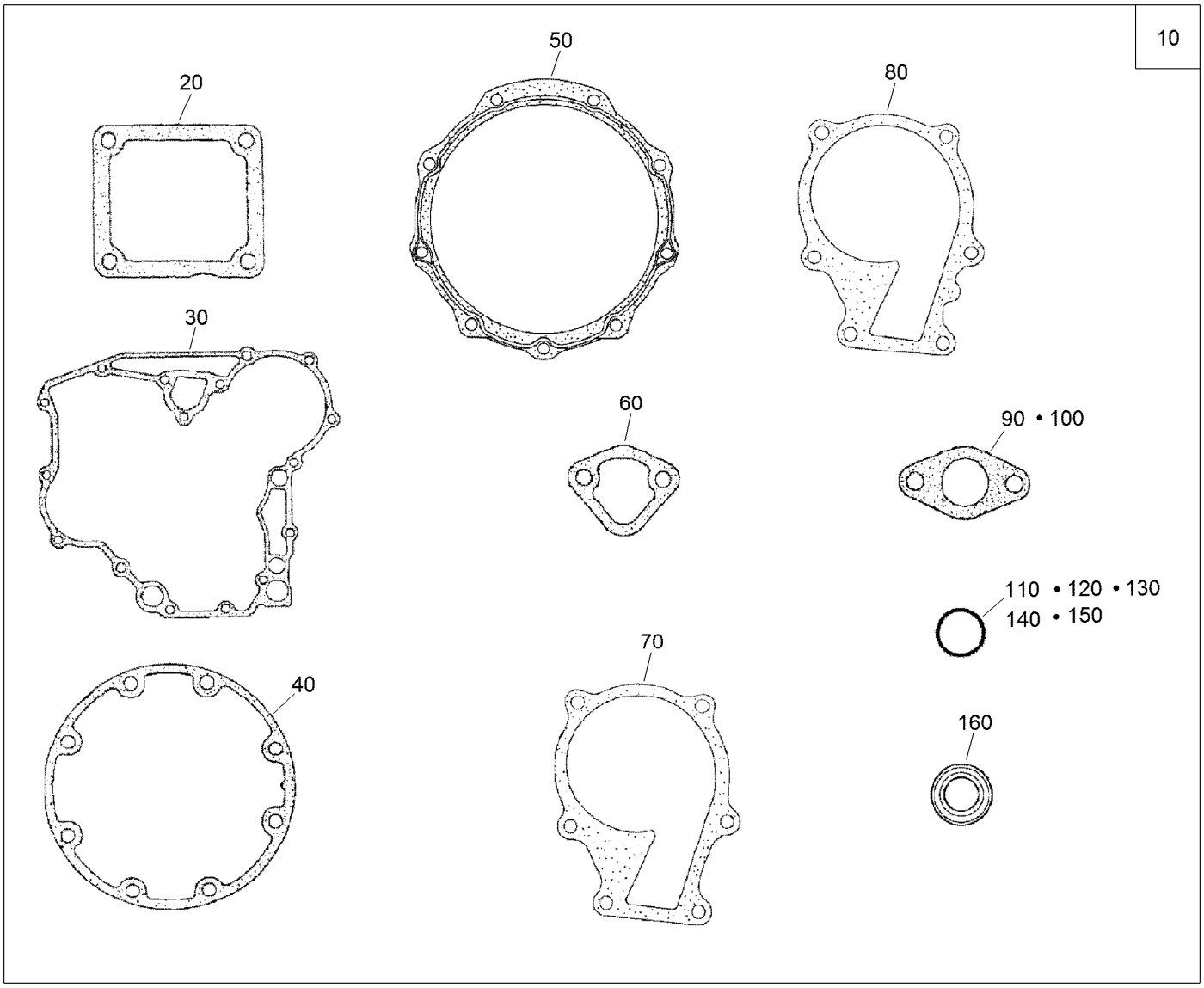

Lower Engine Gasket Kit

Ref.	Part Number	Qty.	Description
10	130-1364	1	Lower Gasket Kit
20	98-9637	1	Gasket
30	98-9633	1	Gasket-Case, Gear
40	127-0440	1	Gasket-Case, Bearing
50	112-7037	1	Gasket-Cover, Case
60	117-7562	1	Gasket-Pump, Fuel
70	98-9632	1	Gasket-Pump, Water
80	99-3454	1	Gasket-Pump, Water

Ref.	Part Number	Qty.	Description
90	98-9682	1	Gasket
100	98-9683	1	Gasket-Cover, Solenoid
110	105-3781	2	O-Ring
120	105-3777	2	O-Ring
130	105-3783	1	O-Ring
140	105-3776	1	O-Ring
150	105-3788	1	O-Ring
160	98-7601	1	Seal-Oil

Attachments and Accessories

For 30345 Groundsmaster 3280-D 4-Wheel Drive Traction Unit

Product Name	Model/Part
Premium Engine Oil, 10w30 (55 Gallon Drum)	108-1179
Premium Engine Oil, 10w30 (5 Gallon Pail)	108-1180
Premium Engine Oil, 15w40 (55 Gallon Drum)	108-1181
Premium Engine Oil, 15w40 (5 Gallon Pail)	108-1182
Premium Transmission/Hydraulic Tractor Fluid (55 Gallon Drum)	108-1183
Premium Transmission/Hydraulic Tractor Fluid (5 Gallon Pail)	108-1184
Premium All Season Gear Lube (5 Gallon Pail)	108-1187
Premium All Purpose Grease (Tube)	108-1190
Premium All Season Gear Lube (Quart)	108-1590
65 lb. Weight Kit	108-9682
Armrest Adapter Kit	108-9687
Wheel Weight Kit	11-0440
Implement Flow Control Kit	110-5699
Blower Drive and Mounting Kit	110-8539
Attachment Frame Kit	110-8540
Rear Axle Skid Plate Kit	110-9694
5 Inch Air Cleaner Safety Element	114-4057
Snowthrower Drive and Mounting Kit	114-4140
V-Plow Mounting Kit	115-4917
Mounting Kit (for Model 30823)	115-4929
Model 2670 Debris Blower Mounting Kit (2XX)	115-4932
Model 2670 Debris Blower Mounting Kit (3XX)	115-4935
Wheel	119-2863
Wheel and Tire Assembly	119-2864
Auxiliary Valve Kit	120-6590
Auxiliary Valve Kit	120-6640
Tire	231-95
Rear Weight Kit	24-5780
400-Hour Filter Maintenance Kit	30051
Cab Kit	30298
Mechanical Seat Suspension Kit	30312
Pneumatic Seat Suspension Kit	30313
15 Cubic Foot Bagger Kit	30356
60 Inch Blower Kit	30357
Bimini Sunshade for 2-Post Roll-Over Protection System	30358
Hardtop Sunshade	30359
60 Inch Side Discharge Mower	30366
72 Inch Side Discharge Mower	30368
Auxiliary Power Unit	30382
Standard Seat Kit	30398
62 Inch Base Mower	30403
72 Inch Base Mower	30404
52 Inch Blower Kit	30502
62 Inch Blower Kit	30506
62 Inch Side Discharge Deck	30551
52 Inch Side Discharge Mower	30555

Attachments and Accessories (continued)

Arm Rest Kit..... 30707
48 Inch V-Plow..... 30750
Debris Blower 30823
CE Kit 31204
Tire 69-9880
Spark Arrestor Screen 75-6880
Weight-Wheel 77-6700
Tire Chains 82531
Drive Shaft Kit..... 92-9075

Notes:

TORO®

Count on it.