Form No. 3405-834 Rev A

TORO®

Count on it.

Operator's Manual

Z Master® 8000 Series Riding Mower

with 122cm Direct-Collect Cutting Unit

Model No. 74311TE—Serial No. 316000001 and Up

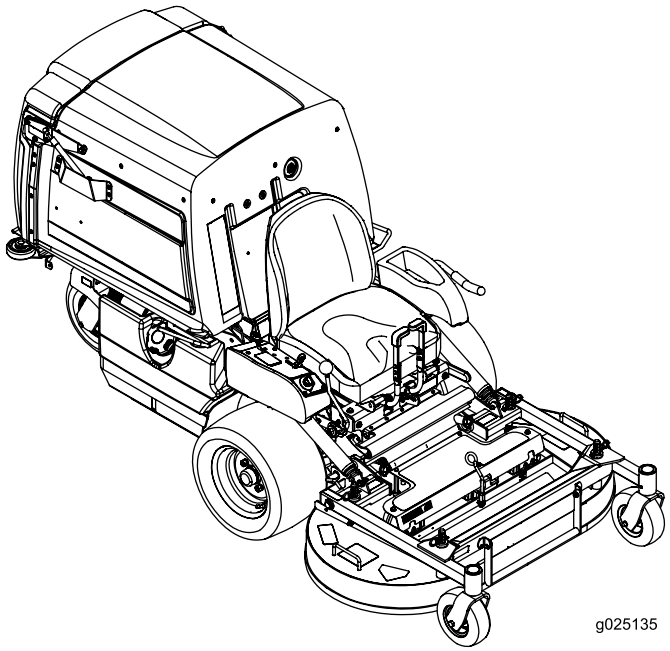

g025135

Register at www.Toro.com.
Original Instructions (EN)

CE

3405-834 A

This product complies with all relevant European directives; for details, please see the separate product specific Declaration of Conformity (DOC) sheet.

This spark ignition system complies with Canadian ICES-002

⚠ WARNING

Removing standard original equipment parts and accessories may alter the warranty, traction, and safety of the machine. Failure to use original Toro parts could cause serious injury or death. Making unauthorized changes to the engine, fuel or venting system, may violate regulations.

Replace all parts including, but not limited to, tires, belts, blades, and fuel system components with original Toro parts.

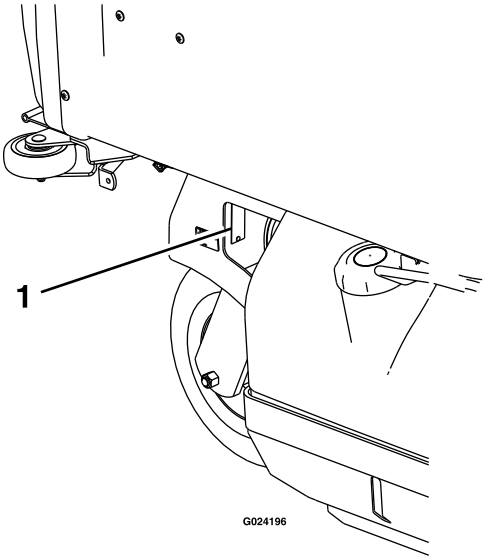

Figure 1

1. Model and serial number location

Model No. _____

Serial No. _____

Introduction

This rotary-blade, riding lawn mower is intended to be used by residential homeowners or professional, hired operators. It is designed primarily for cutting grass on well-maintained lawns on residential or commercial properties. It is not designed for cutting brush or for agricultural uses.

Read this information carefully to learn how to operate and maintain your product properly and to avoid injury and product damage. You are responsible for operating the product properly and safely.

You may contact Toro directly at www.Toro.com for product and accessory information, help finding a dealer, or to register your product.

Whenever you need service, genuine Toro parts, or additional information, contact an Authorized Service Dealer or Toro Customer Service and have the model and serial numbers of your product ready. Figure 1 identifies the location of the model and serial numbers on the product. Write the numbers in the space provided.

This manual identifies potential hazards and has safety messages identified by the safety-alert symbol (Figure 2), which signals a hazard that may cause serious injury or death if you do not follow the recommended precautions.



Figure 2

1. Safety-alert symbol

This manual uses 2 words to highlight information. **Important** calls attention to special mechanical information and **Note** emphasizes general information worthy of special attention.

© 2016—The Toro® Company
8111 Lyndale Avenue South
Bloomington, MN 55420

Contact us at www.Toro.com.
Printed in the USA
All Rights Reserved

Contents

Safety 4
Safe Operating Practices 4
Toro Riding Mower Safety 5
Sound Pressure 6
Sound Power 6
Vibration Level 6
Slope Indicator 7
Safety and Instructional Decals 8
Product Overview 14
Controls 14
Specifications 15
Operation 16
Adding Fuel 16
Checking the Engine-Oil Level 17
Breaking in a New Machine 17
Think Safety First 17
Operating the Parking Brake 18
Operating the Throttle 18
Operating the Ignition Switch 18
Operating the PTO Engagement Lever 19
Starting and Shutting Off the Engine 19
The Safety Interlock System 21
Driving Forward or Backward 21
Stopping the Machine 22
Unlatching the Seat 22
Raising the Mower Deck into Service Position 22
Lowering the Mower Deck to the Operating Position 23
Adjusting the Fill Reduction System (FRS) Baffles 24
Adjusting the Height of Cut 25
Emptying the Hopper 25
Clearing the Hopper Screen 25
Using the Drive-Wheel-Release Valves 25
Transporting the Machine 26
Loading the Machine 27
Operating Tips 28
Maintenance 29
Recommended Maintenance Schedule(s) 29
Lubrication 30
Lubricating the Machine 30
Engine Maintenance 33
Servicing the Air Cleaner 33
Servicing the Engine Oil 35
Servicing the Spark Plugs 37
Fuel System Maintenance 38
Replacing the Fuel Filter 38
Servicing the Fuel Tank 39
Electrical System Maintenance 39
Servicing the Battery 39
Servicing the Fuses 41
Adjusting the Safety Switches 41
Jump Starting the Machine 41
Drive System Maintenance 42
Adjusting the Tracking 42
Checking the Tire Pressure 42
Checking the Wheel Lug Nuts 42
Checking the Wheel Hub Nuts 42
Adjusting the Caster Pivot Bearings 42
Cooling System Maintenance 43
Cleaning the Engine Screen and Engine-Oil Cooler 43
Servicing the Engine-Oil Cooler 43
Cleaning the Engine Cooling Fins and Shrouds 43
Check and Clean the Hydraulic Pumps 44
Brake Maintenance 44
Adjusting the Parking Brake 44
Belt Maintenance 46
Inspecting the Belts 46
Replacing the PTO Belts 46
Replacing the Pump Drive Belt 46
Adjusting the Belt Guides 47
Controls System Maintenance 47
Adjusting the Reverse-Stop Rod 47
Adjusting the Speed-Control Lever Tension 48
Adjusting the Speed-Control Linkage 48
Aligning the PTO Drive Pulley 49
Aligning the Pump-Drive Pulley 49
Adjusting the PTO Brake Spring 50
Adjusting the Hopper Door 50
Hydraulic System Maintenance 51
Servicing the Hydraulic System 51
Mower Deck Maintenance 52
Leveling the Mower Deck 52
Servicing the Cutting Blades 53
Removing the Mower Deck 55
Installing the Mower Deck 56
Adjusting the Locking-Pin Stop on the Mower Deck 57
Cleaning 57
Cleaning under the Mower 57
Cleaning Debris from the Machine 57
Disposing of Waste 57
Storage 58
Cleaning and Storage 58
Troubleshooting 59
Schematics 61

Safety

This machine has been designed in accordance with EN ISO 5395:2013.

Improper use or maintenance by the operator or owner can result in injury. To reduce the potential for injury, comply with these safety instructions and always pay attention to the safety alert symbol, which means **Caution, Warning,** or **Danger**—personal safety instruction. Failure to comply with the instruction may result in personal injury or death.

Safe Operating Practices

This product is capable of amputating hands and feet and throwing objects. Always follow all safety instructions to avoid serious injury or death.

Training

- Read the instructions carefully. Be familiar with the controls and the proper use of the equipment.
- Never allow children or people unfamiliar with these instructions to use the lawn mower. Local regulations can restrict the age of the operator.
- Never mow while people, especially children, or pets are nearby.
- Keep in mind that the operator or user is responsible for accidents or hazards occurring to other people or their property.
- Do not carry passengers.
- All drivers should seek and obtain professional and practical instruction. Such instruction should emphasize:
  - the need for care and concentration when working with ride-on machines;
  - control of a ride-on machine sliding on a slope will not be regained by the application of the control levers. The main reasons for loss of control are:
    - ◊ insufficient wheel grip, especially on wet grass;
    - ◊ being driven too fast;
    - ◊ inadequate braking;
    - ◊ the type of machine is unsuitable for its task;
    - ◊ lack of awareness of the effect of ground conditions, especially slopes;
    - ◊ incorrect hitching and load distribution.

Preparation

- While mowing, always wear substantial, slip-resistant footwear and long trousers. Tie back long hair. Do not wear jewelry.
- Thoroughly inspect the area where you will use the equipment and remove all objects which the machine may throw at you.
- **Warning**–Fuel is highly flammable.
  - Store fuel in containers specifically designed for this purpose.
  - Refuel the machine outdoors only and do not smoke while refuelling.
  - Add fuel before starting the engine. Never remove the cap of the fuel tank or add fuel while the engine is running or when the engine is hot.
  - If you spill fuel, do not attempt to start the engine but move the machine away from the area of spillage and avoid creating any source of ignition until the fuel vapors have dissipated.
  - Replace all fuel tanks and container caps securely.
- Replace faulty silencers.
- Before using, always visually inspect to see that the blades, blade bolts, and cutter assembly are not worn or damaged. Replace worn or damaged blades and bolts in sets to preserve balance.
- On multi-bladed machines, take care as rotating one blade can cause other blades to rotate.

Operation

- Lightning can cause severe injury or death. If lightning is seen or thunder is heard in the area, do not operate the machine; seek shelter.
- Be alert, slow down, and use caution when making turns. Look behind and to the side before changing directions.
- Do not operate the engine in a confined space where dangerous carbon monoxide fumes can collect.
- Mow only in daylight or in good artificial light.
- Before attempting to start the engine, disengage all blade-attachment clutches and shift the transmission into neutral.
- Do not use on slopes greater than 15 degrees.
- Remember that there is no such thing as a safe slope. Travel on grass slopes requires particular care. To guard against overturning:
  - do not stop or start suddenly when on a slope;
  - use slow speeds on slopes and during tight turns;
  - stay alert for humps and hollows and other hidden hazards;
- Use care when pulling loads or using heavy equipment.
  - Use only approved drawbar hitch points.
  - Limit loads to those you can safely control.
  - Do not turn sharply. Use care when reversing the machine.
- Watch out for traffic when crossing or near roadways.
- Stop the blades rotating before crossing surfaces other than grass.
- When using any attachments, never direct discharge of material toward bystanders nor allow anyone near the machine while in operation.

- Never operate the machine with damaged guards or without safety protective devices in place.
- Do not change the engine governor settings or overspeed the engine. Operating the engine at excessive speed can increase the hazard of personal injury.
- Before leaving the operator's position:
  - disengage the power takeoff and lower the attachments;
  - change into neutral and set the parking brake;
  - stop the engine and remove the key.
- Disengage drive to attachments, stop the engine, and disconnect the spark plug wire(s) or remove the ignition key
  - before clearing blockages or unclogging the chute;
  - before checking, cleaning, or working on the lawn mower;
  - after striking a foreign object. Inspect the lawn mower for damage and make repairs before starting and operating the equipment; if the machine starts to vibrate abnormally (check immediately).
- Disengage drive to attachments when transporting or not in use.
- Stop the engine and disengage drive to attachment
  - before fuelling;
  - before removing the grass catcher;
  - before adjusting the height unless you can adjust it from the operator's position.
- Reduce the throttle setting during engine run-out and, if the engine is provided with a shutoff valve, turn the fuel off at the conclusion of mowing.

Maintenance and Storage

- Keep all nuts, bolts and screws tight to be sure that the equipment is in safe working condition.
- Never store the equipment with fuel in the tank inside a building, where fumes can reach an open flame or spark.
- Allow the engine to cool before storing the machine in any enclosure.
- To reduce the fire hazard, keep the engine, silencer, battery compartment, and fuel storage area free of grass, leaves, or excessive grease.
- Check the grass catcher frequently for wear or deterioration.
- Replace worn or damaged parts for safety.
- If you must drain the fuel tank, do it outdoors.
- When machine is to be parked, stored or left unattended, lower the cutting means unless you are using a positive mechanical lock.

Toro Riding Mower Safety

The following list contains safety information specific to Toro products or other safety information that you must know that is not included in the CEN standard.

- Engine exhaust contains carbon monoxide, which is an odorless, deadly poison that can kill you. Do not run the engine indoors or in an enclosed area.
- Keep your hands, feet, hair and loose clothing away from attachment discharge area, the underside of the mower, and any moving parts while engine is running.
- Do not touch the equipment or attachment parts which may be hot from operation. Allow them to cool before attempting to maintain, adjust, or service them.
- Battery acid is poisonous and can cause burns. Avoid contact with skin, eyes and clothing. Protect your face, eyes, and clothing when working with a battery.
- Battery gases can explode. Keep cigarettes, sparks, and flames away from battery.
- Use only genuine Toro replacement parts to maintain the original standards.
- Use only Toro-approved attachments. You may void the warranty if you use unapproved attachments.

A 2–post foldable ROPS (Rollover Protection System) is available for this machine. A ROPS is recommended if you will be mowing next to drop-offs, near water, or on steep banks which could result in a rollover. Contact an Authorized Toro Service Dealer for more details.

Slope Operation

- Do not mow slopes greater than 15 degrees.
- Do not mow near drop-offs, ditches, steep banks, or water. Wheels dropping over edges can cause rollovers, which may result in serious injury, death, or drowning.
- Do not mow slopes when grass is wet. Slippery conditions reduce traction and could cause sliding and a loss of control.
- Do not make sudden turns or rapid speed changes.
- Use a walk behind mower and/or a hand trimmer near drop-offs, ditches, steep banks, or water.
- Reduce speed and use extreme caution on slopes.
- Remove or mark obstacles such as rocks, tree limbs, etc. from the mowing area. Tall grass can hide obstacles.
- Watch for ditches, holes, rocks, dips, and rises that change the operating angle, as rough terrain could overturn the machine.
- Avoid sudden starts when mowing uphill, because the mower may tip backward.
- Be aware that loss of traction may occur going downhill. Weight transfer to the front wheels may cause drive wheels to slip and cause loss of braking and steering.
- Always avoid sudden starting or stopping on a slope. If tires lose traction, disengage the blades and proceed slowly off the slope.
- Follow the manufacturer's recommendations for wheel weights or counterweights to improve stability.
- Use extreme care with grass catchers or other attachments. These can change the stability of the machine and cause a loss of control.

Sound Pressure

This unit has a sound pressure level at the operator's ear of 93 dBA, which includes an Uncertainty Value (K) of 1 dBA.

The sound pressure level was determined according to the procedures outlined in EN ISO 5395:2013.

Sound Power

This unit has a guaranteed sound power level of 105 dBA, which includes an Uncertainty Value (K) of 1 dBA.

The sound power level was determined according to the procedures outlined in ISO 11094.

Vibration Level

Hand-Arm

Measured vibration level for right hand = 3.0 m/s^2

Measured vibration level for left hand = 2.6 m/s^2

Uncertainty Value (K) = 1.5 m/s^2

Measured values were determined according to the procedures outlined in EN ISO 5395:2013.

Whole Body

Measured vibration level = 0.46 m/s^2

Uncertainty Value (K) = 0.23 m/s^2

Measured values were determined according to the procedures outlined in EN ISO 5395:2013.

Slope Indicator

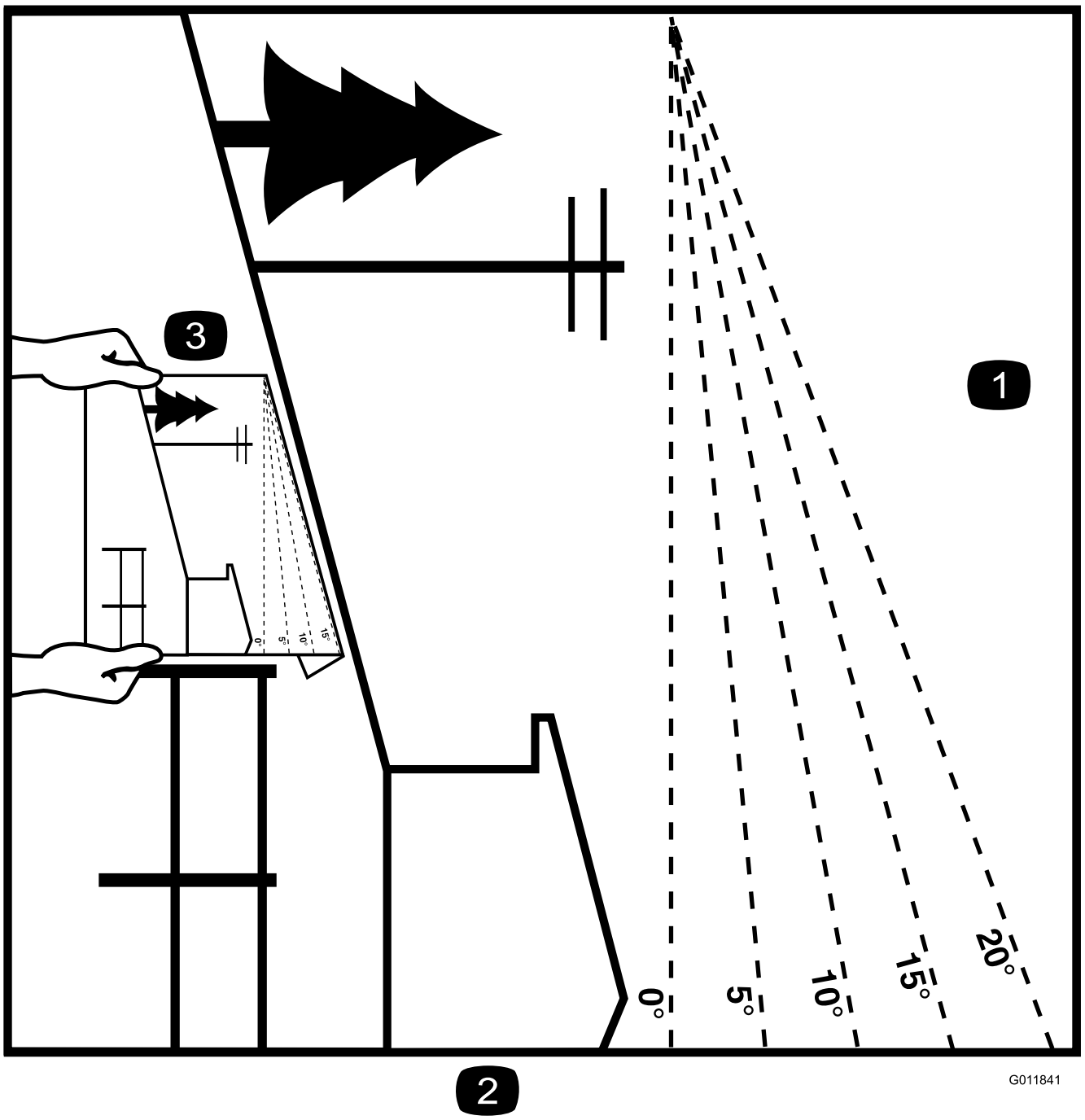

Figure 3

This page may be copied for personal use.

1. The maximum slope you can safely operate the machine on is **15 degrees**. Use the slope chart to determine the degree of slope of hills before operating. **Do not operate this machine on a slope greater than 15 degrees.** Fold along the appropriate line to match the recommended slope.
2. Align this edge with a vertical surface, a tree, building, fence pole, etc.
3. Example of how to compare slope with folded edge.

Safety and Instructional Decals

Safety decals and instructions are easily visible to the operator and are located near any area of potential danger. Replace any decal that is damaged or lost.

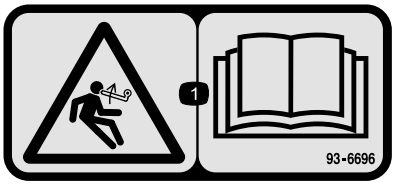

93–6696

1. Stored energy hazard—read the *Operator's Manual*.

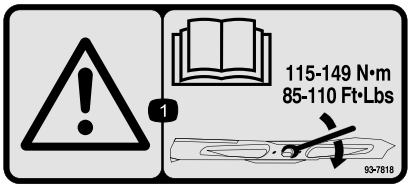

93-7818

1. Warning—read the *Operator's Manual* for instructions on torquing the blade bolt/nut to 115 to 149 N-m (85 to 110 ft-lb).

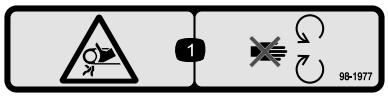

98-1977

1. Entanglement hazard, belt—stay away from moving parts.

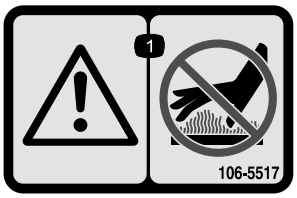

106-5517

1. Warning—do not touch the hot surface.

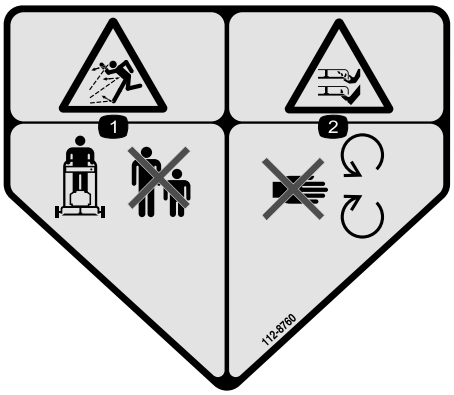

112-8760

1. Thrown object hazard—keep bystanders a safe distance from the machine.
2. Cutting/dismemberment of hand or foot—stay away from moving parts.

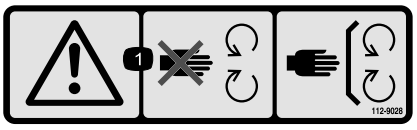

112-9028

1. Warning—stay away from moving parts; keep all guards in place.



115-4212

1. Hydraulic oil level
2. Read the *Operator's Manual*.
3. Warning—do not touch the hot surface.

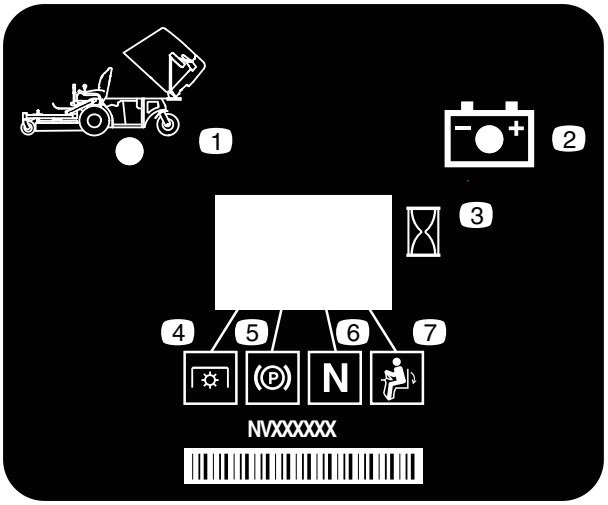

116-8813

1. Hopper up indicator
2. Battery
3. Hour meter
4. PTO
5. Parking brake
6. Neutral
7. Operator-presence switch

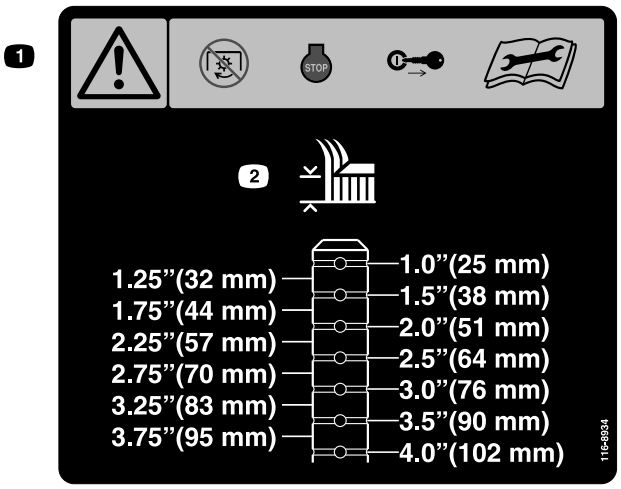

116-8934

1. Warning—disengage blade clutch, shut off engine, and remove key before making adjustments, servicing, or cleaning deck.
2. Height of cut.



116-8935

1. Warning folding deck hazard—lock the pivot joint by pushing inward and rotating toward the front of the deck.

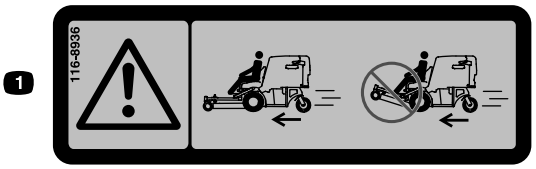

116-8936

1. Danger—do not operate with the deck in the tilt-up position.

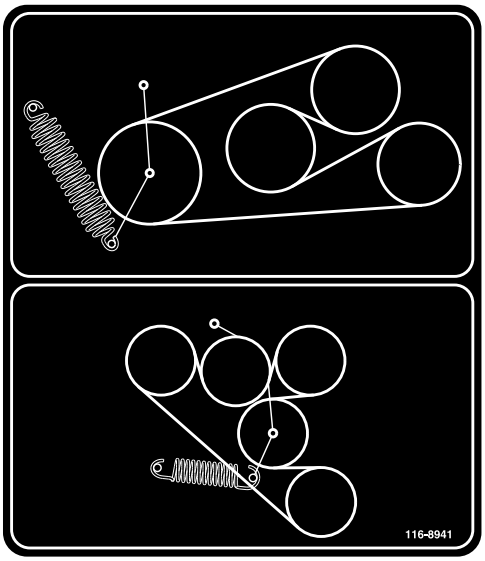

116-8941

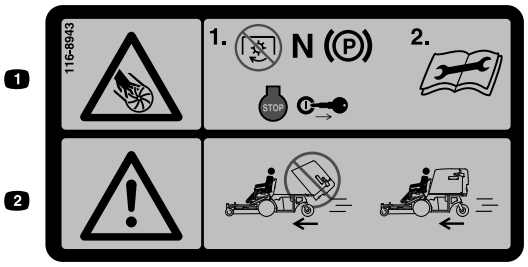

116-8943

1. Rotating blades hazard-Disengage the PTO, move the speed control lever to neutral, engage the parking brake, shut off the engine, and remove the key before leaving the operator’s position. Read the instructions before servicing or performing maintenance.
2. Danger—do not operate with the mower hopper in the raised position.

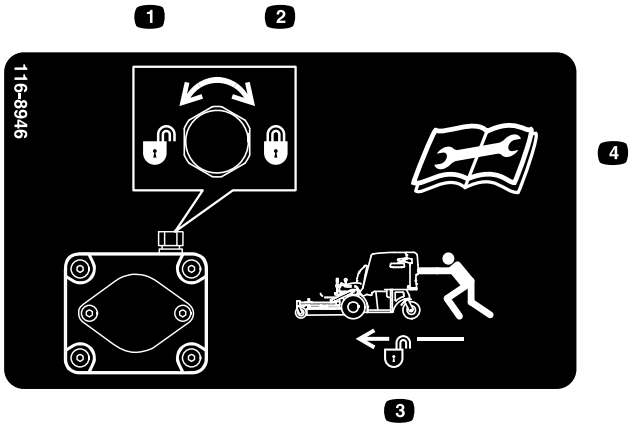

116-8946

1. Rotate counterclockwise to release
2. Rotate clockwise to lock
3. Unlock to push the machine
4. Read the instructions before servicing or performing maintenance.

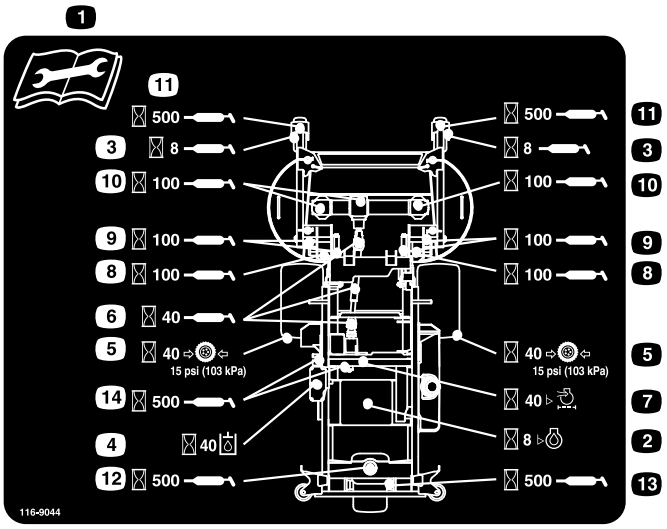

116-9044

1. Read the *Operator's Manual* before performing any maintenance.
2. Check the engine oil every 8 hours.
3. Grease the front caster wheel bearings every 8 hours.
4. Check the hydraulic fluid level every 40 hours (only use recommended hydro oil).
5. Check the ttire pressure every 40 hours.
6. Grease the deck drive PTO every 40 hours.
7. Check the air cleaner every 40 hours.
8. Grease the deck lock mechanism every 100 hours.
9. Grease the deck pivots every 100 hours.
10. Check the gearbox oil every 100 hours (use only Mobil 1 75W-90 gear oil).
11. Grease the front caster pivots every 500 hours.
12. Grease the rear caster pivot every 500 hours.
13. Grease the rear caster wheel every 500 hours.
14. Grease the belt idlers every 500 hours.

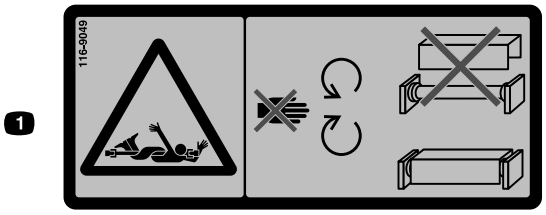

116-9049

1. Rotating driveline hazard—keep all driveline shields in place. Securely attach both ends of the driveline.



117–2718

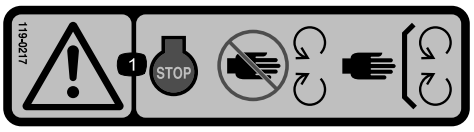

119-0217

1. Warning—Stop the engine; stay away from moving parts; keep all guards and shields in place.

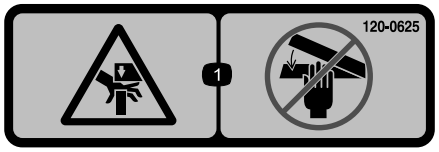

120-0625

1. Pinch point, hand—keep hands away.

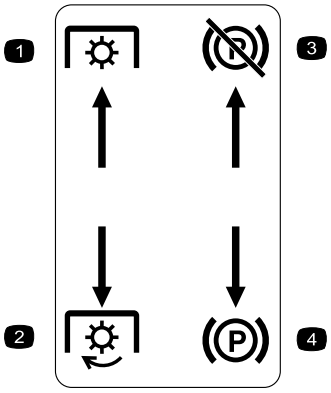

Molded in LH Console

1. PTO—disengage
2. PTO—engage
3. Park brake—release
4. Park brake—engage

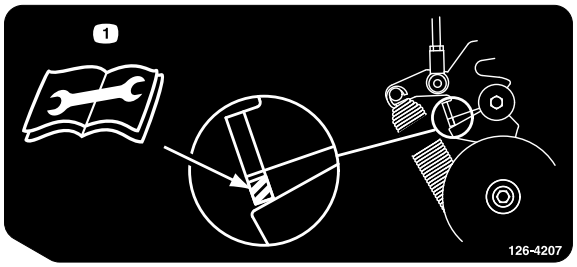

126-4207

1. Refer to the *Operator's Manual* for adjustment procedure. When the PTO is engaged, the idler arm position must be in hatched area or an adjustment is required.

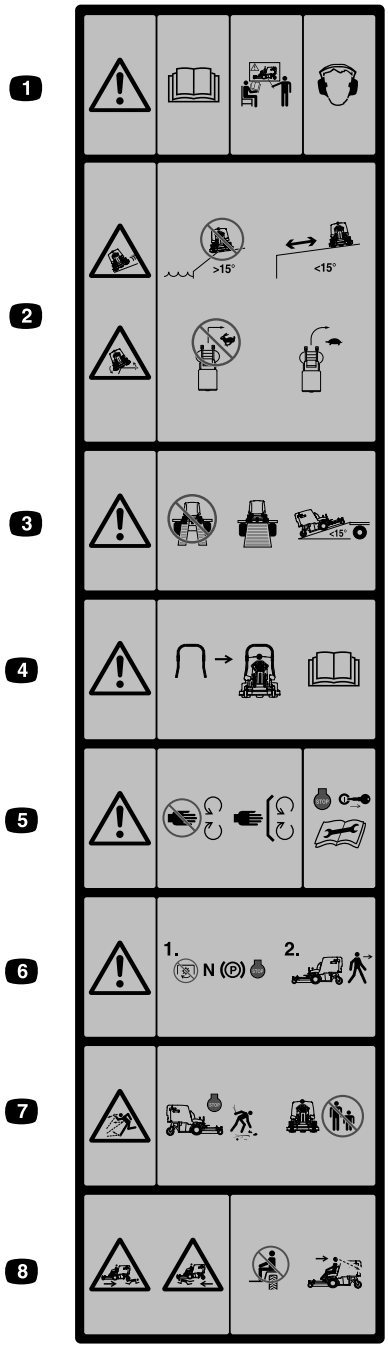

Molded into Front of Hopper

1. Warning—read the Operator's Manual. Do not operate this machine unless you are trained. Wear hearing protection.
2. Sliding, tipping hazard. Do not use the machine near drop-offs with slopes greater than 15 degrees, use the machine a safe distance from drop-offs on slopes less than 15 degrees; do not turn sharply while traveling fast, drive slowly when turning.
3. Warning—Do not use dual ramps, use one piece ramps when transporting machine; Do not use ramps with an inclination greater than 15 degrees.
4. A rollbar is available; use it for areas where there are slopes, drop-offs, or water.
5. Warning—Stay away from moving parts; keep all guards in place. Shut off engine and remove key before adjusting, servicing, or cleaning.
6. Warning—Disengage the PTO, move the speed control lever to the neutral position, engage the parking brake, and shut off the engine before leaving the operator's position.
7. Thrown object hazard—Pick up objects that could be thrown by the mower. Do not operate when people and pets are in the area. Keep the deflector in place.
8. Crushing/dismemberment hazard of bystanders—Do not carry passengers, look forward and down when operating the machine, and look behind and down when reversing.



Battery Symbols

Some or all of these symbols are on your battery.

1. Explosion hazard
2. No fire, open flame, or smoking
3. Caustic liquid/chemical burn hazard
4. Wear eye protection.
5. Read the *Operator's Manual.*
6. Keep bystanders a safe distance from the battery.
7. Wear eye protection; explosive gases can cause blindness and other injuries.
8. Battery acid can cause blindness or severe burns.
9. Flush eyes immediately with water and get medical help fast.
10. Contains lead; do not discard

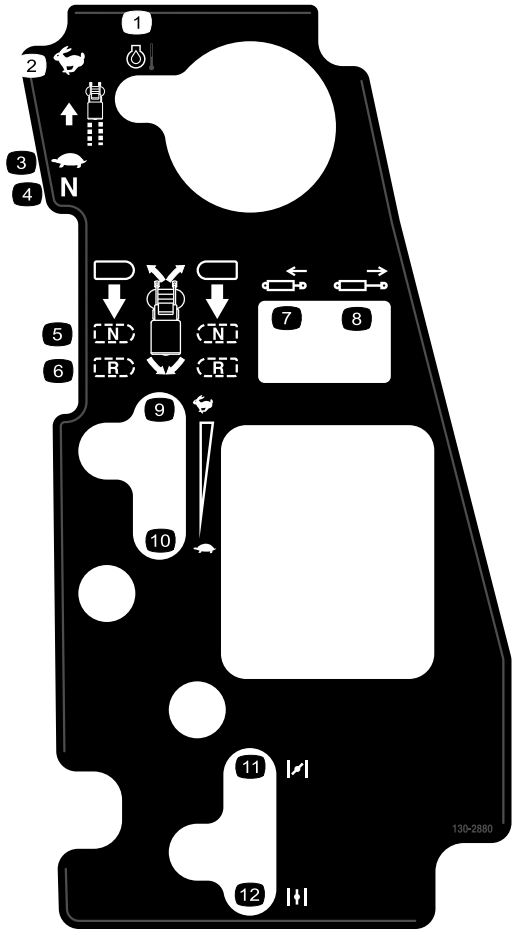

130-2880

1. Engine temperature
2. Fast
3. Slow
4. Neutral
5. Neutral
6. Reverse
7. Retract the piston
8. Extend the piston
9. Fast
10. Slow
11. Choke—closed/on
12. Choke—open/off

Product Overview

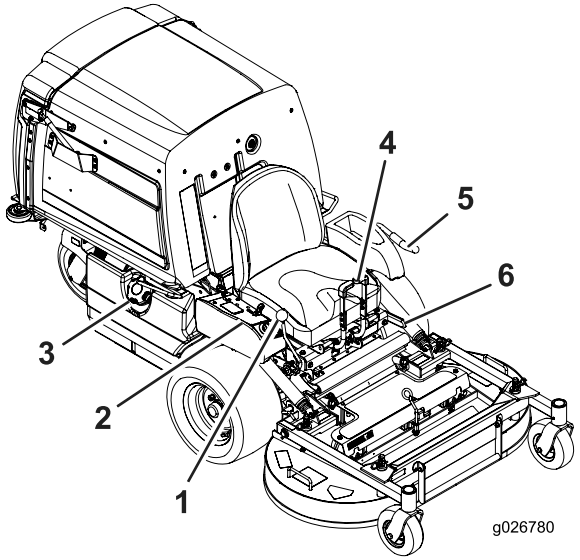

Figure 4

1. Speed-control lever
2. Controls
3. Fuel cap
4. Motion-control levers
5. PTO-engagement lever
6. Parking-brake lever

Controls

Become familiar with all the controls before you start the engine and operate the machine (Figure 4 and Figure 5).

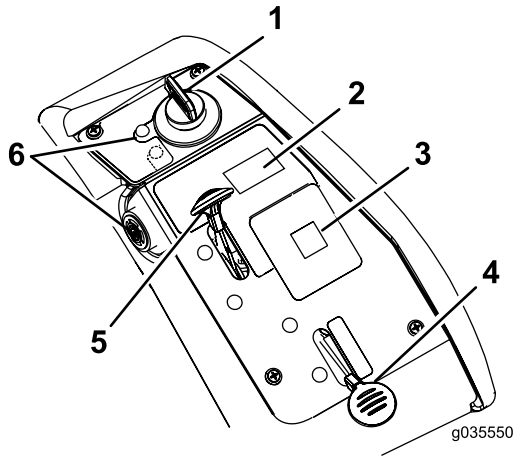

Figure 5

1. Ignition switch
2. Hopper switch
3. Message display
4. Choke
5. Throttle
6. Engine-oil temperature light and buzzer

Motion-Control Levers

The motion-control levers are used to drive the machine forward, reverse, and turn either direction (Figure 4).

Speed-Control Lever

The speed control lever sets maximum forward speed of the machine (Figure 4). Moving speed control lever rearward to the neutral position places the drive system into neutral.

Throttle Control

The throttle is used to control engine speed. The throttle control is variable between **Fast** and **Slow**.

Choke Control

The choke is used to aid in starting a cold engine. Move the choke to the closed/on position to start a cold engine.

Note: Do not run a warm engine with choke in the **on** position.

Parking-Brake Lever

The brake lever engages a parking brake on the drive wheels (Figure 4).

Ignition Switch

This switch is used to start the mower engine and has 3 positions: **Start, Run** and **Off**.

Hour Meter

The hour meter records the number of hours the engine has operated. The hour meter is recording when the decimal point is flashing in the Hour/Voltage display. Use these times for scheduling regular maintenance (Figure 6).

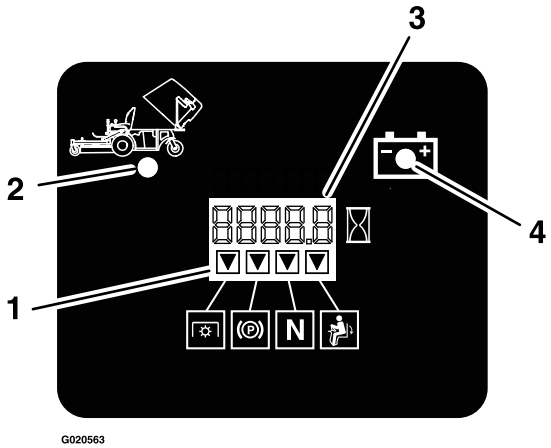

Figure 6

1. Safety interlock indicators
2. Hopper up
3. Hour/Voltage display
4. Low voltage indicator light

Safety-Interlock Indicators

There are symbols on the hour meter that indicate with a black triangle that the interlock component is in the correct position (Figure 6).

PTO Engagement Lever

The PTO engagement lever is used to engage the blades and the blower. Pull the lever up to engage the blades and blower. To disengage the blades and blower, push the PTO engagement lever down.

Battery Indicator Light

When the ignition key is initially turned to the **Run** position for a few seconds, the battery voltage will be displayed in the area where the hours are normally displayed.

The battery light turns on when the ignition is turned on and when the charge is below the correct operating level (Figure 6).

Engine Oil Temperature Light and Buzzer

The engine oil temperature light monitors the temperature of the engine oil. An illuminated engine oil temperature light and intermittent buzzing sound signals the engine is overheating.

Attachments/Accessories

A selection of Toro approved attachments and accessories is available for use with the machine to enhance and expand its capabilities. Contact your Authorized Service Dealer or Distributor or go to www.Toro.com for a list of all approved attachments and accessories.

Specifications

Note: Specifications and design are subject to change without notice.

Width:

	122 cm Mower Deck
Without Mower Deck	108.2 cm (42.6 inches)
With Mower Deck	125.0 cm (49.2 inches)

Length:

	122 cm Mower Deck
Without Mower Deck	170.9 cm (67.3 inches)
Mower Deck—Up	207.6 cm (81.8 inches)
Mower Deck—Down	240.0 cm (94.5 inches)

Height:

122 cm Mower Deck
130.0 cm (51.2 inches)

Weight:

122 cm Mower Deck
538 kg (1,185 lb)

Operation

Note: Determine the left and right sides of the machine from the normal operating position.

Adding Fuel

- For best results, use only clean, fresh (less than 30 days old), unleaded gasoline with an octane rating of 87 or higher ((R+M)/2 rating method).
- **Ethanol:** Gasoline with up to 10% ethanol (gasohol) or 15% MTBE (methyl tertiary butyl ether) by volume is acceptable. Ethanol and MTBE are not the same. Gasoline with 15% ethanol (E15) by volume is not approved for use. **Never use** gasoline that contains more than 10% ethanol by volume, such as E15 (contains 15% ethanol), E20 (contains 20% ethanol), or E85 (contains up to 85% ethanol). Using unapproved gasoline may cause performance problems and/or engine damage which may not be covered under warranty.
- **Do not** use gasoline containing methanol.
- **Do not** store fuel either in the fuel tank or fuel containers over the winter unless you use a fuel stabilizer.
- **Do not** add oil to gasoline.

⚠ DANGER

In certain conditions, gasoline is extremely flammable and highly explosive. A fire or explosion from gasoline can burn you and others and can damage property.

- **Fill the fuel tank outdoors, in an open area, when the engine is cold. Wipe up any gasoline that spills.**
- **Never fill the fuel tank inside an enclosed trailer.**
- **Do not fill the fuel tank completely full. Add gasoline to the fuel tank until the level is 6 to 13 mm (1/4 to 1/2 inch) below the bottom of the filler neck. This empty space in the tank allows gasoline to expand.**
- **Never smoke when handling gasoline, and stay away from an open flame or where gasoline fumes may be ignited by a spark.**
- **Store gasoline in an approved container and keep it out of the reach of children. Never buy more than a 30-day supply of gasoline.**
- **Do not operate without the entire exhaust system in place and in proper working condition.**

⚠ DANGER

In certain conditions during fueling, static electricity can cause a spark which can ignite the gasoline vapors. A fire or explosion from gasoline can burn you and others and can damage property.

- **Always place gasoline containers on the ground away from your vehicle before filling.**
- **Do not fill gasoline containers inside a vehicle or on a truck or trailer bed, because interior carpets or plastic truck-bed liners may insulate the container and slow the loss of any static charge.**
- **When practical, remove gas-powered equipment from the truck or trailer and fuel the equipment with the wheels on the ground.**
- **If this is not possible, then fuel such equipment on a truck or trailer from a portable container, rather than from a gasoline-dispenser nozzle.**
- **If a gasoline dispenser must be used, keep the nozzle in contact with the rim of the fuel tank or container opening at all times until fueling is complete.**

⚠ WARNING

Gasoline is harmful or fatal if swallowed. Long-term exposure to vapors can cause serious injury and illness.

- **Avoid prolonged breathing of vapors.**
- **Keep face away from nozzle and gas tank or conditioner bottle opening.**
- **Avoid contact with skin; wash off spills with soap and water.**

Using Fuel Stabilizer/Conditioner

Use a fuel stabilizer/conditioner in the machine to keep the fuel fresh during storage of 90 days or less. If you are storing the machine for longer, drain the fuel tank; see your authorized service dealer.

Important: Do not use fuel additives containing methanol or ethanol.

Add the correct amount of fuel stabilizer/conditioner to the fuel, and follow the directions of the manufacturer.

Note: Fuel stabilizer/conditioner is most effective when mixed with fresh gasoline. To minimize the chance of varnish deposits in the fuel system, use fuel stabilizer at all times.

Filling the Fuel Tank

1. Park the machine on level ground.
2. Shut the engine off and set the parking brake.
3. Clean around the fuel-tank cap and remove it. Add regular unleaded gasoline to the fuel tank until the level is 6 to 13 mm (1/4 to 1/2 inch) below the bottom of the filler neck. This space in the tank allows the gasoline to expand. Do not fill the fuel tank completely full.

Checking the Engine-Oil Level

Before you start the engine and use the machine, check the oil level in the engine crankcase; refer to Checking the Engine-Oil Level (page 35).

Breaking in a New Machine

New engines take time to develop full power. Mower decks and drive systems have higher friction when new, placing additional load on the engine. Allow 40 to 50 hours of break-in time for new machines to develop full power and best performance.

Think Safety First

Please read all safety instructions and symbols in the safety section. Knowing this information could help you or bystanders avoid injury.

⚠ DANGER

Operating on wet grass or steep slopes can cause sliding and loss of control.

Wheels dropping over edges can cause rollovers, which may result in serious injury, death, or drowning.

To avoid loss of control and possibility of rollover:

- **Do not operate near drop-offs or near water.**
- **Do not operate on slopes greater than 15 degrees.**
- **Reduce speed and use extreme caution on slopes.**
- **Avoid sudden turns or rapid speed changes.**

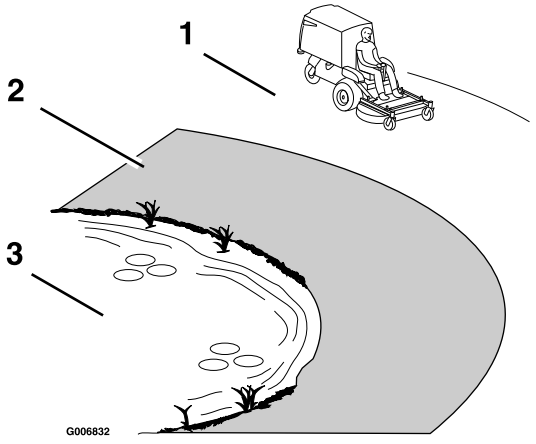

Figure 7

1. Safe zone—use the machine here on slopes less than 15 degrees or flat areas.
2. Danger zone—use a walk behind mower and/or a hand trimmer on slopes greater than 15 degrees, near drop-offs and water.
3. Water

⚠ CAUTION

This machine produces sound levels in excess of 85 dBA at the operator's ear and can cause hearing loss through extended periods of exposure.

Wear hearing protection when operating this machine.

The use of protective equipment for eyes, ears, feet, hands, and head is recommended.

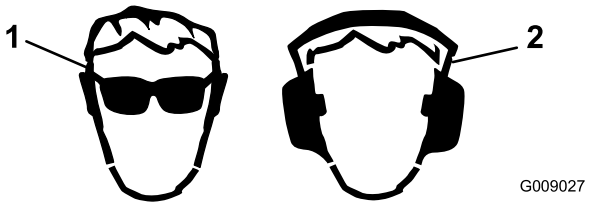

Figure 8

1. Wear eye protection.
2. Wear hearing protection.

Operating the Parking Brake

Always set the parking brake when you stop the machine or leave it unattended.

Setting the Parking Brake

⚠ WARNING

The parking brake may not hold a machine parked on a slope and could cause personal injury or property damage.

Do not park on slopes unless the wheels are chocked or blocked.

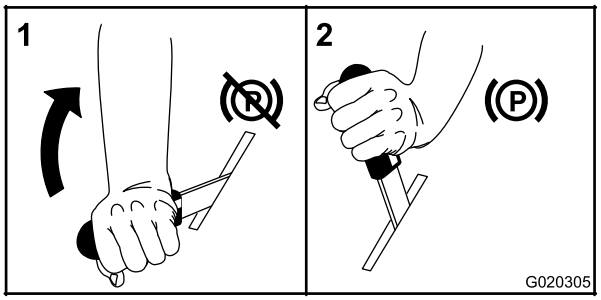

Figure 9

Releasing the Parking Brake

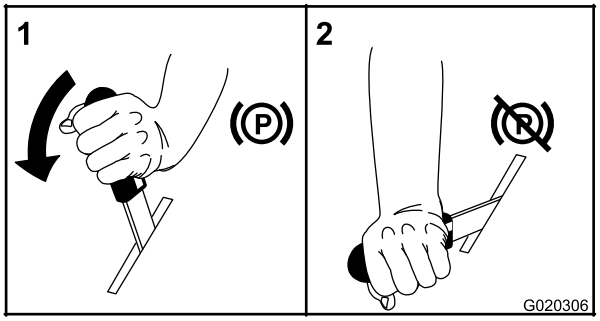

Figure 10

Operating the Throttle

The throttle control can be moved between **Fast** and **Slow** positions (Figure 11).

Always use the middle position when turning on the mower deck and blower with the PTO engagement lever.

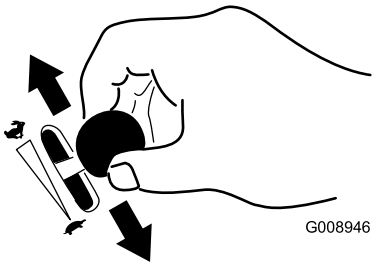

Figure 11

Operating the Ignition Switch

1. Turn the ignition key to the START position (Figure 12). When the engine starts, release the key.

   Important: Do not engage the starter for more than 10 seconds at a time. If the engine fails to start, allow a 60 second cool-down period between attempts. Failure to follow these instructions can burn out the starter motor.

   Note: Additional starting cycles may be required when starting the engine for the first time after the fuel system has been completely without fuel.

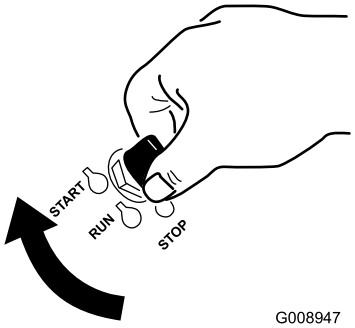

Figure 12

2. To shut off the engine, turn the ignition key to the stop position.

Operating the PTO Engagement Lever

The PTO engagement lever starts and stops the mower blades and blower.

⚠ WARNING

An uncovered discharge opening allows objects to be thrown toward you or bystanders. Also, contact with the blower blades could occur. Thrown objects or blade contact can cause serious injury or death.

Never operate the machine with the hopper or hopper door raised, removed, or altered.

Engaging the PTO Engagement Lever

1. Set the throttle to the MIDDLE position.
2. Pull the PTO lever upward until locked over center.
3. Place the throttle in the FAST position to begin mowing.

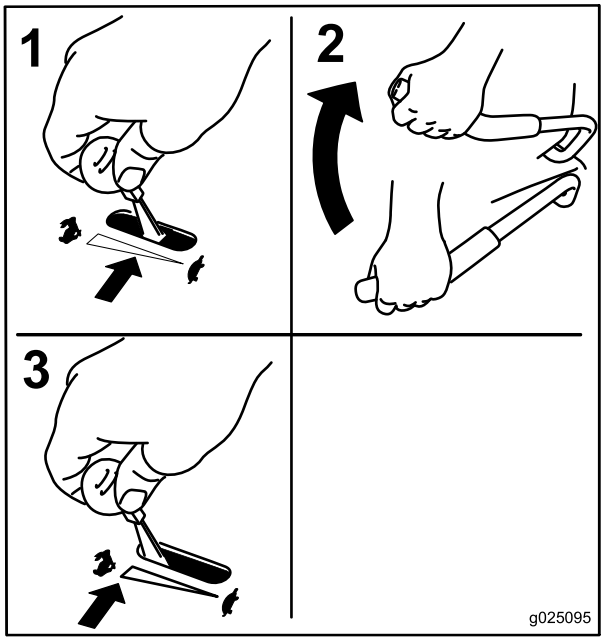

Figure 13

Disengaging the PTO Engagement Lever

1. Set the throttle to the MIDDLE position.
2. Push PTO lever down to the STOP position to stop the blades and blower.

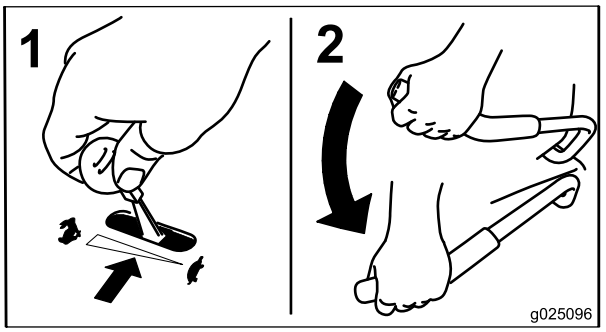

Figure 14

Starting and Shutting Off the Engine

Starting the Engine

1. Move the speed control lever to the NEUTRAL position.
2. Set the parking brake; refer to Setting the Parking Brake (page 18).
3. Move the PTO engagement lever to the OFF position (Figure 15).
4. Move the throttle lever midway between the SLOW and FAST positions.
5. On a cold engine, push the choke lever forward into the closed/on position. On a warm engine, leave the choke in the OPEN/OFF position.

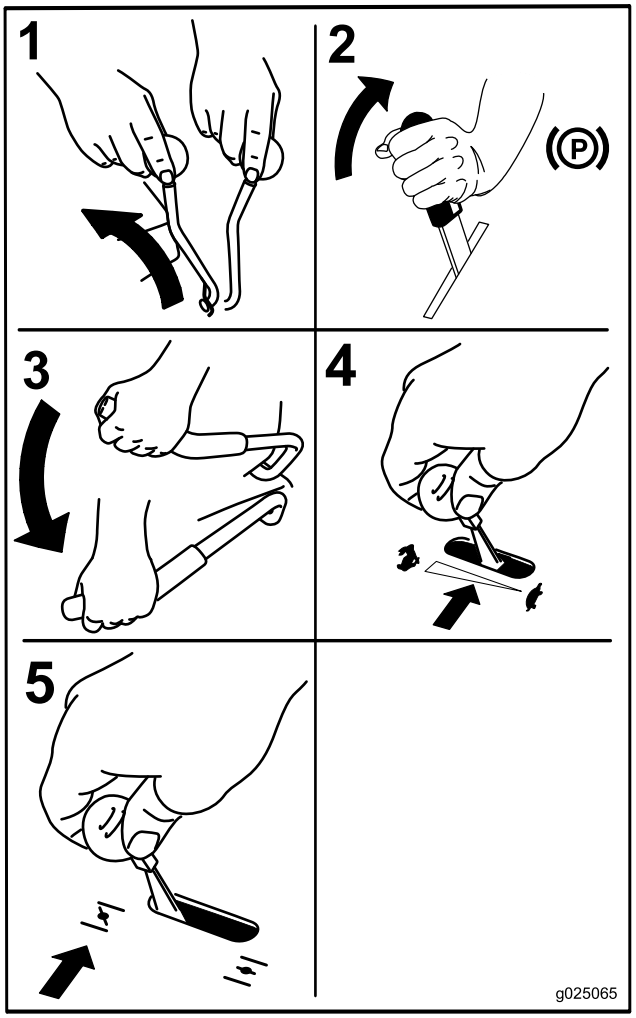

Figure 15

6. Turn the ignition key to the START position (Figure 12). When the engine starts, release the key.

   Important: Do not crank the engine continuously for more than 10 seconds at a time. If the engine does not start, wait 60 seconds between starting attempts. Failure to follow these guidelines can burn out the starter motor.

   Note: Additional starting cycles may be required when starting the engine for the first time after the fuel system has been without fuel completely.

7. If the choke is in the CLOSED/ON position, gradually return choke to the OPEN/OFF position as the engine warms up.

Shutting Off the Engine

⚠ CAUTION

Children or bystanders may be injured if they move or attempt to operate the machine while it is unattended.

Always remove the ignition key and set the parking brake when leaving the machine unattended, even if just for a few minutes.

Important: Set the parking brake before transporting.

1. Disengage the PTO.
2. Move speed control lever to the NEUTRAL position.
3. Engage the parking brake.
4. Place the throttle to the middle position.
5. Allow the engine to run for a minimum of 15 seconds, then turn the ignition switch to the OFF position to shut off the engine.
6. Remove the key to prevent children or other unauthorized persons from starting the engine.
7. Close the fuel shut-off valve when you do not use the machine for a few days, when transporting, or when you park the machine inside a building.

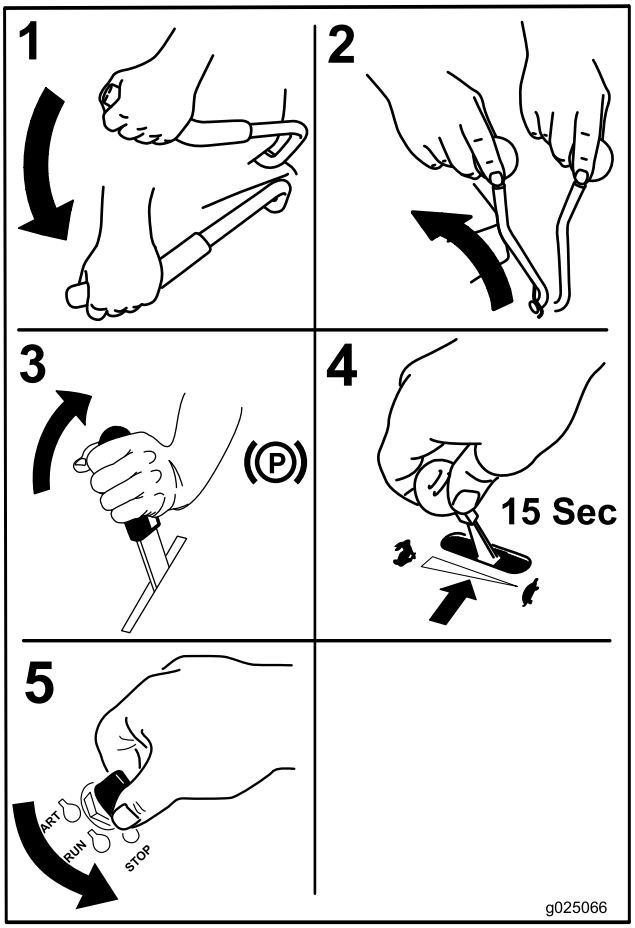

Figure 16

The Safety Interlock System

⚠ CAUTION

If the safety interlock switches are disconnected or damaged, the machine could operate unexpectedly, causing personal injury.

- **Do not tamper with the interlock switches.**
- **Check the operation of the interlock switches daily and replace any damaged switches before operating the machine.**

Understanding the Safety Interlock System

The safety interlock system is designed to prevent the engine from starting unless the following occurs:

- The parking brake is engaged.
- The PTO engagement lever is disengaged.
- The speed-control lever is in the NEUTRAL position

The safety interlock system is designed to shut off the engine when you rise from the seat when the PTO is engaged.

The hour meter has symbols to notify the user when the interlock component is in the correct position. When the component is in the correct position, a triangle lights up in the corresponding square.

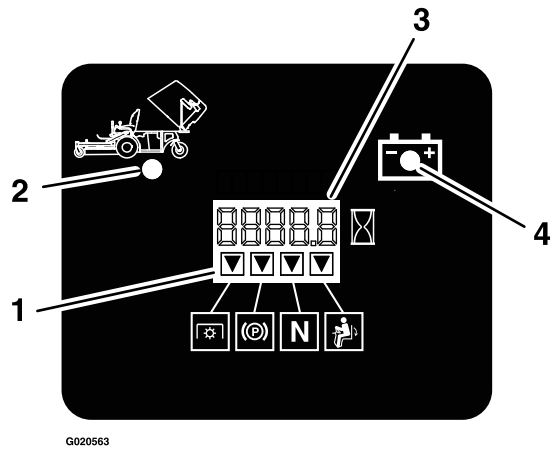

Figure 17

1. Triangles light up when the interlock components are in the correct position
2. Hopper up
3. Hour/Voltage display
4. Low voltage indicator light

Testing the Safety Interlock System

Service Interval: Before each use or daily

Test the safety interlock system before you use the machine each time. If the safety system does not operate as described below, have an Authorized Service Dealer repair the safety system immediately.

1. Sitting on the seat, engage the parking brake, move the PTO engagement lever to on, and move the speed control lever to NEUTRAL position. Try starting the engine; the engine should not crank.
2. Sitting on the seat, engage the parking brake and move the PTO engagement lever to off. Move the speed-control lever out of the NEUTRAL position. Try starting the engine; the engine should not crank.
3. Sitting on the seat, disengage the parking brake, move the PTO engagement lever to off, and move the speed-control lever to the NEUTRAL position. Try starting the engine; the engine should not crank.
4. Sitting on the seat, engage the parking brake, move the PTO engagement lever to off and move the speed-control lever to the NEUTRAL position. Now start the engine. While the engine is running, release the parking brake, engage the PTO engagement lever, and rise slightly from the seat; the engine should shut off.
5. Sitting on the seat, engage the parking brake, move the PTO engagement lever to off and move the speed-control lever to NEUTRAL position. Start the engine. Move the speed-control lever forward; the engine should shut off.

Driving Forward or Backward

The throttle control regulates the engine speed as measured in rpm (revolutions per minute). Place the throttle control in the FAST position for best performance. Always operate in the full throttle position when mowing.

⚠ CAUTION

This machine can spin very rapidly. You may lose control of the machine and cause personal injury or damage the machine.

- **Use caution when making turns.**
- **Slow down the machine before making sharp turns.**

Driving Forward

Note: To move the machine forward or rearward, you must sit in the seat and disengage the brake lever before you can move the speed-control lever; otherwise, the engine will stop.

To stop the machine, pull the speed-control lever to the NEUTRAL position.

1. Start the engine.
2. Release the parking brake; refer to Releasing the Parking Brake (page 18).
3. To move forward in a straight line move the speed control lever forward.

Note: The machine moves faster the farther the speed-control lever is moved away from neutral.

4. To turn left or right, pull 1 of the steering levers back toward neutral in the direction desired.
5. To stop the machine, pull the speed-control levers back to the NEUTRAL position.

Driving Backward

1. To move the machine rearward in a straight line, pull both steering levers rearward equally.

   To turn left or right, release pressure on the steering lever toward the direction desired.
2. To stop the machine, release the steering levers to the NEUTRAL position.

Stopping the Machine

1. Pull the speed-control lever back to the NEUTRAL position, disengage the PTO engagement lever, and turn the ignition key to off.
2. Set the parking brake when you leave the machine; refer to Setting the Parking Brake (page 18).
3. Remove the key from the ignition switch.

⚠ CAUTION

Children or bystanders may be injured if they move or attempt to operate the machine while it is unattended.

Always remove the ignition key and set the parking brake when leaving the machine unattended, even if just for a few minutes.

Unlatching the Seat

To unlatch the seat, remove the bolt and the pin on the left side of the seat (Figure 18).

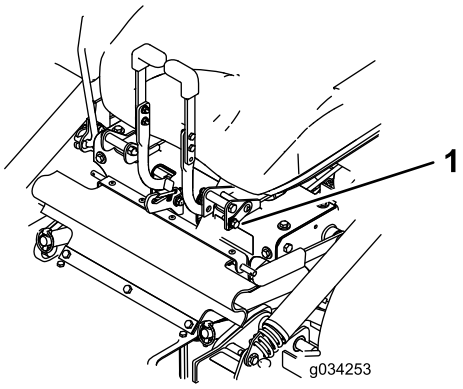

Figure 18

1. Bolt and pin

Raising the Mower Deck into Service Position

1. Shut off the engine, wait for all moving parts to stop, and remove key. Engage the parking brake.

⚠ WARNING

Incorrectly raising or lowering a mower deck can be dangerous. A dropped mower deck can result in a serious injury or property damage.

- **Always raise and lower the mower deck on flat, dry ground, free of any obstructions.**
- **Firmly grasp the mower deck lift handle and lower in a slow controlled manner.**
- **Always make sure the mower deck is securely latched in the up or down position.**

2. Loosen the bolts attached to the rubber guard (Figure 19).

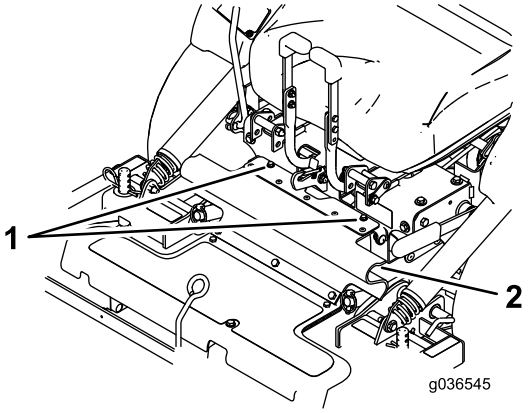

Figure 19

1. Bolts
2. Rubber guard

3. Fold the guard forward.
4. Loosen the bolts and remove metal guards shown in Figure 20.

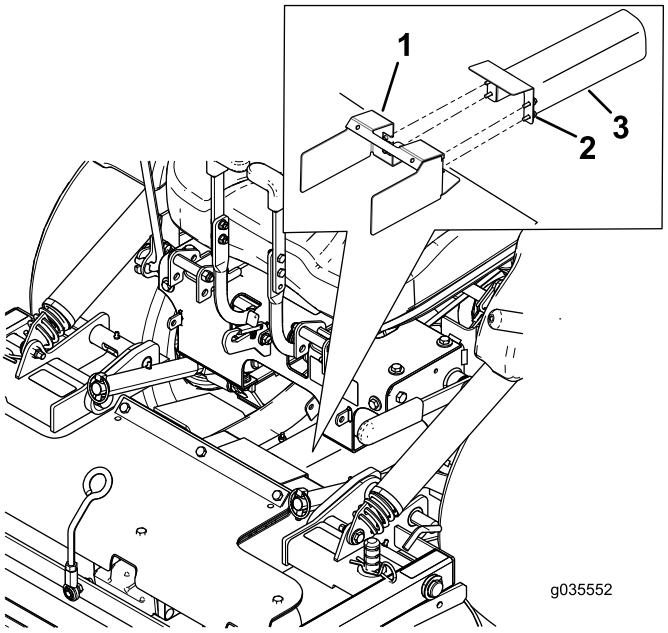

Figure 20

1. Guard attached to the mower deck
2. Loosen the bolts
3. Metal guards

5. Release the mower deck locking pins on each side (Figure 21).

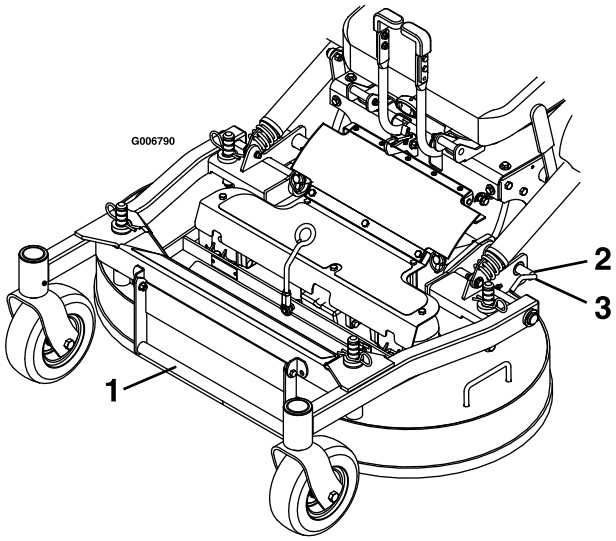

Figure 21

1. Deck lift handle
2. Rotate the mower deck locking pin toward the rear and pull outward to unlock.
3. Push the deck locking pin in and rotate it toward the front to lock.

6. Using deck-lift handle, lift deck up and latch in up position (latch is located at front center of seat) (Figure 22).

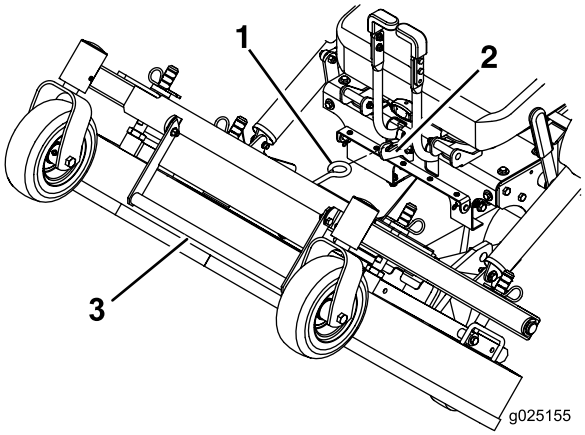

Figure 22

1. Secure the mower deck in the raised position by securing the mower deck latch onto the hook.
2. Hook
3. Deck-lift handle

⚠ WARNING

Engaging the PTO with a deck in the raised position can result in a serious injury or property damage.

Always lower and lock the mower deck in the operation position before engaging the PTO.

Lowering the Mower Deck to the Operating Position

1. While firmly holding onto deck-lift handle, unhook mower deck latch from the machine and slowly lower mower deck to the ground (Figure 22).
2. Install the metal guards and bolts as shown in Figure 20.
3. Install the rubber guard with the bolts (Figure 19).
4. Push the deck locking pins inward and rotate them forward to securely lock the mower deck in the lowered position (Figure 21).

⚠ WARNING

Operating mower without locking pins securely latched can result in the mower deck folding up unexpectedly. The mower deck folding up unexpectedly can cause serious injury.

Always operate mower with locking pins securely latched.

Adjusting the Fill Reduction System (FRS) Baffles

The fill reduction system allows you to reduce the amount of clippings collected by varying degrees.

The advantages include less frequent emptying of the hopper and the return of nutrients to the soil.

The following are possible configurations:

- Baffles open with standard blades—maximum collection
- Baffles closed with standard blades—partial mulching
- Baffles closed with mulch blades—intermediate mulching
- Mulch plug installed with mulch blades—complete mulching (requires mulch kit)

1. Shut off the engine, wait for all moving parts to stop, and remove key.
2. Engage the parking brake.
3. Loosen the bolts attached to the rubber guard (Figure 23).
4. Fold the guard forward.

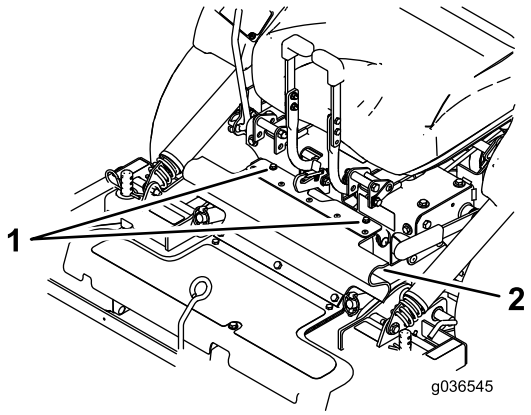

Figure 23

1. Bolts
2. Rubber guard

5. Loosen the locknuts on the rear studs of the FRS baffles.

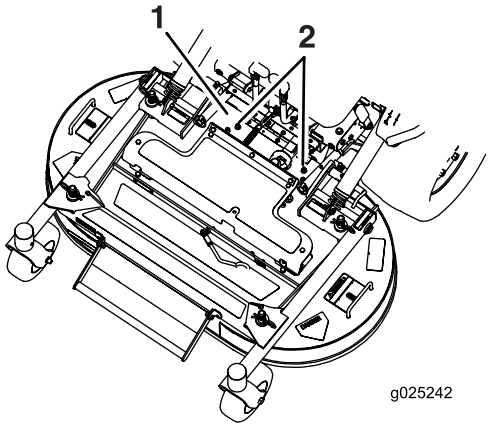

Figure 24

1. Rubber guard removed for clarity
2. Loosen locknuts

6. Raise the mower deck; refer to Raising the Mower Deck into Service Position (page 22).
7. Remove the bolt and washer at the front of each FRS baffle (Figure 25).
8. Rotate the baffles into the desired position and install the bolt and washer.

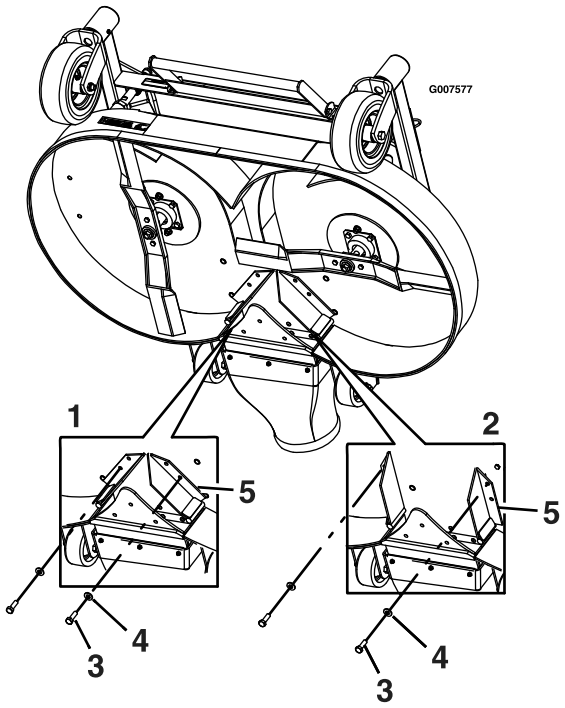

Figure 25

1. Baffles shown in closed position
2. Baffles shown in open position
3. Bolt
4. Washer
5. Baffles

9. Lower the mower deck; refer to Lowering the Mower Deck to the Operating Position (page 23).

10. Slightly tighten the locknuts on the rear studs of the FRS baffles.

    Note: The locknuts on the rear studs may be left slightly loose if you anticipate adjusting the baffles frequently.

11. Install the rubber guard using the attached bolts.

Adjusting the Height of Cut

The cutting height of the mower deck is adjusted from 2.5 to 10.2 cm (1 to 4 inches) in 0.63 mm (1/4 inch) increments.

1. Move the speed control lever to the NEUTRAL position to stop the machine.
2. Disengage the PTO, engage the parking brake, shut off the engine, and wait for all moving parts to stop.
3. Using the mower-deck handle, raise the mower deck and move the cotter pins to the desired height-of-cut position. Repeat for the opposite side.

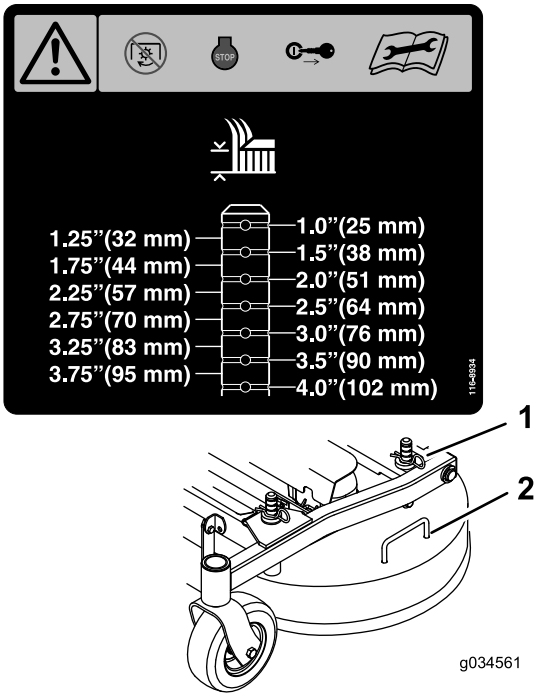

Figure 26

1. Cotter pin
2. Mower-deck handle

Emptying the Hopper

A full hopper is indicated by a buzzer located behind the operator in the hopper. Empty the hopper when the buzzer sounds to prevent clogging of the blower or the mower deck.

1. Disengage the PTO, move the speed control to NEUTRAL, set the parking brake, and dismount the machine to dump the hopper.
2. Make sure the machine is on a dry, level surface.
3. Lift the rear door up and allow it to rest on top of the hopper.
4. Using the handles at the lower front of the hopper, raise the hopper to dump the contents.
5. Lower the hopper and close the hopper door.

Clearing the Hopper Screen

Remove the screen by firmly lifting the screen handles (Figure 27).

Pull the screen toward the back to remove it. As needed, gently tap the screen to remove debris.

Note: Excessive buildup on the screen can cause the blower to plug.

Note: In conditions where the screen clogs quickly, the front removable screen panel can be turned and installed under the primary screen to allow free air flow from the hopper.

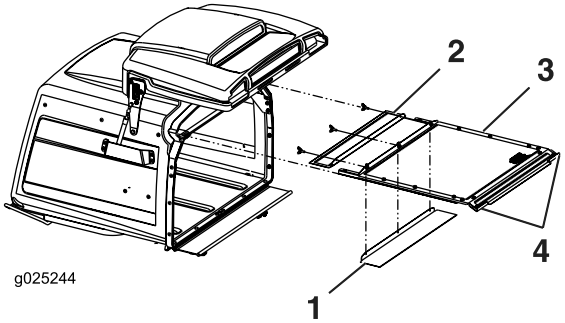

Figure 27

1. Front removable screen can be rotated and stored for wet conditions
2. Front removable screen
3. Primary screen
4. Handles

Using the Drive-Wheel-Release Valves

⚠ WARNING

Hands may become entangled in the rotating drive components below the engine deck, which could result in serious injury.

Shut off the engine, remove the key, and allow all moving parts to stop before accessing the drive-wheel-release valves.

⚠ WARNING

The engine and hydraulic-drive units can become very hot. Touching a hot engine or hydraulic-drive units can cause severe burns.

Allow the engine and hydraulic-drive units to cool completely before accessing the drive-wheel-release-valves.

The drive wheel release valves are located on the top left, front corner of hydrostatic pumps.

1. Move the speed-control lever to the NEUTRAL position to stop the machine.
2. Disengage the PTO, engage the parking brake, shut off the engine, and wait for all moving parts to stop.
3. Unlatch the seat and tilt the seat up to gain access to the pumps. Refer to Unlatching the Seat (page 22).
4. Rotate both release valves 1 turn counterclockwise to release the drive system (Figure 28). This allows the hydraulic fluid to bypass the pump, enabling the wheels to turn.
5. Disengage the parking brake before pushing the machine.

   Note: Do not tow the machine.
6. Rotate the valves clockwise to run the machine.

   Note: Do not overtighten the valves.

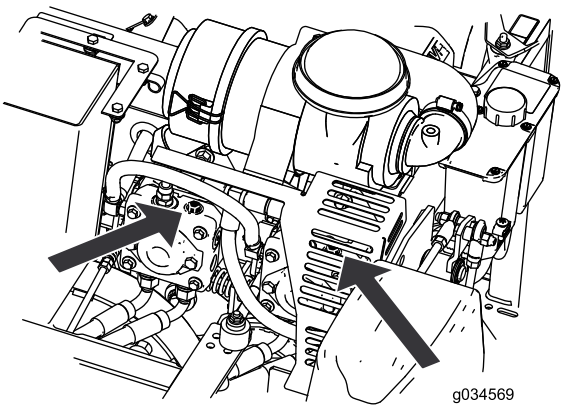

Figure 28

Transporting the Machine

Use a heavy-duty trailer or truck to transport the machine. Ensure that the trailer or truck has all necessary brakes, lighting, and marking as required by law. Please carefully read all the safety instructions. Knowing this information could help you, your family, pets, or bystanders avoid injury.

⚠ WARNING

Driving on the street or roadway without turn signals, lights, reflective markings, or a slow-moving vehicle emblem is dangerous and can lead to accidents, causing personal injury.

Do not drive the machine on a public street or roadway.

1. If using a trailer, connect it to the towing vehicle and connect the safety chains.
2. If applicable, connect the trailer brakes.
3. Load the machine onto the trailer or truck.
4. Shut off the engine, remove the key, set the brake, and close the fuel valve.
5. Securely fasten the machine to the trailer or truck with straps, chains, cable, or ropes down and outward from the machine.

Loading the Machine

Use extreme caution when loading or the unloading machine onto a trailer or a truck. Use a full-width ramp that is wider than the machine for this procedure.

Important: If a full width ramp is not available, use enough individual ramps to simulate a full width ramp.

Ensure that the ramp is long enough so that the angle with the ground does not exceed 15 degrees. A steeper angle may cause mower components to get caught as the machine moves from the ramp to the trailer or truck. Steeper angles may also cause the machine to tip or lose control. If you are loading the machine on or near a slope, position the trailer or truck so that it is on the down side of the slope and the ramp extends up the slope. This minimizes the ramp angle.

Important: Do not attempt to turn the machine while on the ramp, you may loose control and drive off the side.

⚠ WARNING

Loading a machine onto a trailer or truck increases the possibility of a tip-over and could cause serious injury or death.

- **Use extreme caution when operating a machine on a ramp.**
- **Use only a full-width ramp; do not use individual ramps for each side of the machine.**
- **If a full width ramp is not available, use enough individual ramps to simulate a full width ramp.**
- **Do not exceed a 15-degree angle between the ramp and the ground or between the ramp and the trailer or truck.**
- **Avoid sudden acceleration or deceleration while driving the machine on a ramp as this could cause a loss of control or a tip-over.**

Operating Tips

Using the Fast Throttle Setting

For best mowing and maximum air circulation, operate the engine at the FAST position. Air is required to thoroughly cut grass clippings, so do not set the height-of-cut so low as to totally surround the mower in uncut grass. Always try to have 1 side of the mower free from uncut grass, which allows air to be drawn into the mower.

Cutting a Lawn for the First Time

Cut grass slightly longer than normal to ensure that the cutting height of the mower does not scalp any uneven ground. However, the cutting height used in the past is generally the best one to use. When cutting grass longer than 15 cm (6 inches) tall, you may want to cut the lawn twice to ensure an acceptable quality of cut.

Cutting a Third of the Grass Blade

It is best to cut only about a third of the grass blade. Cutting more than that is not recommended unless grass is sparse, or it is late fall when grass grows more slowly.

Alternating the Mowing Direction

Alternate the mowing direction to keep the grass standing straight. This also helps disperse clippings which enhances decomposition and fertilization.

Mowing at Correct Intervals

Grass grows at different rates at different times of the year. To maintain the same cutting height, mow more often in early spring. As the grass growth rate slows in mid summer, mow less frequently. If you cannot mow for an extended period, first mow at a high cutting height, then mow again 2 days later at a lower height setting.

Using a Slower Cutting Speed

To improve cut quality, use a slower ground speed in certain conditions.

Avoiding Cutting Too Low

When mowing uneven turf, raise the cutting height to avoid scalping the turf.

Stopping

If you must stop the forward motion of the machine while mowing, a clump of grass clippings may drop onto your lawn. To avoid this, move onto a previously cut area with the blades engaged or you can disengage the mower deck while moving forward.

Keeping the Underside of the Mower Clean

Clean clippings and dirt from the underside of the mower after each use. If grass and dirt build up inside the mower, cutting quality will eventually become unsatisfactory.

Maintaining the Blade(s)

Maintain a sharp blade throughout the cutting season because a sharp blade cuts cleanly without tearing or shredding the grass blades. Tearing and shredding turns grass brown at the edges, which slows growth and increases the chance of disease. Check the mower blades after each use for sharpness, and for any wear or damage. File down any nicks and sharpen the blades as necessary. If a blade is damaged or worn, replace it immediately with a genuine Toro replacement blade.

Maintenance

Recommended Maintenance Schedule(s)

Maintenance Service Interval	Maintenance Procedure
After the first 50 hours	• Change oil in all 3 gearbox housings. Add oil as needed until level with oil-drain plug.
After the first 100 hours	• Check the wheel lug nut torque. • Check the wheel hub nut torque. • Check the parking brake adjustment. • Change the hydraulic filter and reservoir hydraulic fluid when using any type of fluid.
Before each use or daily	• Check the safety system. • Grease the front caster wheel hubs. • Check the engine-oil level. • Clean the engine screen and the oil cooler. • Clean the hydraulic pumps. • Check the mower blades. • Clean the mower deck. • Clean debris from the machine.
Every 40 hours	• Grease the drive shaft. • Check the tire pressure. • Inspect the belts for cracks and wear. • Check the hydraulic fluid level.
Every 100 hours	• Grease the mower deck flip-up pivot. • Grease the mower deck push-arm tubes. • Change oil in all 3 gearbox housings. Add oil as needed until it is level with the oil-drain plug. • Change the engine oil (more often in dirty or dusty conditions). • Clean the engine-oil cooler. • Check and clean the engine cooling fins and shrouds.
Every 150 hours	• Inspect the primary filter and air-inlet screen.
Every 160 hours	• Lubricate the brake-handle pivot. • Lubricate the brake-rod bushings. • Lubricate the steering-linkage-rod ends.
Every 200 hours	• Change the engine oil filter. • Replace the fuel filter (more often in dirty or dusty conditions).
Every 250 hours	• Replace the primary air filter and check the safety air filter (more often in dusty or sandy conditions). • Change the hydraulic filter and reservoir hydraulic fluid when using Mobil® 1 Oil (more often in dirty or dusty conditions).
Every 500 hours	• Replace the safety air filter. • Check and gap the spark plug. • Check the wheel lug nut torque. • Check the wheel hub nut torque. • Adjust the caster pivot bearings. • Check the parking brake adjustment. • Change the hydraulic filter and reservoir hydraulic fluid when using Toro® HYPR-OIL™ 500 hydraulic fluid (more often in dirty or dusty conditions).
Monthly	• Check the battery.

Maintenance Service Interval	Maintenance Procedure
Yearly	• Grease the front-caster pivots. • Grease the rear-caster hub. • Grease the pump-belt idler arm. • Grease the PTO-belt idler arm. (more often in dirty or dusty conditions). • Grease the rear-caster pivot. (more often in dirty or dusty conditions). • Lubricate the caster wheel hubs.
Yearly or before storage	• Paint chipped surfaces. • Check all maintenance procedures listed above before storage.

Important: **Refer to your engine operator's manual for additional maintenance procedures.**

⚠ CAUTION

If you leave the key in the ignition switch, someone could accidently start the engine and seriously injure you or other bystanders.

Remove the key from the ignition before you do any maintenance.

Lubrication

Lubricating the Machine

Greasing the Machine

Service Interval: Before each use or daily—Grease the front caster wheel hubs.

Every 40 hours—Grease the drive shaft.

Every 100 hours—Grease the mower deck flip-up pivot.

Every 100 hours—Grease the mower deck push-arm tubes.

Yearly—Grease the front-caster pivots.

Yearly—Grease the rear-caster hub.

Yearly—Grease the pump-belt idler arm.

Yearly—Grease the PTO-belt idler arm. (more often in dirty or dusty conditions).

Yearly—Grease the rear-caster pivot. (more often in dirty or dusty conditions).

Grease more frequently when operating conditions are extremely dusty or sandy.

Grease Type: No. 2 lithium or molybdenum grease

1. Disengage the PTO, stop the machine, shut off the engine, remove the key, and wait for all moving parts to stop before leaving the operating position.
2. Clean the grease fittings with a rag. Make sure to scrape any paint off the front of the fitting(s).
3. Connect a grease gun to the fitting. Pump grease into the fittings until grease begins to ooze out of the bearings.
4. Wipe up any excess grease.

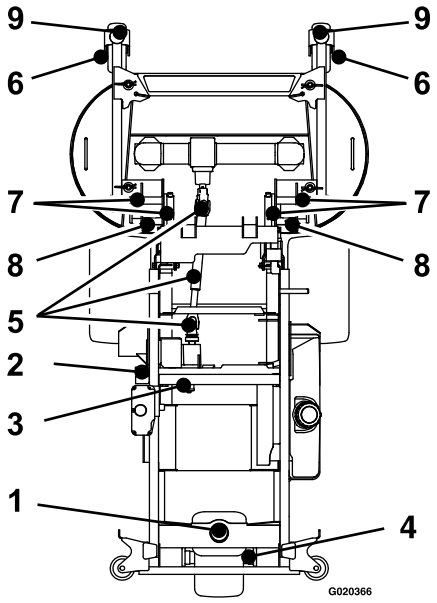

Figure 29

1. Rear-caster pivot—grease yearly
2. PTO belt idler arm—grease yearly
3. Pump belt idler arm—grease yearly
4. Rear-caster hub—grease yearly
5. Drive shaft—grease every 40 hours
6. Front-caster wheel hub—grease every 8 hours
7. Deck flip-up pivot—grease every 100 hours
8. Push-arm tubes—grease every 100 hours
9. Front-caster pivots—grease yearly

Lubricate the Pump Belt Idler Arm

1. Raise up the hopper (Figure 30).

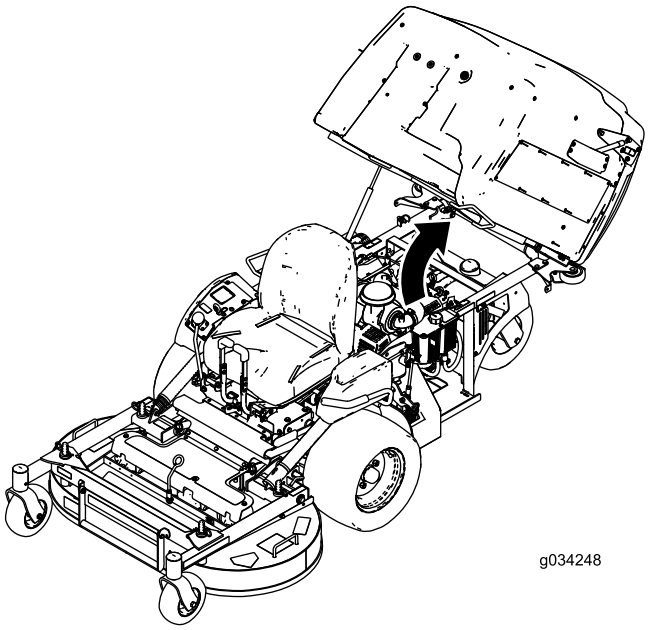

Figure 30

2. Loosen the bolt holding the air cleaner.
3. Loosen the clamp holding the hose and remove the air-cleaner (Figure 31).

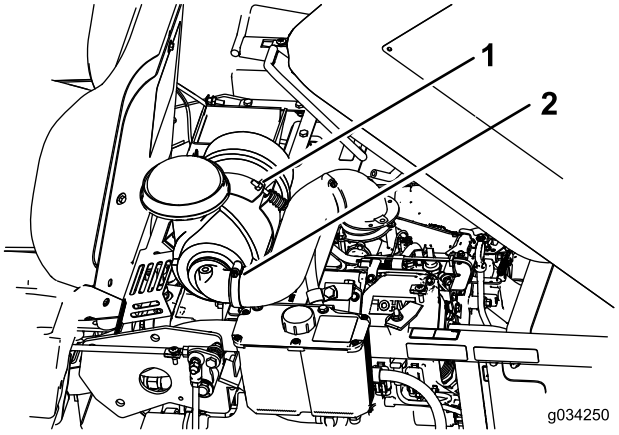

Figure 31

1. Bolt
2. Clamp

4. Remove the bolts and the plate below the air cleaner.

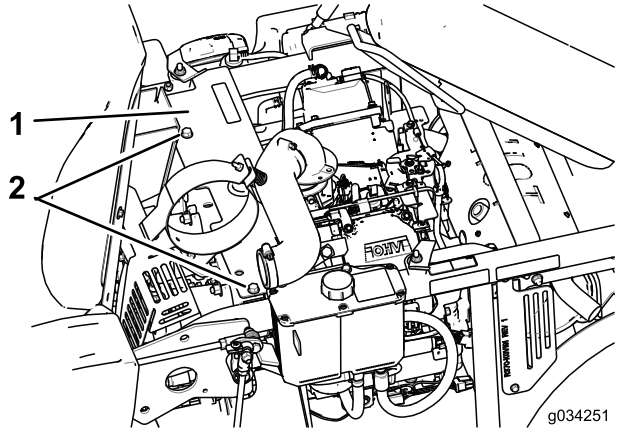

Figure 32

1. Plate
2. Bolts

5. Lubricate the pump belt idler arm (Figure 29).
6. Install the plate and the air cleaner.

Lubricate the Rear Caster Wheel Hub

Service Interval: Yearly

1. Shut off the engine, wait for all moving parts to stop, and remove the key. Engage the parking brake.

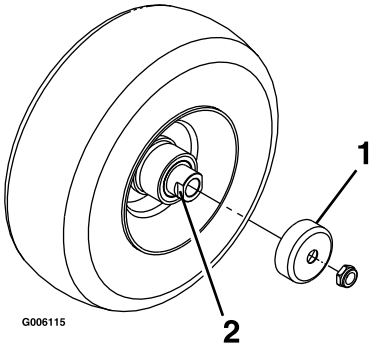

Figure 33

1. Seal guard
2. Spacer nut with wrench flats

2. Raise the front of the machine up and support it with jack stands.
3. Remove the caster wheel from the caster forks.
4. Remove the seal guards from the wheel hub.
5. Remove 1 of the spacer nuts from the axle assembly in the caster wheel.

   Note: Note that thread locking adhesive has been applied to lock the spacer nuts to the axle. Remove the axle (with the other spacer nut still assembled to it) from the wheel assembly.
6. Pry out the seals, and inspect the bearings for wear or damage and replace if necessary.
7. Pack the bearings with a general-purpose grease.
8. Insert 1 bearing and 1 new seal into the wheel.

Note: The seals must be replaced.

9. If the axle assembly has had both spacer nuts removed (or broken loose), apply a thread locking adhesive to 1 spacer nut and thread it onto the axle with the wrench flats facing outward.

   Note: Do not thread the spacer nut all of the way onto the end of the axle. Leave approximately 3 mm (1/8 inch) from the outer surface of the spacer nut to the end of the axle inside the nut.

10. Insert the assembled nut and axle into the wheel on the side of the wheel with the new seal and bearing.
11. With the open end of the wheel facing up, fill the area inside the wheel around the axle full of general-purpose grease.
12. Insert the second bearing and new seal into the wheel.
13. Apply a thread locking adhesive to the second spacer nut and thread it onto the axle with the wrench flats facing outward.
14. Torque the nut to 8 to 9 N-m (75 to 80 in-lb), loosen, then re-torque to 2 to 3 N-m (20 to 25 in-lb).

    Note: Make sure that the axle does not extend beyond either nut.

15. Install the seal guards over the wheel hub and insert the wheel into the caster fork. Install the caster bolt and tighten the nut fully.

Important: To prevent seal and bearing damage, check the bearing adjustment often. Spin the caster tire. The tire should not spin freely (more than 1 or 2 revolutions) or have any side play. If the wheel spins freely, adjust the torque on the spacer nut until there is a slight amount of drag. Apply thread locking adhesive.

Lubricate the Brake-Handle Pivot

Service Interval: Every 160 hours

1. Shut off the engine, wait for all moving parts to stop, remove the key, and engage the parking brake.
2. Lubricate the bronze bushings on the brake handle pivot with a spray type lubricant or light oil (Figure 34).

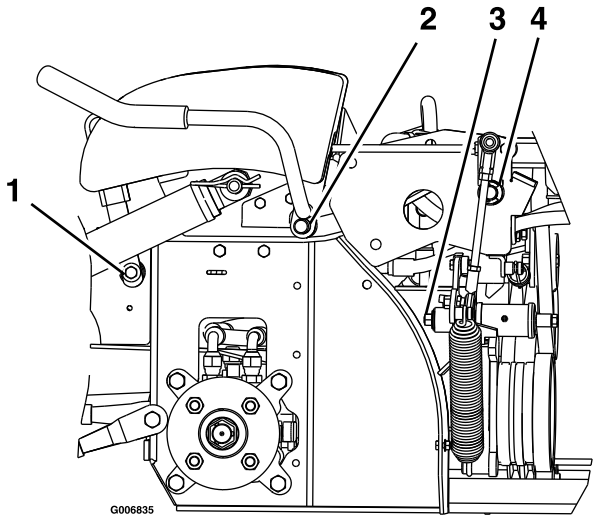

Figure 34

Left Side of machine shown

1. Brake-handle pivot
2. PTO-handle pivot
3. Spring-arm pivot
4. Toggle pivot

Lubricate the Brake-Rod Bushings

Service Interval: Every 160 hours

1. Shut off the engine, wait for all moving parts to stop, remove the key, and engage the parking brake.
2. Unlatch the seat and tilt the seat up. Refer to Unlatching the Seat (page 22).
3. Lubricate the bronze bushings on each end of the brake rod shaft with a spray type lubricant or a light oil (bushings are located to the inside of the flange bearings).

Lubricate the Steering-Linkage-Rod Ends

Service Interval: Every 160 hours

1. Shut off the engine, wait for all moving parts to stop, remove the key, and engage the parking brake.
2. Unlatch the seat and tilt the seat up. Refer to Unlatching the Seat (page 22).
3. Lubricate each end of the steering linkage rods with a spray lubricant or a light oil.

Change the Gearbox Oil

Service Interval: After the first 50 hours—Change oil in all 3 gearbox housings. Add oil as needed until level with oil-drain plug.

Every 100 hours—Change oil in all 3 gearbox housings. Add oil as needed until it is level with the oil-drain plug.

1. Place the machine on a level surface.
2. Shut off the engine, wait for all moving parts to stop, remove the key, and engage the parking brake.
3. Remove the gearbox and drive shaft assembly from the mower deck. Retain the hardware for use later.
4. Remove the large oil drain plug on the front of each of the three gearbox sections and drain the oil (Figure 35).

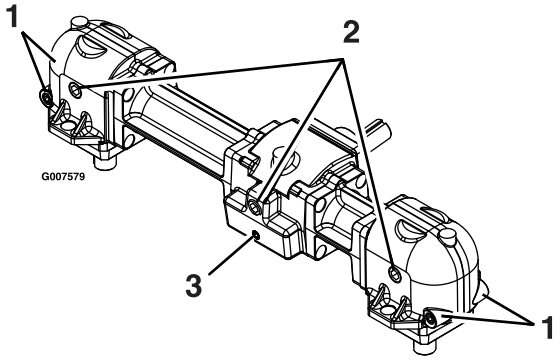

Figure 35

1. Small magnetic plugs (front and back)
2. Large oil drain/fill plug
3. Small magnetic plug (front only)

5. Remove the small magnetic plugs and wipe away any material accumulated on the plugs.
6. Apply a Teflon® pipe sealant to all small magnetic plugs and install them into the gearbox.
7. Install the gearbox and drive shaft assembly to the mower deck.
8. Fill the gearbox with Mobil® SHC (synthetic) 75W-90 gear lube oil until level with oil drain/fill plug.

   Note: Each of the gearbox sections must be filled separately.

   Note: Keep the mower deck level to the ground when filling the gearbox with oil. Do not fill the gearbox with the mower deck raised in the service position.
9. Apply a Teflon pipe sealant to the 3 large oil plugs and install them into the gearbox.

Engine Maintenance

⚠ WARNING

Contact with hot surfaces may cause personal injury.

Keep hands, feet, face, clothing, and other body parts away the muffler and other hot surfaces.

Servicing the Air Cleaner

Service Interval: Every 150 hours

Every 250 hours/Yearly (whichever comes first)—Replace the primary air filter and check the safety air filter (more often in dusty or sandy conditions).

Every 500 hours—Replace the safety air filter.

Note: Check the filters more frequently if the operating conditions are extremely dusty or sandy.

Removing the Filters

1. Move the speed control lever to the NEUTRAL position to stop the machine.
2. Disengage the PTO, engage the parking brake, stop the engine, and wait for all moving parts to stop.
3. For access to the bottom latch, remove the bolt, open the clamp, and raise the air cleaner (Figure 36).

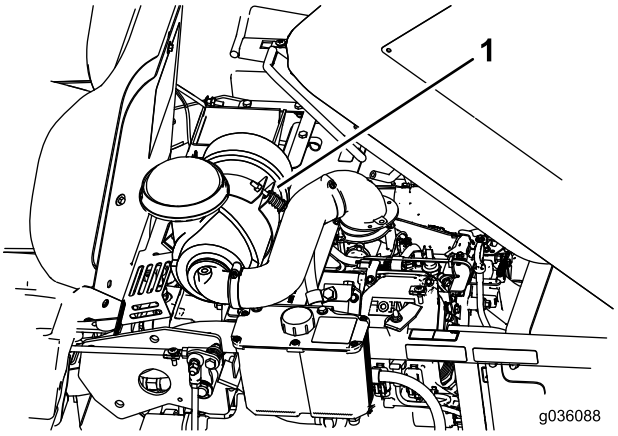

Figure 36

1. Bolt and clamp

4. Release the latches on the air cleaner and pull the air-cleaner cover off the air-cleaner body (Figure 37).
5. Clean the inside of the air-cleaner cover with compressed air.
6. Gently slide the primary filter out of the air-cleaner body (Figure 37).

   Note: Avoid knocking the filter into the side of the body.

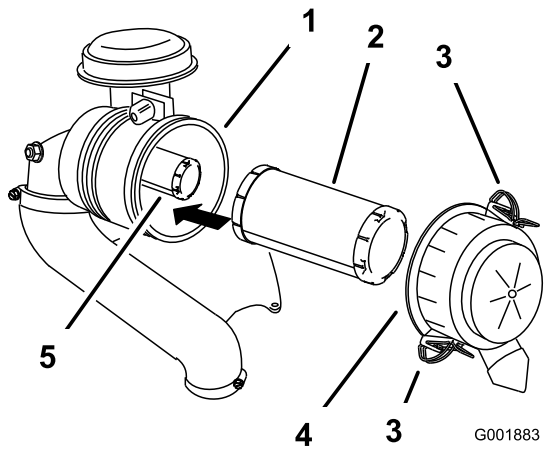

Figure 37

1. Air-cleaner body
2. Primary filter
3. Latch
4. Air-cleaner cover
5. Safety filter

7. Remove the safety filter only if you intend to replace it.

   Important: Do not attempt to clean the safety filter. If the safety filter is dirty, then the primary filter is damaged. Replace both filters.

8. Inspect the primary filter for damage by looking into the filter while shining a bright light on the outside of the filter. Holes in the filter will appear as bright spots. If the filter is damaged, discard it.

Servicing the Primary Filter

- If the primary filter is dirty, bent, or damaged, replace it.
- Do not clean the primary filter.

Servicing the Safety Filter

Replace the safety filter, never clean it.

Important: Never attempt to clean the safety filter. If the safety filter is dirty, then the primary filter is damaged. Replace both filters.

Installing the Filters

Important: To prevent engine damage, always operate the engine with both air filters and cover installed.

1. If installing new filters, check each filter for shipping damage. Do not use a damaged filter.
2. If the inner filter is being replaced, carefully slide it into the filter body (Figure 37).
3. Carefully slide the primary filter over the inner filter (Figure 37).

   Note: Ensure that the primary filter is fully seated by pushing on its outer rim while installing it.

   Important: Do not press on the soft inside area of the filter.

4. Install the air cleaner cover and secure the latches (Figure 37).
5. Install the air cleaner into the clamp and secure it with the previously removed bolt (Figure 36).

Servicing the Engine Oil

Oil Type: Detergent oil (API service class SJ or higher)

Oil Capacity: with a filter change, 1.8 L (1.9 US qt); with no filter change, 1.6 L (1.7 US qt)

Viscosity: See the table below.

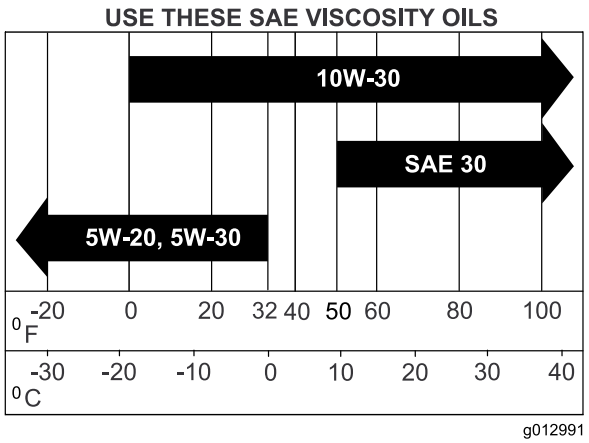

Figure 38

Checking the Engine-Oil Level

Service Interval: Before each use or daily

Note: Check the oil when the engine is cold.

⚠ WARNING

Contact with hot surfaces may cause personal injury.

Keep hands, feet, face, clothing and other body parts away from the muffler and other hot surfaces.

Important: Do not overfill the crankcase with oil because damage to the engine may result. Do not run engine with oil below the low mark because the engine may be damaged.

1. Move the speed-control lever to the NEUTRAL position to stop the machine.
2. Disengage the PTO, engage the parking brake, shut off the engine, and wait for all moving parts to stop.
3. Allow the engine to cool.
4. Raise the hopper
5. Clean the area around the dipstick (Figure 39).
6. Remove the dipstick and wipe off the oil.
7. Insert the dipstick and push it all the way down into the tube.
8. Remove the dipstick and read the oil level.
9. If the oil level is low, wipe off the area around the oil fill cap, remove cap and fill to the **full** mark on the dipstick (Figure 39). Do not overfill.

Important: Do not operate the engine with the oil level below the low (or add) mark on the dipstick, or over the Full mark.

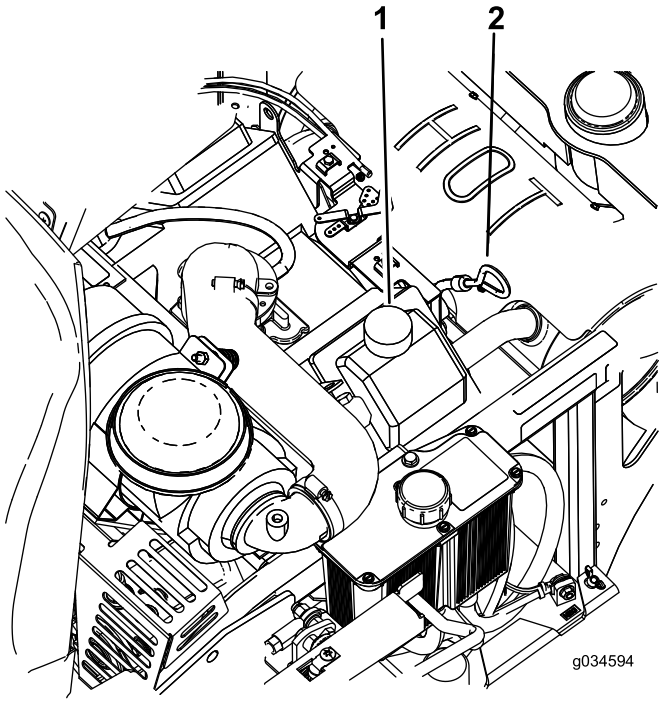

Figure 39

1. Oil-fill cap
2. Oil dipstick

Changing the Engine Oil

Service Interval: Every 100 hours (more often in dirty or dusty conditions).

Note: Dispose of the used oil at a recycling center.

1. Park the machine so that the rear is slightly lower than the front to ensure that the oil drains completely.
2. Move the speed control lever to the NEUTRAL position to stop the machine.
3. Disengage the PTO, engage the parking brake, shut off the engine, and wait for all moving parts to stop.

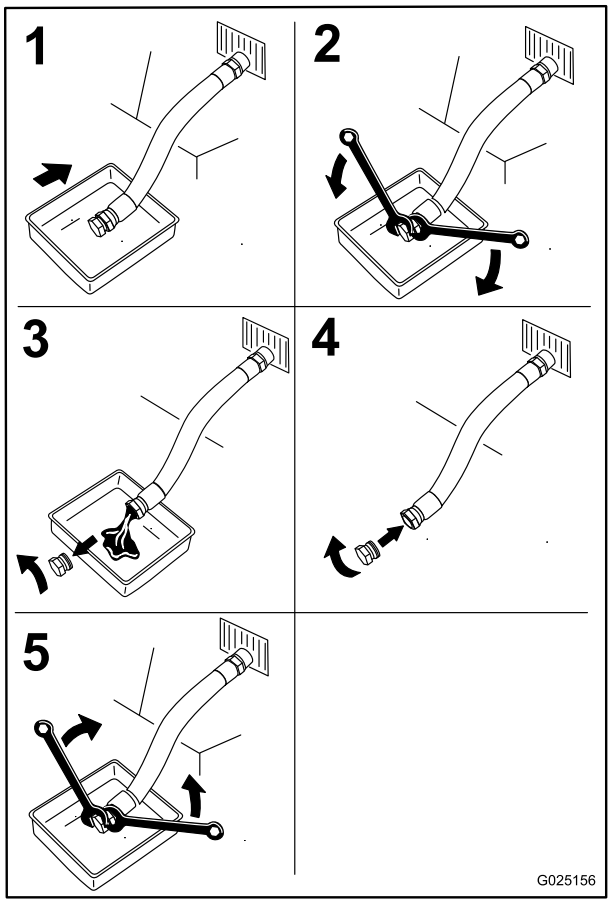

Figure 40

4. Slowly pour approximately 80% of the specified oil into the filler tube and slowly add the additional oil to bring it to the **full** mark on the dipstick (Figure 39).
5. Start the engine and drive to a flat area. Check the oil level again (Figure 39).
6. If needed, add oil to the Full mark on the dipstick.

Changing the Engine-Oil Filter

Service Interval: Every 200 hours

Note: Change the engine oil filter more frequently when operating conditions are extremely dusty or sandy.

1. Drain the oil from the engine; refer to Changing the Engine Oil (page 36).
2. Change the engine oil filter (Figure 41).

   Note: Allow 2 minutes for the new oil to be absorbed by the new filter material.

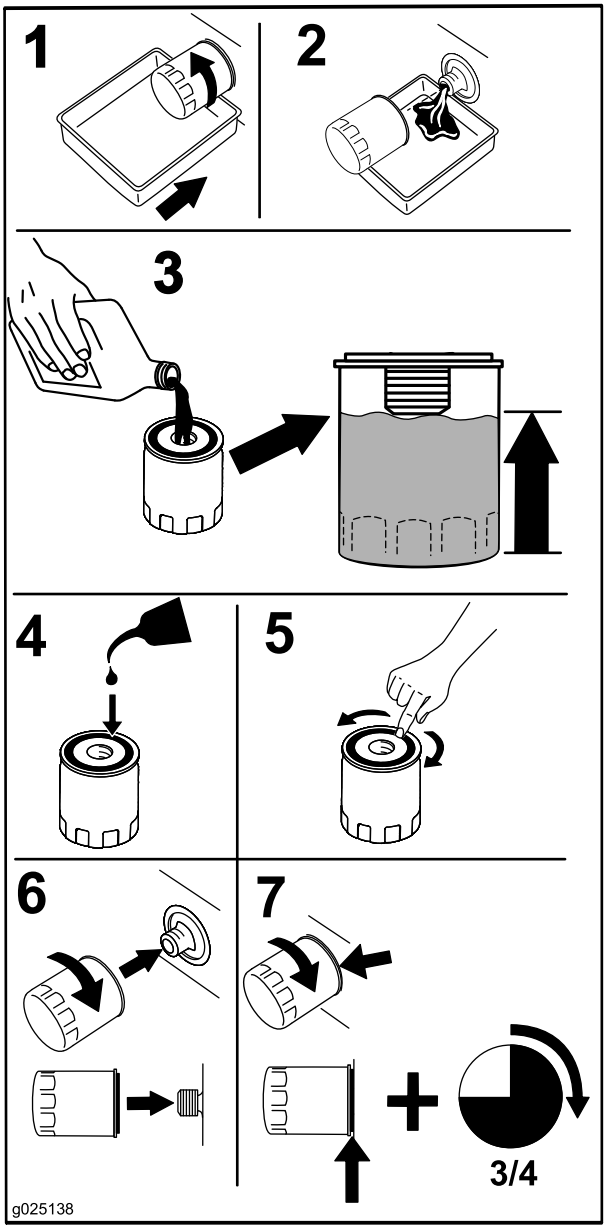

Figure 41

3. Fill the crankcase with the proper type of new oil; refer to Checking the Engine-Oil Level (page 35).

Servicing the Spark Plugs

Service Interval: Every 500 hours—Check and gap the spark plug.

Make sure that the air gap between the center and side electrodes is correct before installing the spark plugs. Use a spark-plug wrench for removing and installing the spark plugs and a gapping tool/feeler gauge to check and adjust the air gap. Install new spark plugs if necessary.

Type: Champion® RC12YC or equivalent

Air Gap: 0.76 mm (0.030 inch)

Removing the Spark Plugs

1. Move the speed control lever to the neutral position to stop the machine.
2. Disengage the PTO, engage the parking brake, stop the engine, and wait for all moving parts to stop.
3. Remove the spark plugs.

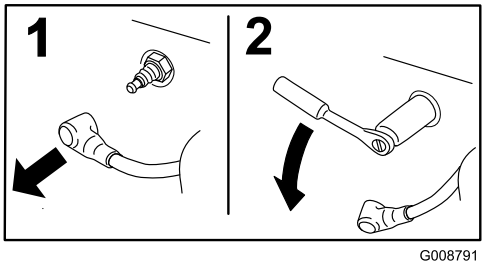

Figure 42

Checking the Spark Plugs

Important: Replace the spark plugs when they have a black coating, worn electrodes, an oily film, or cracks.

If you see light brown or gray on the insulator, the engine is operating properly. A black coating on the insulator usually means that the air cleaner is dirty.

Set the gap to 0.76 mm (0.030 inch).

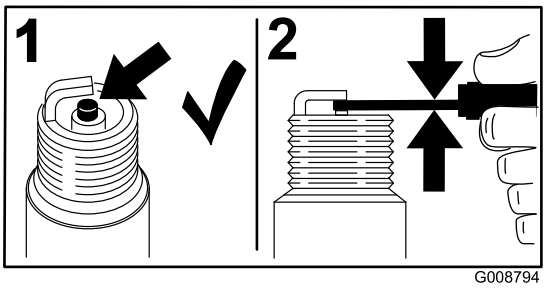

Figure 43

Installing the Spark Plugs

Tighten the spark plugs to 24.4 to 29.8 N-m (18 to 22 ft-lb).

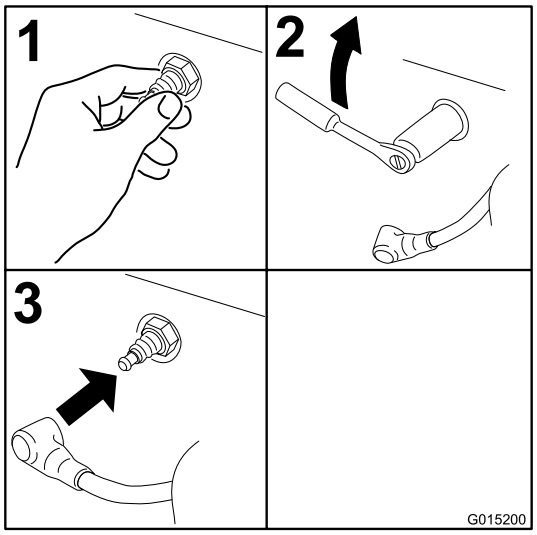

Figure 44

Fuel System Maintenance

⚠ WARNING

Fuel system components are under high pressure. The use of improper components can result in system failure, gasoline leakage, and possible explosion.

Use only approved fuel lines and fuel filters.

Replacing the Fuel Filter

Service Interval: Every 200 hours/Yearly (whichever comes first) (more often in dirty or dusty conditions).

The fuel filter is located near the engine on the front or rear side of the engine.

1. Move the speed-control lever to the NEUTRAL position to stop the machine.
2. Disengage the PTO, engage the parking brake, shut off the engine, and wait for all moving parts to stop.
3. Allow the machine to cool down (Figure 45).

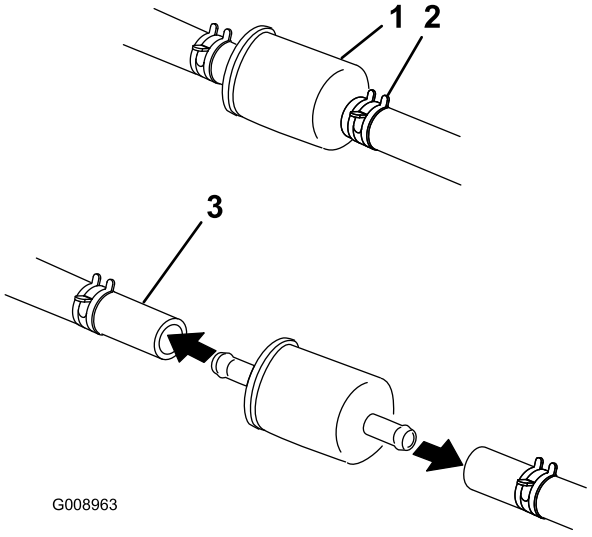

Figure 45

1. Fuel filter
2. Hose clamp
3. Fuel line

4. Squeeze the ends of the hose clamps together and slide them away from the filter (Figure 45).
5. Remove the filter from the fuel lines.

6. Install a new filter and move the hose clamps close to the filter (Figure 45).

Note: Install the fuel line hoses and secure them with plastic ties the same as they were originally installed at the factory to keep the fuel line away from components that could damage the fuel line.

Servicing the Fuel Tank

Do not attempt to drain the fuel tank. Have an Authorized Service Dealer drain the fuel tank.

Electrical System Maintenance

Servicing the Battery

Service Interval: Monthly

⚠ DANGER

Battery electrolyte contains sulfuric acid, which is a deadly poison and causes severe burns.

Do not drink electrolyte and avoid contact with skin, eyes, or clothing. Wear safety glasses to shield your eyes and rubber gloves to protect your hands.

Removing the Battery

⚠ WARNING

Battery terminals or metal tools could short against metal machine components causing sparks. Sparks can cause the battery gases to explode, resulting in personal injury.

- **When removing or installing the battery, do not allow the battery terminals to touch any metal parts of the machine.**
- **Do not allow metal tools to short between the battery terminals and metal parts of the machine.**

⚠ WARNING

Incorrect battery cable routing could damage the machine and cables causing sparks. Sparks can cause the battery gases to explode, resulting in personal injury.

- **Always disconnect the negative (black) battery cable before disconnecting the positive (red) cable.**
- **Always connect the positive (red) battery cable before reconnecting the negative (black) cable.**

1. Move the speed control lever to the NEUTRAL position to stop the machine.
2. Disengage the PTO, engage the parking brake, stop the engine, and wait for all moving parts to stop.
3. First disconnect the negative battery cable (black) from the negative (black) battery terminal (Figure 46).
4. Slide the red terminal boot off the positive (red) battery terminal and remove the positive (red) battery cable (Figure 46).
5. Remove the wing nuts securing the J-hooks (Figure 46).
6. Remove the clamp (Figure 46).

7. Remove the battery.

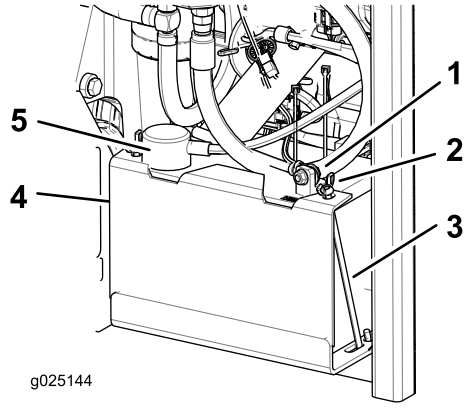

Figure 46

1. Negative (black) battery cable
2. Wing nut
3. J-hook
4. Clamp
5. Positive (red) battery cable

Installing the Battery

1. Position battery in the tray with the terminal posts opposite from the hydraulic tank (Figure 46).
2. First, install the positive (red) battery cable to positive battery terminal.
3. Then install the negative (black) battery cable and ground wire to the negative battery terminal.
4. Secure the cables with 2 bolts, 2 washers, and 2 locknuts (Figure 46).
5. Slide the red terminal boot onto the positive (red) battery post.
6. Install the clamp and secure it with the wing nuts and J-hooks (Figure 46).

Charging the Battery

⚠ WARNING

Charging the battery produces gases that can explode.

Never smoke near the battery and keep sparks and flames away from battery.

Important: Always keep the battery fully charged (1.265 specific gravity). This is especially important to prevent battery damage when the temperature is below 0°C (32°F).

1. Charge battery for 10 to 15 minutes at 25 to 30 A or 30 minutes at 10 A.
2. When the battery is fully charged, unplug the charger from the electrical outlet; then disconnect the charger leads from the battery posts (Figure 47).
3. Install the battery in the machine and connect the battery cables, refer to Installing the Battery (page 40).

Note: Do not run the machine with the battery disconnected; electrical damage may occur.

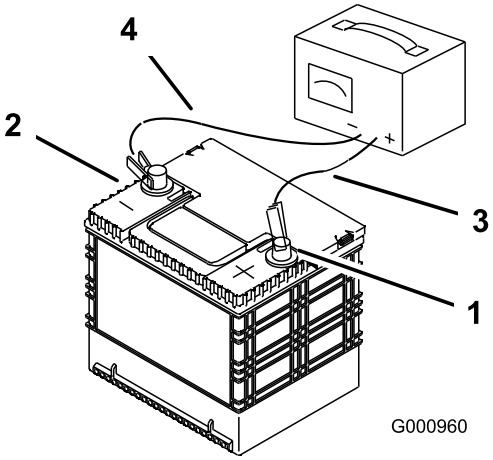

Figure 47

1. Positive battery post
2. Negative battery post
3. Red (+) charger lead
4. Black (-) charger lead

Servicing the Fuses

The electrical system is protected by fuses. It requires no maintenance; however, if a fuse blows, check the component/circuit for a malfunction or short.

1. The fuses are located on right side behind the seat.
2. To replace the fuses, pull out the fuse to remove it.
3. Install a new fuse.

Adjusting the Safety Switches

Adjust all safety switches so the plunger extends 4.8 mm to 6.4 mm (3/16 inch to 1/4 inch) from switch body when plunger is compressed (Figure 48).

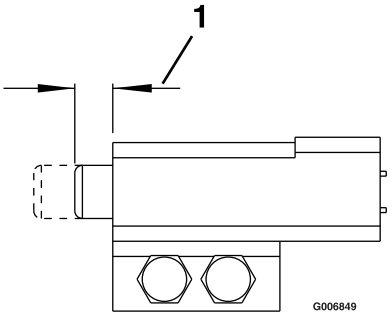

Figure 48

Jump Starting the Machine

1. Check and clean corrosion from the battery terminals before jump-starting. Ensure that the connections are tight.

⚠ CAUTION

Corrosion or loose connections can cause unwanted electrical voltage spikes at any time during the jump-starting procedure.

Do not attempt to jump-start with loose or corroded battery terminals, or damage to the engine may occur.

⚠ DANGER

Jump-starting a weak battery that is cracked or frozen, or has a low electrolyte level or an open/shorted battery cell can cause an explosion resulting in serious personal injury.

Do not jump-start a weak battery if these conditions exist.

2. Make sure that the booster battery is a good and fully charged lead-acid battery at 12.6 V or greater. Use properly sized jumper cables with short lengths to reduce voltage drop between systems. Make sure that the cables are color coded or labeled for the correct polarity.

⚠ WARNING

Batteries contain acid and produce explosive gases.

- **Shield the eyes and face from the batteries at all times.**
- **Do not lean over the batteries.**
- **Be certain of battery terminal polarity and jumper cable polarity when hooking up batteries.**

Note: Be sure that the vent caps are tight and level. Place a damp cloth, if available, over any vent caps on both batteries. Be sure the vehicles do not touch and that both electrical systems are off and at the same rated system voltage. These instructions are for negative ground systems only.

3. Connect the positive (+) cable to the positive (+) terminal of the discharged battery that is wired to the starter or solenoid as shown in Figure 49.

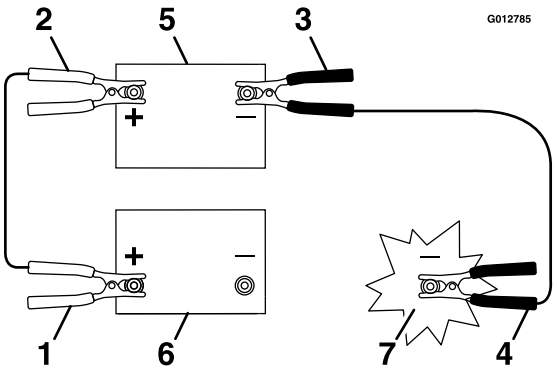

Figure 49

1. Positive (+) cable on discharged battery
2. Positive (+) cable on booster battery
3. Negative (–) cable on the booster battery
4. Negative (–) cable on the engine block
5. Booster battery
6. Discharged battery
7. Engine block

4. Connect the other end of the positive cable to the positive terminal of the booster battery.
5. Connect the black negative (–) cable to the other terminal (negative) of the booster battery.
6. **Make the final connection on the engine block of the stalled vehicle (not to the negative battery post) away from the battery and stand back.**
7. Start the vehicle and remove the cables in the reverse order of connection (the engine block (black) connection is the first to disconnect).

Drive System Maintenance

Adjusting the Tracking

The tracking knob is located under the seat.

Rotating this knob allows fine tuning adjustments so that the machine tracks straight with the drive levers in the full forward position.

1. Run the machine at 3/4 speed for at least 5 minutes to bring the hydraulic fluid up to operating temperature. Stop the machine and wait for all moving parts to stop.
2. Engage the parking brake.
3. Unlatch the seat and tilt the seat forward to gain access to the tracking knob. Refer to Unlatching the Seat (page 22).
4. Rotate the knob toward the right to steer right and rotate toward the left to steer left.
5. Adjust in 1/8 turn increments until the machine tracks straight.
6. Check and ensure the machine does not creep when it is in neutral with the parking brake disengaged (Figure 50).

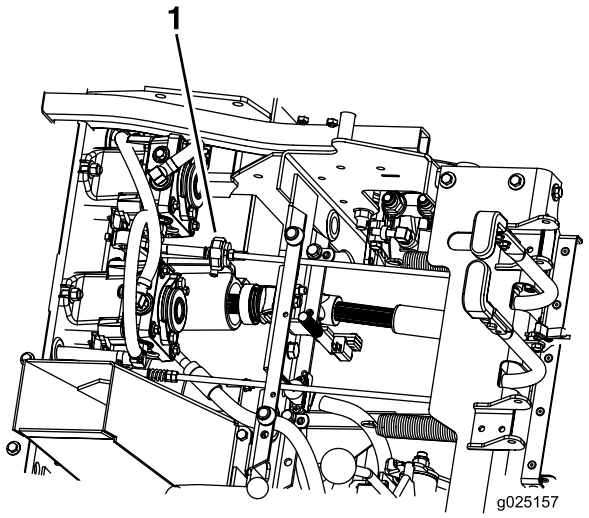

Figure 50

1. Tracking knob

Checking the Tire Pressure

Service Interval: Every 40 hours

Maintain the air pressure in the rear tires at 103 kPa (15 psi). Uneven tire pressure can cause uneven cut. Check the tires when they are cold to get the most accurate pressure reading.

Note: The rear tire is a semi-pneumatic tire and does not require air-pressure maintenance.

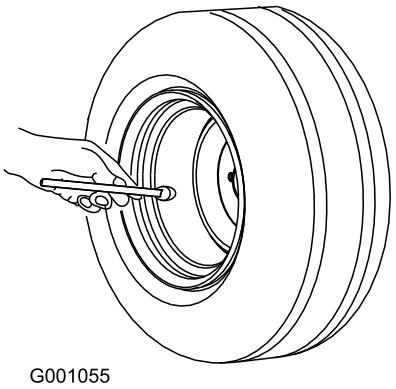

Figure 51

Note: Do not add any type of tire liner or foam fill material to the tires.

Checking the Wheel Lug Nuts

Service Interval: After the first 100 hours

Every 500 hours

Check and torque the wheel lug nuts to 122 to 129 N-m (90 to 95 ft-lb).

Checking the Wheel Hub Nuts

Service Interval: After the first 100 hours

Every 500 hours

Check and ensure that the torque of the slotted nut is 373 to 475 N-m (275 to 350 ft-lb).

Adjusting the Caster Pivot Bearings

Service Interval: Every 500 hours/Yearly (whichever comes first)

1. Move the speed control lever to the NEUTRAL position to stop the machine.
2. Disengage the PTO, engage the parking brake, stop the engine, and wait for all moving parts to stop.
3. Remove the dust cap from the caster and tighten the locknut (Figure 52 and Figure 53).
4. Tighten the locknut until the spring washers are flat and then back off a 1/4 turn to properly set the pre-load on the bearings (Figure 52 and Figure 53).

   Important: Make sure that the spring washers are installed correctly as shown in Figure 52 and Figure 53.
5. Install the dust cap.

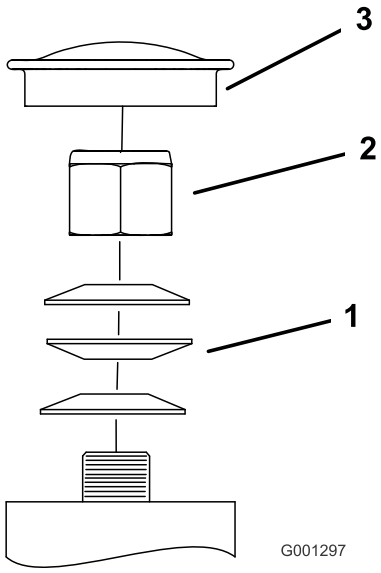

Figure 52
Front caster

1. Spring washers
2. Locknut
3. Dust cap

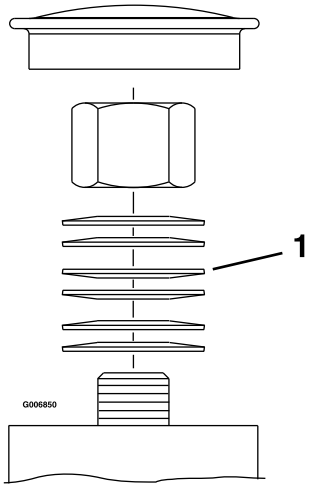

Figure 53
Rear caster

1. Spring washers

Cooling System Maintenance

Cleaning the Engine Screen and Engine-Oil Cooler

Service Interval: Before each use or daily

Remove any buildup of grass, dirt, or other debris from the oil cooler.

Before each use remove any buildup of grass, dirt, or other debris from the engine screen. This helps ensure adequate cooling and correct engine speed and reduces the possibility of overheating and damaging the engine.

Servicing the Engine-Oil Cooler

Service Interval: Every 100 hours

1. Move the speed-control lever to the NEUTRAL position to stop the machine.
2. Disengage the PTO, engage the parking brake, stop the engine, and wait for all moving parts to stop.
3. Remove the fuel tank mounting nuts and swing out the fuel tank.
4. Keep the oil cooler free of debris, by cleaning the fins with a brush.
5. Swing the fuel tank in and secure it with the mounting nuts.
6. Back the mounting nuts off a 1/2 turn to allow for tank expansion.

Cleaning the Engine Cooling Fins and Shrouds

Service Interval: Every 100 hours/Yearly (whichever comes first)

1. Move the speed-control lever to the NEUTRAL position to stop the machine.
2. Disengage the PTO, engage the parking brake, stop the engine, and wait for all moving parts to stop.
3. Remove the air intake screen and fan housing.
4. Clean the debris and grass from the engine parts.
5. Install air intake screen and fan housing.

Check and Clean the Hydraulic Pumps

Service Interval: Before each use or daily

1. Move the speed-control lever to the NEUTRAL position to stop the machine.
2. Disengage the PTO, engage the parking brake, stop the engine, and wait for all moving parts to stop.
3. Unlatch the seat and tilt the seat forward. Refer to Unlatching the Seat (page 22)
4. Clean the debris and grass from the hydraulic pumps.
5. Lower the seat.

Brake Maintenance

Adjusting the Parking Brake

Service Interval: After the first 100 hours

Every 500 hours thereafter

Follow this procedure also whenever you remove or replace a brake component.

1. Stop the machine and move the speed-control lever to the NEUTRAL position.
2. Disengage the PTO, engage the parking brake, shut off the engine, and wait for all moving parts to stop.
3. Release the parking brake.
4. Unlatch the seat and tilt the seat forward. Refer to Unlatching the Seat (page 22).
5. Check and ensure there is no slack between the park brake handle and the linkage.
6. If an adjustment is necessary, remove the clevis pin and rotate the linkage counterclockwise to lengthen or clockwise to shorten.

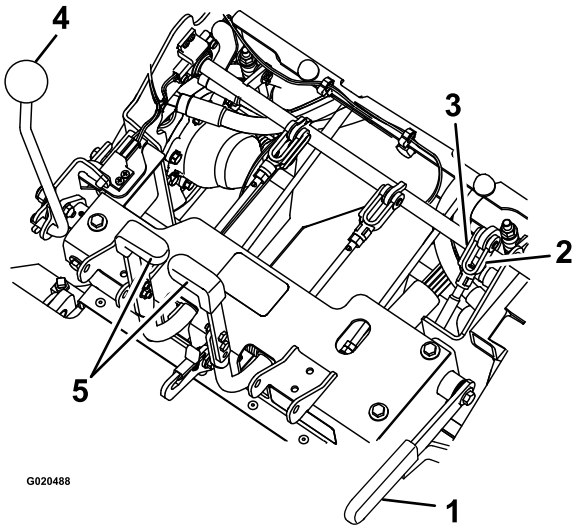

Figure 54

1. Parking brake
2. Rotate yoke
3. Clevis pin
4. Speed control lever
5. Steering levers

7. Measure the compressed spring length on both vertical spring assemblies. The spring should measure between 6 to 7 cm (2.35 to 2.85 inches). If necessary, adjust the nut at the top of the vertical spring assembly to achieve this distance.

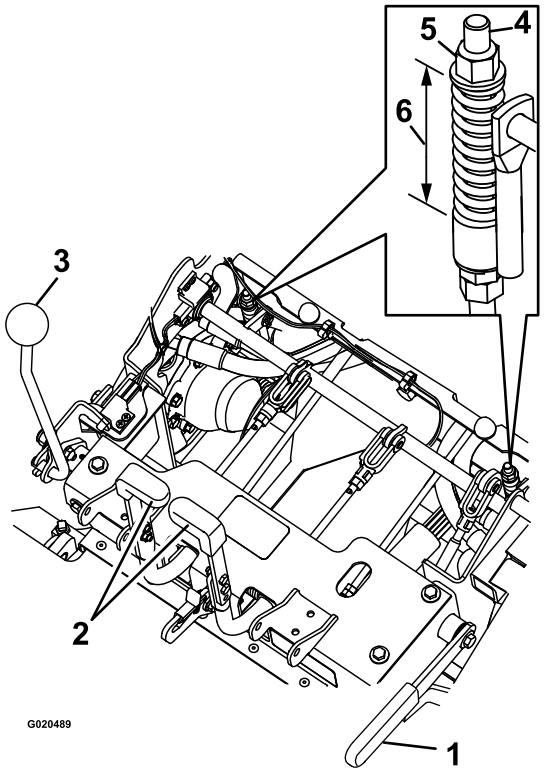

Figure 55

1. Parking brake
2. Steering lever
3. Speed control lever
4. Vertical spring assembly
5. Nut
6. 6 to 7 cm (2.35 to 2.85 inches)

8. The linkage length is adjusted with the 2 nuts at the bottom of the vertical spring assembly. The linkage should measure 22.7 to 23.3 cm (8.92 to 9.16 inches).

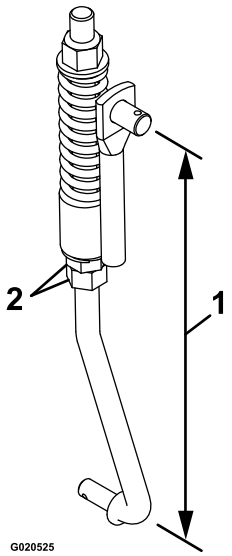

Figure 56

1. 22.7 to 23.3 cm (8.92 to 9.16 inches)
2. Nuts

9. Engage and disengage the brakes to check for proper engagement and disengagement. Adjust them if necessary.

   Note: When the brakes are disengaged, there should be little to no free play in the brake linkage with no dragging in the brakes.

Belt Maintenance

Inspecting the Belts

Service Interval: Every 40 hours

1. Stop the machine and move the speed-control lever to the NEUTRAL position.
2. Disengage the PTO, engage the parking brake, stop the engine, and wait for all moving parts to stop.
3. Tilt the hopper up and check the pump and PTO drive belts for wear, cracking, or contamination.

   Note: The belts are spring tensioned; no adjustment is necessary unless you replace the belts.

Replacing the PTO Belts

1. Stop the machine and move the speed-control lever to the NEUTRAL position.
2. Disengage the PTO, engage the parking brake, stop the engine, and wait for all moving parts to stop.
3. With the engine off, engage the PTO lever, then remove the hairpin and clevis pin at the bottom of the PTO brake band.
4. Rotate the brake band upward out of the way of the belts keeping clear of the belt drive.
5. Disengage the PTO lever.
6. Loosen belt guides **A** and **B** (Figure 57).
7. Remove the belts.
8. Route the new belts onto the pulleys as shown in Figure 57.

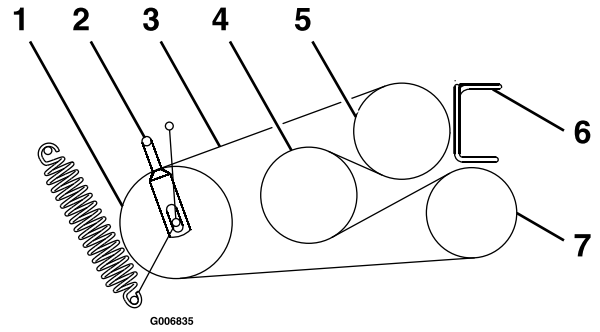

Figure 57

1. Idler
2. Belt guide **B**
3. PTO belt
4. Jackshaft
5. Engine
6. Belt guide **A**
7. Blower

9. Engage the PTO lever.
10. Rotate the brake band down into the original position.
11. Install clevis pin and hairpin to secure brake band.
12. Engage the PTO lever.
13. Loosen the jam nuts and adjust the linkage until the top of the idler arm is aligned with the bottom of the notch on the tension arm as shown in Figure 58.

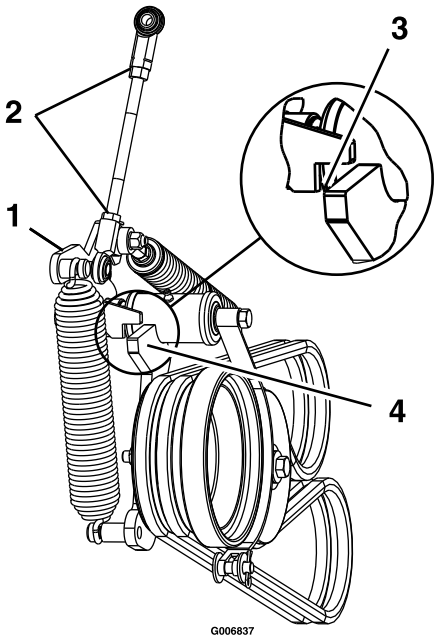

Figure 58

1. Tension arm
2. Loosen jam nuts
3. When PTO is engaged, align top of idler arm with bottom of notch on tension arm, as shown.
4. Idler arm

14. Tighten the jam nuts and disengage the PTO lever.
15. Engage PTO lever and check the alignment.
16. Check and adjust the belt guides as stated in Adjusting the Belt Guides (page 47).

Replacing the Pump Drive Belt

1. Stop the machine and move the speed-control lever to the NEUTRAL position.
2. Disengage the PTO, engage the parking brake, stop the engine, and wait for all moving parts to stop.
3. Remove the PTO belts; refer to Replacing the PTO Belts (page 46).
4. Pull spring idler or remove spring to relieve the tension on the pump drive belt.
5. Remove the old belt.
6. Route the new belt onto the pulleys as shown in the decal located on the back of the left drive shield (Figure 59).

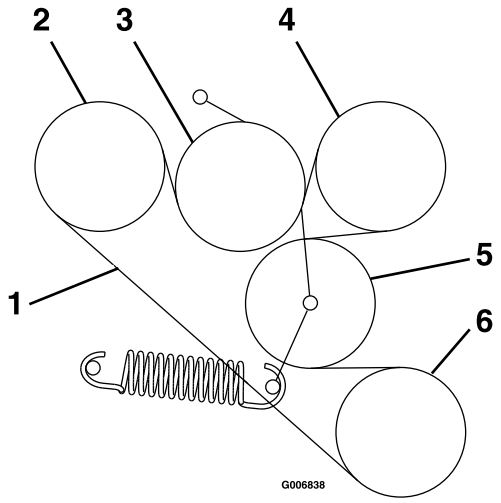

Figure 59

1. Pump drive belt
2. Pump
3. Idler
4. Pump
5. Idler
6. Engine

7. Install the PTO belts as stated in Replacing the PTO Belts (page 46).

Adjusting the Belt Guides

1. Stop the machine and move the speed-control lever to the NEUTRAL position.
2. Disengage the PTO, engage the parking brake, shut off the engine, and wait for all moving parts to stop.
3. Engage the PTO lever.
4. Adjust belt guides as shown in Figure 60.

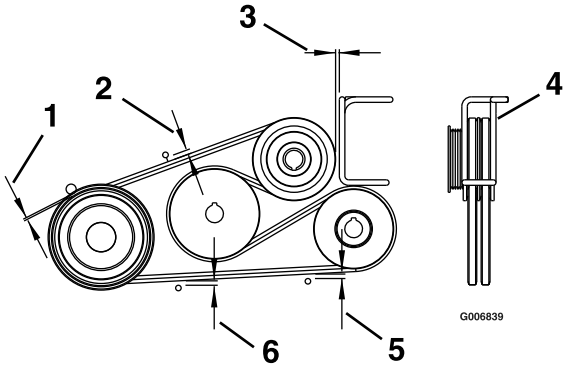

Figure 60

1. 3 mm (1/8 inch)
2. 11 mm (7/16 inch)
3. 3 mm (1/8 inch) Clearance
4. Rotate wireform guide to center belts in guide.
5. 6 mm (1/4 inch)
6. 8 mm (5/16 inch)

Controls System Maintenance

Adjusting the Reverse-Stop Rod

1. Stop the machine and move the speed-control lever to the NEUTRAL position.
2. Disengage the PTO, engage the parking brake, shut off the engine, and wait for all moving parts to stop.
3. Check the movement of the steering levers as follows:
   - If the levers move slightly forward up to 3 mm (1/8 inch) then no adjustment is necessary.
   - If the levers do not move, then proceed with the following steps:
     A. Unlatch the seat and flip up the seat up or remove the seat frame assembly (with the seat attached) to obtain a clear view of the steering control shaft to complete this adjustment.
     B. Place the speed-control lever in the NEUTRAL position.
     C. Release the parking brake.
     D. Slightly adjust the length of the rod by loosening the jam nut and by rotating the rod.

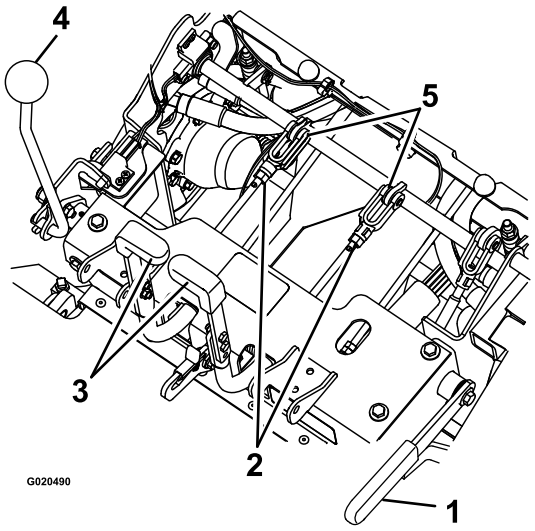

Figure 61

1. Parking brake
2. Nut
3. Steering lever
4. Speed-control lever
5. Clevis pin and stop rod

     E. Engage the parking brake and check the steering levers.

     Repeat steps C through E until up to 3 mm (1/8 inch) movement is achieved.

     F. Install the seat frame assembly, if removed in step A.

Adjusting the Speed-Control Lever Tension

1. Stop the machine and move the speed-control lever to the NEUTRAL position.
2. Disengage the PTO, engage the parking brake, shut off the engine, and wait for all moving parts to stop.
3. To adjust the tension, adjust the pivot nut which is located at the end of the motion control shaft in front of the right console (Figure 62).

   Note: Set the tension high enough that the speed control lever position is maintained during operation and loose enough to be moved comfortably by the operator.

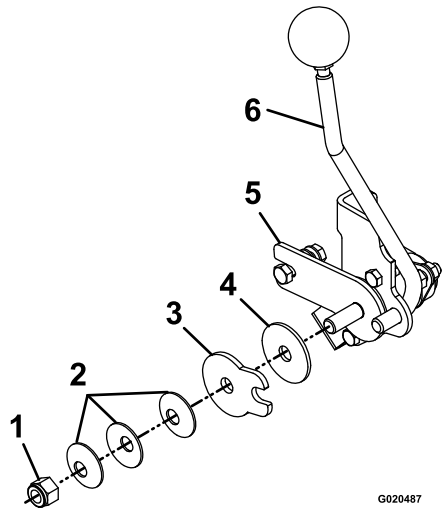

Figure 62

1. Pivot nut
2. Spring disc washers
3. Speed control friction plate
4. Friction disc
5. Speed control friction bracket
6. Speed control lever

Adjusting the Speed-Control Linkage

⚠ WARNING

Engine must be running and drive wheels must be turning so motion control adjustment can be performed. Contact with moving parts or hot surfaces may cause personal injury.

Keep fingers, hands, and clothing clear of rotating components and hot surfaces.

⚠ CAUTION

Raising the mower deck for service or maintenance relying solely on mechanical or hydraulic jacks could be dangerous. The mechanical or hydraulic jacks may not be enough support or may malfunction allowing the unit to fall, which could cause injury.

Do not rely solely on mechanical or hydraulic jacks for support. Use adequate jack stands or equivalent support.

1. Stop the machine and move the speed-control lever to the NEUTRAL position.
2. Disengage the PTO, engage the parking brake, shut off the engine, and wait for all moving parts to stop.
3. Remove the electrical connection from the seat safety switch, located directly in front of the seat switch assembly.
4. Make the neutral adjustment with the drive wheels turning. Raise the frame and place it on jack stands so that the drive wheels can rotate freely.
5. Temporarily install a jumper wire across the terminals in the connector of the wiring harness.
6. Start the engine.
7. Run the unit at least 5 minutes with the speed-control lever at full forward speed to bring hydraulic system fluid up to operating temperature.
8. Return the speed control lever to neutral (full rear) position.
9. To obtain the NEUTRAL position, adjust the left and right pump control rod linkages that connect the steering control to the pump control arms until the wheels stop, or creep slightly in reverse (Figure 63).
10. Adjust the left pump linkage by rotating the tracking adjustment knob.
11. Adjust the right pump linkage by using a wrench to turn the double nuts on the assembly (Figure 63)

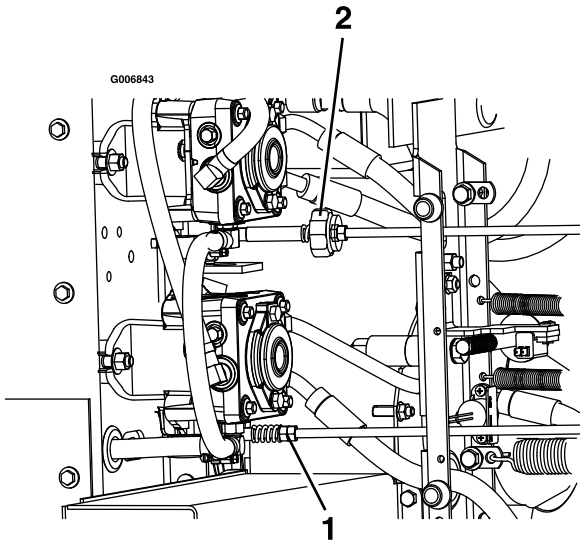

Figure 63

1. Rotate tracking knob on left side
2. Rotate double nuts on right side

12. Move the steering levers to the reverse position. While applying slight pressure to the levers, allow the steering levers to return to neutral. The wheels must stop turning or slightly creep in reverse.
13. Stop the engine and wait for all moving parts to stop.
14. Remove the jumper wire from wire harness connector and plug the connector into seat switch.
15. Lower the machine from the jackstands.

Aligning the PTO Drive Pulley

The PTO drive pulley alignment is necessary for any of the following conditions:

- When the blower is removed or replaced.
- When the engine mounting bolts are loosened or the engine is moved or replaced.
- When the jackshaft mounting bolts are loosened or the jackshaft is moved or replaced.

1. Stop the machine and move the speed-control lever to the NEUTRAL position.
2. Disengage the PTO, engage the parking brake, shut off the engine, and wait for all moving parts to stop.
3. Remove the fuel tank mounting nuts and swing out the fuel tank.
4. Verify that the blower is installed and tightly secured.
5. Loosen the 4 engine mounting bolts.
6. Unhook the pump-belt tension spring.
7. Loosen the 4 jackshaft mounting bolts.
8. Measuring from the blower pulley as a baseline, move the engine and jackshaft until the rear surface of all three pulleys are aligned within 0.8 to 1.6 mm (1/32 inch to 1/16 inch) (Figure 64).

Note: Use a straight edge to align all three surfaces.

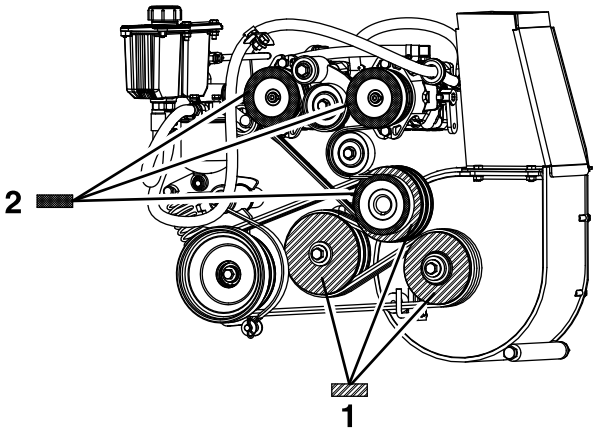

Figure 64

1. Align the three pump drive pulley surfaces shown with this pattern within 0.8 to 1.6 mm (1/32 inch to 1/16 inch).
2. Align the three PTO drive pulley surfaces shown with this pattern within 0.8 to 1.6 mm (1/32 inch to 1/16 inch).

9. Tighten the four engine mounting bolts and four jackshaft mounting bolts.
10. Check the alignment after tightening.
11. Install the pump belt tension spring.
12. Swing the fuel tank in and install tank mounting nuts.
13. Align the pump drive pulley; refer to Aligning the Pump-Drive Pulley (page 49).

Aligning the Pump-Drive Pulley

The pump drive pulley alignment is necessary for any of the following conditions:

- The engine mounting bolts have been loosened or the engine has been moved or replaced.
- The pump pulleys have been loosened, moved, or replaced.
- The PTO pulley alignment has been performed; refer to Aligning the PTO Drive Pulley (page 49).

1. Stop the machine and move the speed-control lever to the NEUTRAL position.
2. Disengage the PTO, engage the parking brake, shut off the engine, and wait for all moving parts to stop.
3. Loosen the set screws on both pump pulleys.
4. Using a straight edge, align each pump pulley with the engine pulley by sliding it along the pump shaft (Figure 64).
5. Tighten the pulley set screws and check the alignment.

Adjusting the PTO Brake Spring

The PTO brake spring adjustment is only necessary if the blower has been removed or replaced or if the PTO drive idler arm has been disassembled.

1. Stop the machine and move the speed-control lever to the NEUTRAL position.
2. Disengage the PTO, engage the parking brake, shut off the engine, and wait for all moving parts to stop.
3. Locate the brake spring and thread the 2 jam nuts out to the end of the brake spring rod (Figure 65).
4. Tighten the jam nuts together at end of the brake-spring rod.

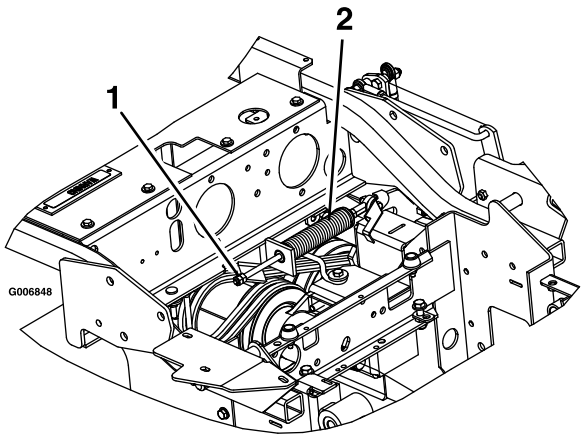

Figure 65

1. Tighten the jam nuts here
2. PTO brake-spring assembly

Adjusting the Hopper Door

1. Stop the machine and move the speed-control lever to the NEUTRAL position.
2. Disengage the PTO, engage the parking brake, shut off the engine, and wait for all moving parts to stop.
3. Loosen the 6 door hinge nuts (Figure 66).
4. Open the door and place a 3/8 inch rubber strip or 3/8 inch diameter hose between the hopper and the hopper door (Figure 66).
5. Close the door and push it tight against the hopper.
6. Tighten the hinge hardware. Open the hopper door and remove the rubber strip.

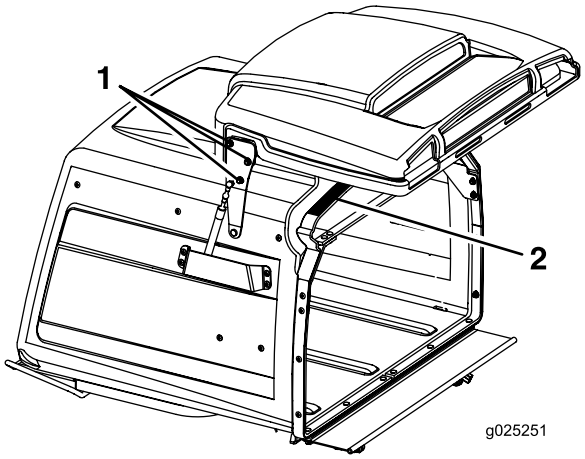

Figure 66

1. Loosen the 3 door hinge nuts on each side
2. Place a piece of 9.5 mm (3/8 inch) rubber on this surface.

Hydraulic System Maintenance

Servicing the Hydraulic System

Hydraulic Fluid Type: Toro® HYPR-OIL™ 500 hydraulic fluid or Mobil® 1 15W-50.

Important: Use fluid specified. Other fluids could cause system damage.

Checking the Hydraulic Fluid

Service Interval: Every 40 hours—Check the hydraulic fluid level.

1. Position the machine on a level surface.
2. Move the speed-control lever to the NEUTRAL position to stop the machine.
3. Disengage the PTO, engage the parking brake, shut off the engine, and wait for all moving parts to stop.
4. Allow the engine and the hydraulic system to cool for 10 minutes.

   Note: To get the correct reading, check the hydraulic fluid level when the machine is not hot.
5. Lift the hopper up.
6. Clean the area around the dipstick of the hydraulic-system reservoir (Figure 67).
7. Remove the dipstick from the hydraulic reservoir (Figure 67).

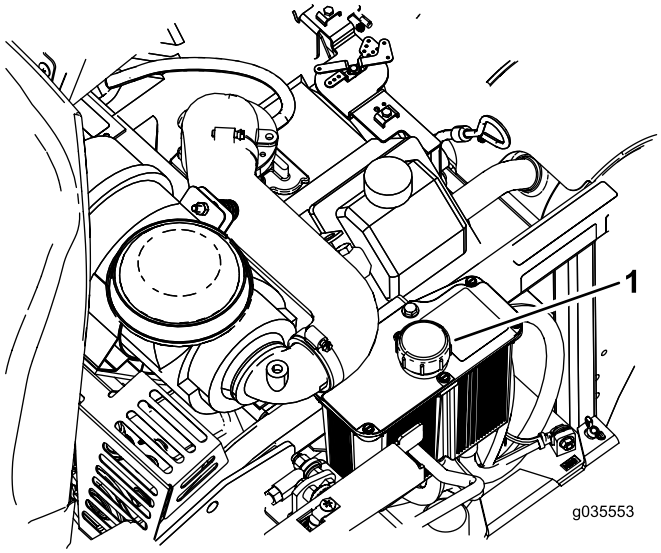

Figure 67

1. Dipstick in the hydraulic reservoir

8. Wipe the dipstick off and thread the dipstick into the reservoir.
9. Remove the dipstick and look at the end (Figure 68). If the fluid level is at the Add mark, slowly pour only enough fluid into the hydraulic reservoir to raise the level to the full line.

   Important: Do not overfill the hydraulic units with fluid as damage may occur. Do not run the machine with the fluid below the add mark.
10. Install the dipstick.

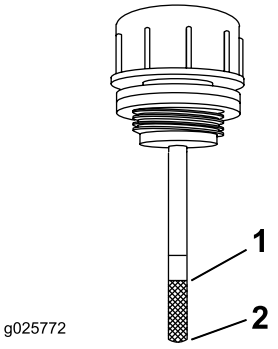

Figure 68

1. Full
2. Add

⚠ WARNING

Hydraulic oil escaping under pressure can penetrate skin and cause injury.

- **If hydraulic fluid is injected into the skin it must be surgically removed within a few hours by a doctor familiar with this type of injury. Gangrene may result if this is not done.**
- **Keep body and hands away from pin hole leaks or nozzles that eject high-pressure hydraulic fluid.**
- **Use cardboard or paper to find hydraulic leaks.**
- **Safely relieve all pressure in the hydraulic system before performing any work on the hydraulic system.**
- **Make sure that all hydraulic fluid hoses and lines are in good condition and all hydraulic connections and fittings are tight before applying pressure to hydraulic system.**

Replacing the Hydraulic Filter

Service Interval: After the first 100 hours—Change the hydraulic filter and reservoir hydraulic fluid when using any type of fluid.

Every 250 hours—Change the hydraulic filter and reservoir hydraulic fluid when using Mobil® 1 Oil (more often in dirty or dusty conditions).

Every 500 hours—Change the hydraulic filter and reservoir hydraulic fluid when using Toro® HYPR-OIL™ 500 hydraulic fluid (more often in dirty or dusty conditions).

Note: Use a summer filter when the temperature is 0° C (32° F) and above. Use a winter filter when the temperature is 0° C (32° F) and below.

1. Move the speed control lever to the NEUTRAL position to stop the machine.
2. Disengage the PTO, engage the parking brake, shut off the engine, and wait for all moving parts to stop.
3. Carefully clean the area around the filter.

   Important: Ensure that no dirt or contamination enter the hydraulic system.
4. Unscrew and remove the filter and allow the fluid to drain from the reservoir.

   Note: Do not change hydraulic system fluid (except for what can be drained when changing the filter), unless it is felt the fluid has been contaminated or been extremely hot. Changing the hydraulic fluid unnecessarily could damage the hydraulic system by introducing contaminates into the system.
5. Before installing the new filter, fill it with Toro® HYPR-OIL™ 500 hydraulic fluid and apply a thin coat of fluid on the surface of the rubber seal.
6. Turn the filter clockwise until the rubber seal contacts the filter adapter, then tighten the filter an additional 2/3 to 3/4 turn.
7. Fill the reservoir as stated in Checking the Hydraulic Fluid (page 51).
8. Raise the rear of machine up and support with jack stands (or equivalent support) just high enough to allow drive wheels to turn freely.
9. Start the engine and move the throttle control ahead to full throttle position.
10. Move the speed control levers to the full speed position and run the machine for several minutes. Shut down the machine and check the fluid level.

Mower Deck Maintenance

Leveling the Mower Deck

Setting up the Machine

Note: Ensure that the mower deck is leveled before matching the height of cut (HOC).

1. Position the machine on a flat surface.
2. Move the speed-control lever to the NEUTRAL position to stop the machine.
3. Disengage the PTO, engage the parking brake, shut down the engine, and wait for all moving parts to stop.
4. Check the tire pressure of the drive tires. If needed, adjust the pressure to 103 kPa (15 psi).

Leveling the Deck

1. Stop the machine and move the speed-control lever to the NEUTRAL position.
2. Disengage the PTO, engage the parking brake, stop the engine, and wait for all moving parts to stop.
3. Verify all hairpin cotters are in the 7.62 cm (3 inch) mower deck height holes with the spacers under the hairpin cotters (Figure 69).

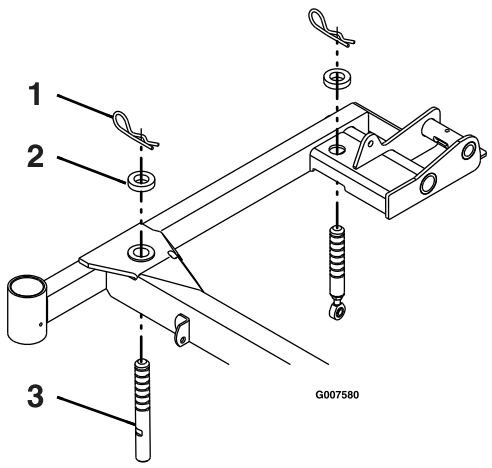

Figure 69
Right Hand Side Shown

1. Hairpin cotter
2. Spacer
3. Mower deck support pin

4. Shorten or lengthen each mower deck support pin to obtain blade tip height of 7.62 cm (3 inches) at the front of the deck and 8.26 cm (3 1/4 inches) at the rear of the deck (Figure 69).

   Note: The front pins are thread into the mower deck and have a jam nut. The rear pins have a rod end threaded into them with a jam nut.

Servicing the Cutting Blades

Maintain sharp blades throughout the cutting season, because sharp blades cut cleanly without tearing or shredding the grass blades. Tearing and shredding turns grass brown at the edges, which slows growth and increases the chance of disease.

Check the cutter blades daily for sharpness, and for any wear or damage. File down any nicks and sharpen the blades as necessary. If a blade is damaged or worn, replace it immediately with a genuine Toro replacement blade. For convenient sharpening and replacement, you may want to keep extra blades on hand.

⚠ DANGER

A worn or damaged blade can break, and a piece of the blade could be thrown toward you or bystanders, resulting in serious personal injury or death.

- **Inspect the blade periodically for wear or damage.**
- **Replace a worn or damaged blade.**

Before Inspecting or Servicing the Blades

Park the machine on a level surface, disengage the blade control switch (PTO), and set the parking brake. Turn the ignition key to the OFF position. Remove the key.

Inspecting the Blades

Service Interval: Before each use or daily

1. Lift the mower deck and secure in the raised position. Refer to Raising the Mower Deck into Service Position (page 22).
2. Inspect the cutting edges (Figure 70). If the edges are not sharp or have nicks, remove and sharpen the blades. Refer to Sharpening the Blades (page 54).
3. Inspect the blades, especially the curved area (Figure 70). If you notice any damage, wear, or a slot forming in this area (Figure 70), immediately install a new blade.

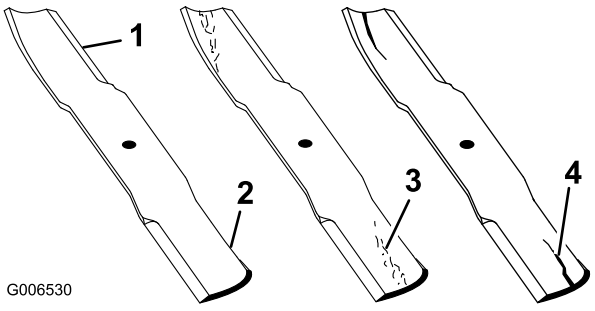

Figure 70

1. Cutting edge
2. Curved area
3. Wear/slot forming
4. Crack

4. Lower the mower deck into operating position. Refer to Lowering the Mower Deck to the Operating Position (page 23).

Checking for Bent Blades

1. Move the speed-control lever to the NEUTRAL position to stop the machine.
2. Disengage the PTO, engage the parking brake, shut off the engine, and wait for all moving parts to stop.
3. Rotate 1 blade as shown in Figure 71.
4. Measure from a level surface to the cutting edge at position **A** of the blade (Figure 71). Note this dimension.

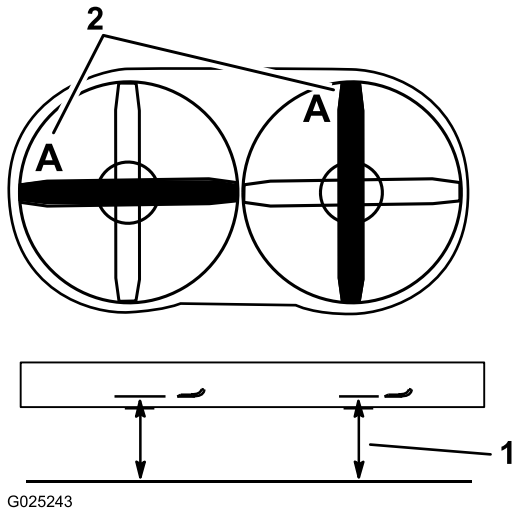

Figure 71

1. Measure here from blade to hard surface
2. Position A

5. Rotate the opposite end of the blade to position **A**.
6. Measure from a level surface to the cutting edge of the blade at the same position as in step 3 above. The difference between the dimensions obtained in steps 3 and 5 must not exceed 3 mm (1/8 inch). If this dimension exceeds 3 mm (1/8 inch), the blade is bent and must be replaced; refer to Removing the Blades (page 54) and Installing the Blades (page 55).
7. Repeat the previous steps for the opposite blade.

⚠ WARNING

A blade that is bent or damaged could break apart and could seriously injure or kill you or bystanders.

- **Always replace bent or damaged blade with a new blade.**
- **Never file or create sharp notches in the edges or surfaces of blade.**

Removing the Blades

Note: Make note of the red-colored blade position. From the normal user position, it is located on the right side.

Blades must be replaced if a solid object is hit, if the blade is out of balance or is bent. To ensure optimum performance and continued safety conformance of the machine, use genuine Toro replacement blades. Replacement blades made by other manufacturers may result in non-conformance with safety standards.

1. Lift the mower deck and secure in the raised position. Refer to Raising the Mower Deck into Service Position (page 22).
2. Hold the blade end using a rag or thickly-padded glove.
3. Remove the blade, washer, and blade bolt that secures the blade and blade driver (Figure 72).

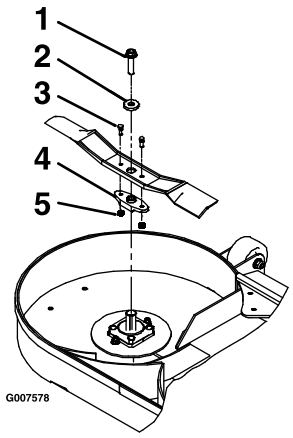

Figure 72

1. Blade bolt—torque to 115-149 N-m (85-110 ft-lb)
2. Washer
3. Shear bolts—torque to 80–100 in-lb (922-1130 N-cm)
4. Blade driver
5. Locknuts

4. Remove the blade driver from the existing blade (Figure 72).

Sharpening the Blades

⚠ WARNING

When sharpening blades, pieces of a blade could be thrown and cause serious injury.

Wear proper eye protection when sharpening blades.

1. Use a file to sharpen the cutting edge at both ends of the blade (Figure 73). Maintain the original angle. The blade retains its balance if the same amount of material is removed from both cutting edges.

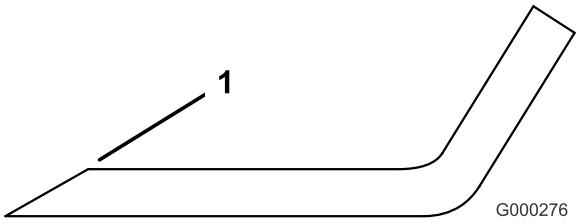

Figure 73

1. Sharpen at original angle

2. Check the balance of the blade by putting it on a blade balancer (Figure 74). If the blade stays in a horizontal position, the blade is balanced and can be used. If the blade is not balanced, file some metal off the end of the sail area only. Repeat this procedure until the blade is balanced.

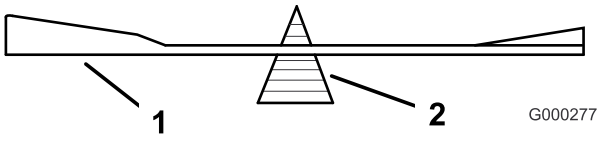

Figure 74

1. Blade
2. Balancer

Installing the Blades

Note: Determine the left and right sides of the machine from the normal operating position.

Note: Ensure that the red colored blade is installed on the right side.

1. Install the blade driver to the new blades with the shear bolts and locknuts (Figure 72).
2. Torque the shear bolts to 922 to 1,130 N·cm (80 to 100 in-lb).

   Note: The blade-driver flats must be aligned with the flats on the shaft when installing the blade on the mower deck.
3. Install the blade, washer, and blade bolt to the spindle shaft (Figure 72).
4. Torque the blade bolt to 115 to 149 N·m (85 to 110 ft-lb).
5. Lower the mower deck to the operating position. Refer to Lowering the Mower Deck to the Operating Position (page 23).

⚠ WARNING

Operating a mower deck with loose or weakened blade bolts can be dangerous. A loose or weakened blade bolt could allow a blade rotating at a high speed to come out from under the mower deck, causing serious injury or property damage.

- **Replace the blade bolt after striking a foreign object.**
- **Use only genuine Toro replacement parts.**
- **Do not lubricate the threads of the bolt or spindle before assembly.**

Removing the Mower Deck

⚠ WARNING

Operating this machine without an approved Toro front mount attachment increases the possibility of operator entanglement in drive wheels or forward tip-over. Entanglement or tip-over could cause serious injury or death.

When operating this machine without an approved Toro front mount attachment, observe the following:

- **Keep feet and clothing away from tires.**
- **Limit operation to minimum required to install a different front mount attachment.**
- **Minimize speed and use extreme caution.**
- **Only operate on a flat level surface.**
- **Do not operate up or down a trailer ramp.**
- **Avoid sudden acceleration or deceleration.**

Important: Do not transport this machine without an approved Toro front mount attachment.

1. Shut off engine, wait for all moving parts to stop, and remove key. Engage parking brake.
2. Raise mower deck up and latch with deck locking pins. Refer to Raising the Mower Deck into Service Position (page 22).
3. Remove hairpins and washers at the top of the deck lift assist spring on each side of the machine (Figure 75).

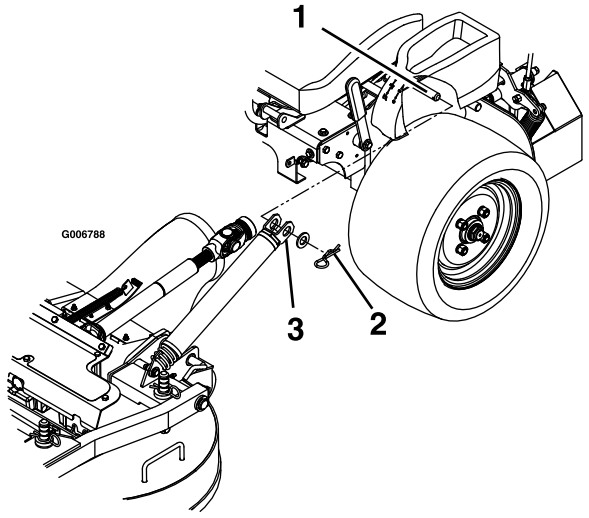

Figure 75

1. Spring anchor pin under console
2. Secure springs with a washer and hairpin
3. Slide the spring onto the spring-anchor pin

4. Remove the spring from the spring anchor. Repeat for other side of the machine.
5. Unlatch the mower deck from the raised position and slowly lower the mower deck to ground; refer to

Lowering the Mower Deck to the Operating Position (page 23).

Note: The mower deck will become heavier when you remove the springs from the anchors. Lower the mower deck carefully.

6. Remove the lynch pins at front of push arms on both sides of the machine (Figure 76).

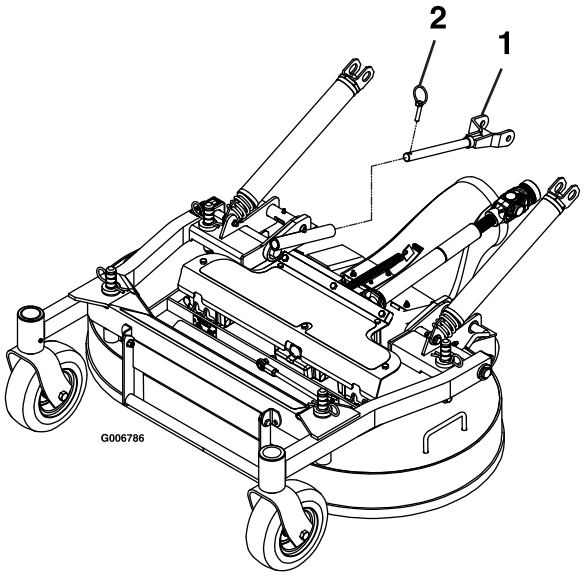

Figure 76

1. Slide the push arm into the deck push-arm tube.
2. Secure the push pin arm with the lynch pin.

7. Loosen the bolts attached to the rubber guard (Figure 77).

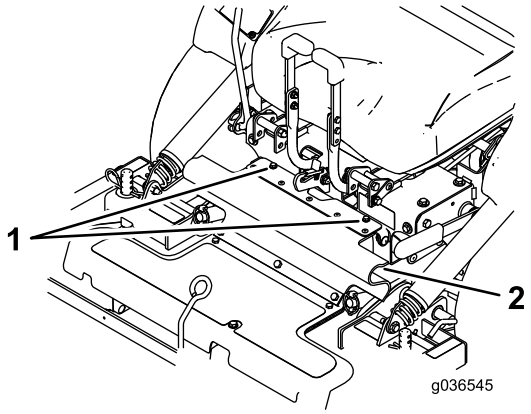

Figure 77

1. Bolts
2. Rubber guard

8. Unlatch the seat and disconnect the drive shaft using the quick coupler at the jackshaft (Figure 78).

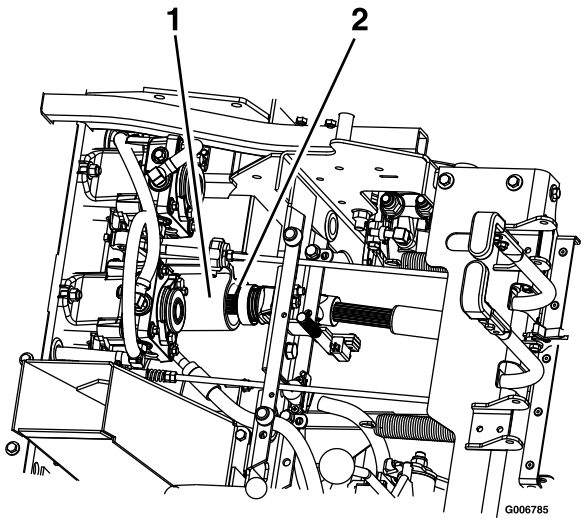

Figure 78

1. Jackshaft
2. Drive shaft

9. Pull the mower deck forward to remove it from the machine.

Installing the Mower Deck

Important: Do not transport the machine without an approved Toro front mount attachment.

1. Shut off the engine, wait for all moving parts to stop and remove the key. Engage the parking brake.
2. Roll the mower deck up to the machine with the discharge tube down, making sure that the deck springs are located above the drive wheel and below the console on each side.
3. Unlatch the seat and tilt the seat forward.
4. Install the l drive shaft onto the jackshaft (Figure 78).
5. Align the mower deck push-arm tubes to machine push-arms and push the mower deck rearward.
6. Secure the push arms with the lynch pins on the left and right sides of the machine (Figure 76).
7. Align the upper portion of the rubber guard and secure it with the attached bolts (Figure 77).
8. Release the mower deck locking pins on each side, raise the mower deck to the service position and secure the deck latch onto the hook. Refer to Raising the Mower Deck into Service Position (page 22).
9. Install the springs onto the spring anchor pins under the left and right consoles and secure it with a washer and hairpin (Figure 75).
10. Un-latch the mower deck from the raised position, slowly lower the mower deck to ground and lock the deck-locking pins on each side. Refer to Lowering the Mower Deck to the Operating Position (page 23).

Adjusting the Locking-Pin Stop on the Mower Deck

1. Slide the mower deck-locking pins in on both sides and rotate to lock the deck in the operating position.
2. Loosen the jam nut and turn the stop screw clockwise until the locking pin is tight and cannot be rotated by hand (Figure 79).

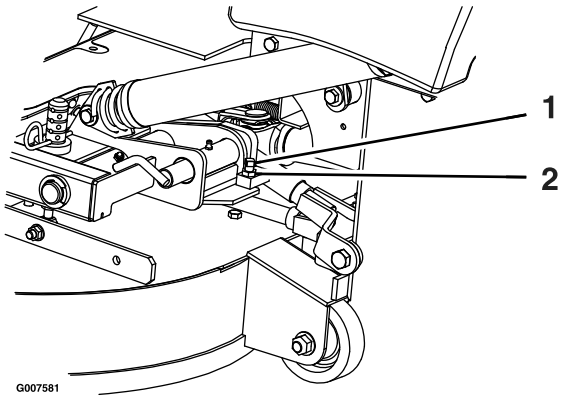

Figure 79

1. Rotate the stop screw clockwise until locking pin is tight, then back off 1/2 turn.
2. Loosen the jam nut

---

3. Loosen the stop screw counter clockwise 1/2 turn and tighten the jam nut.
4. Test the locking pin to make sure that it slides freely. Adjust it if necessary.

Cleaning

Cleaning under the Mower

Service Interval: Before each use or daily

1. Move the speed-control lever to the NEUTRAL position to shut off the machine.
2. Disengage the PTO, engage the parking brake, stop the engine, and wait for all moving parts to stop.
3. Lift the mower deck and secure in the raised position. Refer to Raising the Mower Deck into Service Position (page 22).
4. Clean any grass build-up under the mower deck.
5. Lower the mower deck to the operating position. Refer to Lowering the Mower Deck to the Operating Position (page 23).

Cleaning Debris from the Machine

Service Interval: Before each use or daily

1. Shut off the engine, wait for all moving parts to stop, and remove the key. Engage the parking brake.
2. Clean off any oil, debris, or grass buildup on the machine, especially around the fuel tank, around the engine and exhaust area.

Disposing of Waste

Engine oil, batteries, hydraulic oil, and engine coolant are pollutants to the environment. Dispose of these according to your state and local regulations.

Storage

Cleaning and Storage

1. Disengage the power takeoff (blade-control switch (PTO), set the parking brake, and turn the ignition key to the OFF position. Remove the key.
2. Remove grass clippings, dirt, and grime from the external parts of the entire machine, especially the engine and hydraulic system. Clean dirt and chaff from the outside of the engine cylinder head fins and blower housing.

   Important: You can wash the machine with mild detergent and water. Do not pressure wash the machine. Avoid excessive use of water, especially near the control panel, engine, hydraulic pumps, and motors.
3. Check the brake; refer to Operating the Parking Brake (page 18).
4. Service the air cleaner; refer to Servicing the Air Cleaner (page 33).
5. Grease the machine; refer to Greasing the Machine (page 30).
6. Change the crankcase oil; refer to Changing the Engine Oil (page 36).
7. Check the tire pressure; refer to Checking the Tire Pressure (page 42).
8. Change the hydraulic filters; refer to Replacing the Hydraulic Filter (page 51).
9. Charge the battery; refer to Charging the Battery (page 40).
10. Scrape any heavy buildup of grass and dirt from the underside of the mower, then wash the mower with a garden hose.

    Note: Run the machine with the blade control switch (PTO) engaged and the engine at high idle for 2 to 5 minutes after washing.
11. Check the condition of the blades; refer to Inspecting the Blades (page 53).
12. For storage over 30 days, prepare the machine as follows:

    A. Add a petroleum-based stabilizer/conditioner to fuel in the tank. Follow the mixing instructions from the stabilizer manufacturer. Do not use an alcohol-based stabilizer (ethanol or methanol).

    Note: A fuel stabilizer/conditioner is most effective when mixed with fresh fuel and used at all times.

    B. Run the engine to distribute conditioned fuel through the fuel system (5 minutes).

    C. Shut off the engine, allow it to cool, and drain the fuel tank; refer to Servicing the Fuel Tank (page 39).

    D. Start the engine and run it until it stops.

    E. Dispose of fuel properly. Recycle as per local codes.

    Important: Do not store stabilizer/conditioned fuel over 90 days.
13. Check and tighten all bolts, nuts, and screws. Repair or replace any part that is damaged.
14. Paint all scratched or bare metal surfaces. Paint is available from your Authorized Service Dealer.
15. Store the machine in a clean, dry garage or storage area. Remove the key from the ignition switch and keep it out of reach of children or other unauthorized users. Cover the machine to protect it and keep it clean.

Troubleshooting

Problem	Possible Cause	Corrective Action
The malfunction Indicator light (MIL) comes on.	1. The engine is too hot. 2. There is old gas in the gas tank. 3. The air cleaner is dirty. 4. The battery is not charged. 5. Incorrect fuel filters are being used or the fuel filters are dirty. 6. There is low voltage from the battery. 7. A fuse is blown.	1. Turn the engine off and let it cool. 2. Use new gas. 3. Make sure that the air cleaner and precleaner are clean. Replace if necessary. 4. Charge or replace the battery. 5. Contact an Authorized Service Dealer. 6. Ensure a good 12 volt battery is being used and is fully charged. 7. Check and replace any blown fuses.
The starter does not crank.	1. PTO is engaged. 2. The parking brake is not set. 3. The speed control lever is not in neutral position. 4. The battery does not have a full charge. 5. The electrical connections are corroded, loose or faulty. 6. The fuse is blown. 7. The relay or switch is worn or damaged.	1. Disengage the PTO. 2. Set the parking brake. 3. Ensure the speed control lever is in the neutral position. 4. Charge the battery. 5. Check the electrical connections for good contact. 6. Replace the blown fuse. 7. Contact an Authorized Service Dealer.
The engine does not start, starts hard, or fails to keep running.	1. The fuel tank is empty. 2. The oil level in the crankcase is low. 3. The throttle and choke are not in the correct position. 4. There is dirt in the fuel filter. 5. There is dirt, water, or stale fuel is in the fuel system. 6. The air cleaner is dirty. 7. The electrical connections are corroded, loose, or damaged. 8. The relay or switch is worn or damaged. 9. The spark plug is fouled or improperly gapped. 10. The spark-plug wire is not connected.	1. Fill the fuel tank. 2. Add oil to the crankcase. 3. Be sure the throttle control is midway between the Slow and Fast positions, and the choke is in the closed/on position for a cold engine or the open/off position for a warm engine. 4. Replace the fuel filter. 5. Contact an Authorized Service Dealer. 6. Clean or replace the air-cleaner element. 7. Check the electrical connections for good contact. Clean the connector terminals thoroughly with electrical-contact cleaner, apply dielectric grease, and make the appropriate connections. 8. Contact an Authorized Service Dealer. 9. Adjust or replace the spark plug. 10. Check the spark-plug wire connection.
The engine loses power.	1. The engine load is excessive. 2. The air cleaner is dirty. 3. The oil level in the crankcase is low. 4. The cooling fins and the air passages above the engine are plugged. 5. The vent hole in the fuel cap is plugged. 6. There is dirt in the fuel filter. 7. There is dirt, water, or stale fuel is in the fuel system.	1. Reduce the ground speed. 2. Clean the air-cleaner element. 3. Add oil to the crankcase. 4. Remove the obstruction from the cooling fins and the air passages. 5. Clean or replace the fuel cap. 6. Replace the fuel filter. 7. Contact an Authorized Service Dealer.

Problem	Possible Cause	Corrective Action
The engine overheats.	1. The engine load is excessive. 2. The oil level in the crankcase is low. 3. The cooling fins and air passages for the engine are plugged.	1. Reduce the ground speed. 2. Add oil to the crankcase. 3. Remove the obstructions from the cooling fins and air passages.
The mower pulls left or right (with levers fully forward).	1. The tracking needs adjustment. 2. The tire pressure in drive tires not correct. 3. The reverse indicator and speed control linkage need adjustment.	1. Adjust the tracking. 2. Adjust tire pressure in the drive tires. 3. Adjust the reverse indicator and the speed control linkage.
The machine does not drive.	1. The bypass valve is not closed tight. 2. The drive or pump belt is worn, loose or broken. 3. The drive or pump belt is off a pulley. 4. The idler spring is broken or missing. 5. The hydraulic fluid level is low or too hot.	1. Tighten the bypass valve. 2. Change the belt. 3. Change the belt. 4. Replace the spring. 5. Add hydraulic fluid to reservoir or let it cool down.
The machine vibrates abnormally.	1. The cutting blade(s) is/are bent or unbalanced. 2. The blade mounting bolt is loose. 3. The engine mounting bolts are loose. 4. There is a loose engine pulley, idler pulley, or blade pulley. 5. The engine pulley is damaged. 6. The blade spindle is bent. 7. The belt is damaged.	1. Install new cutting blade(s). 2. Tighten the blade mounting bolt. 3. Tighten the engine mounting bolts. 4. Tighten the appropriate pulley. 5. Contact an Authorized Service Dealer. 6. Contact an Authorized Service Dealer. 7. Install new belt.
The machine produces an uneven cutting height.	1. The blade(s) is/are not sharp. 2. The cutting blade(s) is/are bent. 3. The mower deck is not level. 4. The underside of mower is dirty. 5. The tire pressure in drive tires not correct. 6. The spacers are in the wrong location. 7. The tips of adjacent blades are at an uneven cutting height. Blades tips should be even within 5 mm (3/16 inch) which is approximately one blade thickness.	1. Sharpen the blade(s). 2. Install new cutting blade(s). 3. Level the mower deck from side-to-side and front-to-rear. 4. Clean the underside of the mower. 5. Adjust the tire pressure in the drive tires. 6. Position the spacers under hairpins. 7. Replace blades, spindles and (or) check for damage to mower deck.
The blades do not rotate.	1. The PTO belt is worn, loose, or broken. 2. The PTO shaft is not connected. 3. The PTO belt is off pulley.	1. Check the belt tension or replace belt 2. Connect the PTO shaft. 3. Check the belt for damage. Install the belt and check adjusting shafts and belt guides for correct position.

Schematics

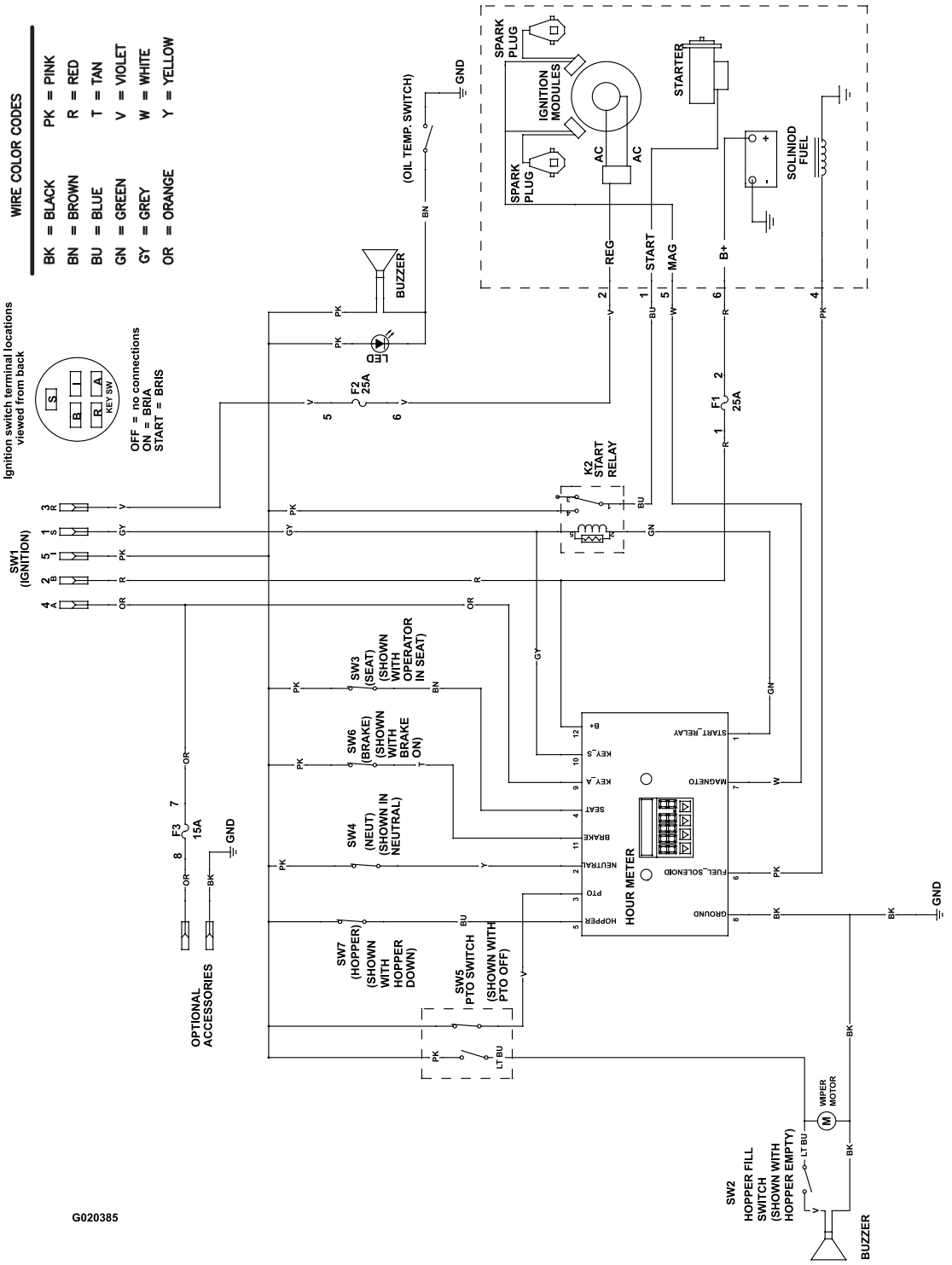

Wire Diagram (Rev. A)

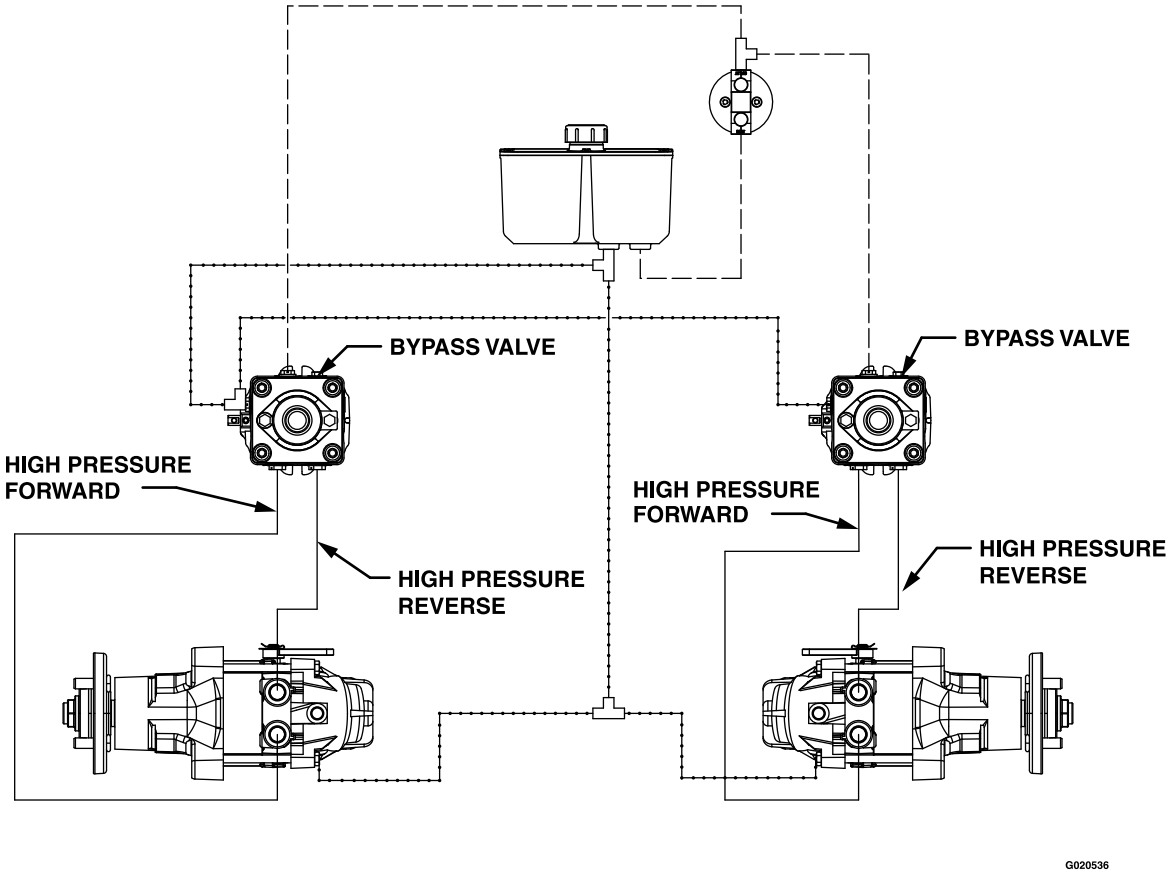

HIGH PRESSURE

CHARGE PUMP

CASE DRAIN

Hydraulic Diagram (Rev. A)

International Distributor List

Distributor:	Country:	Phone Number:	Distributor:	Country:	Phone Number:
Agrolanc Kft	Hungary	36 27 539 640	Maquiver S.A.	Colombia	57 1 236 4079
Asian American Industrial (AAI)	Hong Kong	852 2497 7804	Maruyama Mfg. Co. Inc.	Japan	81 3 3252 2285
B-Ray Corporation	Korea	82 32 551 2076	Mountfield a.s.	Czech Republic	420 255 704 220
Brisa Goods LLC	Mexico	1 210 495 2417	Mountfield a.s.	Slovakia	420 255 704 220
Casco Sales Company	Puerto Rico	787 788 8383	Munditol S.A.	Argentina	54 11 4 821 9999
Ceres S.A.	Costa Rica	506 239 1138	Norma Garden	Russia	7 495 411 61 20
CSSC Turf Equipment (pvt) Ltd.	Sri Lanka	94 11 2746100	Oslinger Turf Equipment SA	Ecuador	593 4 239 6970
Cyril Johnston & Co.	Northern Ireland	44 2890 813 121	Oy Hako Ground and Garden Ab	Finland	358 987 00733
Cyril Johnston & Co.	Republic of Ireland	44 2890 813 121	Parkland Products Ltd.	New Zealand	64 3 34 93760
Fat Dragon	China	886 10 80841322	Perfetto	Poland	48 61 8 208 416
Femco S.A.	Guatemala	502 442 3277	Pratoverde SRL.	Italy	39 049 9128 128
FIVEMANS New-Tech Co., Ltd	China	86-10-6381 6136	Prochaska & Cie	Austria	43 1 278 5100
ForGarder OU	Estonia	372 384 6060	RT Cohen 2004 Ltd.	Israel	972 986 17979
G.Y.K. Company Ltd.	Japan	81 726 325 861	Riversa	Spain	34 9 52 83 7500
Geomechaniki of Athens	Greece	30 10 935 0054	Lely Turfcare	Denmark	45 66 109 200
Golf international Turizm	Turkey	90 216 336 5993	Lely (U.K.) Limited	United Kingdom	44 1480 226 800
Hako Ground and Garden	Sweden	46 35 10 0000	Solvert S.A.S.	France	33 1 30 81 77 00
Hako Ground and Garden	Norway	47 22 90 7760	Spypros Stavrinides Limited	Cyprus	357 22 434131
Hayter Limited (U.K.)	United Kingdom	44 1279 723 444	Surge Systems India Limited	India	91 1 292299901
Hydroturf Int. Co Dubai	United Arab Emirates	97 14 347 9479	T-Markt Logistics Ltd.	Hungary	36 26 525 500
Hydroturf Egypt LLC	Egypt	202 519 4308	Toro Australia	Australia	61 3 9580 7355
Irrimac	Portugal	351 21 238 8260	Toro Europe NV	Belgium	32 14 562 960
Irrigation Products Int'l Pvt Ltd.	India	0091 44 2449 4387	Valtech	Morocco	212 5 3766 3636
Jean Heybroek b.v.	Netherlands	31 30 639 4611	Victus Emak	Poland	48 61 823 8369

European Privacy Notice

The Information Toro Collects
Toro Warranty Company (Toro) respects your privacy. In order to process your warranty claim and contact you in the event of a product recall, we ask you to share certain personal information with us, either directly or through your local Toro company or dealer.

The Toro warranty system is hosted on servers located within the United States where privacy law may not provide the same protection as applies in your country.

BY SHARING YOUR PERSONAL INFORMATION WITH US, YOU ARE CONSENTING TO THE PROCESSING OF YOUR PERSONAL INFORMATION AS DESCRIBED IN THIS PRIVACY NOTICE.

The Way Toro Uses Information
Toro may use your personal information to process warranty claims, to contact you in the event of a product recall and for any other purpose which we tell you about. Toro may share your information with Toro's affiliates, dealers or other business partners in connection with any of these activities. We will not sell your personal information to any other company. We reserve the right to disclose personal information in order to comply with applicable laws and with requests by the appropriate authorities, to operate our systems properly or for our own protection or that of other users.

Retention of your Personal Information
We will keep your personal information as long as we need it for the purposes for which it was originally collected or for other legitimate purposes (such as regulatory compliance), or as required by applicable law.

Toro's Commitment to Security of Your Personal Information
We take reasonable precautions in order to protect the security of your personal information. We also take steps to maintain the accuracy and current status of personal information.

Access and Correction of your Personal Information
If you would like to review or correct your personal information, please contact us by email at legal@toro.com.

Australian Consumer Law

Australian customers will find details relating to the Australian Consumer Law either inside the box or at your local Toro Dealer.

The Toro Warranty

Landscape Contractor Equipment (LCE)

Conditions and Products Covered

The Toro Company and its affiliate, Toro Warranty Company, pursuant to an agreement between them, jointly promise to the original purchaser to repair the Toro Products listed below if defective in materials or workmanship.

The following time periods apply from the date of purchase:

Products	Warranty Period
Walk Behind Mowers	
53 cm Mowers – Residential use[1]	2 years
53 cm Mowers – Commercial use	1 year
76 cm Mowers – Residential use[1]	2 years
76 cm Mowers – Commercial use	1 year
Mid-Size Walk-Behind Mowers	2 years
• Engine	2 years[2]
Grand Stand® Mowers	5 years or 1,200 hours[3]
• Engine	2 years
Z Master® 2000 Series Mowers	4 years or 500 hours [3]
• Engine	2 years[2]
Z Master® 3000 Series Mowers	5 years or 1,200 hours[3]
• Engine	2 years[2]
Z Master® 5000 and 6000 Series Mowers	5 years or 1,200 hours[3]
• Engine	2 years[2]
Z Master® 7000 Series Mowers	5 years or 1,200 hours[3]
• Engine	2 years[2]
All Mowers	
• Battery	2 years
• Attachments	2 years

[1]Residential use means use of the product on the same lot as your home. Use at more than one location is considered commercial use and the commercial warranty would apply.

[2]Some engines used on Toro LCE Products are warranted by the engine manufacturer.

[3]Whichever occurs first.

This warranty includes the cost of parts and labor, but you must pay transportation costs.

Instructions for Obtaining Warranty Service

If you think that your Toro Product contains a defect in materials or workmanship, follow this procedure:

1. Contact your seller to arrange service of the product. If for any reason it is impossible for you to contact your seller, you may contact any Toro Authorized Distributor to arrange service.
2. Bring the product and your proof of purchase (sales receipt) to the Service Dealer.
3. If for any reason you are dissatisfied with the Service Dealer's analysis or with the assistance provided, contact us at:

   Toro Warranty Company
   8111 Lyndale Avenue South
   Bloomington, MN 55420-1196
   001-952-948-4707

   See attached Distributor List.

Owner Responsibilities

You must maintain your Toro Product by following the maintenance procedures described in the *Operator's Manual*. Such routine maintenance, whether performed by a dealer or by you, is at your expense.

Items and Conditions Not Covered

There is no other express warranty except for special emission system coverage and engine warranty coverage on some products. This express warranty does not cover the following:

- Cost of regular maintenance service or parts, such as filters, fuel, lubricants, oil changes, spark plugs, air filters blade sharpening or worn blades, cable/linkage adjustments, or brake and clutch adjustments
- Components failing due to normal wear
- Any product or part which has been altered or misused or neglected or requires replacement or repair due to accidents or lack of proper maintenance
- Pickup and delivery charges
- Repairs or attempted repairs by anyone other than an Authorized Toro Service Dealer
- Repairs necessary due to failure to follow recommended fuel procedure (consult *Operator's Manual* for more details)
  - Removing contaminants from the fuel system is not covered
  - Use of old fuel (more than one month old) or fuel which contains more than 10% ethanol or more that 15% MTBE
  - Failure to drain the fuel system prior to any period of non-use over one month

General Conditions

The purchaser is covered by the national laws of each country. The rights to which the purchaser is entitled with the support of these laws are not restricted by this warranty.