Form No. 3404-702 Rev B

Front Spring Kit

2016 and After GTX/MDX/MDX-D Series Utility Vehicle

Model No. 133-0630

Model No. 133-7145

Installation Instructions

⚠ WARNING

CALIFORNIA
Proposition 65 Warning

This product contains a chemical or chemicals known to the State of California to cause cancer, birth defects, or reproductive harm.

⚠ WARNING

The compressed spring in the spring and shock assembly represents a stored-energy hazard. If the spring is not properly retained during compression or removal, it can injure you and/or bystanders.

- **Always use the approved Toro spring-compression tool to compress the spring in a secure position when removing the retention collar.**
- **Always use care when removing pressure from the compressed spring.**

Important: **The Spring Kit should be installed only by qualified Toro Service Technicians using approved tools. Improper removal, disassembly, or installation of the spring assembly poses a danger to you and bystanders. Please contact your Authorized Toro Dealer for the appropriate tools and proper installation of this kit.**

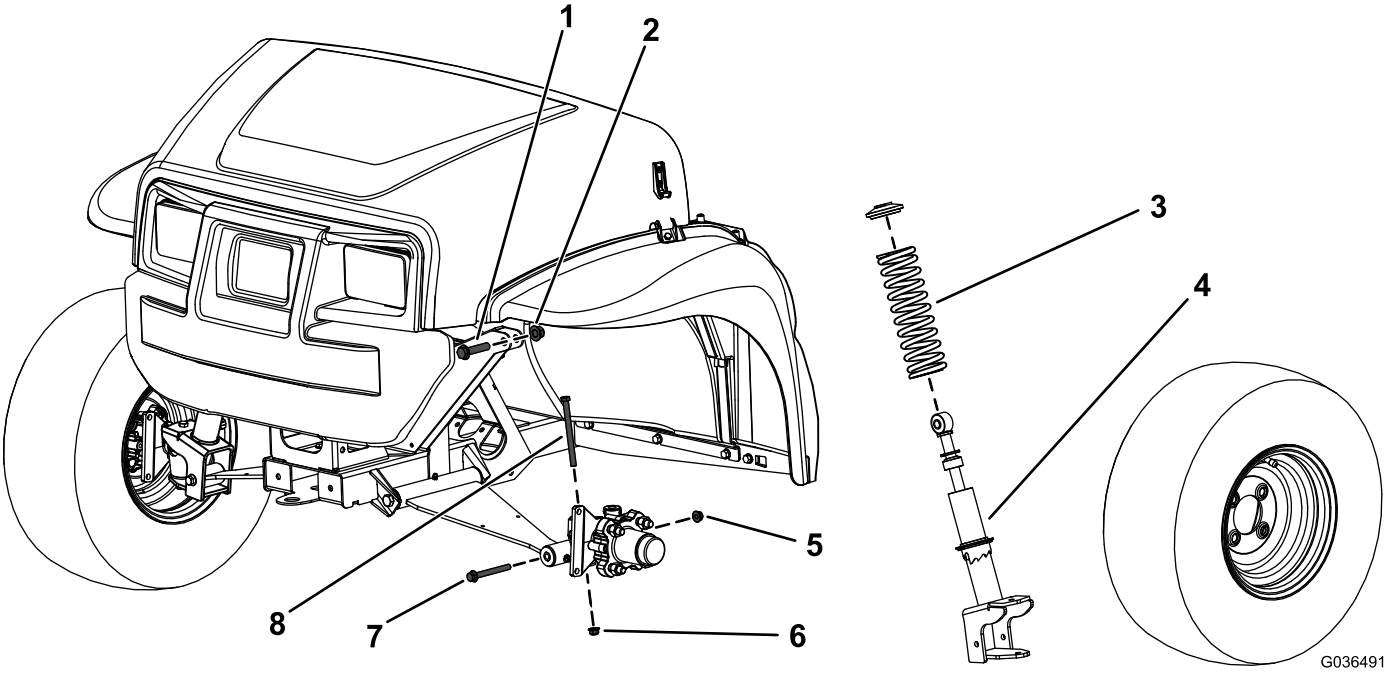

Figure 1

1. Hex-head bolt (1/2 x 2-1/4 inches)
2. Locknut (1/2 inch)
3. Spring
4. Strut assembly
5. Flange nut (3/8 inch)—from the control arm
6. Flange nut (3/8 inch)—from the spindle
7. Hex-head bolt (3/8 x 3-1/2 inches)—from the control arm
8. Hex-head bolt (3/8 x 4-3/4 inches)—from the spindle

© 2016—The Toro® Company
8111 Lyndale Avenue South
Bloomington, MN 55420

Register at www.Toro.com.

CE

Original Instructions (EN)
Printed in the USA
All Rights Reserved

3404-702 B

Loose Parts

Use the chart below to verify that all parts have been shipped.

Procedure	Description	Qty.	Use
1	No parts required	–	Prepare the machine.
2	No parts required	–	Remove the strut assembly.
3	Spring	2	Install the springs.
4	No parts required	–	Install the strut assembly.

1

Preparing the Machine

No Parts Required

Procedure

1. Park the machine on a level surface, set the parking brake, shut off the engine, and remove the key.
2. Disconnect the negative battery cable; refer to your *Operator's Manual*.
3. Raise the front of the machine.

2

Removing the Strut Assembly

No Parts Required

Procedure

1. Remove the front wheel.
2. Remove the hex-head bolt (3/8 x 4-3/4 inches) and flange nut (3/8 inch) from the spindle (Figure 1).
3. Remove the hex-head bolt (3/8 x 3-1/2 inches) and flange nut (3/8 inch) from the control arm (Figure 1).
4. Remove the hex-head bolt (1/2 x 2-1/4 inches) and locknut (1/2 inch) securing the strut assembly to the upper frame (Figure 1).
5. Remove the strut assembly (Figure 1).

Note: Repeat this procedure for the other side of the machine.

3

Installing the Springs

Parts needed for this procedure:

2	Spring

Procedure

Use an approved Toro spring-compression tool to remove and install springs of the strut assembly. Contact your Authorized Toro Dealer.

1. Place the strut assembly into the compression tool and use the tool to compress the spring.
2. While the spring is compressed, remove the collar.
3. Remove the spring from the strut assembly (Figure 1).
4. Install the new spring over the existing strut assembly (Figure 1).
5. Using the Toro spring-compression tool, compress the spring.
6. While the spring is compressed, install the collar.
7. Carefully release pressure on the spring, allowing it to seat on the collar.
8. Remove the strut assembly from the compression tool.

Note: Repeat this procedure for the other side of the machine.

4

Installing the Strut Assembly

No Parts Required

Procedure

1. Install strut assembly to the machine.
2. Secure the upper portion of the strut assembly to the frame using the upper, hex-head bolt (1/2 x 2-1/4 inches) and locknut (1/2 inch) as shown in Figure 1.
3. Torque the hex-head bolt (1/2 x 2-1/4 inches) to 91 to 113 N·m (67 to 83 ft-lb).
4. Install the hex-head bolt (3/8 x 4-3/4 inches) and flange nut (3/8 inch) to the spindle (Figure 1).
5. Torque the hex-head bolt (3/8 x 4-3/4 inches) to 37 to 45 N·m (27 to 33 ft-lb).
6. Secure the lower portion of the strut assembly to the control arm using the hex-head bolt (3/8 x 3-1/2 inches) and flange nut (3/8 inch) as shown in Figure 1.
7. Torque the hex-head bolt (3/8 x 3-1/2 inches) to 37 to 45 N·m (27 to 33 ft-lb).
8. Install the front wheel.

Note: Repeat this procedure for the other side of the machine.



Count on it.