Form No. 3406-347 Rev A

Multi-Passenger Kit

Workman® GTX Series Utility Vehicles

Model No. 07133

Installation Instructions

⚠ WARNING

CALIFORNIA
Proposition 65 Warning

This product contains a chemical or chemicals known to the State of California to cause cancer, birth defects, or reproductive harm.

© 2016—The Toro® Company
8111 Lyndale Avenue South
Bloomington, MN 55420

Register at www.Toro.com.

CE

Original Instructions (EN)
Printed in the USA
All Rights Reserved

3406-347 A

Installation

Loose Parts

Use the chart below to verify that all parts have been shipped.

Description	Qty.	Use
Floor support	2	
Floor plate	1	
Connection plate	2	
Channel extension	1	
Channel-extension cover	1	
Left Extension rail	1	
Right extension rail	1	
Front seat support	2	
Rear seat support	2	
Front seat brace	1	
Rear seat brace	1	
Spacer (7/16 x 1-1/2 inches)	6	
Panel bracket	4	
Left side panel	1	
Right side panel	1	
Flat washer	4	
Bolt (1/4 x 2 inches)	4	Install the kit.
Flange nut (1/4 inch)	8	
Flange bolt (3/8 x 3/4 inch)	8	
Flange bolt (5/16 x 3/4 inch)	24	
Left hip restraint	1	
Right hip restraint	1	
Parking-brake cable	1	
Throttle cable (gasoline model only)	1	
Choke cable (gasoline model only)	1	
Shift cable (gasoline model only)	1	
Self-tapping screw (3/32 x 7/8 inches)	11	
Flange bolt (5/16 x 3/4 inch)	6	
Flange nut (5/16 inch)	6	
Screw and washer assembly	4	
Seat-base panel	2	
Screw (#10 x 1/2 inch)	10	
TOR-6040 support kit (required)	1	

Preparing the Machine

Note: Determine the left and right sides of the machine from the normal operating position.

1. Move the machine to an area in your work space with enough room to install the kit.
2. Shut off the engine and remove the key from the ignition switch.
3. Ensure that the machine is secure from movement before you begin the installation.
4. Remove the upper seat assembly.
   A. For a machine with bucket seats; Tilt the seat back forward and lift the seat assembly out.
   B. For a machine with bench seats; Lift the back of the bench seat up and out of the seat platform and remove the backrest.

Installing the Kit on a Machine with a Gasoline Engine

Removing the Left Cover

Note: Retain all the hardware that you remove in this procedure.

1. Remove the flange bolt securing the fuel tank to the tank tray (Figure 1).

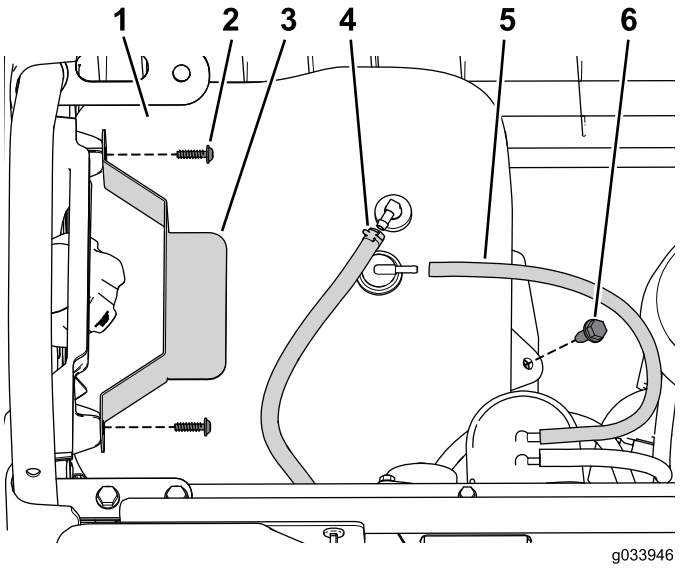

Figure 1

1. Fuel tank
2. Screw
3. Hold-down
4. Fuel line
5. Vent hose
6. Flange bolt

2. Remove the screws that secure the hold down (Figure 1).
3. Disconnect the vent tube and fuel line from the tank (Figure 1).

Note: Prepare to capture and clean up any fuel that spills when you disconnect the fuel line from the tank.

4. Remove the fuel tank from the tray.
5. Remove the 2 flange bolts that secure the tank tray to the frame (Figure 2).

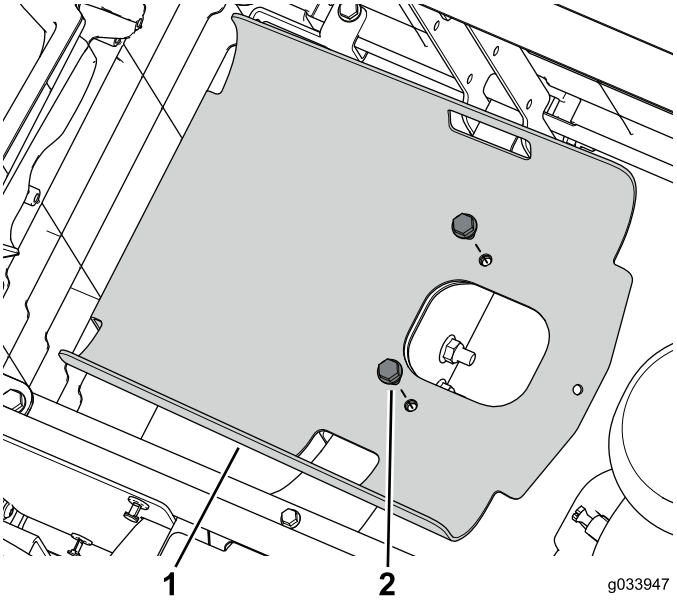

Figure 2

1. Tank tray
2. Flange bolt

6. Remove the 4 screws securing the left panel to the lower-seat assembly (Figure 3).

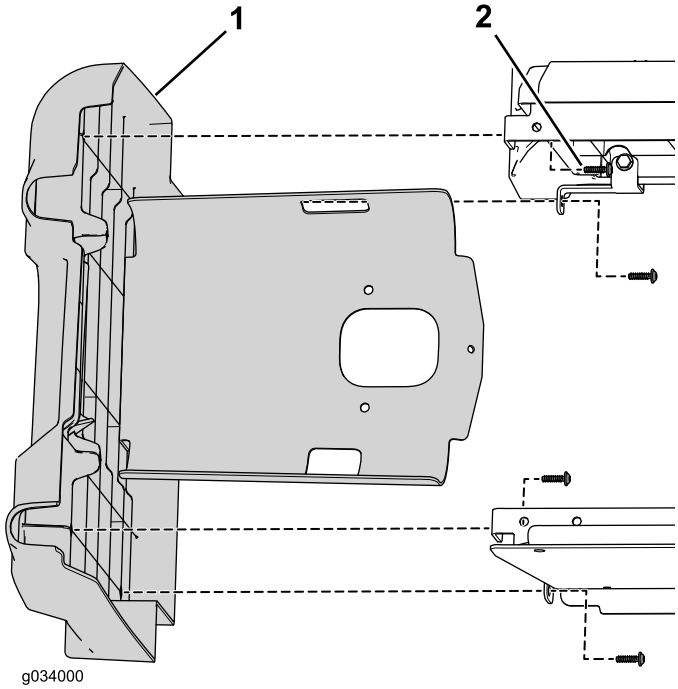

Figure 3

1. Left panel
2. Screw

Removing the Right Cover

Note: Retain all the hardware that you remove in this procedure.

1. Remove the negative (–) cable from the battery and then the positive (+) cable.

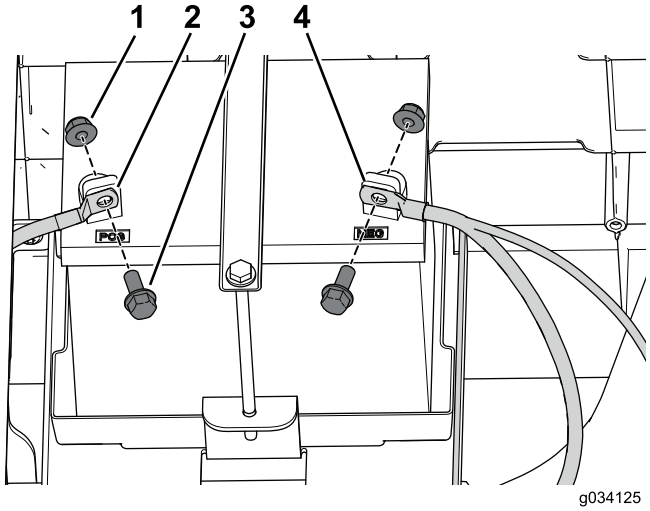

Figure 4

1. Nut
2. Positive cable (+)
3. Bolt
4. Negative cable (–)

2. Remove the 2 flange bolts that secure the battery tray to the frame (Figure 5).

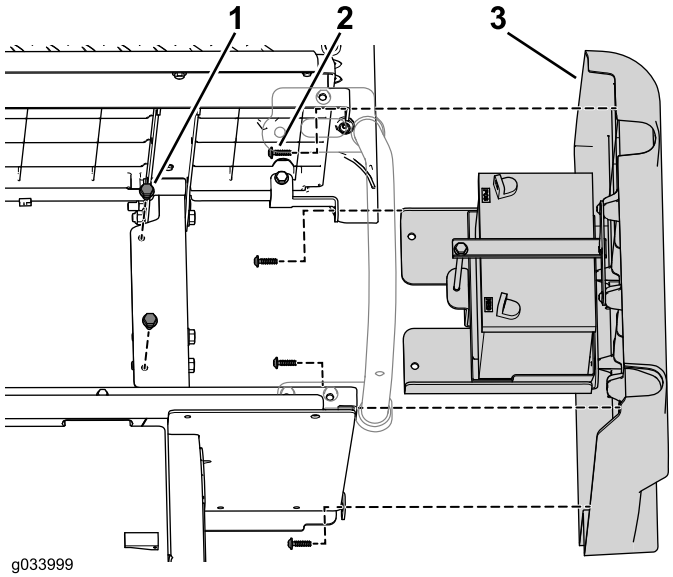

Figure 5

1. Flange bolt
2. Self-tapping screw
3. Right panel assembly

3. Remove the 4 screws securing the right panel to the lower-seat assembly (Figure 5).

Removing the Left Hip Restraint

Remove and retain the 3 flange bolts and flange nuts that secure the hip restraint to the machine (Figure 6).

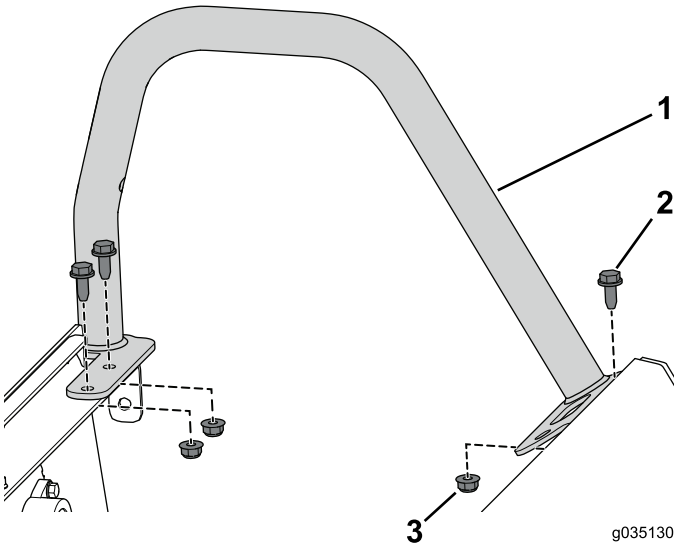

Figure 6

1. Hip restraint (short)
2. Flange bolt (5/16 x 3/4 inch)
3. Flange nut (5/16 inch)

Disconnecting the Right Hip Restraint

Remove and retain the front flange bolt and flange nut that secures the front of the hip restraint to the machine (Figure 7).

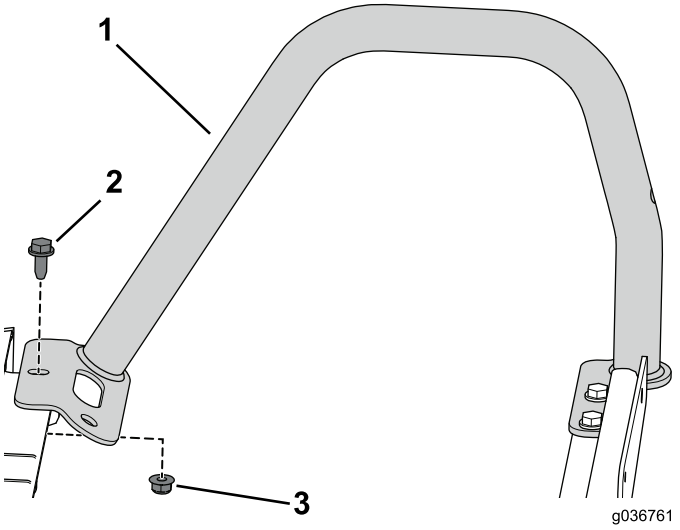

Figure 7

1. Hip restraint (tall)
2. Flange bolt (5/16 x 3/4 inch)
3. Flange nut (5/16 inch)

Disconnecting the Parking-Brake Cables

1. Loosen the jam nut and then turn the adjustment screw 2 turns counter clockwise on both rear-brake calipers (Figure 8).

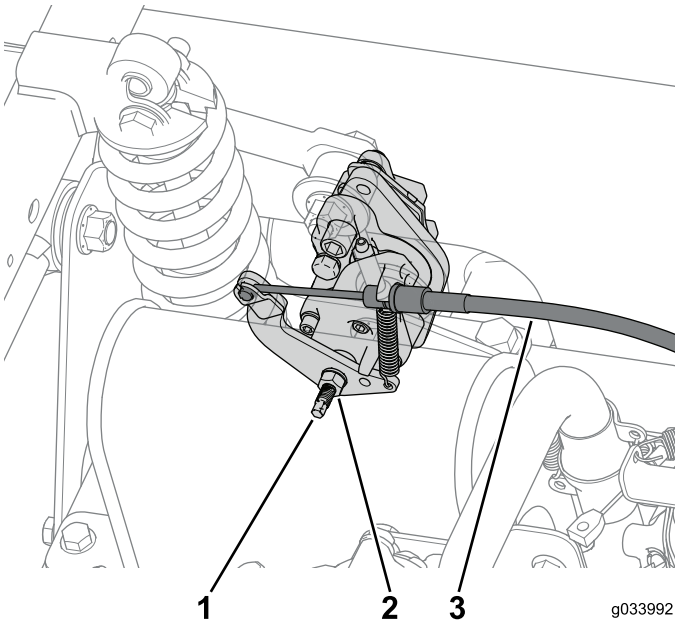

Figure 8

1. Adjustment screw
2. Jam nut
3. Brake cable

2. Disconnect the parking-brake cable from both rear-brake calipers (Figure 8).

   Note: Cut any cable ties that are securing the brake cable to the machine.

3. Disconnect the throttle cable from the throttle lever and remove it from the throttle bracket (Figure 9).

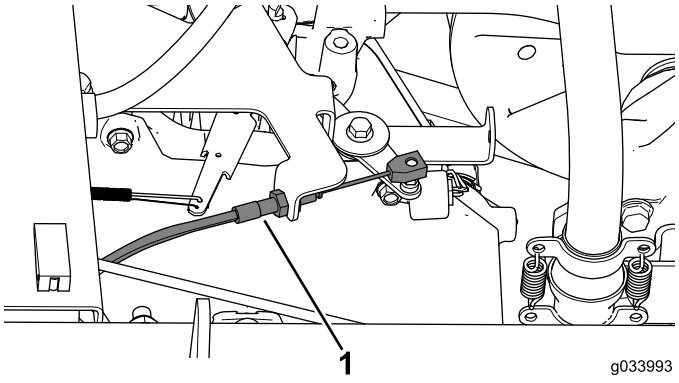

Figure 9

1. Throttle cable

4. Disconnect the shift cable from the shift-cable bracket and remove it from the shift-cable bracket (Figure 10).

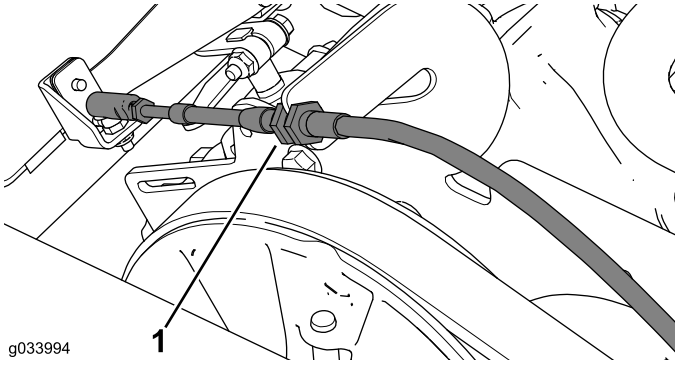

Figure 10

1. Shift cable

   Note: Mark each end of the cable to identify the front and rear cable ends. Use this as a reference when you install the new shift cable.

5. Disconnect the choke cable from the engine (Figure 11).

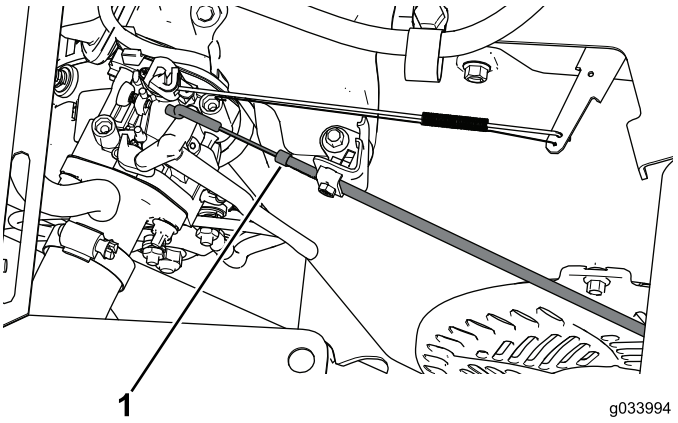

Figure 11

1. Choke cable

6. Remove and retain the 10 screw (1/4 x 1-1/4 inches) to partially remove the dashboard and disconnect the parking brake, throttle, and shift cables (Figure 12).

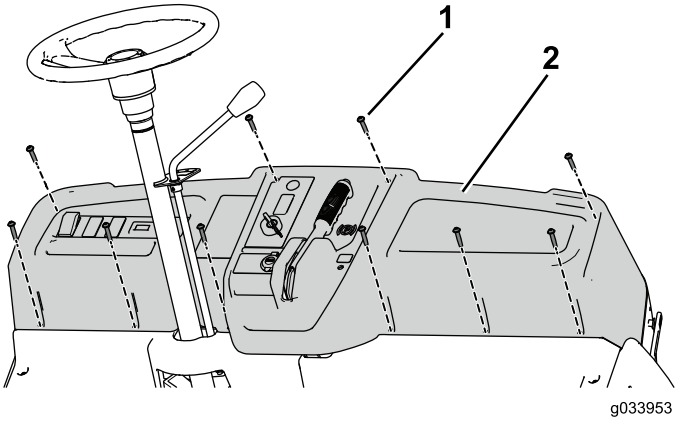

Figure 12

1. Screw (1/4 x 1-1/4 inches)
2. Dashboard

Note: Remove the cable ties that prevent you from partially removing the dashboard. You will need to replace the cable ties in a later step.

7. Remove the retaining nut on the choke cable and pull it through the dashboard.

Installing the TOR-6040 Support Kit

Use the TOR-6040 support kit when you install the multi-passenger kit.

1. Remove flange bolt on the throttle bracket (Figure 13).
2. Use the 2 flange nuts, washer, and thread rod to install the bridge support to the engine (Figure 13).

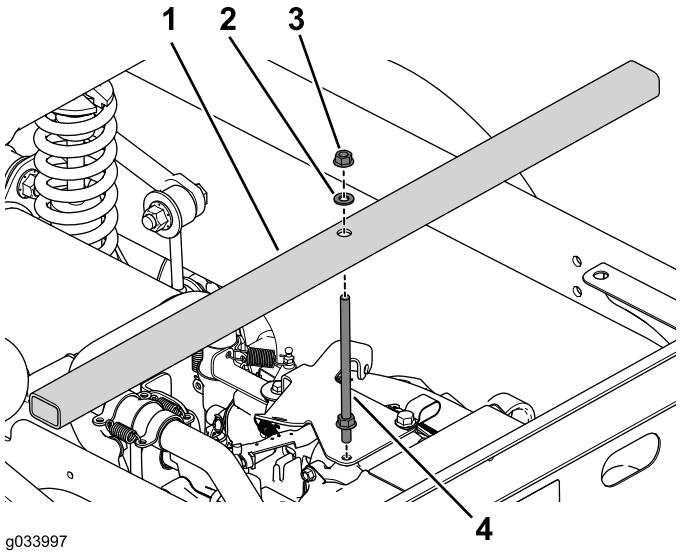

Figure 13

1. Bridge support
2. Washer
3. Flange nut
4. Thread rod

Important: Ensure that you install the bridge support to secure the engine and prevent it from dropping when you separate the machine.

3. Use the 4 flange bolts to install the support legs to both sides of the machine (Figure 14).

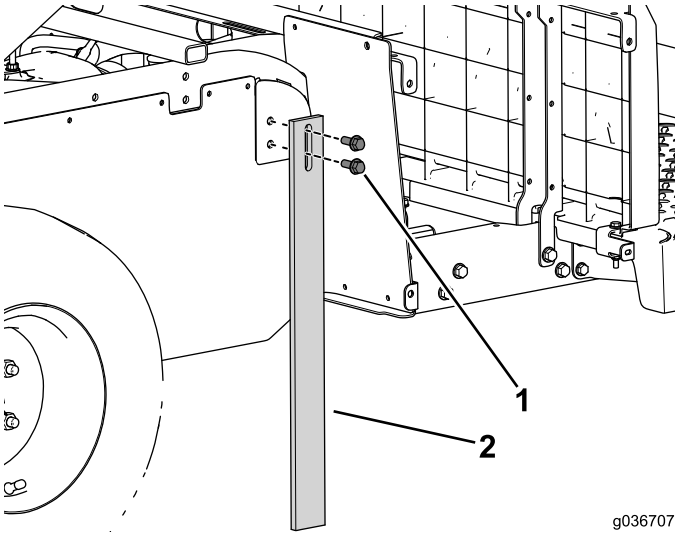

Figure 14

1. Flange bolt (3/8 x 1 inch)
2. Support leg

Separating the Machine

Note: Retain all the hardware that you remove in this procedure.

1. Use a floor jack under the center channel to support the front of the machine (Figure 15).

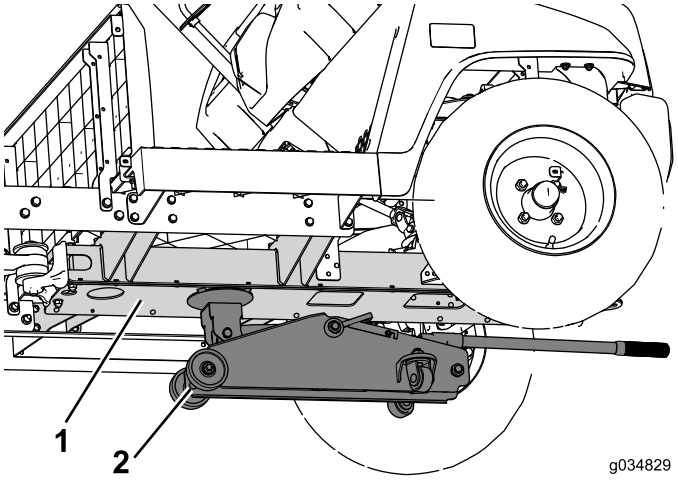

Figure 15

1. Center channel
2. Floor jack

2. Remove the flange bolts (3/8 x 2-1/2 inches) and nuts that secure the side rail to the machine (Figure 16). Do this on both sides of the machine.

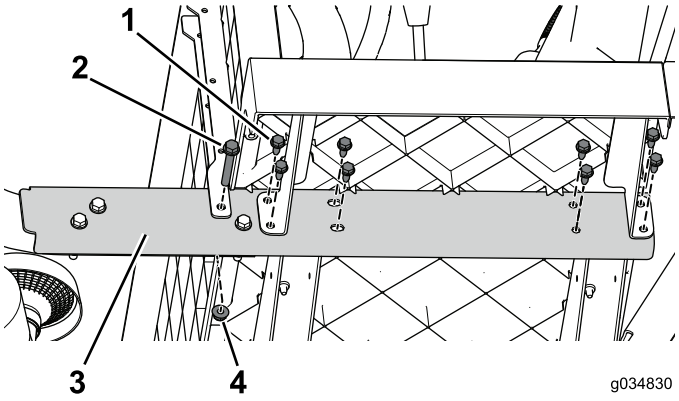

Figure 16

1. Flange bolt (5/16 x 3/4 inch)
2. Flange bolt (3/8 x 2-1/2 inches)
3. Side rail
4. Flange nut (3/8 inch)

3. Working from front to back, remove the flange bolts (5/16 x 3/4 inch) that secure the side rail to the machine (Figure 16). Do this on both sides of the machine.
4. Remove the 3 flange bolts (3/8 x 2-1/2 inches) and nuts (Figure 17). Do this on both sides of the machine.

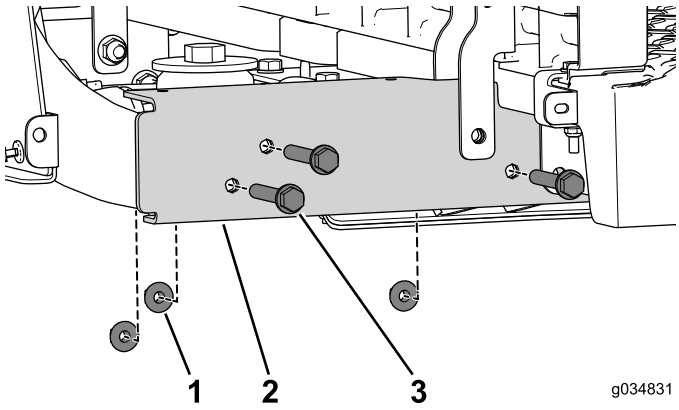

Figure 17

1. Flange nut (3/8 inch)
2. Side rail
3. Flange bolt (3/8 x 2-1/2 inches)

5. Remove the self-tapping screw that secures the tee fitting to the center channel (Figure 18).

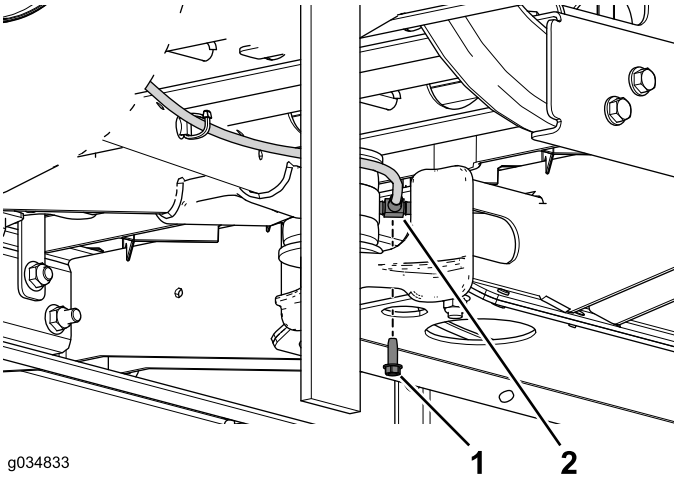

Figure 18

1. Self-tapping screw (1/4 x 3/4 inch)
2. Tee fitting

6. Remove the bolts and flange nuts that secure the swing arm mount to the center channel (Figure 19).

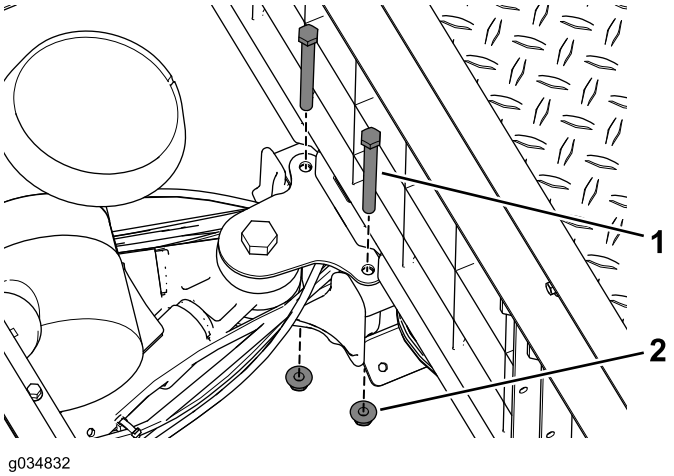

Figure 19

1. Bolt (3/8 x 3-3/4 inches)
2. Flange nut

7. Remove the cable ties used to secure the electrical and mechanical lines inside the center channel as you separate the machine.

8. Have an assistant help you move the front section forward and away from the rear section (Figure 20).

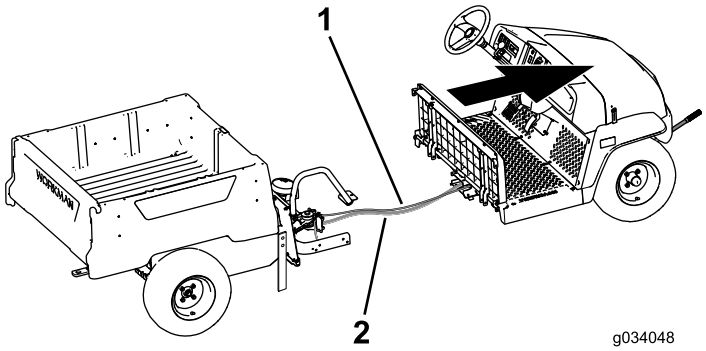

Figure 20

1. Brake line
2. Wire harness

Installing the Center Channel

Note: Use the hardware that you retained from a previous step to complete the following procedure.

1. Use the 4 flange bolts (3/8 x 3/4 inch) to loosely install the top and bottom connection plates to the center channel on the front section (Figure 21).

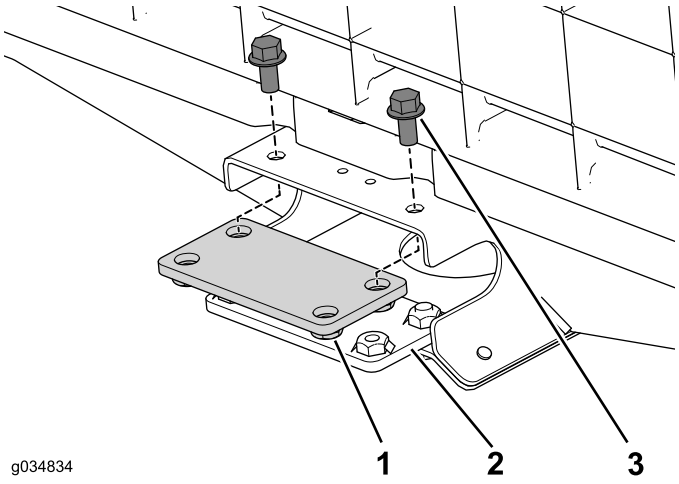

Figure 21

1. Connection plate (top)
2. Connection plate (bottom)
3. Flange bolt (3/8 x 3/4 inch)

2. Loosely install the extension rail to the right side of the machine (Figure 22).

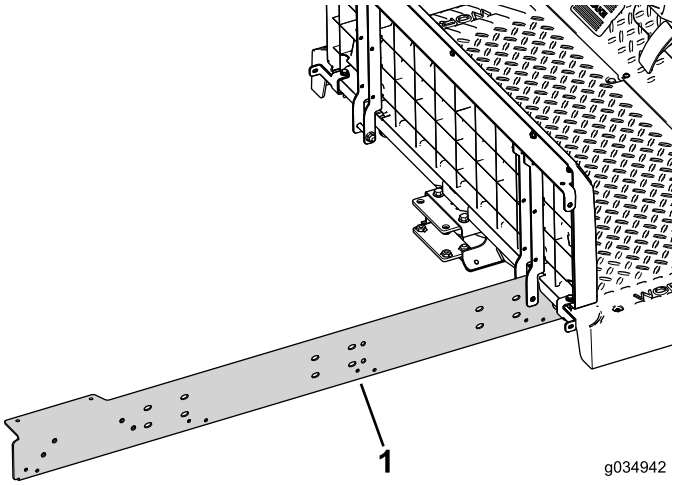

Figure 22

1. Extension rail

3. Use the 2 bolts (5/16 x 3/4 inch) to loosely install the extension rail to the center channel to the front section of the machine (Figure 23).

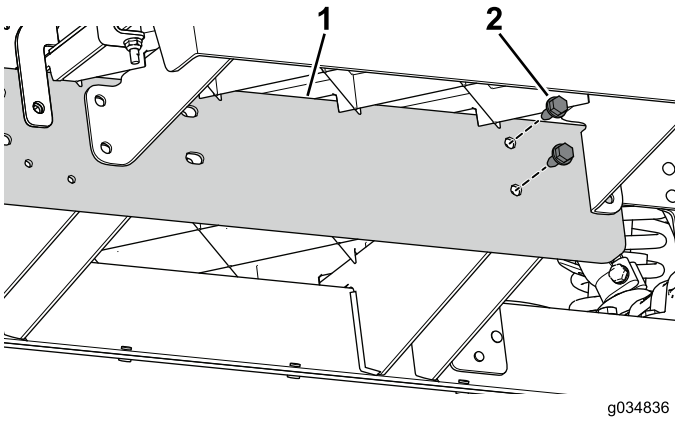

Figure 23

1. Extension rail
2. Bolts (5/16 x 3/4 inch)

4. Insert the 2 bolts (3/8 x 3/4 inches) through the center channel and rear mount (Figure 24).

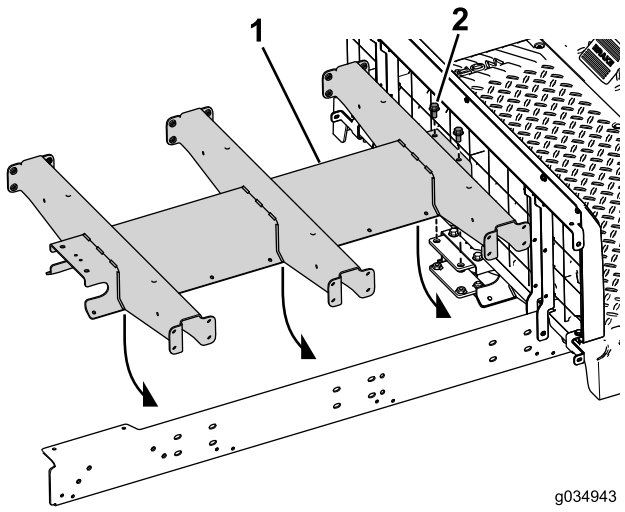

Figure 24

1. Channel extension
2. Bolt (3/8 x 3/4 inch)

5. Loosely install the extension rail to the left side of the machine (Figure 25).

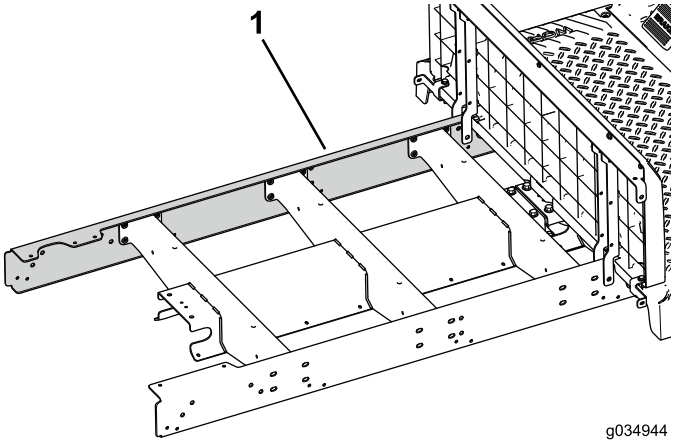

Figure 25

1. Extension rail

6. Use the 2 bolts (5/16 x 3/4 inch) to loosely install the extension rail to the center channel to the front section of the machine (Figure 26).

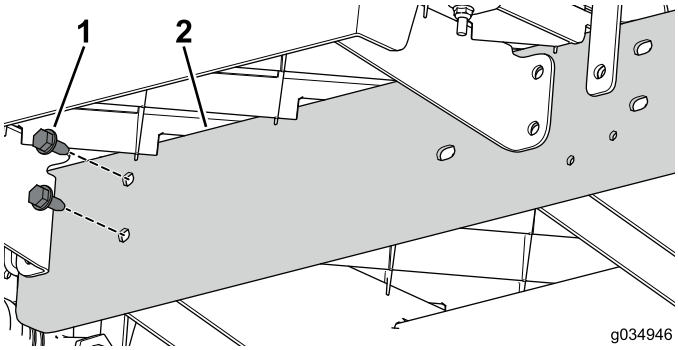

Figure 26

1. Bolts (5/16 x 3/4 inch)
2. Extension rail

7. Have an assistant help you bring the front and rear sections of the machine together (Figure 27).

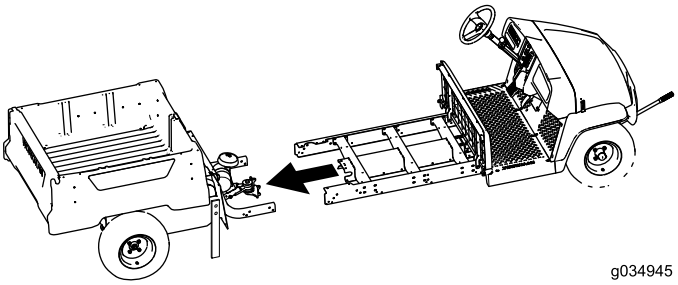

Figure 27

8. Use the 3 bolts (3/8 x 2-1/2 inches) and flange nuts to loosely install the extension rail to the rear frame (Figure 28). Do this on both sides of the machine.

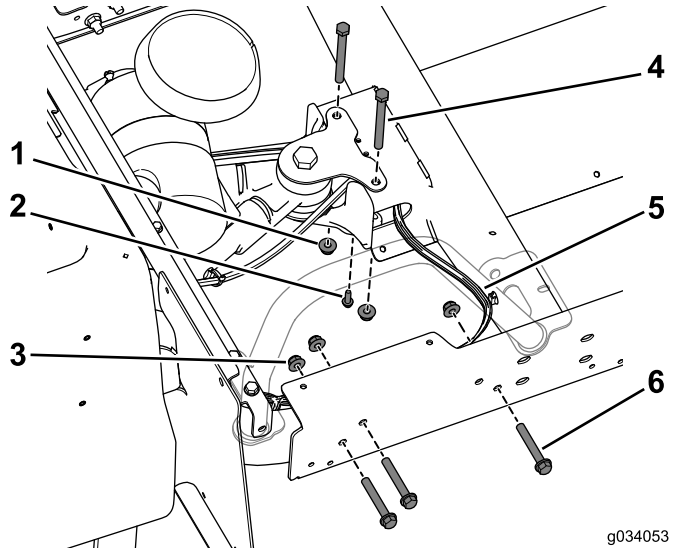

Figure 28

1. Flange nut (3/8 inch)
2. Self-tapping screw (1/4 x 3/4 inch)
3. Flange nut (3/8 inch)
4. Bolts (3/8 x 3-3/4 inches)
5. Wire harness
6. Bolts (3/8 x 2-1/2 inches)

Note: Ensure that the wire harness exits the center channel on the right side (Figure 28).

9. Use the self-tapping screw (1/4 x 3/4 inch) to brake line tee to the center channel (Figure 28).
10. Use the 2 bolts (3/8 x 3-3/4 inches) and flange nuts to loosely install the center channel to the rear mount (Figure 28).

Installing the Side Supports

Note: Use the hardware that you retained from a previous step to complete the following procedure.

1. Use the 4 bolts (5/16 x 3/4 inch) to loosely install the platform support to the center channel (Figure 30).

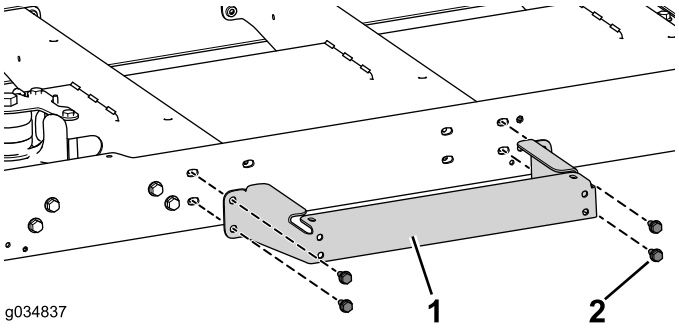

Figure 29

1. Platform support
2. Bolt (5/16 x 3/4 inch)

2. Perform the previous step to the other side of the machine.
3. Remove the engine and leg supports from the machine.

Installing the Cables

Note: Exit the cables and wire harness on the right side of the center channel.

1. Connect the parking-brake cable to the parking-brake lever in the front section of the machine, run it through the center channel, and connect it to the parking-brake assembly in the rear section of the machine.
2. Adjust and tighten the screw and jam nut for the parking-break assembly.
3. Connect the throttle cable to the throttle lever in the front section of the machine, run it through the center channel, and connect it to the throttle assembly in the rear section of the machine.
4. Install the choke cable through the dash board and run it through the center channel, and connect it to the choke assembly on the engine.
5. Connect the shift cable to the shift lever in the front section of the machine, run it through the center channel, and connect it to the shift assembly in the rear section of the machine.
6. Loosely installing the 2 bolts (3/8 x 3/4 inch), 16 bolts (1/4 x 1/2 inch), and 2 flange nuts (3/8 inch) to secure the bottom plate to the center channel.

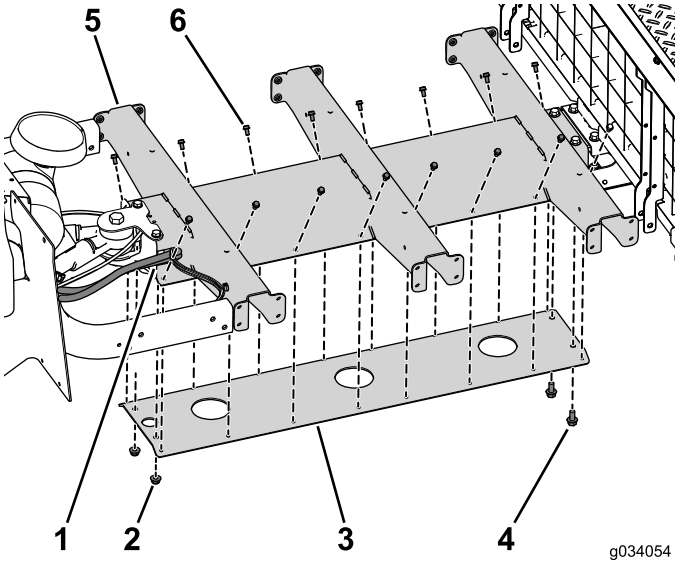

Figure 30

Some parts are hidden for illustrative purposes.

1. Cable exit
2. Flange nuts (3/8 inch)
3. Bottom plate
4. Bolt (3/8 x 3/4 inch)
5. Center channel
6. Bolt (1/4 x 1/2 inch)

7. Install the remaining channel hardware (Figure 31).

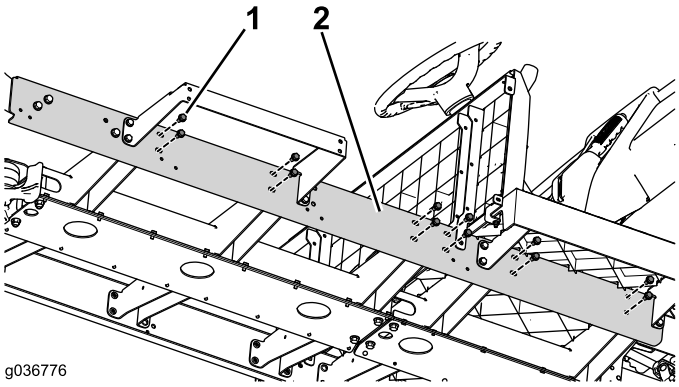

Figure 31

1. Bolt (5/16 x 3/4 inch)
2. Center channel

8. Replace any cable ties that you removed to access the area under the dashboard.
9. Use the 10 screws (1/4 x 1-1/4 inches) to secure the dashboard to the machine (Figure 32).

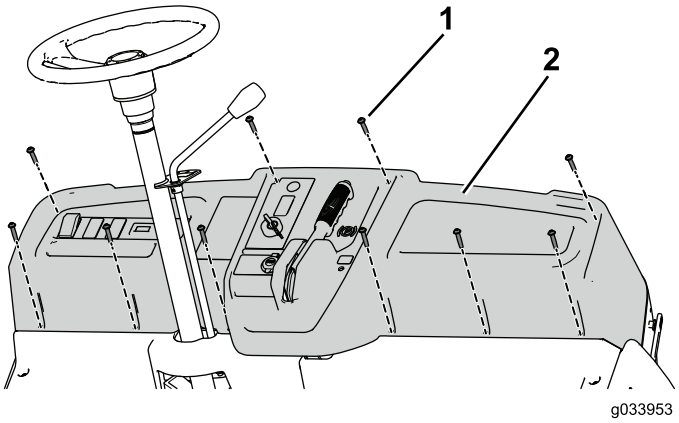

Figure 32

1. Screw (1/4 x 1-1/4 inches)
2. Dashboard

10. Verify that all the hardware you installed in this procedure is securely tightened.

Adjusting the Throttle Cable

1. Use the jam nuts on the cable to adjust and secure the cable to the bracket (Figure 33).

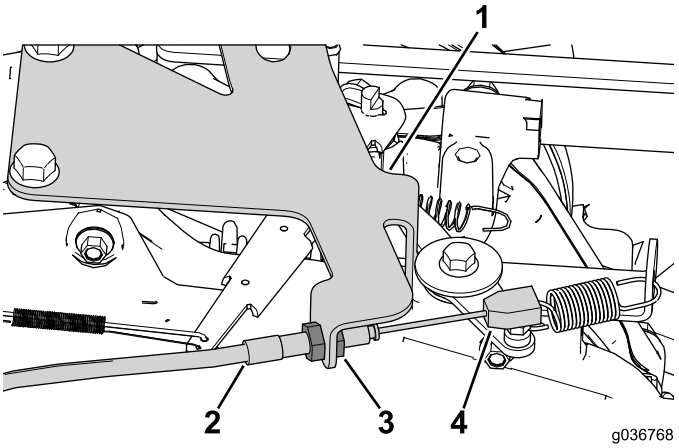

Figure 33

1. Throttle-cable bracket
2. Throttle cable
3. Jam nut (2)
4. Throttle assembly

2. Adjust the throttle cable to operate between 3650 to 3750 rpm at the high throttle position.

Adjusting the Choke Cable

1. Place the choke control into the OFF position.
2. Position the bend on the end of the throttle cable into the choke assembly (Figure 34).

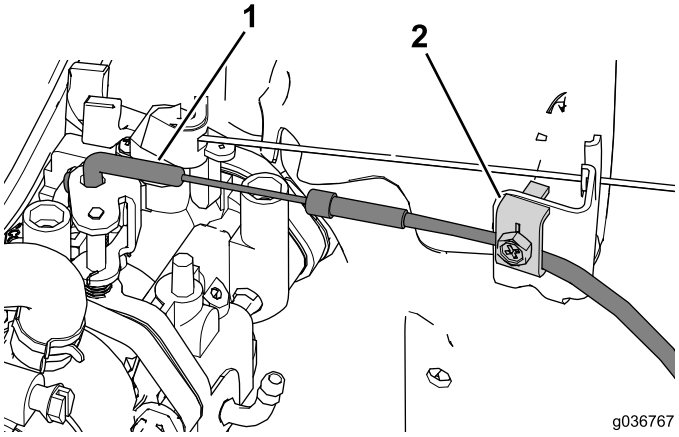

Figure 34

1. Cable bend
2. Cable clamp

Note: Ensure that the choke plate is in the fully-open position when you secure the chock cable.

3. Use the cable clamp to secure the choke cable into position (Figure 34).

Adjusting the Shift Cable

1. Set the shift lever to the middle position.
2. Thread the ball-joint assembly onto the shift cable and secure it to the shift-arm assembly (Figure 35).

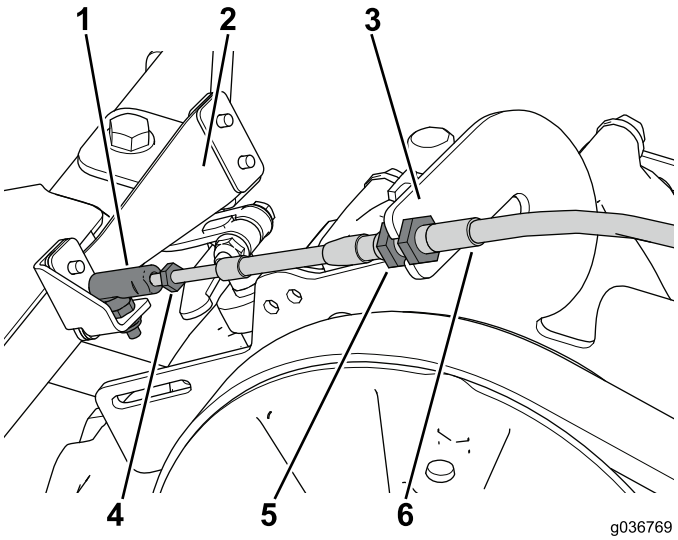

Figure 35

1. Ball-joint assembly
2. Shift-arm assembly
3. Shift-cable bracket
4. Jam nut
5. Jam nuts
6. Shift cable

3. Vary the cable travel between the bracket and shift-arm assembly until the cable engages into the desired shift position.
4. Use the jam nuts to secure the cable adjustment

Installing the Floor Plate

Use the 4 flange bolt (5/16 x 1-1/4 inches), 4 bolt (1/4 x 1-1/4 inches), and locknuts to secure the rear floor plate to the machine (Figure 36).

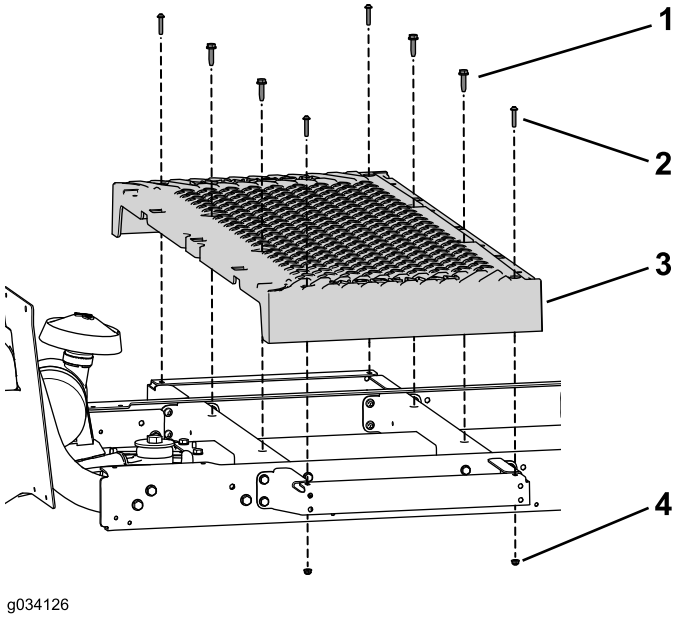

Figure 36

1. Flange bolt (5/16 x 1-1/4 inches)
2. Bolt (1/4 x 1-1/4 inches)
3. Floor plate
4. Locknut (1/4 inch)

Installing the Seat Supports

Note: Use the hardware that you retained from a previous step to complete the following procedure.

1. Use the 2 bolts (3/8 x 2-1/2 inches), spacers, and flange nuts to secure the seat supports on the front section of the machine (Figure 37).

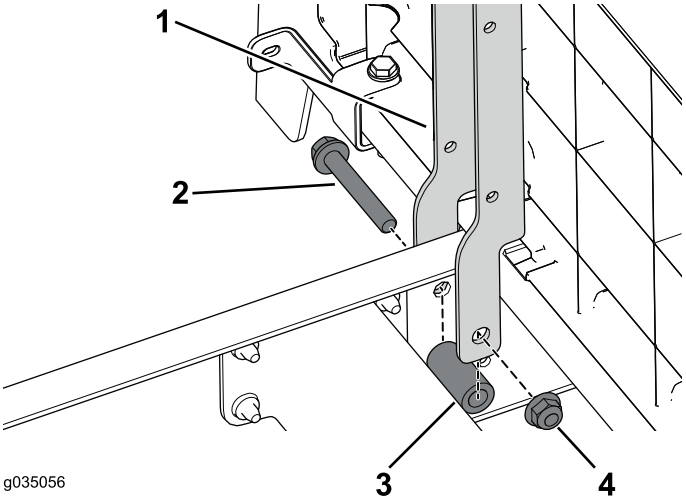

Figure 37

1. Seat support
2. Bolt (3/8 x 2-1/2 inches)
3. Spacer
4. Flange nut (3/8 inch)

2. Use the 2 bolts (3/8 x 2-1/2 inches) and flange nuts to secure the seat supports on the rear section of the machine (Figure 38).

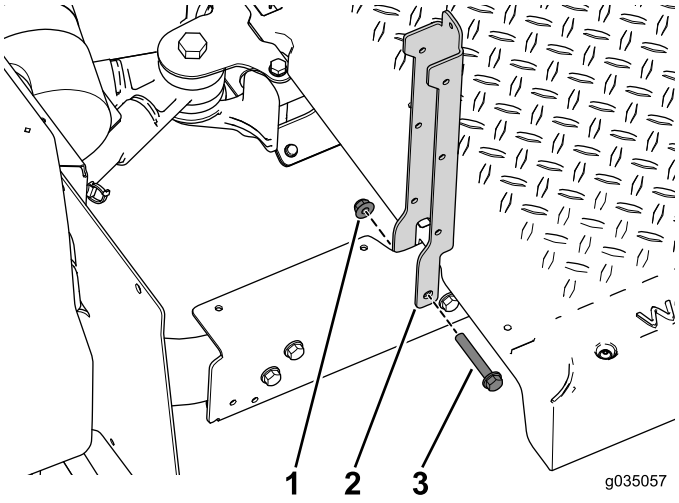

Figure 38

1. Flange nut (3/8 inch)
2. Seat support
3. Flange bolt (3/8 x 2-1/2 inches)

3. Use the 4 flange bolts (3/8 x 2-1/2 inches), spacers, and flange nuts to secure the left and right seat supports to the machine (Figure 39).

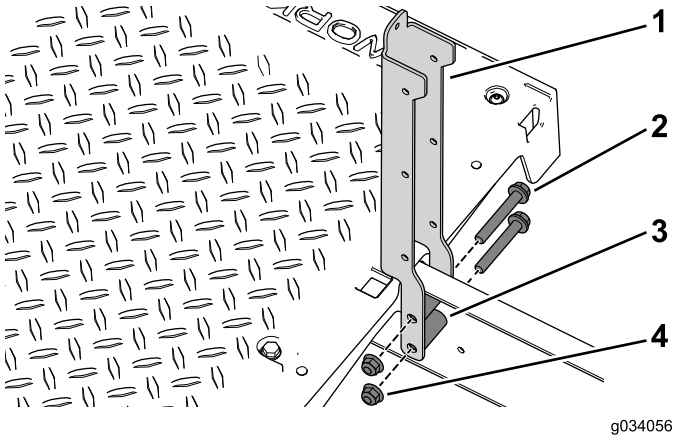

Figure 39

1. Seat support
2. Flange bolt (3/8 x 2-1/2 inches)
3. Spacer
4. Flange nut (3/8 inch)

4. Use the 2 bolt with washer assemblies (1/4 x 1/2 inch) to secure the angled-support bracket and seat-base panel to the left and right seat support (Figure 40).

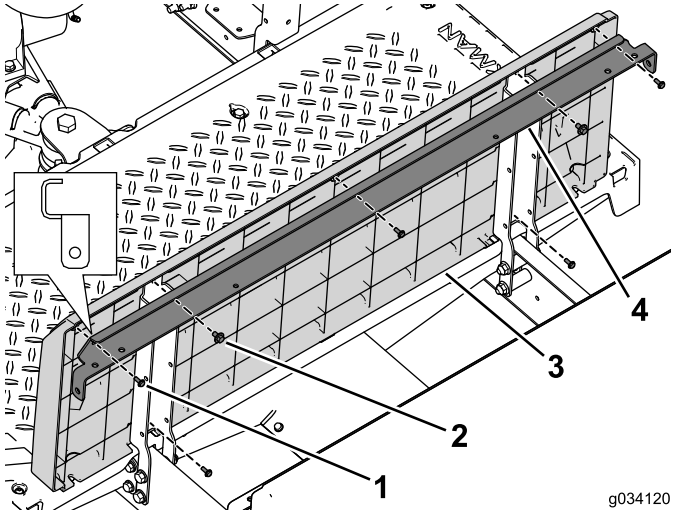

Figure 40

1. Screw (#10 x 1/2 inch)
2. Bolt with washer assembly (1/4 x 1/2 inch)
3. Seat-base panel
4. Angled-support bracket

5. Use the 5 screws (#10 x 1/2 inch) to secure the back panel to the seat brace and the seat supports (Figure 40).

6. Use the 2 bolts (1/4 x 2 inches), washer, and locknut to secure the left and right panel bracket the machine (Figure 41).

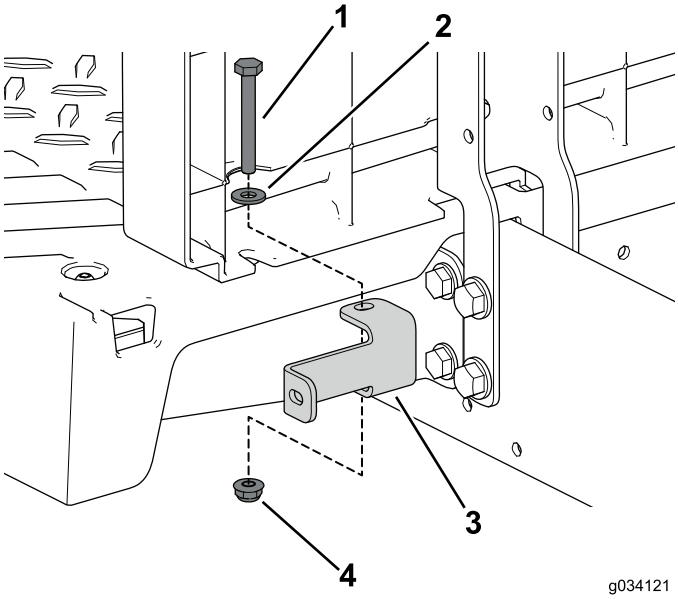

Figure 41

1. Bolt (1/4 x 2 inches)
2. Washer
3. Panel bracket
4. Locknut (1/4 inch)

7. Use the 2 bolt with washer assemblies (1/4 x 1/2 inch) to secure the support bracket and seat-base panel to the left and right seat support (Figure 42).

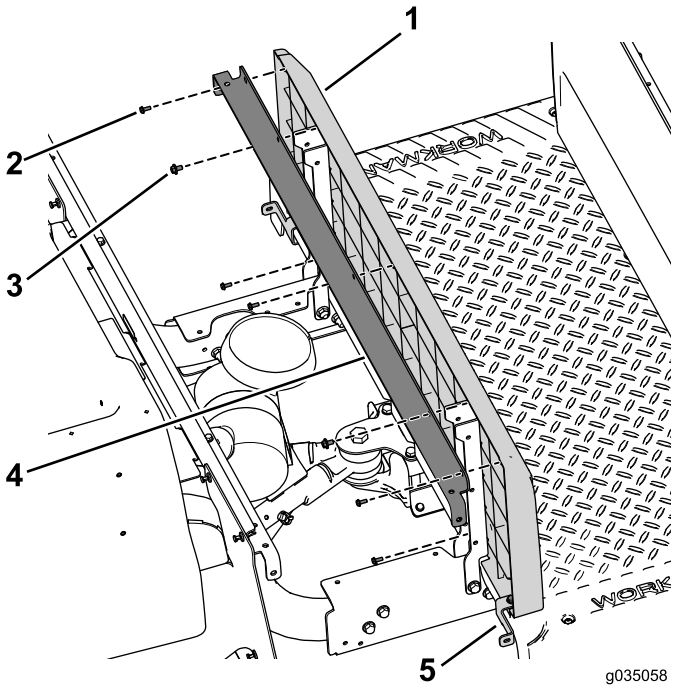

Figure 42

1. Seat-base panel
2. Screw (#10 x 1/2 inch)
3. Bolt with washer assembly
4. Support bracket
5. Panel bracket

8. Use the 2 bolts (1/4 x 2 inches), washer, and locknut to secure the left and right panel bracket the machine (Figure 42).

Installing the Side Panels

1. Use the 8 self-tapping screws (3/32 x 7/8 inch) to secure the left and right side panels from the kit to the front seat-base panels (Figure 43).

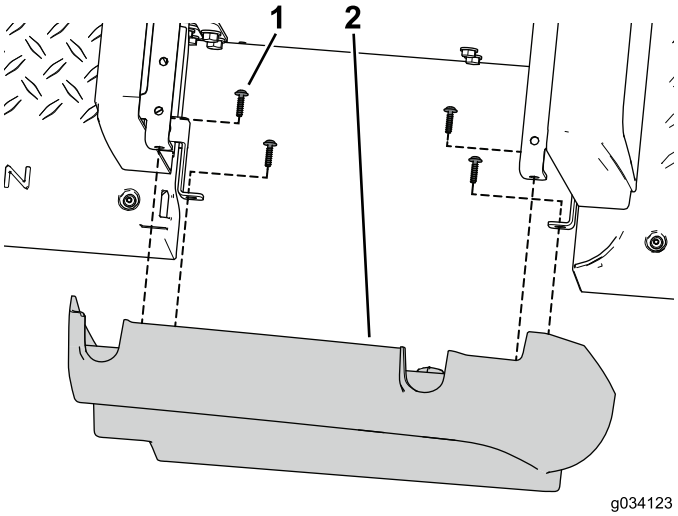

Figure 43

1. Self-tapping screw (3/32 x 7/8 inch)
2. Side plate

2. Use the 3 self-tapping screws to secure the opening cover to the side plate (Figure 44).

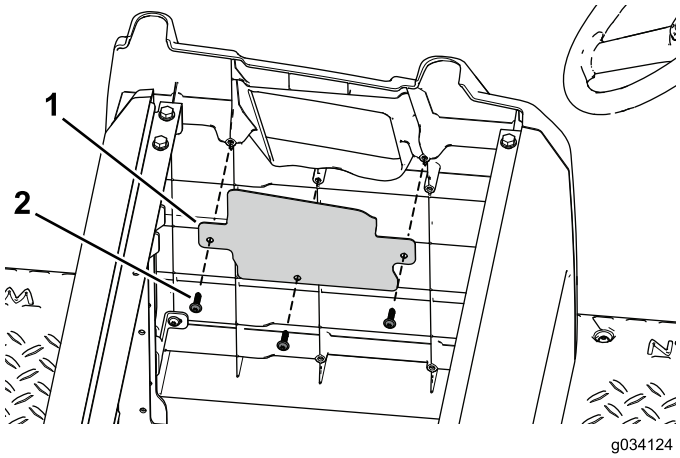

Figure 44

1. Opening cover
2. Self-tapping screw

3. Use the hardware you removed earlier to install the original right panel assembly to the rear seat-base panels (Figure 45).

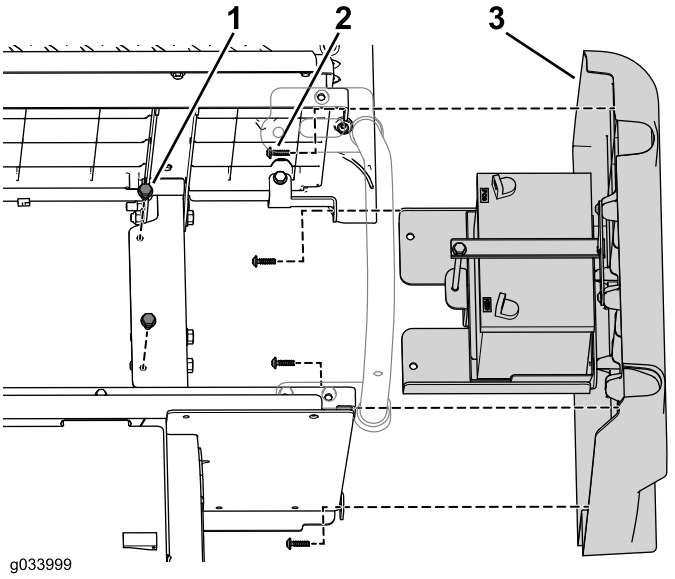

Figure 45

1. Flange bolt
2. Self-tapping screw
3. Right panel assembly

4. Use the hardware you removed earlier to install the original left panel assembly to the rear seat-base panels (Figure 46 and Figure 47).

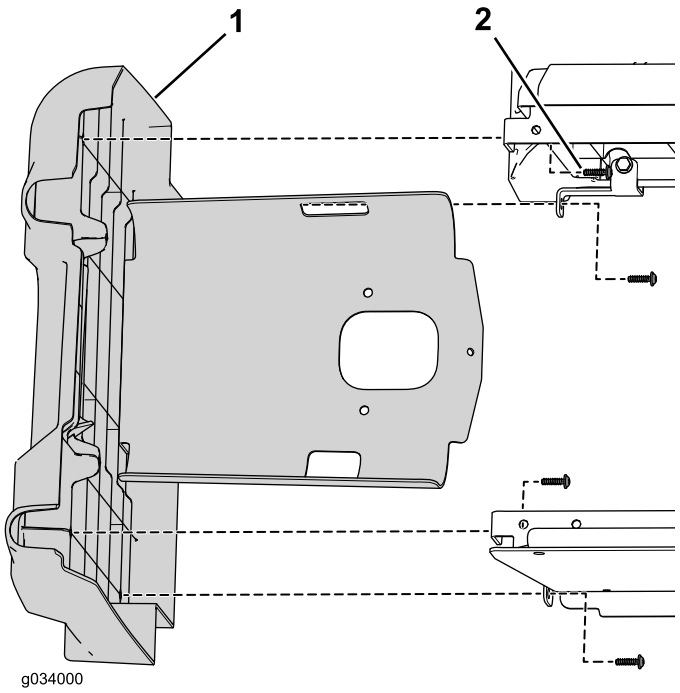

Figure 46

1. Left panel assembly
2. Self-tapping screw

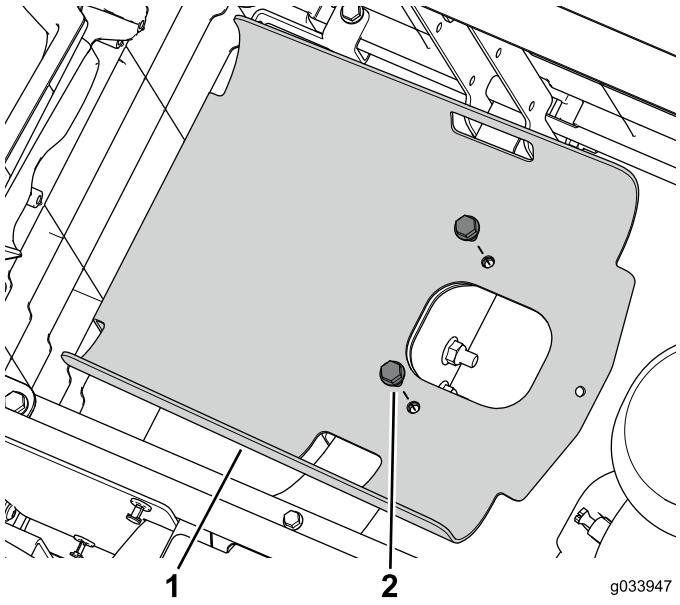

Figure 47

1. Tank tray
2. Flange bolt

Connecting the Battery

1. Use the bolt and nut to secure the positive (+) cable to the battery terminal (Figure 48).

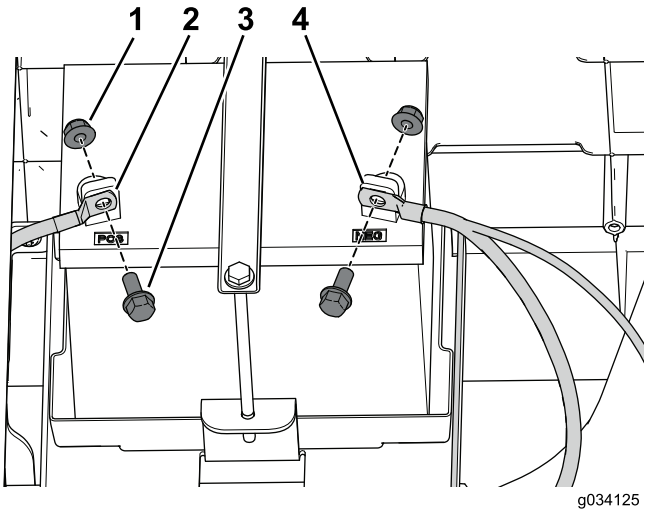

Figure 48

1. Nut
2. Positive cable
3. Bolt
4. Negative cable

2. Use the bolt and nut to secure the negative (–) cable to the battery terminal (Figure 48).

Connecting the Fuel Tank

1. Place the fuel tank on the tank tray (Figure 49).

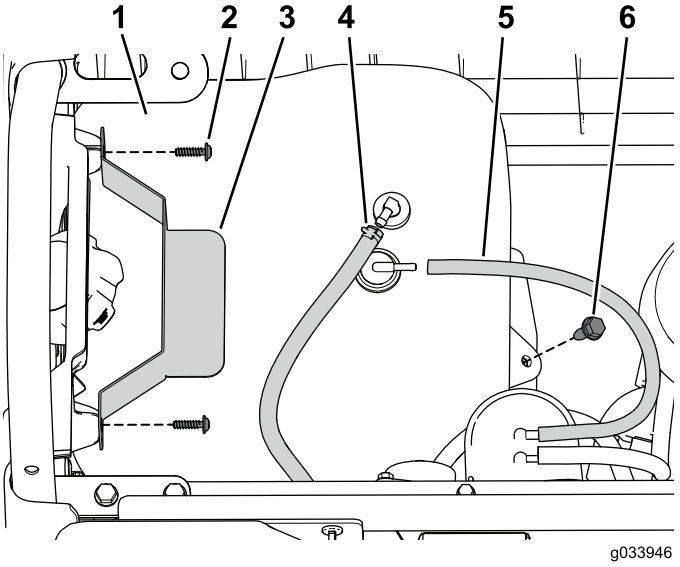

Figure 49

1. Fuel tank
2. Screw
3. Hold-down
4. Fuel line
5. Vent hose
6. Flange bolt

2. Connect the vent tube and fuel line to the tank (Figure 49).
3. Use the screws you remove earlier to secure the hold-down (Figure 49).

Securing the Hip Restraint

1. Use the flange bolt (3/16 x 3/4 inch) and flange nut that you removed earlier to secure the right, rear-hip restraint to the rear seat base (Figure 50).

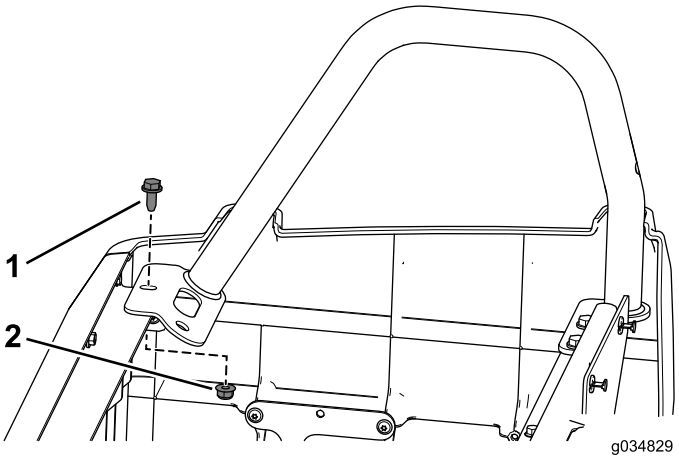

Figure 50

1. Flange bolt (3/16 x 3/4 inch)
2. Flange nut

2. Use the 3 flange bolt (3/16 x 3/4 inch) and flange nuts that you removed earlier to secure the rear, left-hip restraint to the rear seat base
3. Use the 6 flange bolts (3/16 x 3/4 inch) and flange nuts to secure the left and right hip restraints to the front seat base (Figure 51).

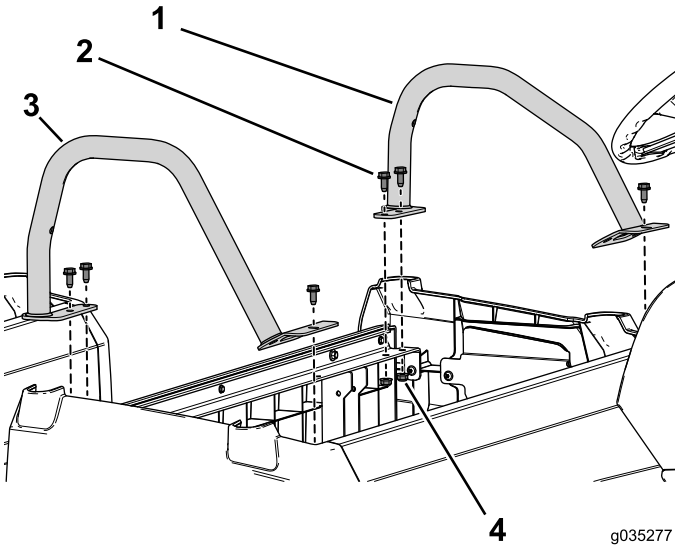

Figure 51

1. Hip restraint (short)
2. Flange bolt (3/16 x 3/4 inch)
3. Hip restraint (tall)
4. Flange nut

Installing the Seat Assembly

1. Contact your Toro dealer to obtain an additional seat assembly.
2. Install the original seat assembly to the rear seat row (Figure 52).

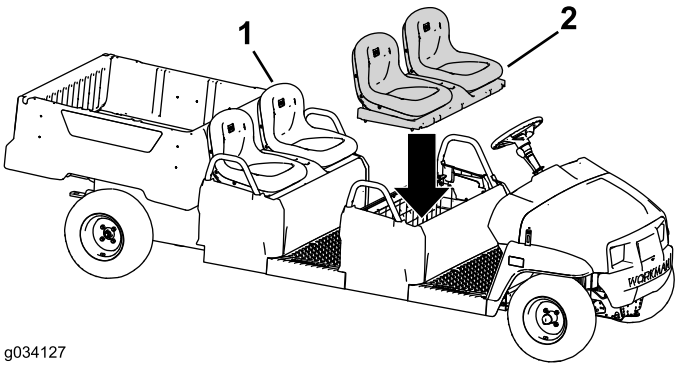

Figure 52

1. Original seat assembly
2. Additional seat assembly (bucket seat version shown)

3. Install the seat assembly to the front seat row (Figure 52).

Installing the Kit on a Machine with an Electric Motor

Removing the Side Covers

1. Remove the front flange bolt and flange nut on the right hip restraint (Figure 53).

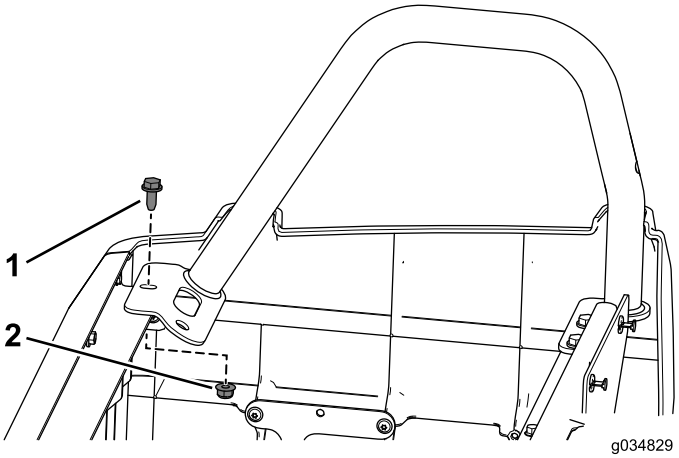

Figure 53

1. Flange bolt (3/16 x 3/4 inch)
2. Flange nut

2. Remove the 3 flange bolts and flange nuts that securing the left hip restraint.
3. Remove the 4 self-tapping screws securing the right side cover to the machine (Figure 54).

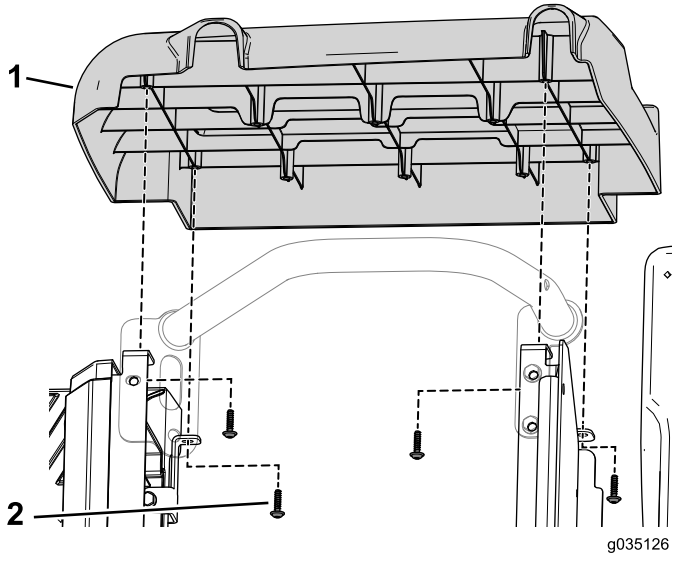

Figure 54

1. Side-cover assembly
2. Self-tapping screw

4. Remove the 2 bolts securing the charger bracket to the battery tray (Figure 55).

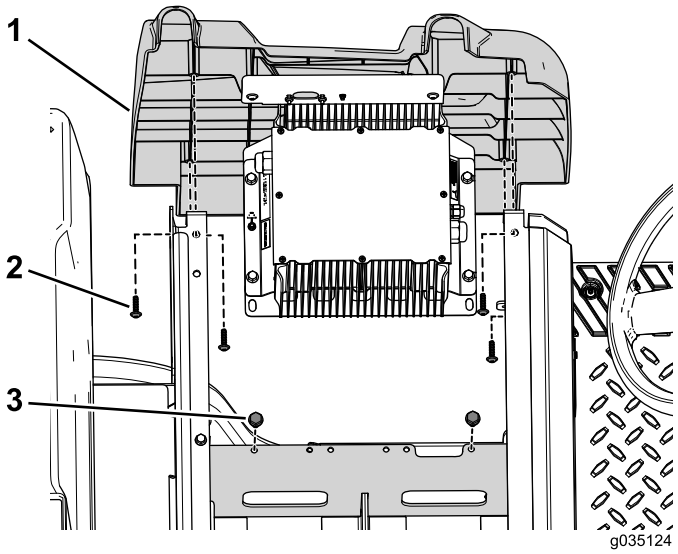

Figure 55

1. Side-cover assembly
2. Self-tapping screw
3. Bolt

5. Remove the 4 self-tapping screws securing the left side cover to the machine (Figure 55).

Removing the Batteries

Note: Retain all the hardware that you remove in this procedure.

1. Remove the flange nut, battery hold down, and washer securing the batteries to the battery tray (Figure 56).

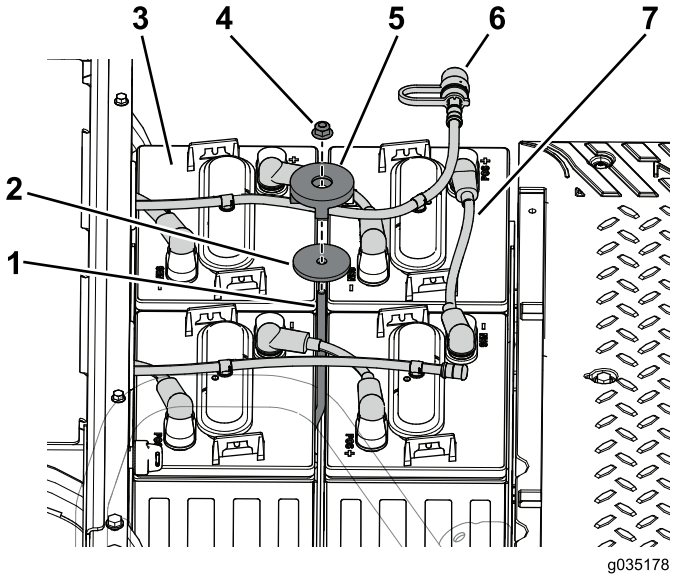

Figure 56

1. Hold-down rod
2. Washer
3. Battery
4. Locknut
5. Hold down
6. Watering house
7. Battery cable

2. Disconnect the watering hose from the batteries in the front battery tray (Figure 56).

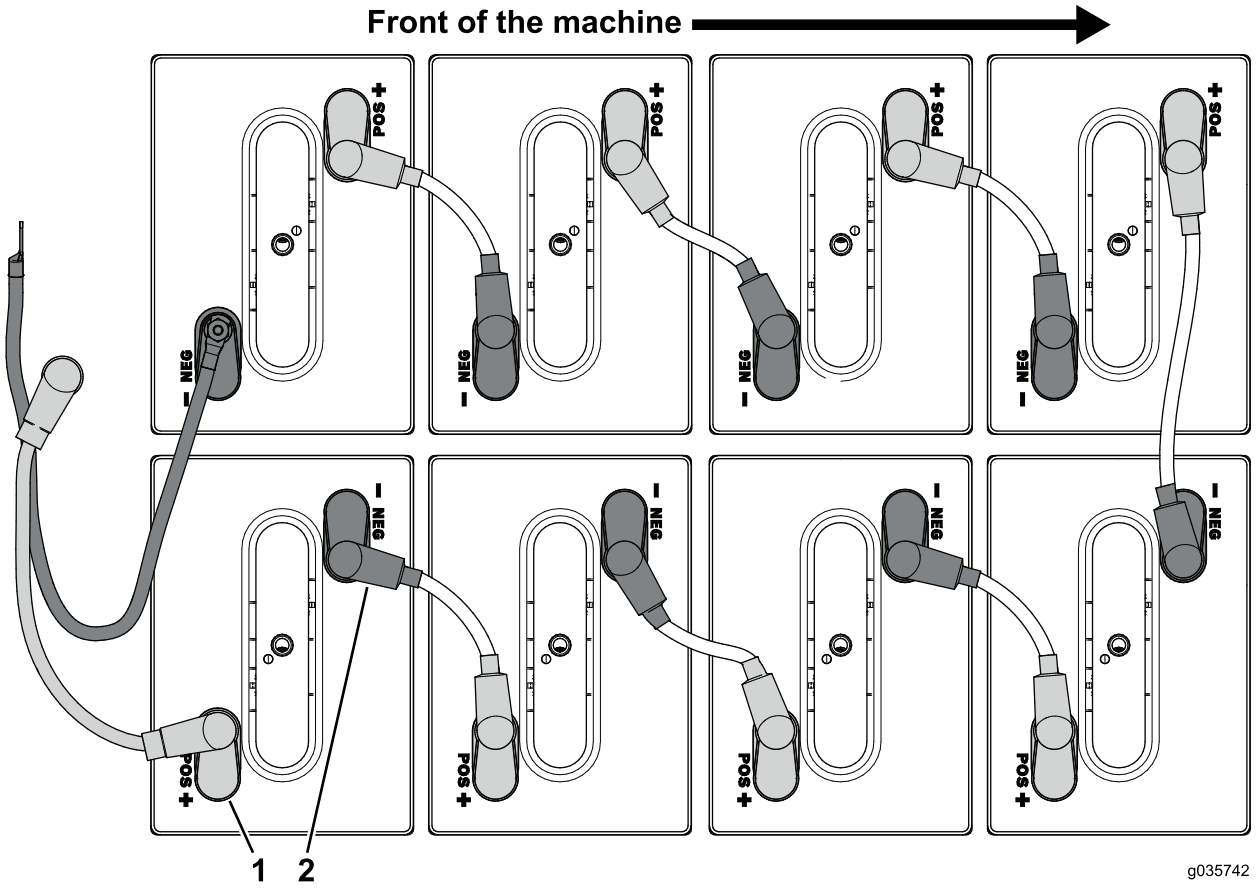

Figure 57

1. Positive (+) terminal
2. Negative (–) terminal

3. Disconnect the battery cables connected to the positive (+) terminal on the batteries in the front battery tray (Figure 57).
4. Disconnect the battery cables connected to the negative (–) terminal on the batteries in the front battery tray (Figure 57).

5. Remove the 2 screws and nuts that secure the fuse block to the front battery tray.

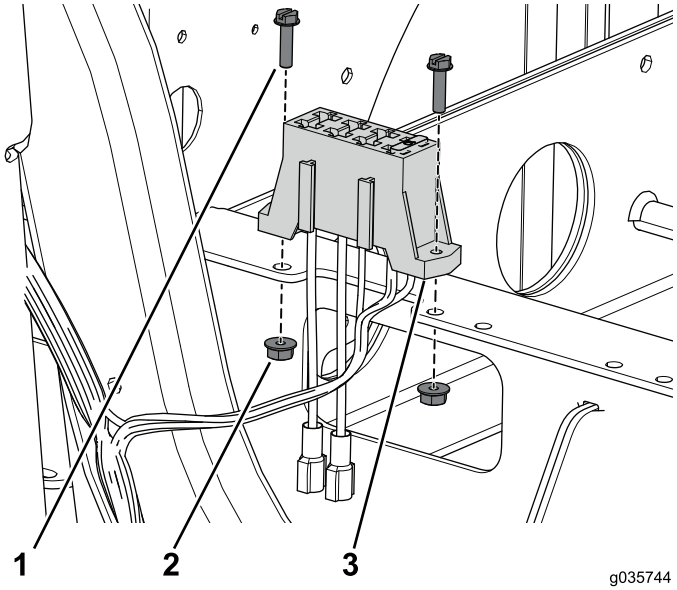

Figure 58

1. Screw (#10 x 3/4 inch)
2. Nut (#10)
3. Fuse block

6. Remove the 4 bolts securing the battery tray to the machine (Figure 59).

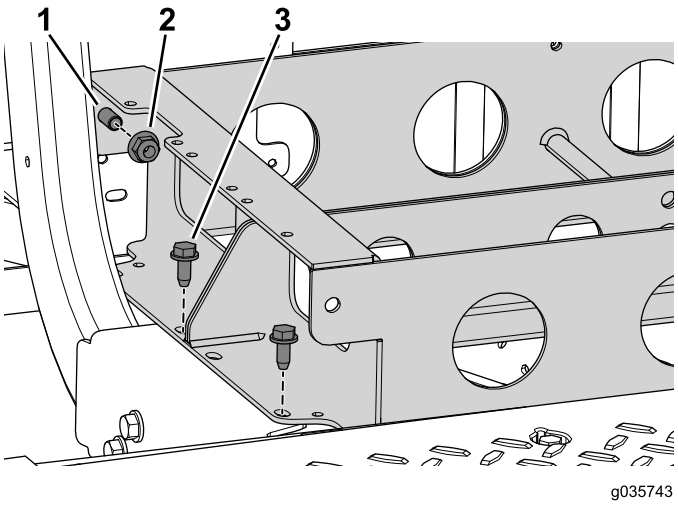

Figure 59

1. Bolt
2. Flange nut (3/8 inch)
3. Bolt (3/8 x 3/4 inch)

7. Remove the 2 flange nuts, but not the 2 bolts, that connect the front and rear battery tray (Figure 59).

Important: Do not remove the 2 bolts that are used connect the front and rear battery trays together.

Disconnecting the Parking-Brake Cable

1. Loosen the jam nut and then turn the adjustment screw 2 turns counter clockwise on both rear-brake calipers (Figure 60).

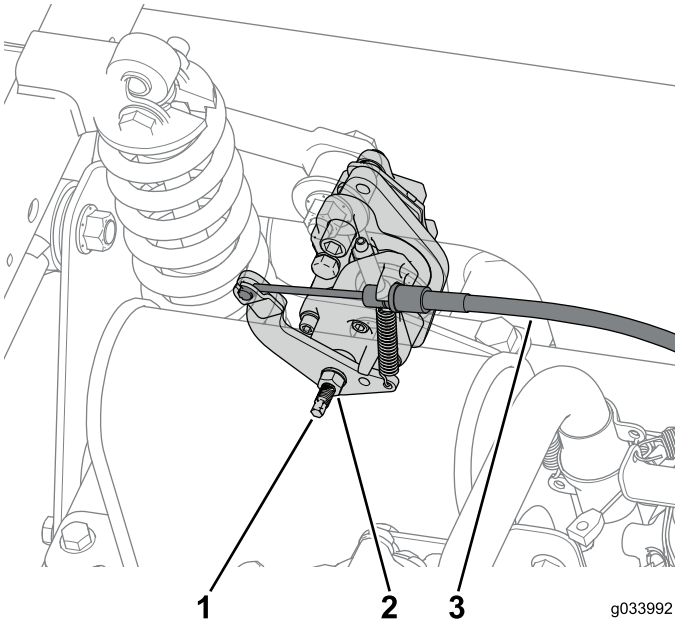

Figure 60

1. Adjustment screw
2. Jam nut
3. Brake cable

2. Disconnect the parking-brake cable connected to each brake caliper (Figure 60).
3. Remove the 10 screws (1/4 x 1-1/4 inches) to partially remove the dashboard and disconnect the parking brake (Figure 61).

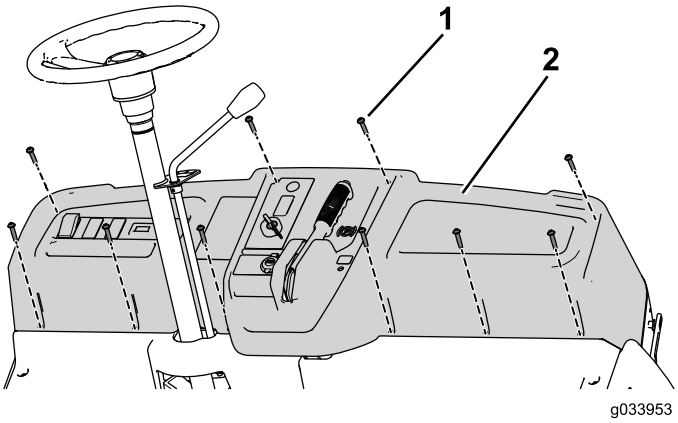

Figure 61

1. Screw (1/4 x 1-1/4 inches)
2. Dashboard

Note: You many need to remove the cable ties that prevent you from partially removing the dashboard. You will need to replace the cable ties in a later step.

Separating the Machine

Note: Retain all the hardware that you remove in this procedure.

1. Install the support leg to the machine (Figure 62).

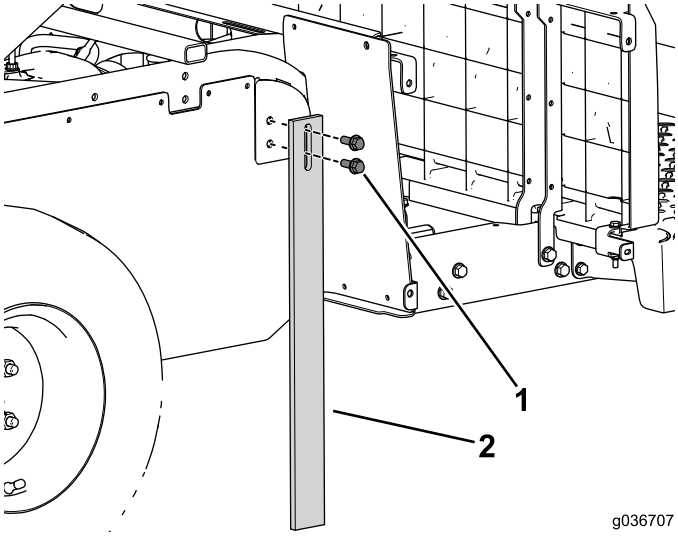

Figure 62

1. Flange bolt (3/8 x 1 inch)
2. Support leg

2. Use a floor jack under the center channel to support the front of the machine (Figure 63).

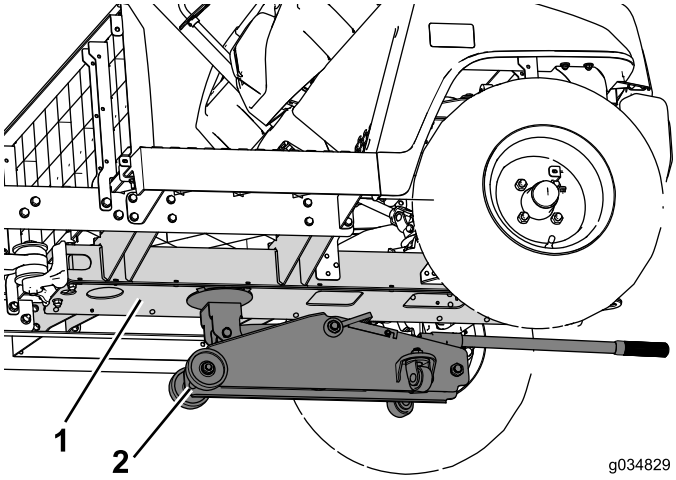

Figure 63

1. Center channel
2. Floor jack

3. Remove the flange bolts (3/8 x 2-1/2 inches) and nuts that secure the side rail to the machine (Figure 64). Do this on both sides of the machine.

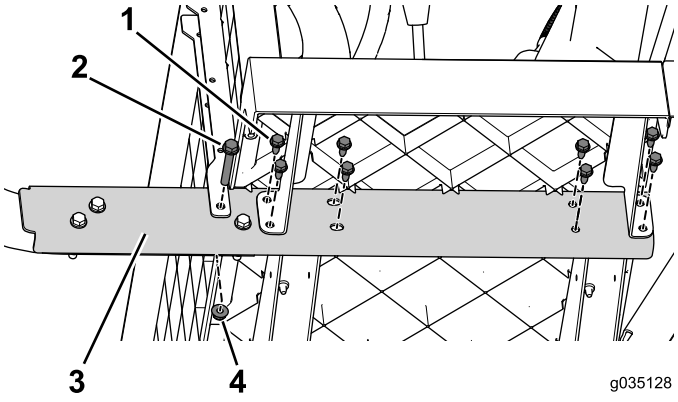

Figure 64

1. Flange bolt (3/8 x 2-1/2 inches)
2. Flange bolt (5/16 x 3/4 inch)
3. Side rail
4. Flange nut (3/8 inch)

4. Working from front to back, remove the flange bolts (5/16 x 3/4 inch) that secure the side rail to the machine (Figure 64). Do this on both sides of the machine.
5. Remove the 3 flange bolts (3/8 x 2-1/2 inches) and nuts (Figure 65). Do this on both sides of the machine.

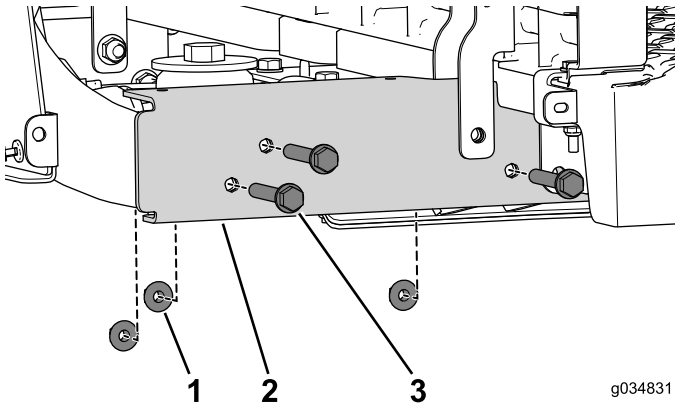

Figure 65

1. Flange nut (3/8 inch)
2. Side rail
3. Flange bolt (3/8 x 2-1/2 inches)

6. Remove the self-tapping screw that secures the tee fitting to the center channel (Figure 66).

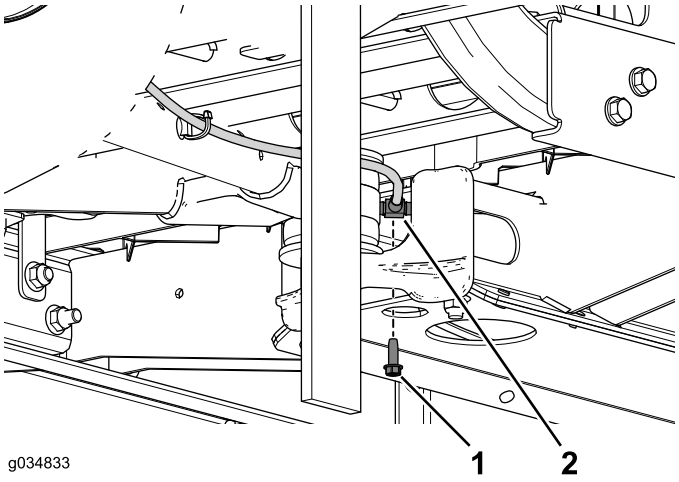

Figure 66

1. Self-tapping screw (1/4 x 3/4 inch)
2. Tee fitting

7. Remove the bolts and flange nuts that secure the swing arm mount to the center channel (Figure 67).

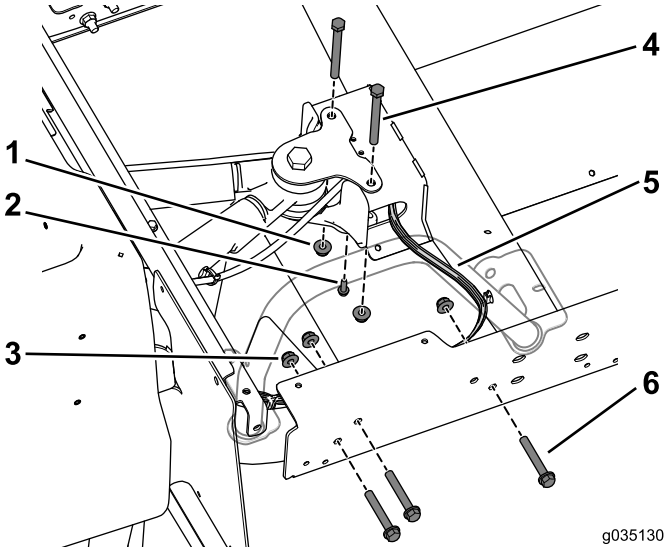

Figure 67

1. Flange nut (3/8 inch)
2. Self-tapping screw (1/4 x 3/4 inch)
3. Flange nut (3/8 inch)
4. Bolts (3/8 x 3-3/4 inches)
5. Wire harness
6. Bolts (3/8 x 2-1/2 inches)

8. Remove the cable ties used to secure the electrical and mechanical lines inside the center channel as you separate the machine.
9. Have an assistant help you move the front section forward and away from the rear section (Figure 68).

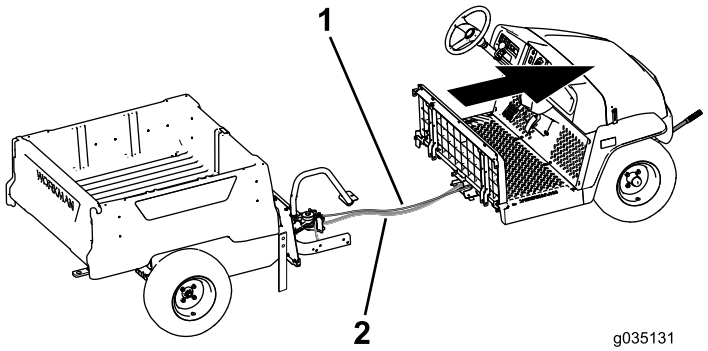

Figure 68

1. Brake line
2. Wire harness

Installing the Center Channel

Note: Use the hardware that you removed earlier to complete the following procedure.

1. Use the 4 flange bolts (3/8 x 3/4 inch) to loosely install the top and bottom connection plates to the center channel on the front section (Figure 69).

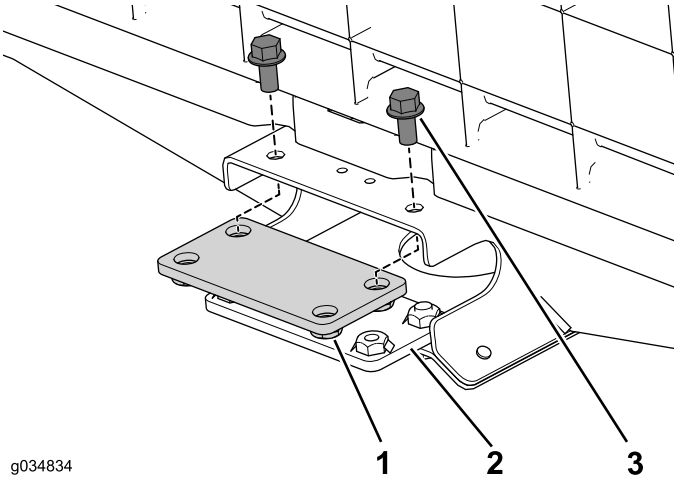

Figure 69

1. Connection plate (top)
2. Connection plate (bottom)
3. Flange bolt (3/8 x 3/4 inch)

2. Loosely install the extension rail to the right side of the machine (Figure 70).

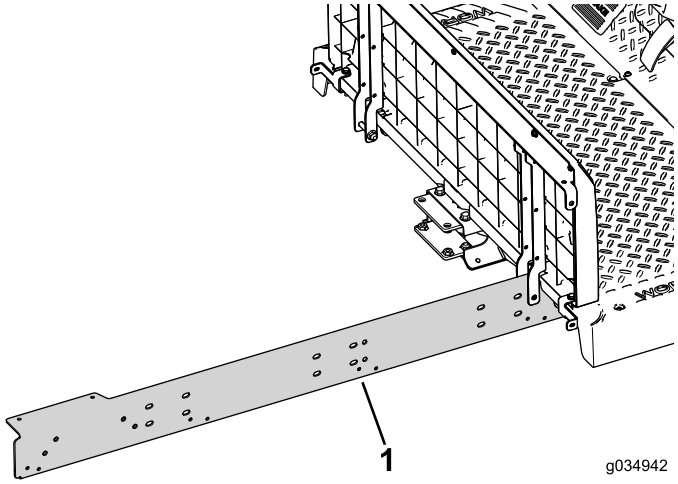

Figure 70

1. Extension rail

3. Use the 2 bolts (5/16 x 3/4 inch) to loosely install the extension rail to the center channel to the front section of the machine (Figure 71).

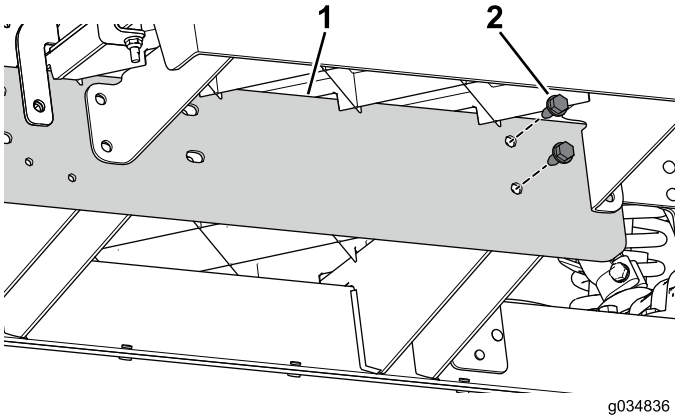

Figure 71

1. Extension rail
2. Bolts (5/16 x 3/4 inch)

4. Insert the 2 bolts (3/8 x 3-3/4 inches) and washers through the center channel and rear mount (Figure 72).

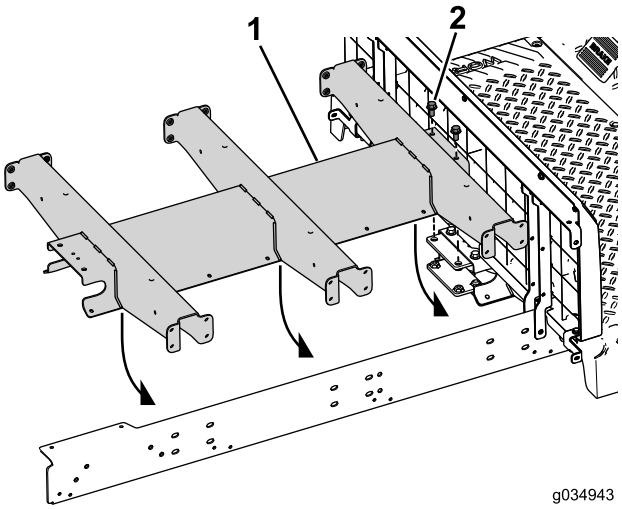

Figure 72

1. Channel extension
2. Bolt (3/8 x 3/4 inch)

5. Loosely install the extension rail to the left side of the machine (Figure 73).

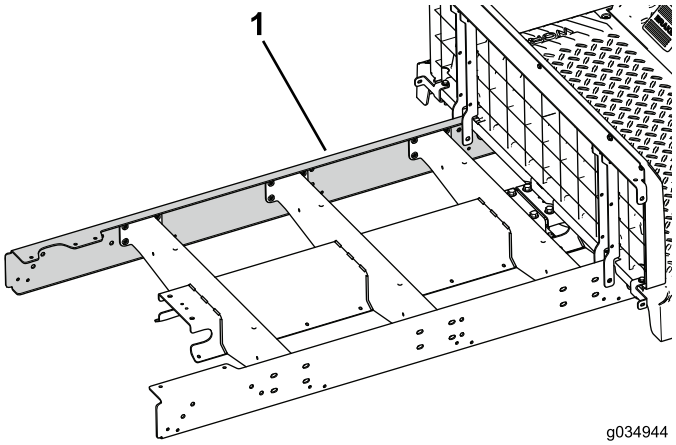

Figure 73

1. Extension rail

6. Use the 2 bolts (5/16 x 3/4 inch) to loosely install the extension rail to the center channel to the front section of the machine (Figure 74).

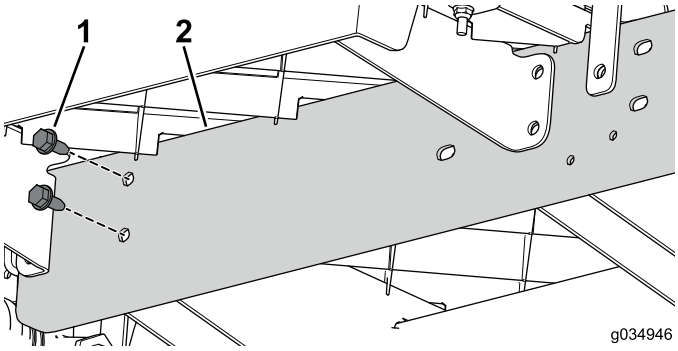

Figure 74

1. Bolts (5/16 x 3/4 inch)
2. Extension rail

7. Have an assistant to help you bring the front and rear sections of the machine together (Figure 75).

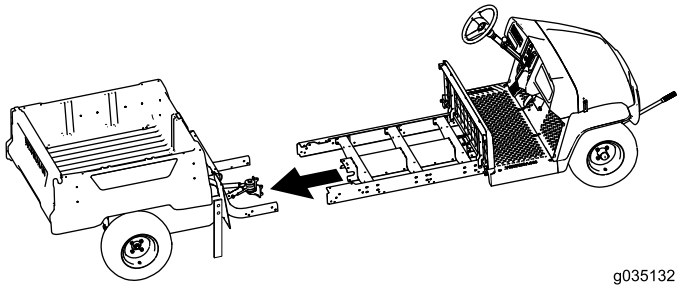

Figure 75

8. Use the 3 bolts (3/8 x 2-1/2 inches) and flange nuts to loosely install the extension rail to the rear frame (Figure 76). Do this on both sides of the machine.

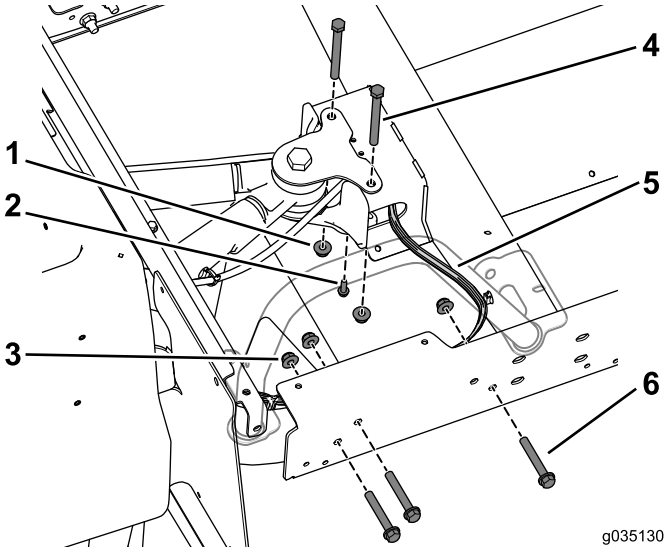

Figure 76

1. Flange nut (3/8 inch)
2. Self-tapping screw (1/4 x 3/4 inch)F
3. Flange nut (3/8 inch)
4. Bolts (3/8 x 3-3/4 inches)
5. Wire harness
6. Bolts (3/8 x 2-1/2 inches)

Note: Ensure that the wire harness exits the center channel on the right side (Figure 76).

9. Use the self-tapping screw (1/4 x 3/4 inch) to brake line tee to the center channel (Figure 76).
10. Use the 2 bolts (3/8 x 3-3/4 inches), and flange nuts to loosely install the center channel to the rear mount (Figure 76).

Installing the Side Supports

Note: Use the bolts and nuts that you removed in the previous sections to complete the following procedure.

1. Use the 4 bolts (5/16 x 3/4 inch) to loosely install the platform support to the center channel (Figure 77).

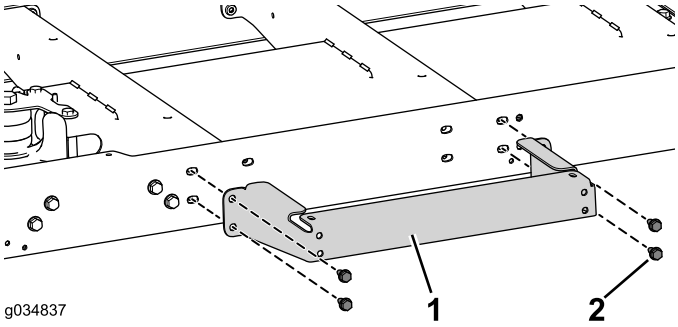

Figure 77

1. Platform support
2. Bolts (5/16 x 3/4 inch)

2. Perform the previous step on the other side of the machine.

Installing the Cables

Note: Exit the cables and wire harness on the right side of the center channel.

1. Connect the parking-brake cable to the parking-brake lever in the front section of the machine, run it through the center channel, and connect it to the parking-brake assembly in the rear section of the machine.
2. Loosely install the 2 bolts (3/8 x 3/4 inch), 16 bolts (1/4 x 1/2 inch), and 2 flange nuts (3/8 inch) to secure the bottom plate to the center channel (Figure 78).

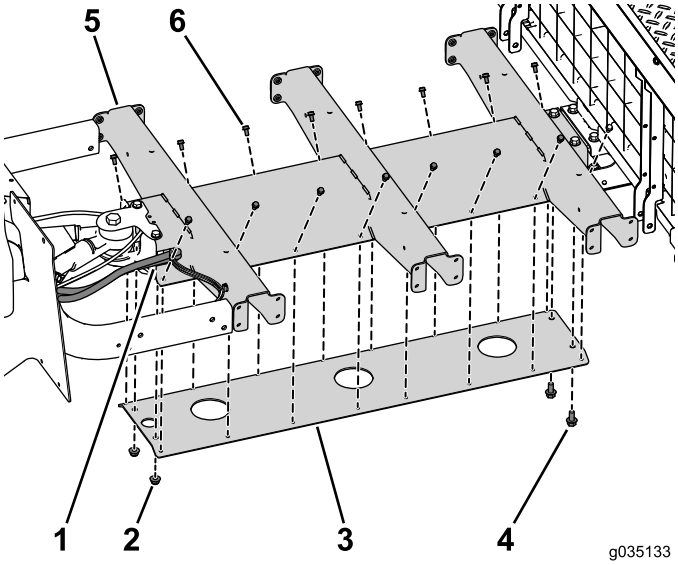

Figure 78

Some parts are hidden for illustrative purposes.

1. Cable exit
2. Flange nuts (3/8 inch)
3. Bottom plate
4. Bolt (3/8 x 3/4 inch)
5. Center channel
6. Bolt (1/4 x 1/2 inch)

3. Install the remaining channel hardware (Figure 79).

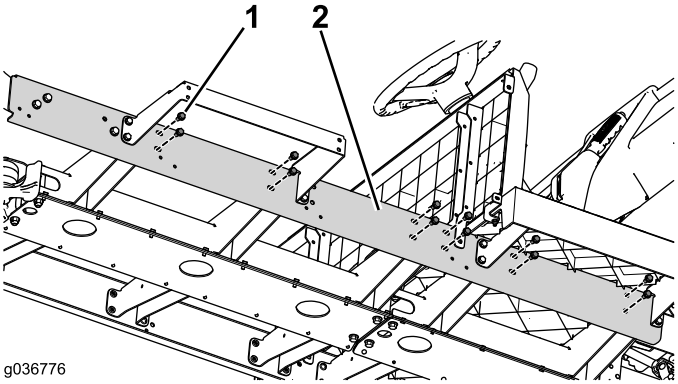

Figure 79

1. Bolt (5/16 x 3/4 inch)
2. Center channel

4. Replace any cable ties that you removed to access the area under the dashboard.
5. Use the 10 screws (1/4 x 1-1/4 inches) to secure the dashboard to the machine (Figure 80).

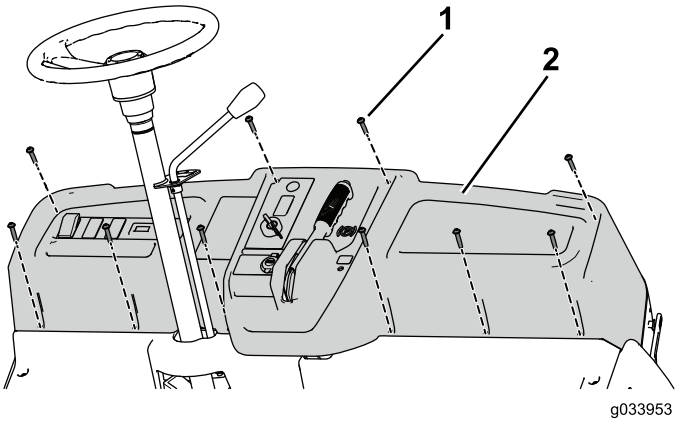

Figure 80

1. Screw (1/4 x 1-1/4 inches)
2. Dashboard

6. Securely tighten the hardware you installed on the bottom plate.

Installing the Floor Plate

Use the 4 flange bolt (5/16 x 1-1/4 inches), 4 bolt (1/4 x 1-1/4 inches), and locknuts to secure the rear floor plate to the machine (Figure 81).

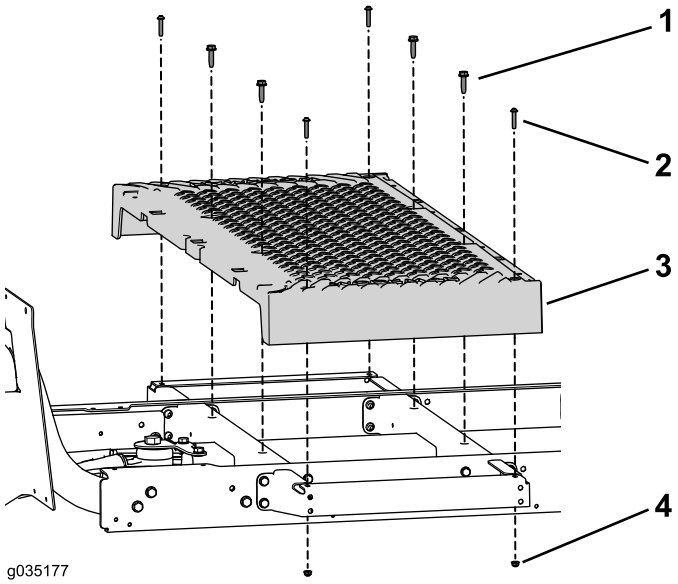

Figure 81

1. Flange bolt (5/16 x 1-1/4 inches)
2. Bolt (1/4 x 1-1/4 inches)
3. Floor plate
4. Locknut (1/4 inch)

Installing the Rear Seat Base

1. Use the 2 flange nuts and bolts to secure the rear and front battery trays together (Figure 82).

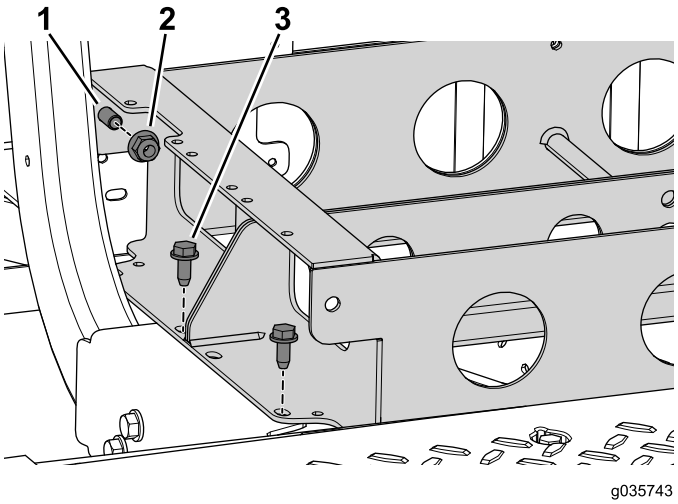

Figure 82

1. Bolt
2. Flange nut (3/8 inch)
3. Bolt (3/8 x 3/4 inch)

2. Use the 4 bolts (3/8 x 1 inch) to secure the front battery tray to the machine (Figure 82).
3. Use the 2 screws and nuts that secure the fuse block to the front battery tray (Figure 83).

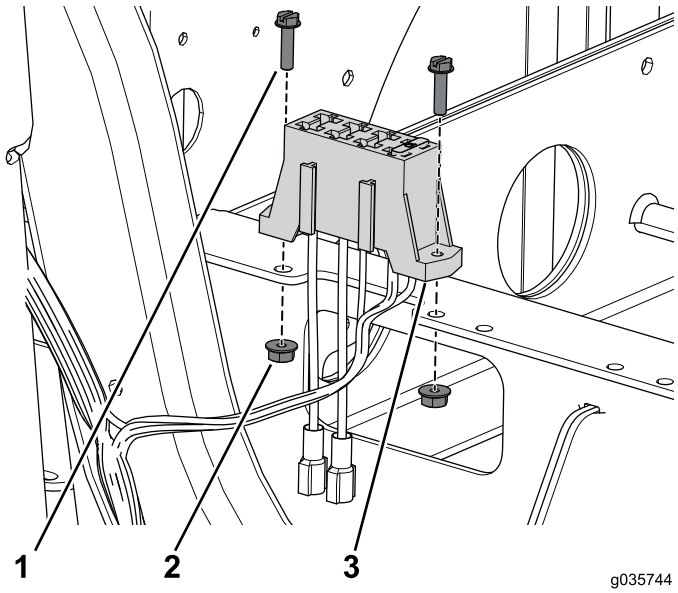

Figure 83

1. Screw (#10 x 3/4 inch)
2. Nut (#10)
3. Fuse block

4. Use the flange bolt (3/8 x 2-1/2 inches) and flange nut to secure the seat support (Figure 84).

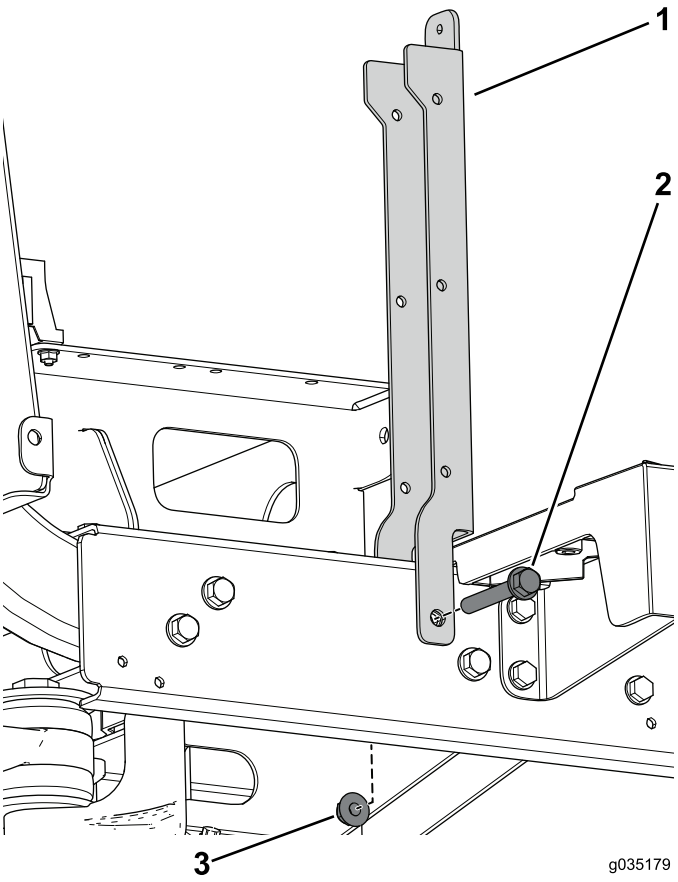

Figure 84

1. Seat support
2. Flange bolt (3/8 x 2-1/2 inches)
3. Flange nut (3/8 inch)

5. Use the 2 bolt with washer assemblies (1/4 x 1/2 inch) to secure the angled-support bracket and seat-base panel to the left and right seat supports (Figure 85).

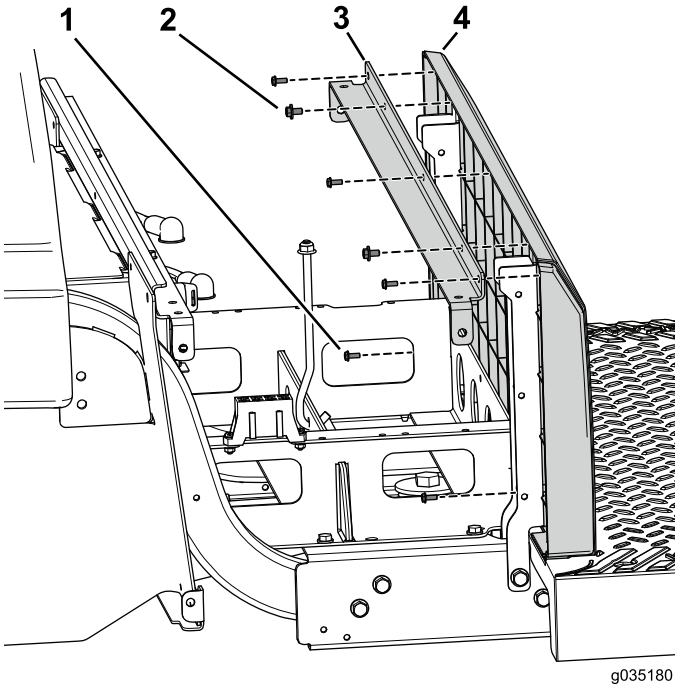

Figure 85

Some parts are hidden for illustrative purposes.

1. Screw (#10 x 1/2 inch)
2. Bolt with washer assembly
3. Support bracket
4. Seat-base panel

6. Use the 5 screws (#10 x 1/2 inch) to secure the back panel to the angled-support bracket and the seat supports (Figure 85).

7. Use the 2 bolts (1/4 x 2 inches), washer, and locknut to secure the left and right panel bracket the machine (Figure 86).

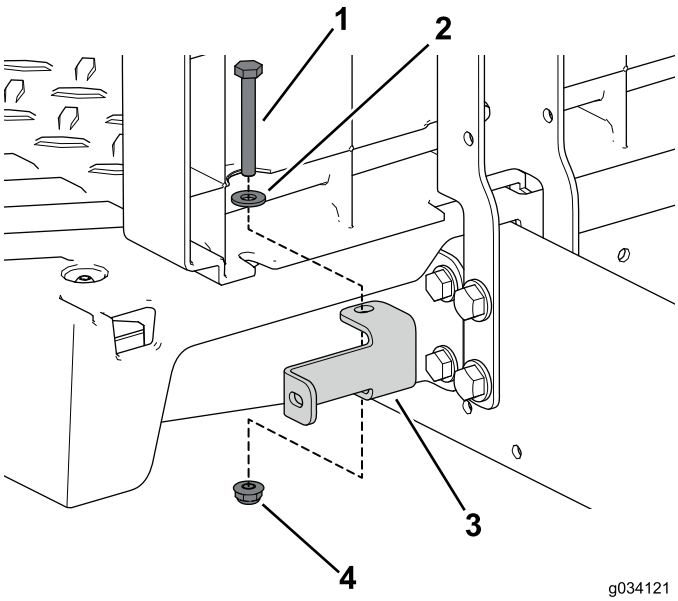

Figure 86

1. Bolt (1/4 x 2 inches)
2. Washer
3. Panel bracket
4. Locknut (1/4 inch)

8. Use the 4 self-tapping screws to secure the left side cover to the seat assembly (Figure 86).

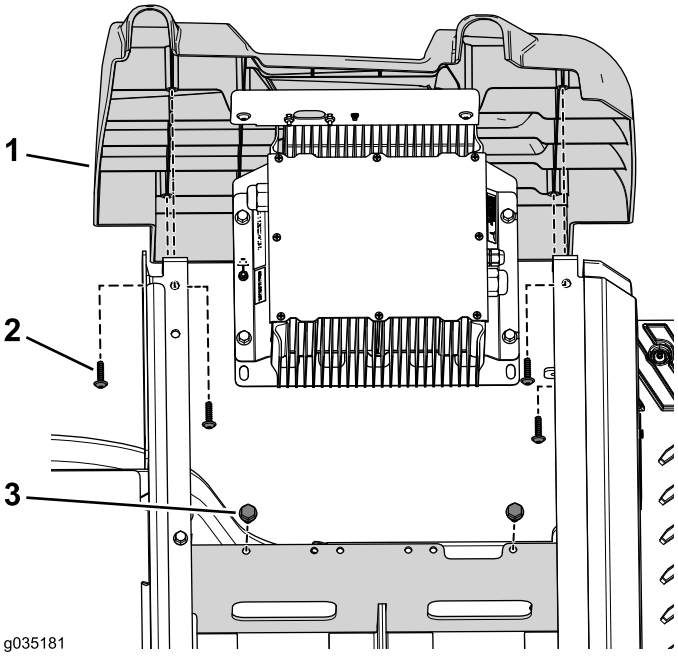

Figure 87

1. Side-cover assembly
2. Self-tapping screw
3. Bolt (3/8 x 3/4 inch)

9. Use the 2 bolts (3/8 x 3/4 inch) to secure the charger bracket to the battery tray (Figure 87).

10. Use the 4 self-tapping screws to secure the right side cover to the seat assembly (Figure 88).

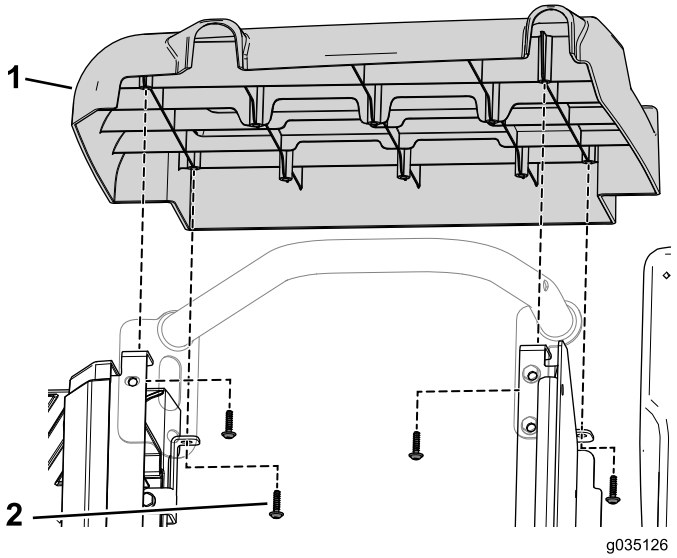

Figure 88

1. Side-cover assembly
2. Self-tapping screw

11. Use the flange bolt (3/16 x 3/4 inch) and flange nut that you removed earlier to secure the right, rear-hip restraint to the seat base assembly (Figure 89).

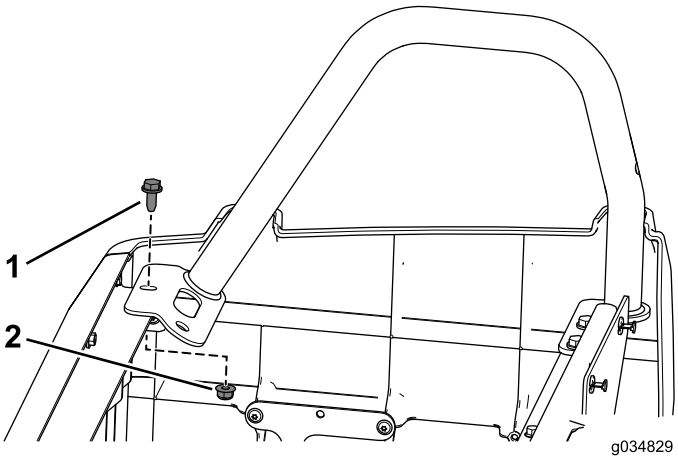

Figure 89

1. Flange bolt (3/16 x 3/4 inch)
2. Flange nut

12. Use the 3 flange bolt (3/16 x 3/4 inch) and flange nuts that you removed earlier to secure the left rear-hip restraint to the seat base assembly (Figure 90).

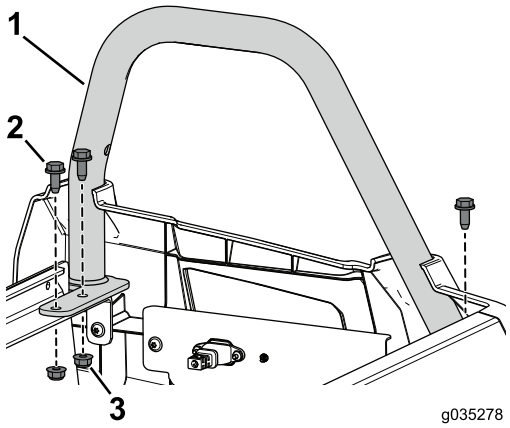

Figure 90

1. Hip restraint (tall)
2. Flange bolt (3/16 x 3/4 inch)
3. Flange nut

Installing the Front Seat Base

Note: Use the hardware that you removed earlier when required.

1. Use the 2 bolts (3/8 x 2-1/2 inches), spacers, and flange nuts to secure the left and right seat supports to the front section of the machine (Figure 91).

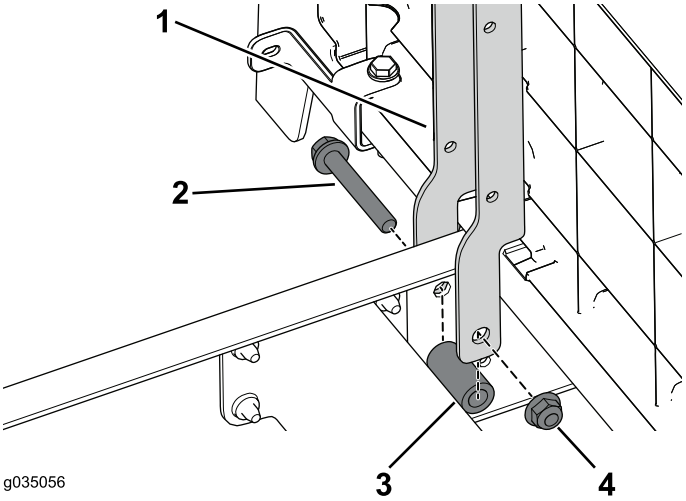

Figure 91

1. Seat support
2. Flange bolt (3/8 x 2-1/2 inches)
3. Spacer
4. Flange nut (3/8 inch)

2. Use the 4 flange bolts (3/8 x 2-1/2 inches), spacers, and flange nuts to secure the left and right seat supports to the machine (Figure 92).

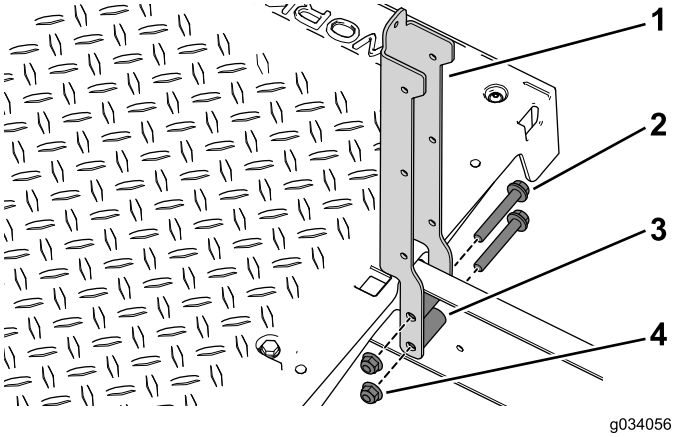

Figure 92

1. Seat support
2. Flange bolt (3/8 x 2-1/2 inches)
3. Spacer
4. Flange nut (3/8 inch)

3. Use the 2 bolt with washer assemblies (1/4 x 1/2 inch) to secure the angled-support bracket and seat-base panel to the left and right seat supports (Figure 93).

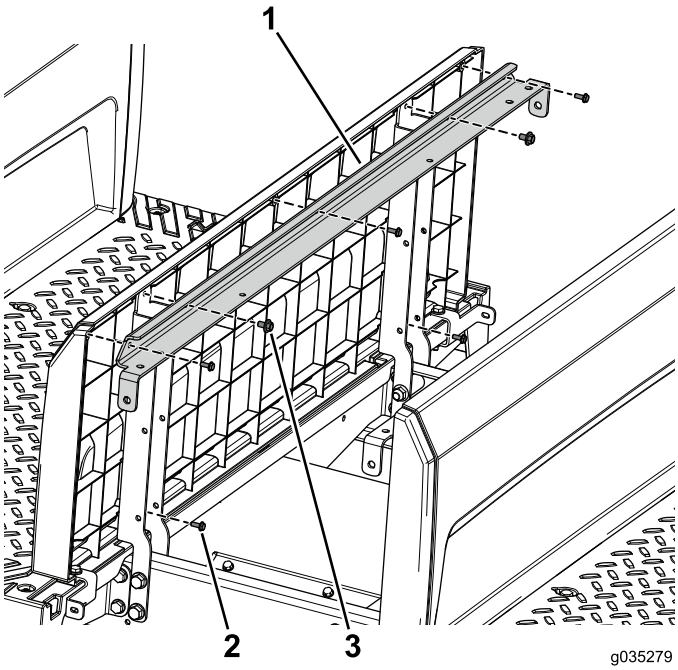

Figure 93

1. Support bracket
2. Screw (#10 x 1/2 inch)
3. Bolt with washer assembly

4. Use the 5 screws (#10 x 1/2 inch) to secure the back panel to the angled-support bracket and the seat supports (Figure 93).
5. Use the 8 self-tapping screws (3/32 x 7/8 inch) to secure the left and right side panels from the kit to the front seat base (Figure 94).

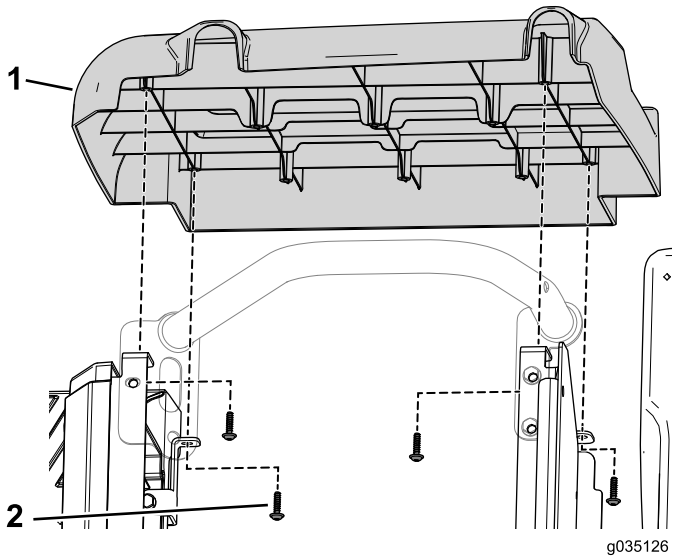

Figure 94

1. Side-cover assembly
2. Self-tapping screw

6. Use the 3 self-tapping screws to secure the opening cover to the side plate (Figure 95).

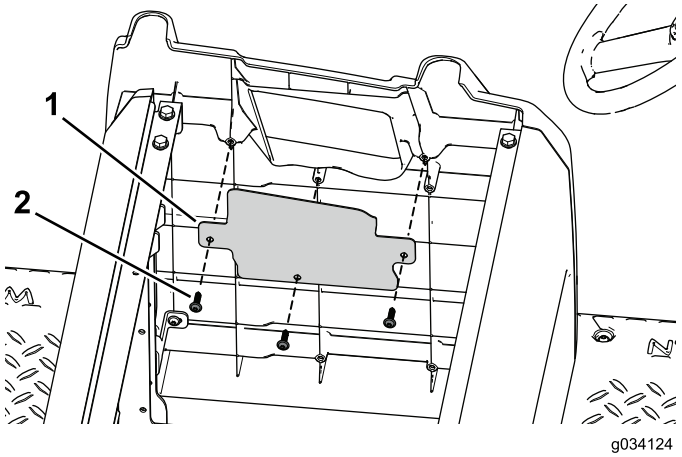

Figure 95

1. Opening cover
2. Self-tapping screw

7. Use the 6 flange bolts (3/16 x 3/4 inch) and flange nuts to secure the left and right hip restraints to the seat base (Figure 96).

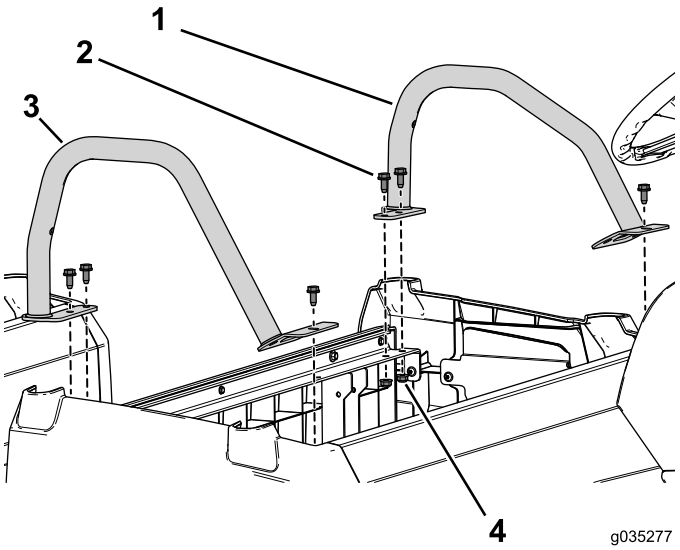

Figure 96

1. Hip restraint (short)
2. Flange bolt (3/16 x 3/4 inch)
3. Hip restraint (tall)
4. Flange nut

Installing the Batteries

1. Install the 4 batteries into the front battery tray (Figure 97).

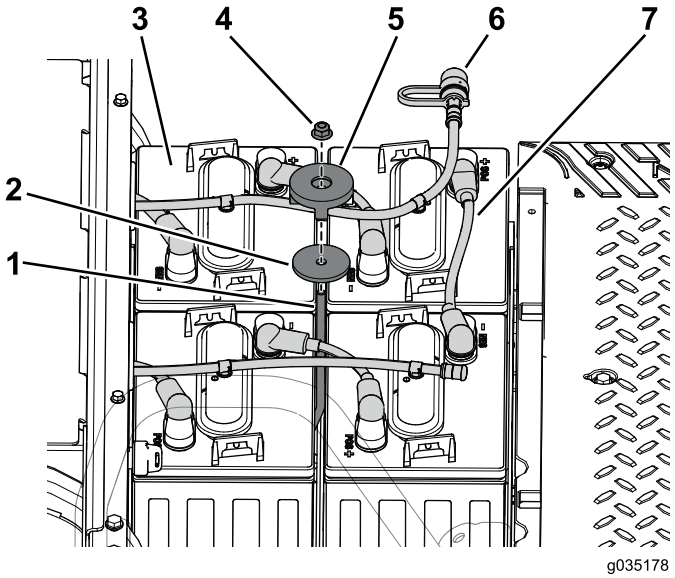

Figure 97

1. Hold-down rod
2. Washer
3. Battery
4. Locknut
5. Hold down
6. Watering house
7. Battery cable

2. Use the hold-down rod, washer, hold down, and locknut to secure the batteries to the battery tray (Figure 97).

3. Connect the battery cables to the positive (+) terminal to the batteries (Figure 97).

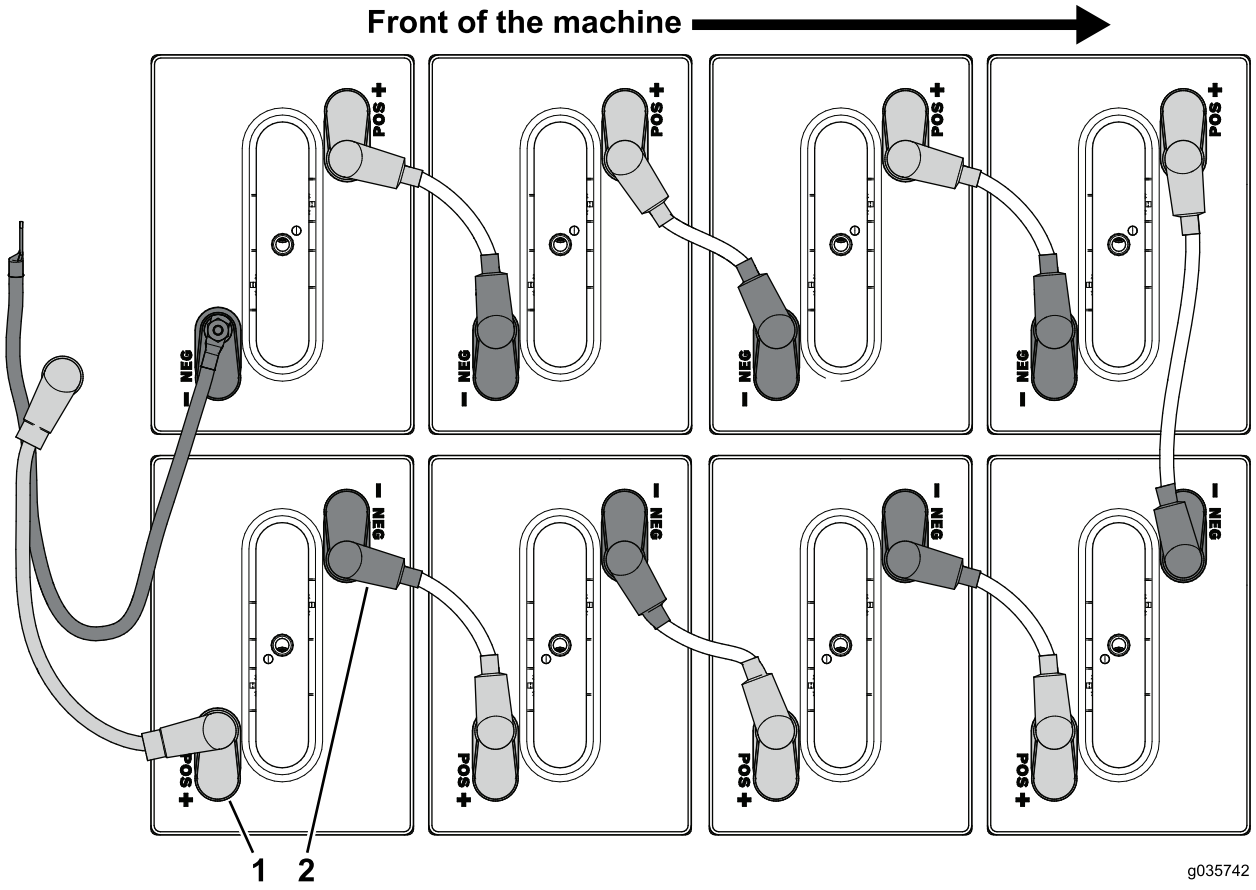

Figure 98

1. Positive terminal (+)
2. Negative terminal (–)

4. Connect the battery cables connected to the positive (+) terminal on the batteries in the front battery tray (Figure 98).
5. Connect the battery cables connected to the negative (–) terminal on the batteries in the front battery tray (Figure 98).
6. Install the watering house to the batteries (Figure 97).

Installing the Seat Assembly

1. Contact your Toro distributor to obtain an additional seat assembly.
2. Install the original seat assembly to the rear seat row (Figure 99).

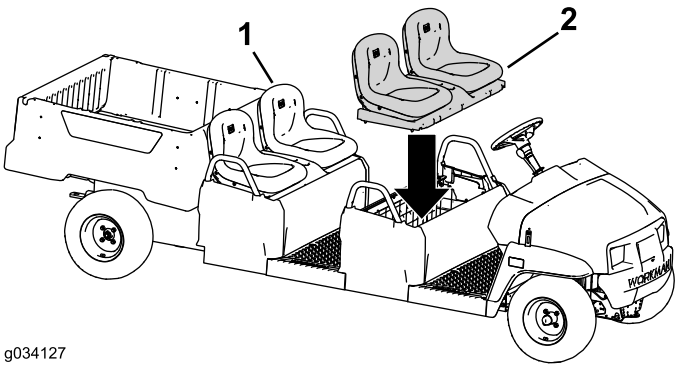

Figure 99

1. Original seat assembly
2. Additional seat assembly (bucket seat version shown)

3. Install the seat assembly to the front seat row (Figure 99).

Notes:



Count on it.