Form No. 3406-593 Rev A

TORO®

Count on it.

Parts Catalog

Brush Cutter

Model No. 23522—Serial No. 400000000 and Up

Register at www.Toro.com.
Original Instructions (EN)

CE

3406-593 A

Ordering Replacement Parts

To order replacement parts, please supply the part number, the quantity, and the description of each part desired.

Understanding Reference Numbers

Each identified part in an illustration has a reference number. The reference number for a part also appears in the parts list, along with other information about the part.

This catalog uses two special reference number formats, one to indicate parts in a service assembly and another to indicate the quantity of a given part in an illustration.

Service Assembly Reference Numbers

Parts in service assemblies have reference numbers in the form a:b. The a represents the reference number of the entire service assembly and the b represents a sequential number unique to each part within the service assembly.

For example, a wheel assembly might be identified by reference number 6, the tire by 6:1, the valve by 6:2, and the wheel by 6:3. When you order the assembly identified by reference number 6, you receive all parts identified by reference numbers 6:1,6:2, and 6:3. However, you may also order any part individually. Reference numbers of this type appear in illustration and in parts lists.

Reference Numbers Indicating Quantity

In an illustration, if a reference number indicates more than one part, the reference number has the form nX y. The n represents the quantity of the part, the X is the multiplication symbol, and the y represents the reference number.

For example, in an illustration, the reference number 2X 37 means that two of the parts identified by reference number 37 are indicated.

Contents

Engine and Frame Assembly 4
Drive Assembly 6
Deck Assembly 8
Handle Assembly 10
Electrical Assembly 12
Fuel System Assembly 14
Air Intake and Filtration Assembly 16
Ignition and Electrical Assembly 18
Crankcase Assembly 20
Governor Control Assembly 22
Piston and Cylinder Head Assembly 24
Blower Housing Assembly 26
Gasket and Seal Kit Assembly 28
Attachments and Accessories 30

© 2017—The Toro® Company
8111 Lyndale Avenue South
Bloomington, MN 55420

Contact us at www.Toro.com.
Printed in the USA.
All Rights Reserved

Engine and Frame Assembly

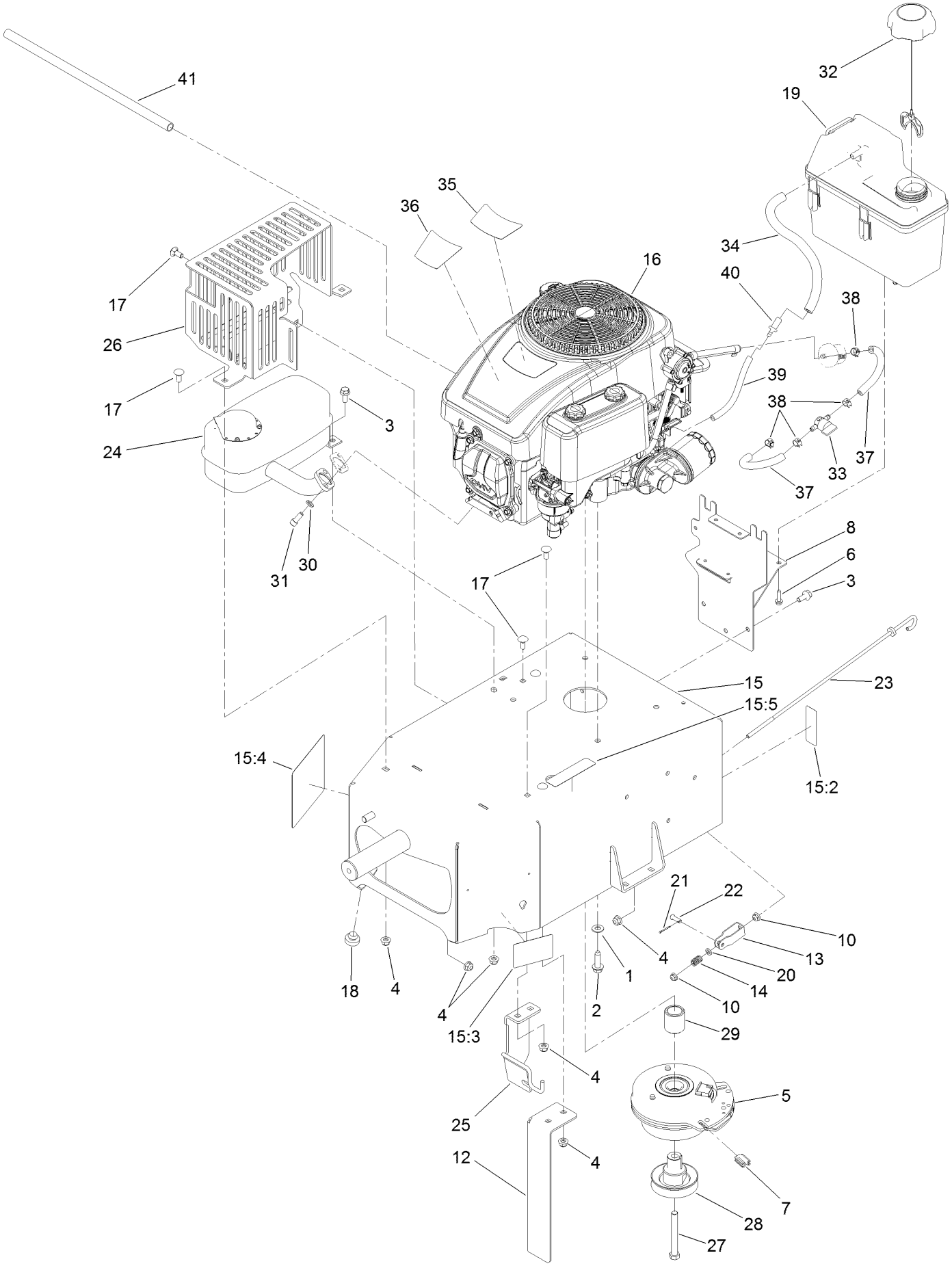

Engine and Frame Assembly (continued)

Ref.	Part Number	Qty.	Description
1	3256-24	4	Washer-Flat
2	32144-109	4	Screw-Taptite
3	3234-47	4	Screw-HHF
4	104-8300	12	Nut-Flange, NI
5	136-1425	1	Clutch-Electric
6	46-8091	2	Screw-HWH
7	120-2217	1	Isolator-Clutch
8	136-1411-01	1	Bracket-Tank
10	104-7201	2	Nut-Flange, NI
12	132-4060-01	1	Bracket-Torque
13	39-3080	1	Clevis
14	63-4220	1	Spring-Compression
15	136-4626	1	Frame ASM
15:2	115-9625	1	Decal-Brake, Parking
15:3	136-4646	1	Decal-Bypass
15:4	136-4635	1	Decal-Service
15:5	117-2718	1	Decal-Arrester, Spark
16	121-0412	1	Engine-1P92F-1
17	3230-1	8	Bolt-CARR
18	104-1412	2	Bumper-Rubber
19	114-0280	1	Tank-Fuel
20	55-9620	1	Spacer-Plate, Pivot
21	3272-4	1	Pin-Cotter
22	1-808265	1	Pin-Clevis
23	136-1412	1	Rod-Brake
24	136-1423	1	Muffler
25	133-9711-01	1	Guide-Belt/Cable
26	136-1429-03	1	Guard-Muffler
27	3212-14	1	Screw-HH
28	136-1424	1	Pulley-Hydro
29	136-1415	1	Spacer-Clutch
30	3253-4	2	Washer-Lock
31	3274-10	2	Screw-HSH
32	115-7788	1	Cap-Fuel
33	1-603770	1	Valve-Fuel
34	136-1436	1	Hose-Vent
35	125-1700	1	Decal-Engine
36	130-0682	1	Decal-Engine Displacement
37	109-0660	2	Hose-Fuel
38	2412-98	4	Clamp-Hose
39	136-1437	1	Hose-Vent
40	116-4630	1	Fitting-Orifice, Straight
41	106-7022	1	Tube-Drain, Oil

Drive Assembly

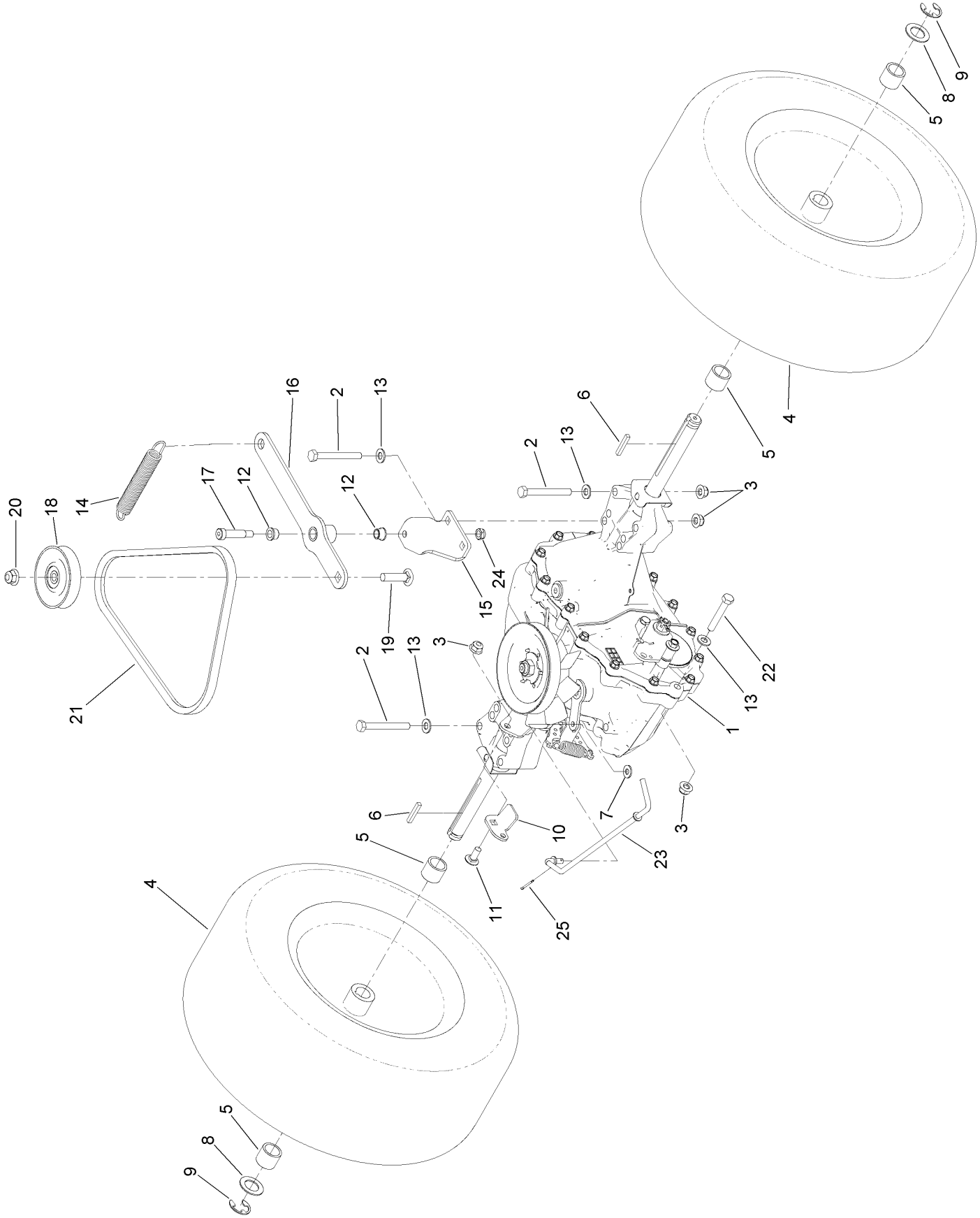

Drive Assembly (continued)

Ref.	Part Number	Qty.	Description
1	121-1908	1	Transaxle ASM
2	322-13	6	Screw-HH
3	104-8300	8	Nut-Flange, NI
4	132-7001	2	Tire ASM
5	132-4062	4	Spacer
6	92-0049	2	Key-Square
7	3256-22	1	Washer-Flat
8	67-9410	2	Washer
9	32151-48	2	E-Ring
10	132-7048-03	1	Bracket-Cable
11	3230-23	1	Screw-CARR
12	132-4097	2	Bushing
13	3256-23	7	Washer-Flat
14	21-1830	1	Spring-Extension
15	132-4079-03	1	Mount-Arm, Tension
16	132-4061-03	1	Arm-Tension, Belt
17	114-0239	1	Screw-HSH
18	62-4530	1	Pulley
19	3231-26	1	Screw-CARR
20	104-8301	1	Nut-Flange, NI
21	707081	1	V-Belt
22	322-10	1	Screw-HH
23	133-9715	1	Lever-Valve, Tow
24	3296-47	1	Nut-Lock, NI
25	3272-4	1	Pin-Cotter

Deck Assembly

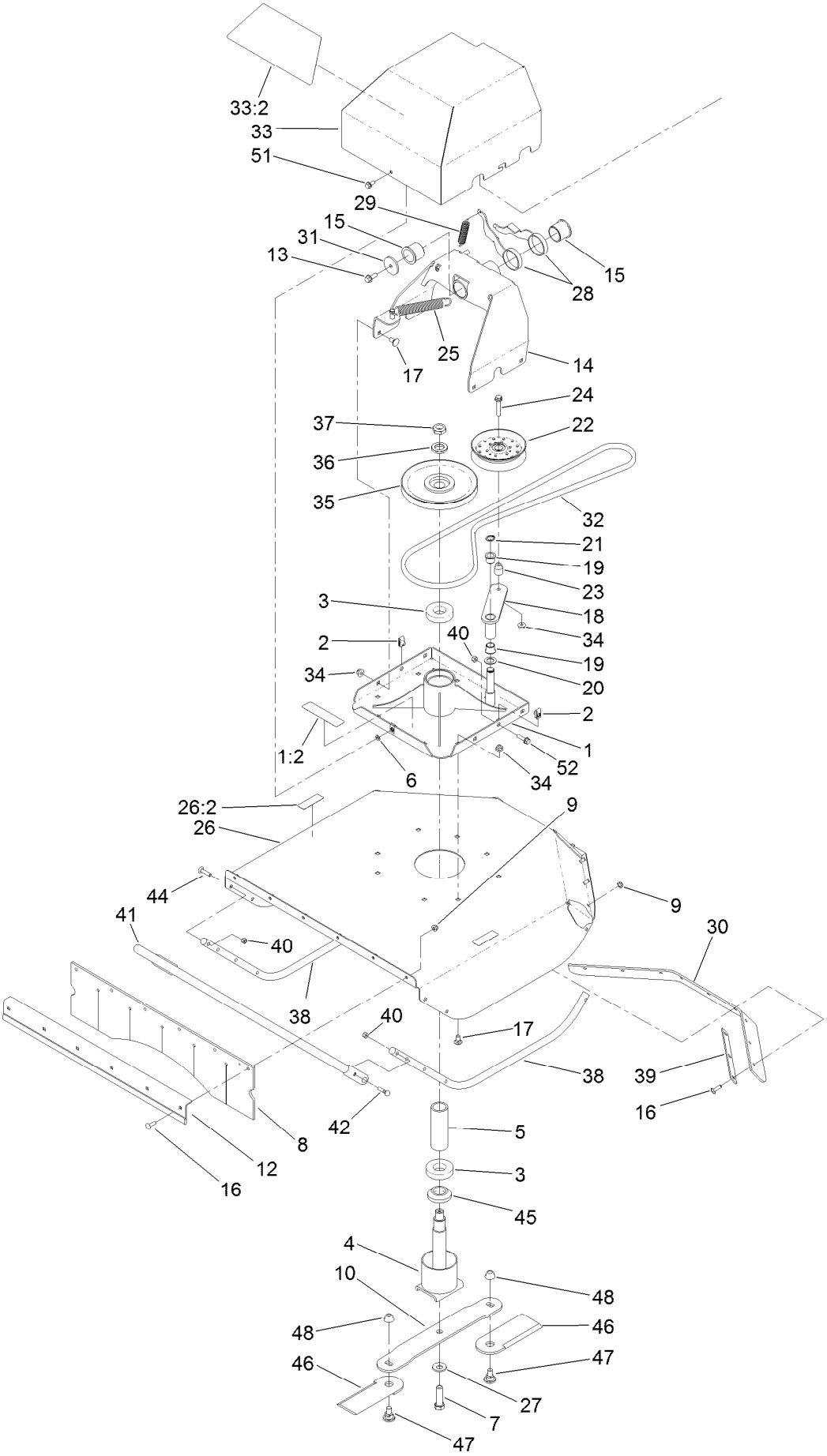

Deck Assembly (continued)

Ref.	Part Number	Qty.	Description
1	136-4637	1	Spindle ASM
1:2	93-7814	1	Decal-Danger
2	94-2413	3	Nut-U
3	132-4088	2	Bearing-Spindle
4	132-7040	1	Spindle Cup ASM
5	132-7006	1	Spacer-Bearing
6	117-2749	1	Nut-Push
7	51-4060	1	Screw-Blade
8	136-4599	1	Flap-Rubber
9	104-8300	15	Nut-Flange, NI
10	132-4066	1	Blade-Flail
12	136-1421-01	1	Guard-Flap, Rubber
13	3234-11	1	Screw-HHF
14	132-7044-03	1	Frame-Pivot
15	132-4091	2	Bushing
16	3230-22	15	Screw-CARR
17	3231-1	12	Screw-CARR
18	132-7033-03	1	Arm-Tension
19	132-4089	2	Bushing
20	67-9410	1	Washer
21	32120-93	1	Ring-Retaining
22	116-4665	1	Pulley-Idler, Flat
23	1-633456	1	Bushing, Idler
24	108-3742	1	Screw-HHF
25	106-2177	1	Spring-Extension
26	136-4625	1	Deck ASM

Ref.	Part Number	Qty.	Description
26:2	130-9670	2	Decal-Warning, Blade
27	125-1736	1	Washer-Belleville
28	132-4064-03	2	Arm-Return
29	13-0480	1	Spring
30	133-9700	1	Flap-Deck
31	132-4055	1	Washer-Flat
32	132-7047	1	Belt-Deck
33	136-4627	1	Guard-Belt
33:2	132-4011	1	Decal
34	104-8301	13	Nut-Flange, NI
35	104-3546	1	Pulley-Driven, Low
36	120-5576	1	Washer-Hardened
37	3296-60	1	Nut-Lock, NI
38	132-7008-03	2	BAR-Skid
39	133-9709-03	3	Plate-Flap, Deck
40	3296-29	12	Nut-Lock, NI
41	132-7009-03	1	Guard-Brush
42	130-2356	4	Screw-Handle, Lock
44	112-6950	6	Screw-CARR
45	136-4609	1	Cap-Spindle
46	132-4067	2	End-Blade
47	132-4069	2	Bolt
48	131-0703	2	Nut-HHF
51	3234-5	1	Screw-HHF
52	3234-36	2	Screw-HHF

Handle Assembly

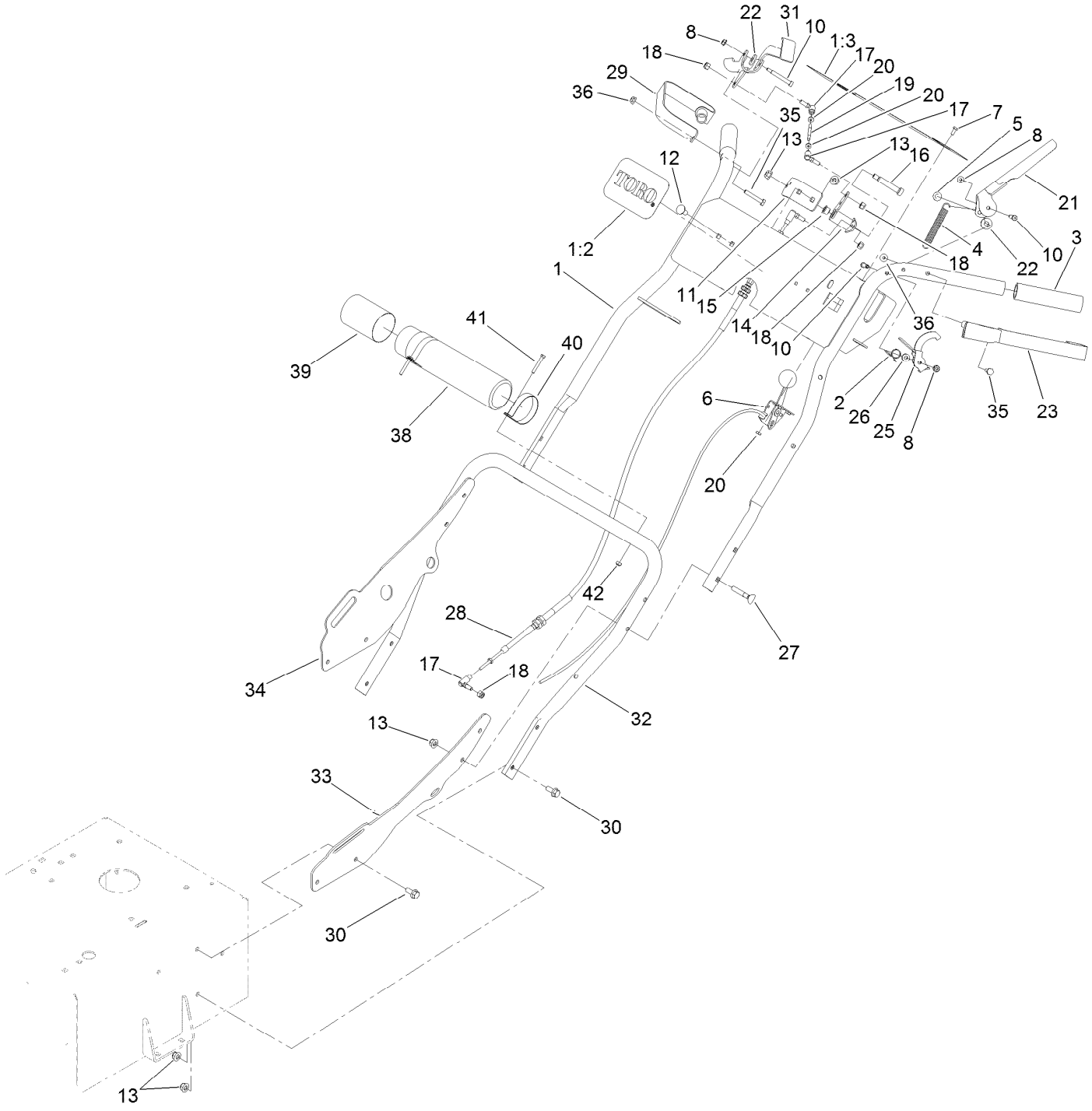

Handle Assembly (continued)

Ref.	Part Number	Qty.	Description
1	136-4624	1	Handle ASM
1:2	105-8278	1	Decal
1:3	132-4005	1	Decal-Operation, Safety
2	132-4085	1	Spring
3	136-1433	2	Grip-Foam
4	95-3805	1	Spring
5	32112-11	1	Nut-Push
6	136-1442	1	Cable-Throttle
7	25-8640	2	Screw-HH
8	32128-17	3	Nut-Lock, Flange
10	137-0550	3	Bolt-Shoulder
11	132-7023-03	1	Mount-Bell Crank
12	3230-1	2	Bolt-CARR
13	104-8300	15	Nut-Flange, NI
14	132-7024-03	1	Bell Crank ASM
15	132-4097	1	Bushing
16	126-0277	1	Screw-Shoulder
17	100-8559	4	Ball Joint ASM
18	3296-3	4	Nut-Lock
19	132-4083	1	Link-Control
20	3219-14	4	Nut-Hex

Ref.	Part Number	Qty.	Description
21	132-7029-03	1	Handle-Clutch
22	88-7200	2	Washer-Flat
23	136-4633-03	1	Guard-Knuckle
25	136-4596	1	Lockout
26	136-4595	1	Spacer
27	92-2260	4	Screw-Handle
28	132-4095	1	Cable-Traction
29	136-1430-03	1	Guard- Knuckle
30	3234-47	8	Screw-HHF
31	132-4049-03	1	Handle-Traction
32	133-9714-03	1	Handle-Lower
33	133-9716-03	1	Brace-Handle, LH
34	133-9717-03	1	Brace-Handle, RH
35	321-9	2	Screw-HH
36	104-7201	2	Nut-Flange, NI
38	104-7050	1	Tube-Manual
39	104-7048	1	Cap-Housing
40	2412-120	2	Clamp-R
41	32105-1	2	Screw-SHH
42	3296-2	2	Nut-Lock, NI

Electrical Assembly

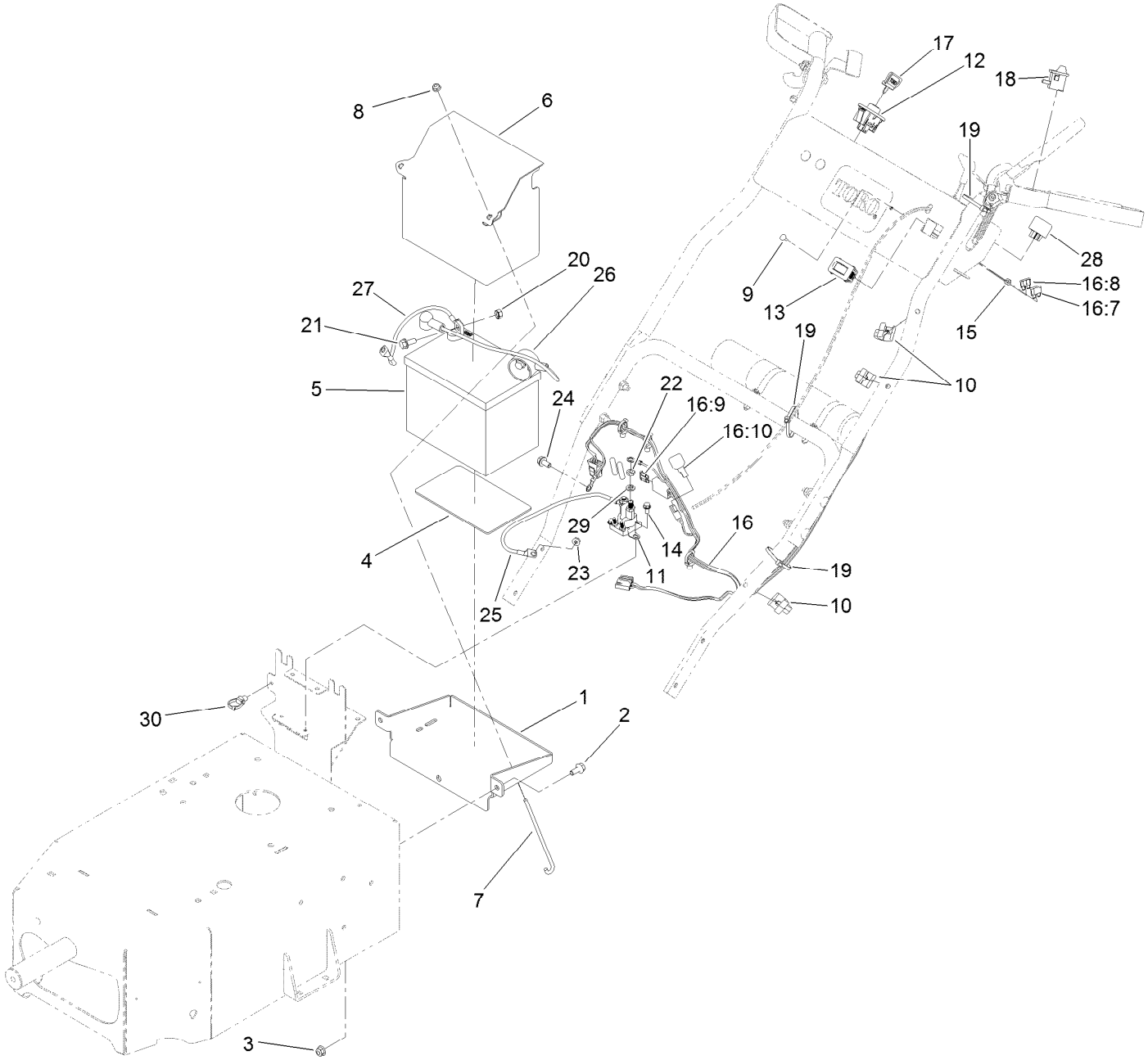

Electrical Assembly (continued)

Ref.	Part Number	Qty.	Description
1	136-1401-01	1	Tray-Battery
2	3234-47	3	Screw-HHF
3	104-8300	3	Nut-Flange, NI
4	62-4300	1	Pad-Skid, Anti
5	105-1692	1	Battery
6	136-1408-01	1	Tray-Battery
7	1-633651	2	Bolt-Holddown
8	104-7201	2	Nut-Flange, NI
9	1-807513	2	Bolt-CARR
10	114-7988	3	Guide-Cable
11	117-1197	1	Solenoid
12	117-2221	1	Switch-Ignition
13	120-2244	1	Hourmeter
14	32144-4	2	Screw-HWH
15	3296-2	2	Nut-Lock, NI
16	122-0925	1	Harness-Wire
16:7	218-578	1	Fuse-Blade, 10 Amp
16:8	109102	1	Fuse-Blade, 25 Amp
16:9	109103	1	Fuse-Blade, 30 Amp
16:10	100-4918	2	Diode
17	63-8360	1	Key-Ignition
18	133-4654	1	Switch-Plunger
19	614249	3	Tie-Cable
20	32149-1	2	Nut-Keps
21	3234-5	2	Screw-HHF
22	3220-2	2	Nut-Jam
23	33003-00	1	Nut-HF
24	3234-14	1	Screw-HHF
25	122-1000	1	Cable-Battery, Positive
26	122-0999	1	Cable-Battery, Positive
27	122-0959	1	Cable-Battery, Negative
28	98-7249	3	Relay
29	3253-4	2	Washer-Lock
30	32180-030	1	Clip-Tie

Fuel System Assembly

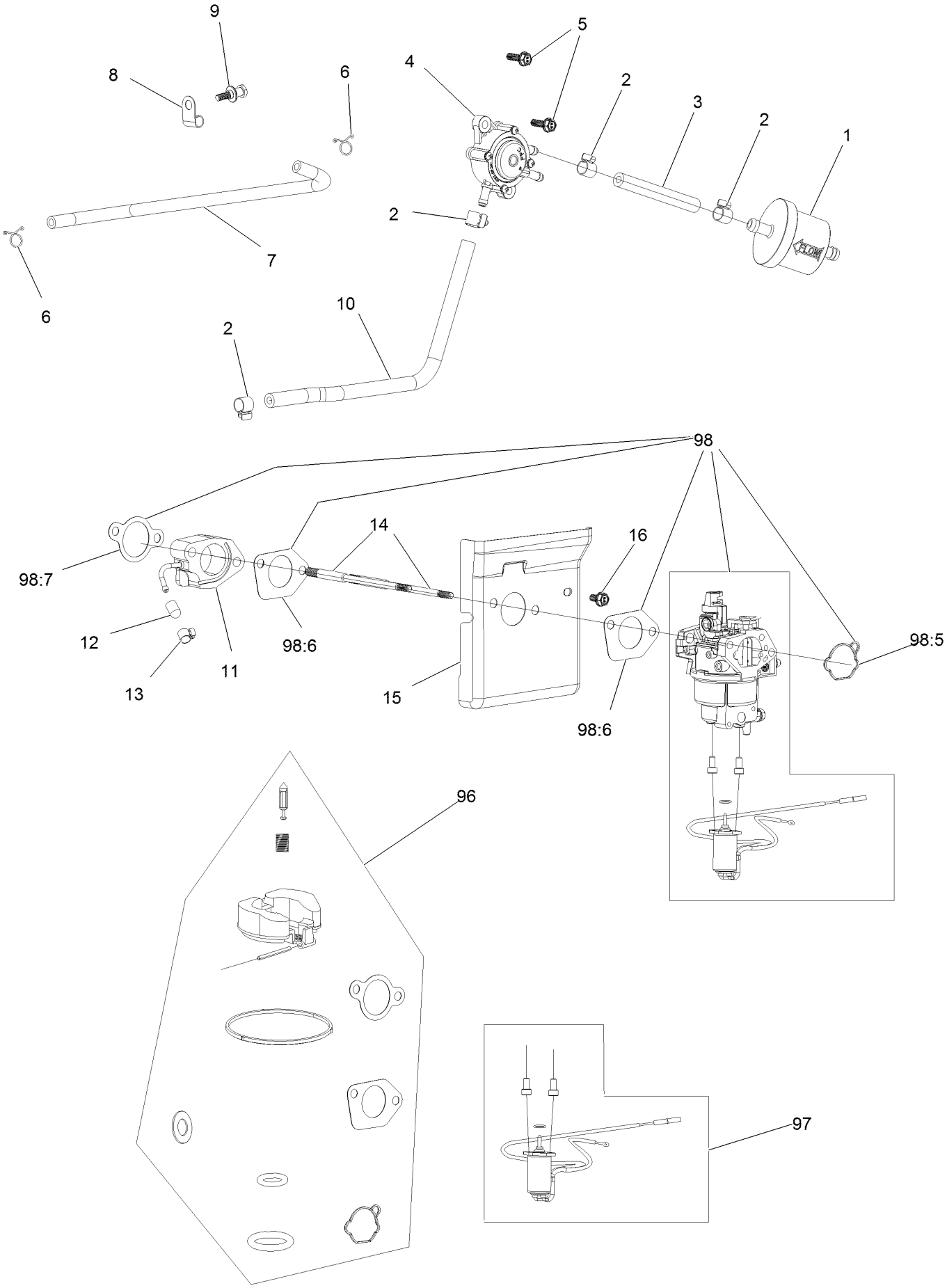

Fuel System Assembly (continued)

Ref.	Part Number	Qty.	Description
1	133-1563	1	Filter-Fuel
2	120-4251	4	Clamp-Fuel Line
3	120-4371	1	Line-Fuel
4	120-4353	1	Pump-Pulse, Fuel
5	120-4232	2	Screw-HHF
6	121-0114	2	Clamp-Hose
7	120-4372	1	Line-Pulse
8	120-4287	1	Clamp-J
9	120-4217	1	Screw-Shoulder, HH
10	120-4370	1	Line-Fuel
11	127-9181	1	Insulator-Carburetor
12	127-9189	1	Cap-Seal
13	127-9187	1	Clamp-Hose
14	120-4202	2	Stud-Mount, Carburetor
15	127-9182	1	Shroud
16	120-4216	1	Screw-HHF
96	127-9194	1	Carb Repair Kit With Gaskets
97	127-9190	1	Solenoid Kit
98	127-9183	1	Carburetor Kit
98:5	127-9185	1	Gasket-Carburetor
98:6	120-4247	2	Gasket-Carburetor
98:7	120-4250	1	Gasket-Carburetor
99	133-9929	1	High Altitude Kit ●

● Not illustrated

Air Intake and Filtration Assembly

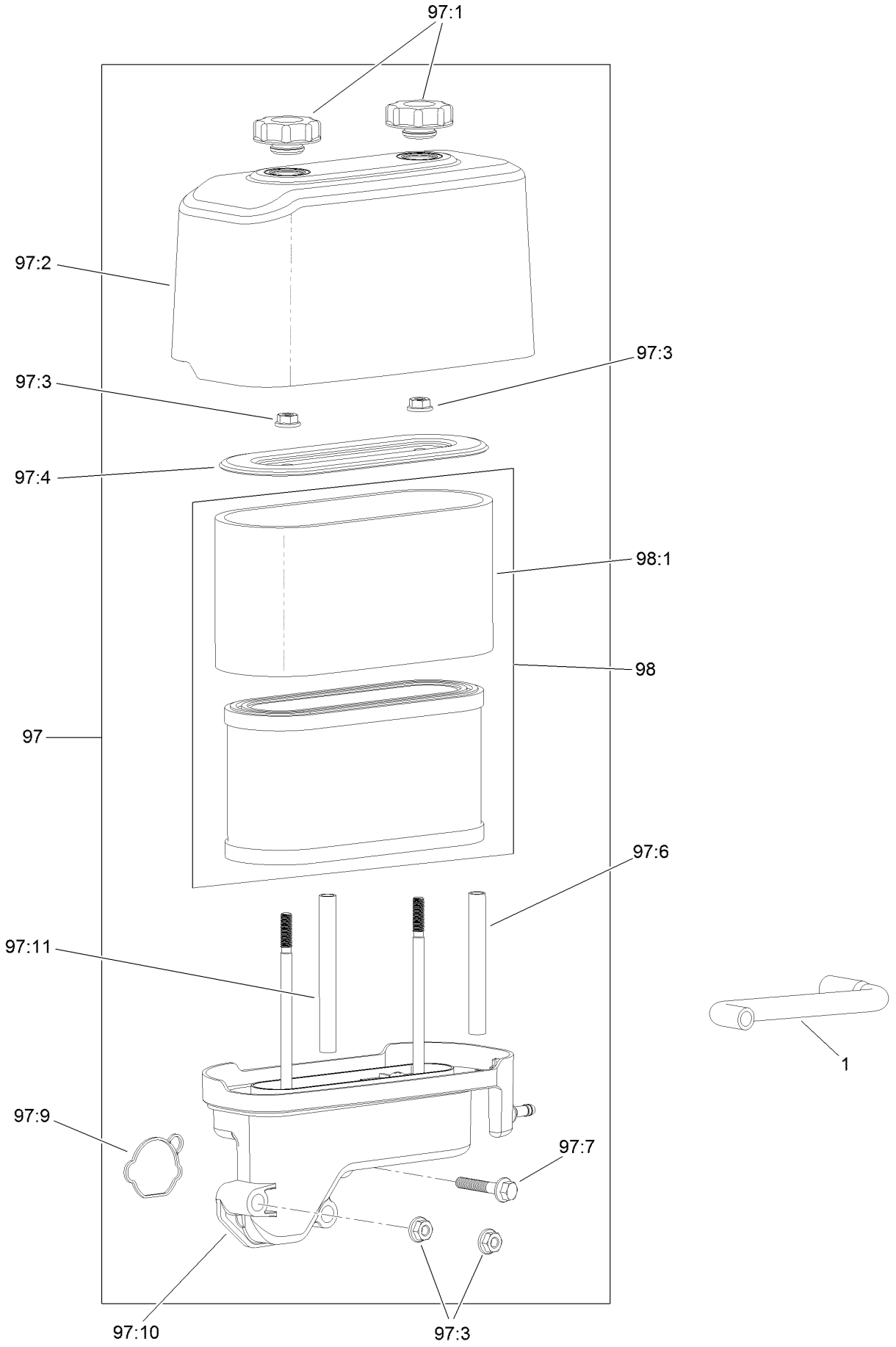

Air Intake and Filtration Assembly (continued)

Ref.	Part Number	Qty.	Description
1	120-4255	1	Tube-Breather
97	127-9186	1	Air Cleaner Kit
97:1	120-4312	2	Nut-Speed
97:2	120-4311	1	Cover-Filter, Air
97:3	120-4236	4	Nut-Flange
97:4	120-4310	1	Retainer-Air Filter
97:6	120-4333	1	Spacer-Filter, Air
97:7	120-4284	1	Screw-HHF
97:9	127-9185	1	Gasket-Carburetor
97:10	127-9191	1	Base-Filter, Air
97:11	120-4334	1	Spacer-Filter, Air
98	127-9193	1	Air Filter Kit
98:1	120-4309	1	Prefilter

Ignition and Electrical Assembly

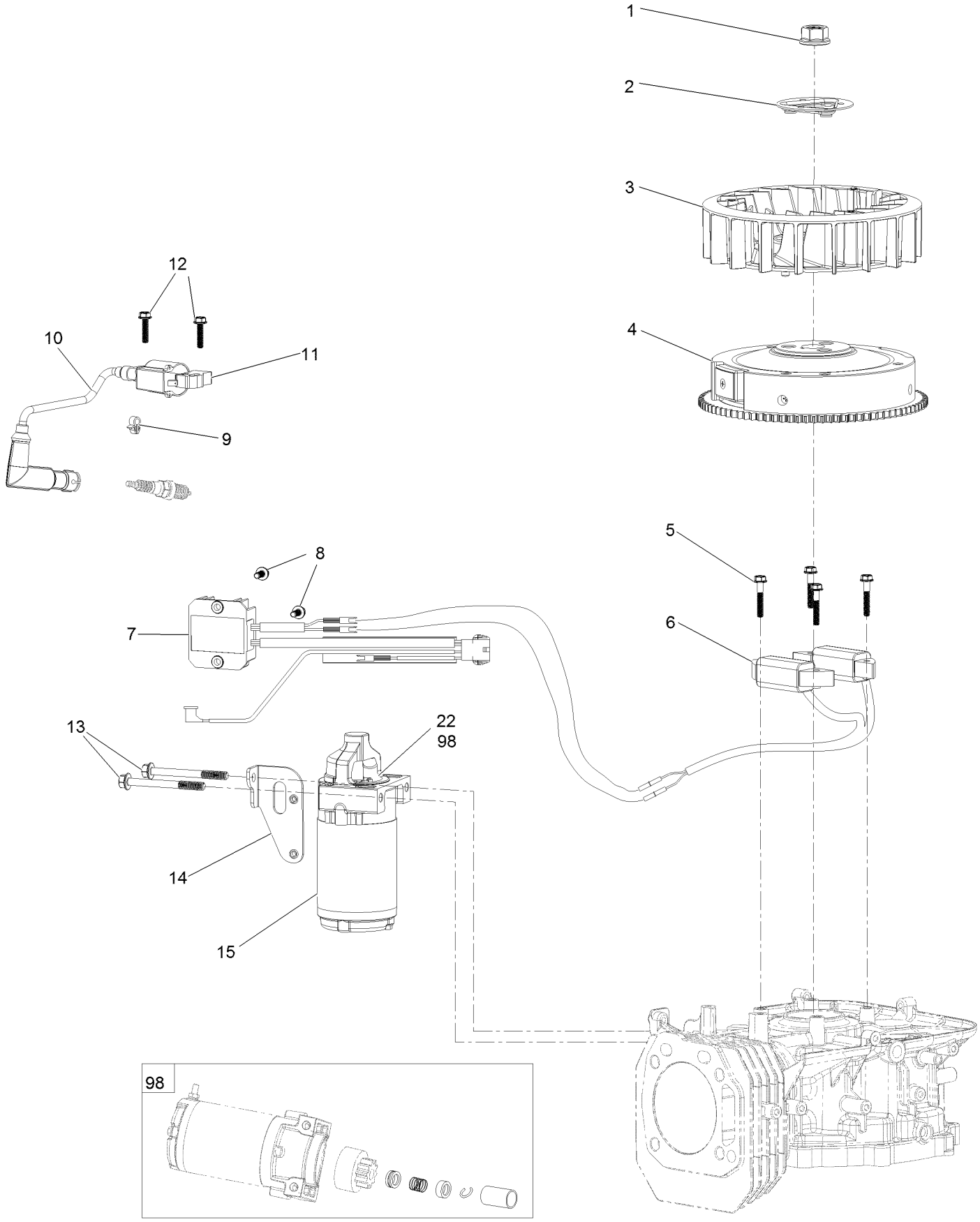

Ignition and Electrical Assembly (continued)

Ref.	Part Number	Qty.	Description
1	120-4213	1	Nut-Flange
2	120-4212	1	Pulley-Starter
3	120-4211	1	Fan-Cooling
4	120-4399	1	Flywheel
5	120-4223	4	Screw-HHF
6	127-9176	1	Alternator
7	127-9178	1	Voltage Regulator
8	120-4216	3	Screw-HHF
9	120-4316	1	Clamp-Wire
10	120-4226	1	Boot-Plug, Spark
11	127-9177	1	Ignition Coil ASM
12	120-4225	2	Screw-HHF
13	120-4231	2	Screw-HHF
14	120-4230	1	Bracket-Starter
15	133-9832	1	Motor-Starter
22	133-1562	1	Pinion-Starter
98	120-4392	1	Starter Repair Kit

Crankcase Assembly

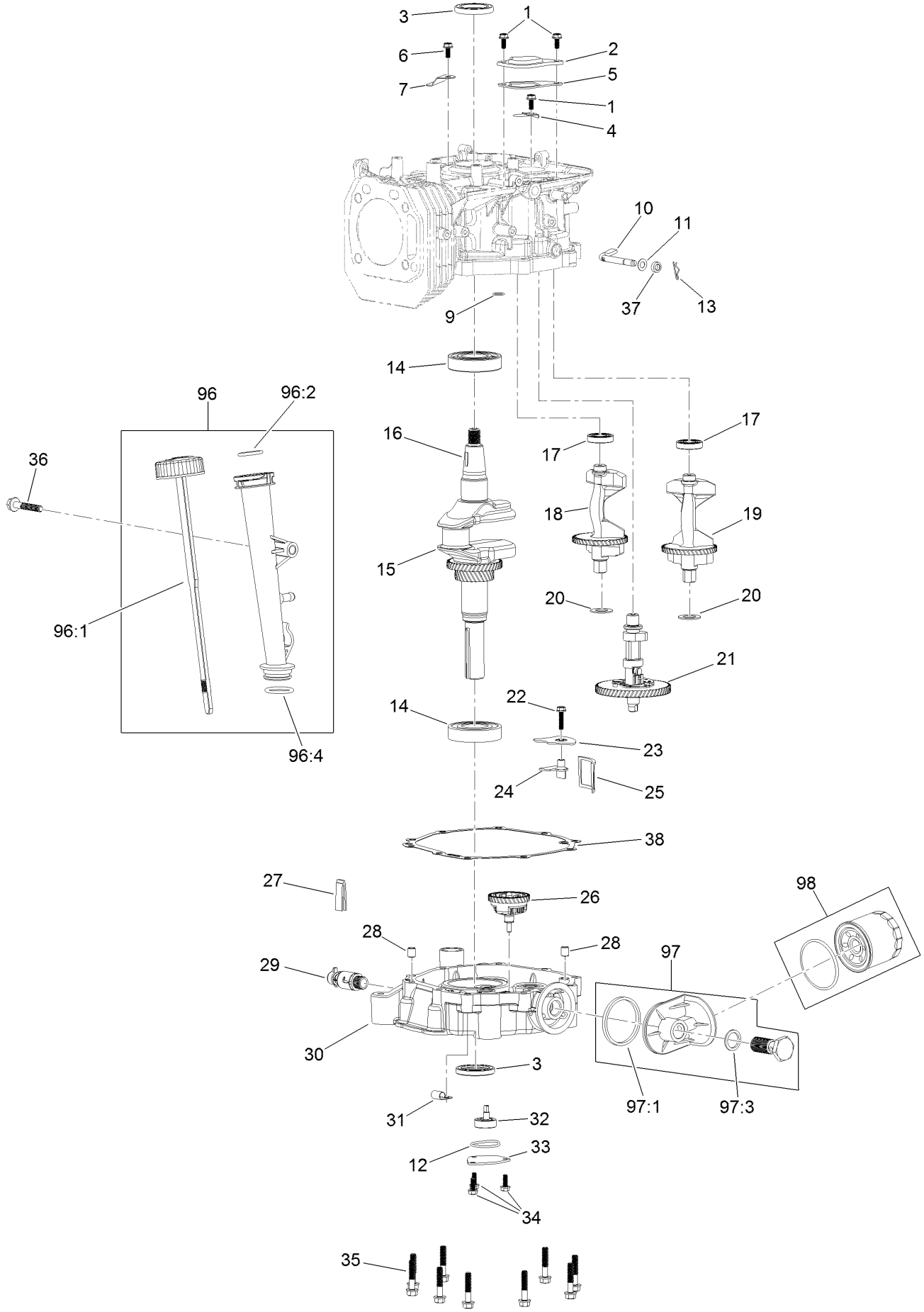

Crankcase Assembly (continued)

Ref.	Part Number	Qty.	Description
1	120-4216	3	Screw-HHF
2	120-4265	1	Plate-Breather
3	120-4267	2	Seal-Oil
4	120-4263	1	Valve-Reed
5	120-4264	1	Gasket-Breather
6	120-4234	1	Screw-HHF
7	120-4268	1	Retainer
9	120-4262	1	O-Ring
10	120-4382	1	Shaft-Governor
11	120-4258	1	Washer-Plain
12	120-4343	1	Seal-Pump, Oil
13	120-4256	1	Pin-Hair
14	120-4261	2	Bearing-Ball
15	120-4293	1	Crankshaft
16	120-4320	1	Key-Woodruff
17	120-4266	2	Bearing-Ball
18	127-9179	1	Shaft-Balance, R
19	127-9180	1	Shaft-Balance, L
20	120-4295	2	Washer
21	120-4297	1	Camshaft
22	120-4225	1	Screw-HHF
23	120-4342	1	Cover-Strainer, Oil
24	120-4279	1	Plate-Baffle, Oil

Ref.	Part Number	Qty.	Description
25	120-4341	1	Strainer-Oil
26	120-4338	1	Gear-Governor
27	120-4275	1	Deflector-Oil, Rubber
28	120-4274	2	Pin-Dowel
29	120-4321	1	Valve-Drain, Oil
30	120-4327	1	Cover-Crankcase
31	127-9188	1	Clamp-Hose
32	120-4344	1	Oil Pump ASM
33	120-4270	1	Cover-Pump, Oil
34	120-4232	3	Screw-HHF
35	120-4273	10	Screw-HHF
36	120-4284	1	Screw-HHF
37	120-4257	1	Seal-Oil
38	120-4260	1	Gasket-Crankcase
96	120-4355	1	Dipstick And Tube Kit
96:1	120-4350	1	Dipstick ASM
96:2	120-4348	1	O-Ring
96:4	120-4282	1	O-Ring
97	120-4363	1	Oil Adaptor Kit
97:1	120-4362	1	Seal-Adaptor, Oil
97:3	120-4360	1	Washer-Filter, Oil
98	120-4276	1	Filter-Oil

Governor Control Assembly

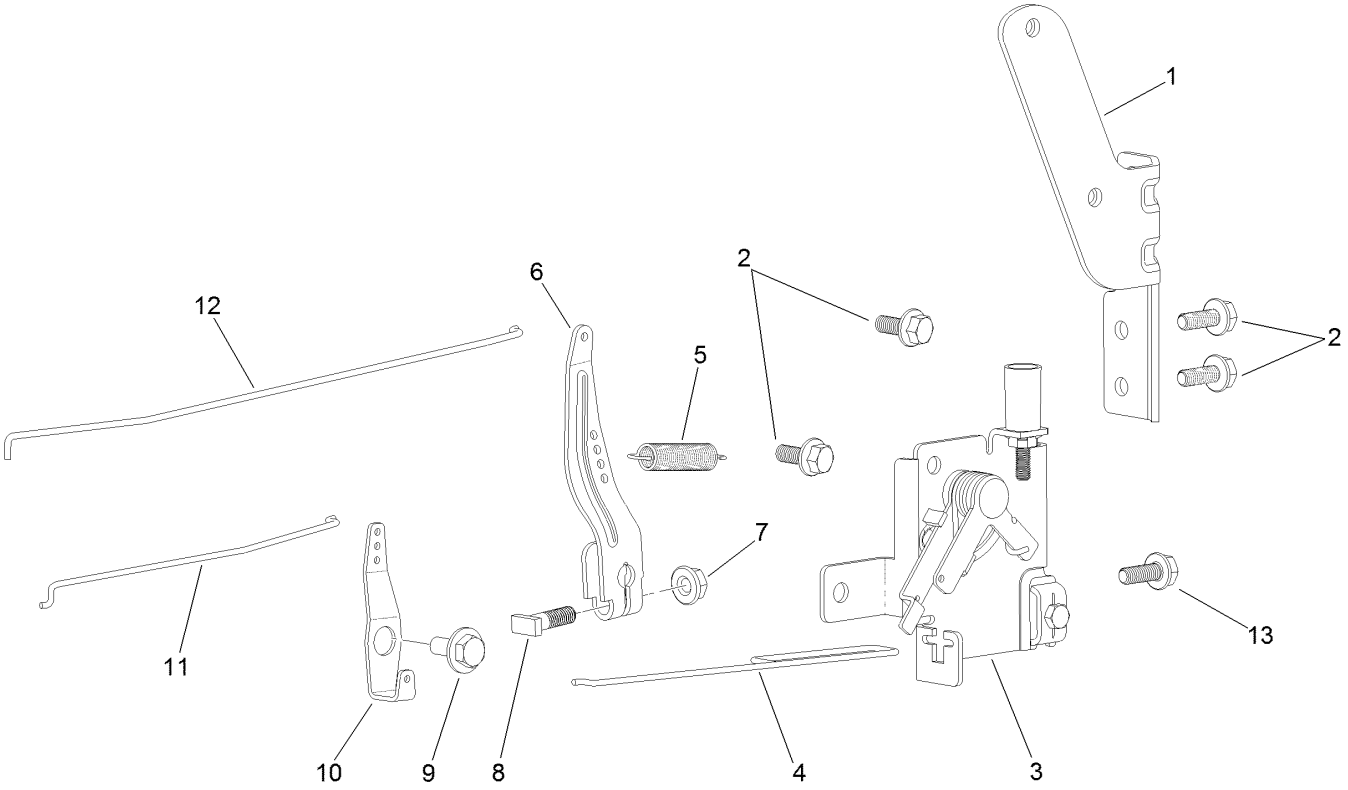

Governor Control Assembly (continued)

Ref.	Part Number	Qty.	Description
1	120-4357	1	Bracket-Pump, Fuel
2	120-4234	4	Screw-HHF
3	120-4358	1	Control-Throttle
4	120-4243	1	Rod-Throttle
5	120-4337	1	Spring-Governor
6	120-4352	1	Arm-Governor
7	120-4236	1	Nut-Flange
8	120-4238	1	Bolt-Arm, Governor
9	120-4241	1	Screw-Shoulder, HHF
10	120-4242	1	Bellcrank-Choke
11	120-4240	1	Rod-Choke
12	120-4239	1	Rod-Governor
13	120-4232	1	Screw-HHF

Piston and Cylinder Head Assembly

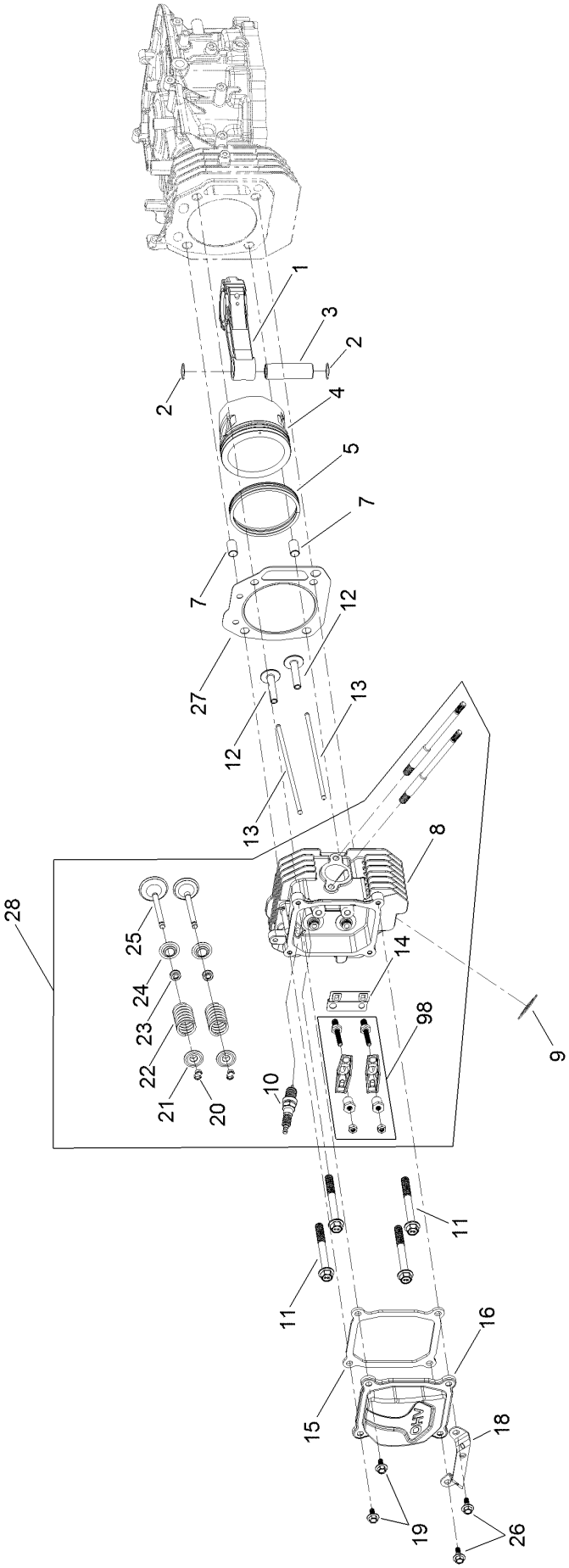

Piston and Cylinder Head Assembly (continued)

Ref.	Part Number	Qty.	Description
1	120-4292	1	Connecting Rod ASM
2	120-4288	2	Ring-Retaining, Piston Pin
3	120-4291	1	Pin-Piston
4	120-4290	1	Piston
5	120-4289	1	Ring Set
7	120-4200	2	Pin-Dowel
8	120-4203	1	Head-Cylinder
9	120-4317	1	Gasket-Exhaust
10	77-7330	1	Plug-Spark
11	120-4205	4	Screw-HHF
12	120-4298	2	Lifter-Valve
13	120-4340	2	Rod-Push
14	120-4300	1	Plate-Guide, Push Rod
15	120-4206	1	Gasket-Cover, Valve
16	120-4207	1	Cover-Valve
18	120-4345	1	Bracket-Muffler
19	120-4209	2	Screw-Shoulder, HHF
20	120-4307	4	Keeper-Valve
21	120-4306	2	Retainer-Spring, Valve
22	120-4305	2	Spring-Valve
23	120-4304	2	Seal-Stem, Valve
24	120-4303	2	Seat-Spring, Valve
25	120-4302	2	Valve Set
26	120-4210	2	Screw-Shoulder, HHF
27	120-4201	1	Gasket-Cyclinder
28	133-9845	1	Complete Head ASM
98	120-4301	1	Rocker Arm Kit

Blower Housing Assembly

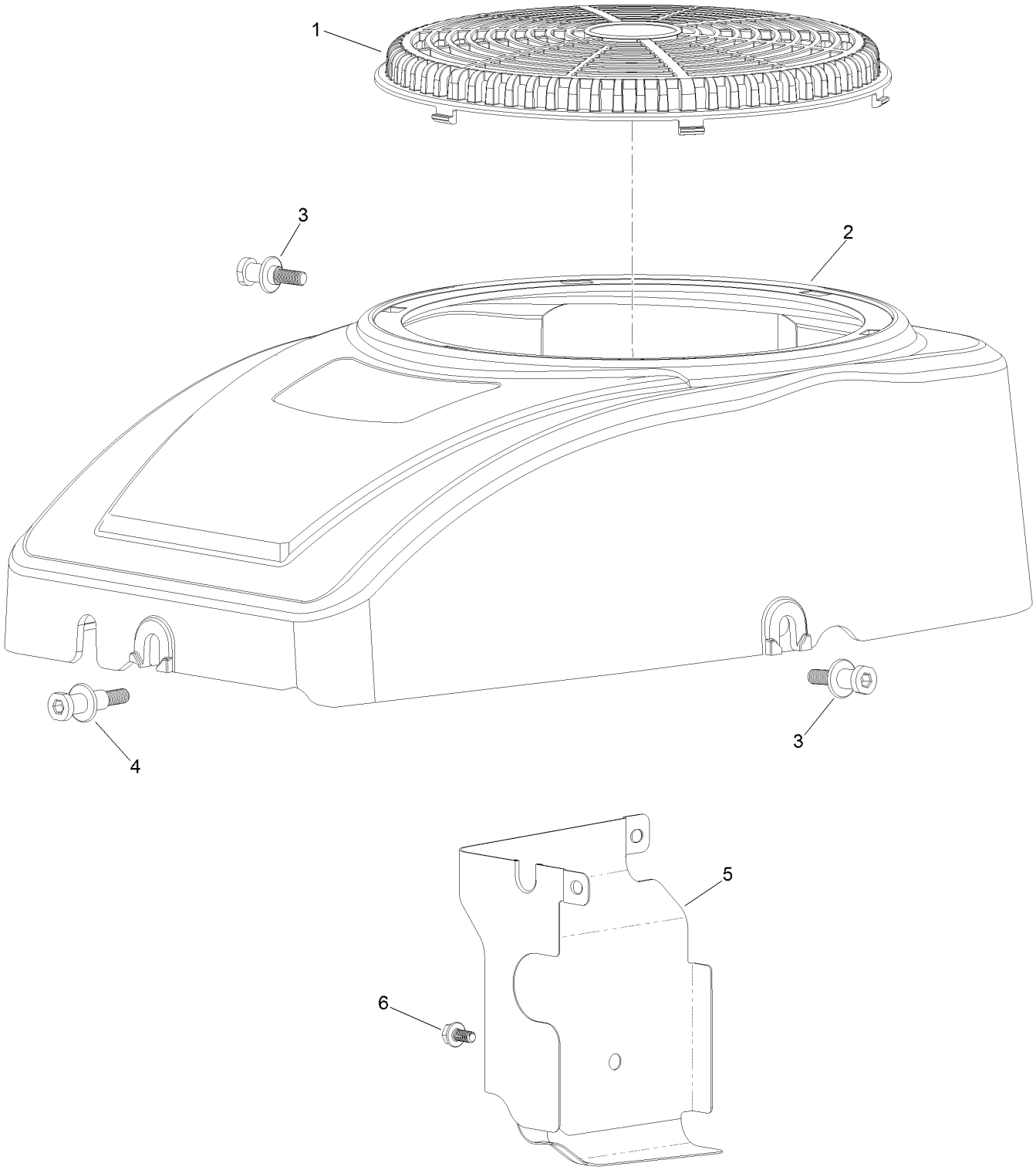

Blower Housing Assembly (continued)

Ref.	Part Number	Qty.	Description
1	120-4219	1	Screen-Stationary
2	120-4218	1	Shroud-Fan
3	120-4217	2	Screw-Shoulder, HH
4	120-4214	1	Screw-Shoulder, HH
5	120-4215	1	Shield
6	120-4216	1	Screw-HHF

Gasket and Seal Kit Assembly

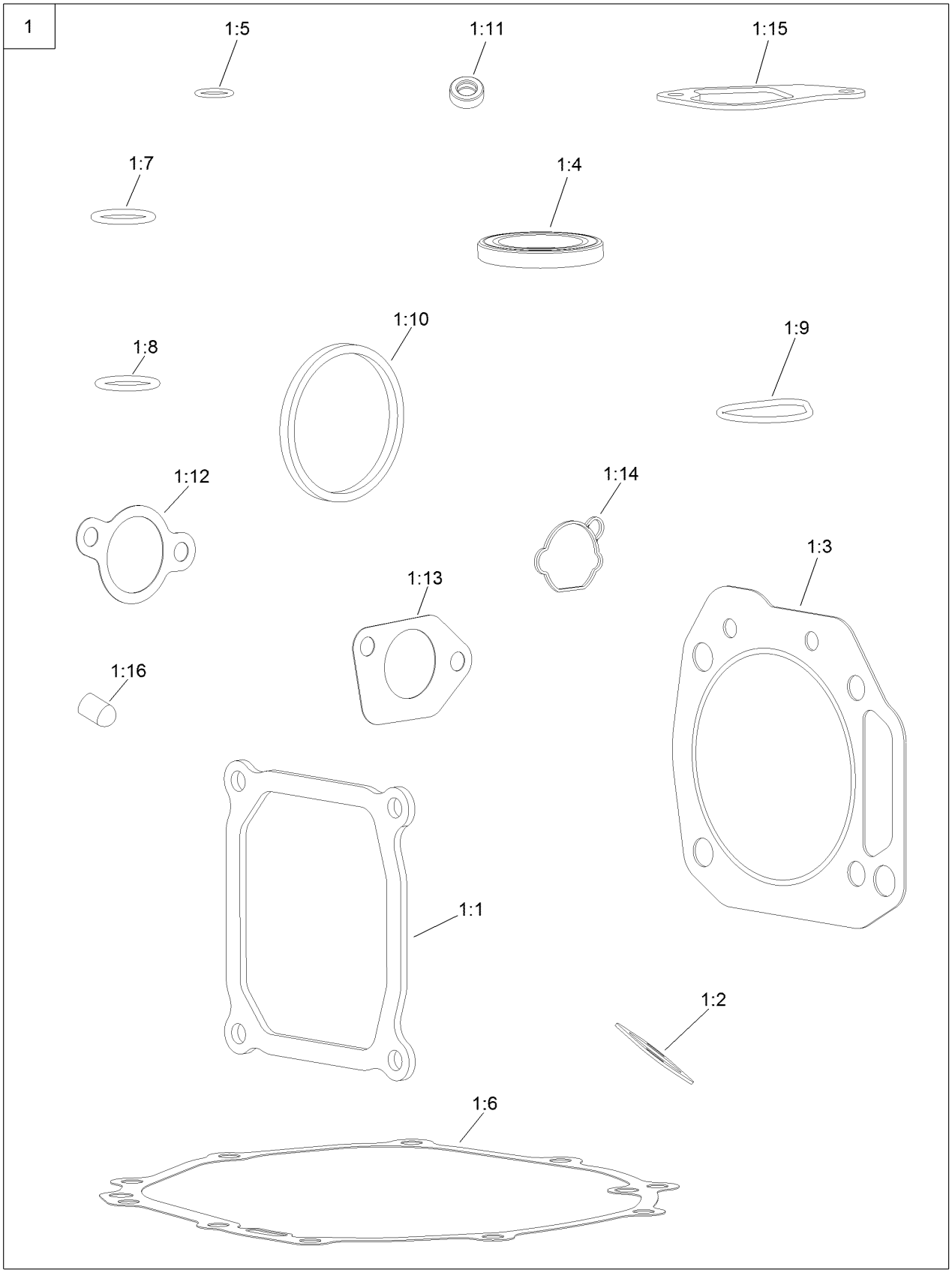

Gasket and Seal Kit Assembly (continued)

Ref.	Part Number	Qty.	Description
1	127-9192	1	Gasket And Seal Kit
1:1	120-4206	1	Gasket-Cover, Valve
1:2	120-4317	1	Gasket-Exhaust
1:3	120-4201	1	Gasket-Cyclinder
1:4	120-4267	2	Seal-Oil
1:5	120-4262	1	O-Ring
1:6	120-4260	1	Gasket-Crankcase
1:7	120-4348	1	O-Ring
1:8	120-4282	1	O-Ring
1:9	120-4343	1	Seal-Pump, Oil
1:10	120-4362	1	Seal-Adaptor, Oil
1:11	120-4257	1	Seal-Oil
1:12	120-4250	1	Gasket-Carburetor
1:13	120-4247	2	Gasket-Carburetor
1:14	127-9185	1	Gasket-Carburetor
1:15	120-4264	1	Gasket-Breather
1:16	127-9189	1	Cap-Seal

Attachments and Accessories

For 23522 Brush Cutter

Product Name	Model/Part
Spark Arrester Kit	131-4160
Blade-Brush	132-7036-03
Flail Blade Kit	136-4622
Flail Ends Kit	136-4623

Notes:

TORO®

Count on it.