Form No. 3406-728 Rev A

Power Clear® 721 R Snowthrower

Model No. 38741—Serial No. 400010798 and Up

Model No. 38742—Serial No. 400010798 and Up

Operator's Manual

Introduction

⚠ WARNING

CALIFORNIA
Proposition 65 Warning

This product contains a chemical or chemicals known to the State of California to cause cancer, birth defects, or reproductive harm.

The engine exhaust from this product contains chemicals known to the State of California to cause cancer, birth defects, or other reproductive harm.

This machine is intended to be used by residential homeowners or professional, hired operators. It is designed primarily for removing snow from paved surfaces, such as driveways and sidewalks, and other surfaces for traffic on residential or commercial properties. It is not designed for removing materials other than snow, nor is it designed for clearing off gravel surfaces.

Read this information carefully to learn how to operate and maintain your machine properly and to avoid injury and machine damage. You are responsible for operating the machine properly and safely.

You may contact Toro directly at www.Toro.com for machine and accessory information, help finding a dealer, or to register your machine.

Whenever you need service, genuine Toro parts, or additional information, contact an Authorized Service Dealer or Toro Customer Service and have the model and serial numbers of your machine ready. Figure 1 identifies the location of the model and serial numbers on the machine. Write the numbers in the space provided.

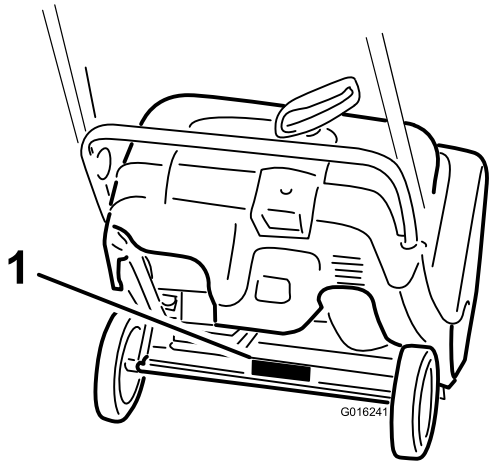

Figure 1

1. Model and serial number location

Model No. _____

Serial No. _____

This manual identifies potential hazards and has safety messages identified by the safety-alert symbol (Figure 2), which signals a hazard that may cause serious injury or death if you do not follow the recommended precautions.



Figure 2

1. Safety-alert symbol

This manual uses 2 words to highlight information. **Important** calls attention to special mechanical information and **Note** emphasizes general information worthy of special attention.

Important: If you are using this machine above 1500 m (5,000 ft) for a continuous period, ensure that the High Altitude Kit has been installed so that the engine meets CARB/EPA emission regulations. The High Altitude Kit increases engine performance while preventing spark-plug fouling, hard starting, and increased emissions. Once you have installed the kit, attach the high-altitude label next to the serial decal on the machine. Contact any Authorized Toro Service Dealer

© 2016—The Toro® Company
8111 Lyndale Avenue South
Bloomington, MN 55420

Register at www.Toro.com.

Original Instructions (EN)
Printed in the USA
All Rights Reserved

3406-728 A

to obtain the proper High Altitude Kit and high-altitude label for your machine. To locate a dealer convenient to you, access our website at www.Toro.com or contact our Toro Customer Care Department at the number(s) listed in your Emission Control Warranty Statement.

Remove the kit from the engine and restore the engine to its original factory configuration when running the engine under 1500 m (5,000 ft). Do not operate an engine that has been converted for high-altitude use at lower altitudes; otherwise, you could overheat and damage the engine.

If you are unsure whether or not your machine has been converted for high-altitude use, look for the following label (Figure 3).



Figure 3

Contents

Introduction 1
Safety 2
Safety and Instructional Decals 3
Setup 4
1 Unfolding the Handle 4
2 Installing the Discharge Chute 4
3 Filling the Engine with Oil 5
4 Adjusting the Control Cable 6
Product Overview 6
Operation 6
Before Operation 6
Safety 6
Filling the Fuel Tank 7
Checking the Engine-Oil Level 7
During Operation 7
Starting the Engine 7
Engaging the Rotor Blades 9
Disengaging the Rotor Blades 9
Shutting Off the Engine 9
Adjusting the Discharge Chute 9
Clearing a Clogged Discharge Chute 9
Operating Tips 10
After Operation 10
Safety 10
Preventing Freeze-up after Use 10
Maintenance 11
Recommended Maintenance Schedule(s) 11
Maintenance Safety 11
Adjusting the Control Cable 11
Inspecting the Rotor Blades 12
Changing the Engine Oil 13
Servicing the Spark Plug 14
Replacing the Drive Belt 15
Storage 16
Storing the Snowthrower 16

Safety

- Read and understand the contents of this *Operator's Manual* before you start the engine. Ensure that everyone using this product knows how to use it and understands the warnings.
- Do not put your hands or feet near moving components on the machine.
- Do not operate the machine without all guards and other safety protective devices in place and working on the machine.
- Keep clear of any discharge opening. Keep bystanders a safe distance away from the machine.
- Keep children out of the operating area. Never allow children to operate the machine.
- Shut off the engine before unclogging, servicing, or fueling the machine.

Safety and Instructional Decals

Important: **Safety and instruction decals are located near areas of potential danger. Replace damaged decals.**

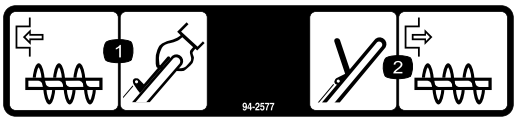

94-2577

1. To engage the rotor blades, hold the control bar against the handle.
2. To disengage the rotor blades, release the control bar.

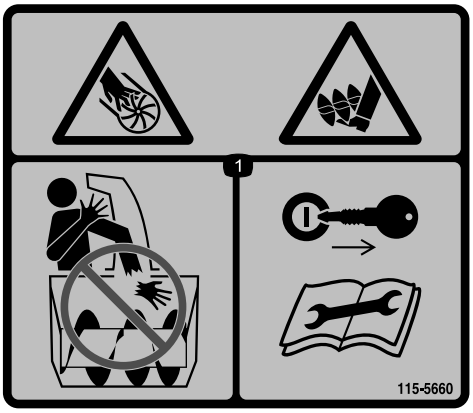

115-5660

1. Cutting dismemberment hazards, impeller and auger—do not place your hand in the chute; remove the ignition key and read the instructions before servicing or performing maintenance.

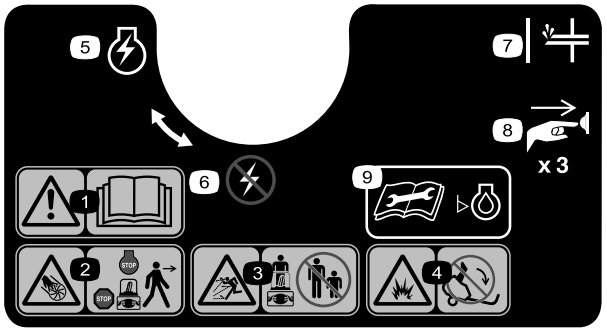

117-9102 (Model 38741 only)

Order Part No. 117-6036

1. Warning—read the *Operator's Manual.*
2. Cutting/dismemberment hazard, impeller—shut off the engine before leaving the machine.
3. Thrown object hazard—keep bystanders a safe distance away from the machine.
4. Fuel spill hazard—do not tip machine backward.
5. Engine switch on
6. Engine switch off
7. Primer
8. Push the primer 3 times to prime the engine.
9. Read the *Operator's Manual* before checking the engine-oil level.

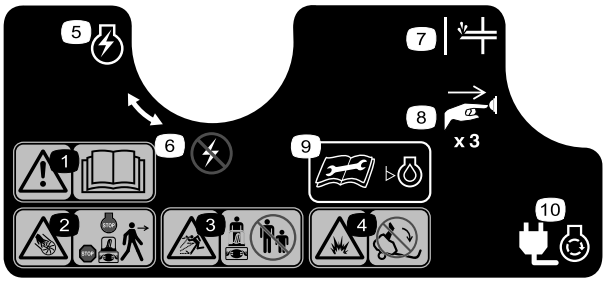

117-9103 (Model 38742 only)

Order Part No. 117-6046

1. Warning—read the *Operator's Manual.*
2. Cutting/dismemberment hazard, impeller—shut off the engine before leaving the machine.
3. Thrown object hazard—keep bystanders a safe distance away from the machine.
4. Fuel spill hazard—do not tip machine backward.
5. Engine switch on
6. Engine switch off
7. Primer
8. Push the primer 3 times to prime the engine.
9. Read the *Operator's Manual* before checking the engine-oil level.
10. Plug the machine in to power the electric starter.

Setup

Loose Parts

Use the chart below to verify that all parts have been shipped.

Procedure	Description	Qty.	Use
1	No parts required	–	Unfold the handle.
2	Discharge chute Chute handle Phillips-head bolt Washer Locknut	1 1 3 3 3	Install the discharge chute.

1

Unfolding the Handle

No Parts Required

Procedure

1. Loosen the handle knobs, pull out the U-shaped handle locks until you can move the handle freely, and rotate the handle to the operating position (Figure 4).

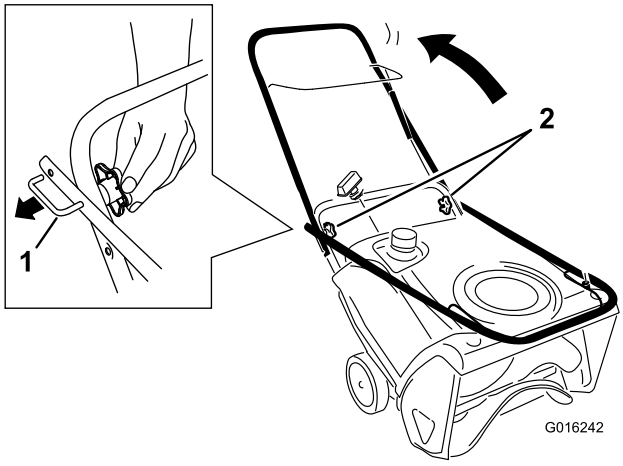

Figure 4

1. U-shaped handle lock (2) 2. Handle knobs

2. Insert the end of the U-shaped handle lock into the open hole in the handle and tighten the handle knobs until they are snug (Figure 5).

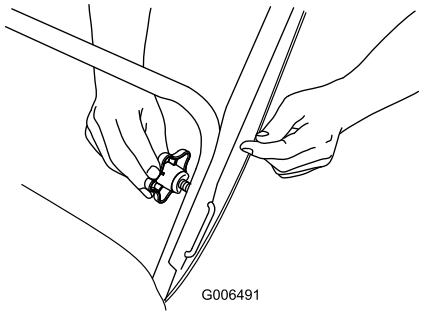

Figure 5

Important: Ensure that you do not pinch or kink the control cable (Figure 6).

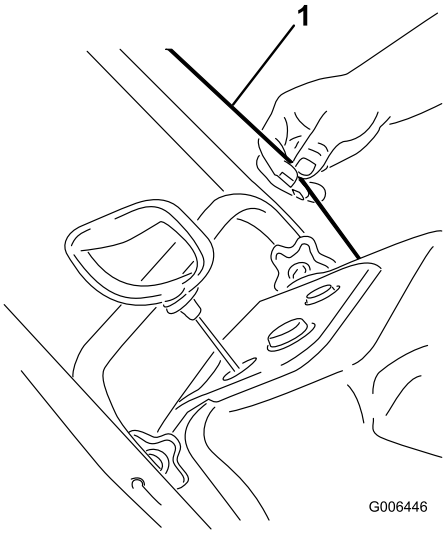

Figure 6

1. Control cable

2

Installing the Discharge Chute

Parts needed for this procedure:

1	Discharge chute
1	Chute handle
3	Phillips-head bolt
3	Washer
3	Locknut

Procedure

Install the discharge chute as shown (Figure 7).

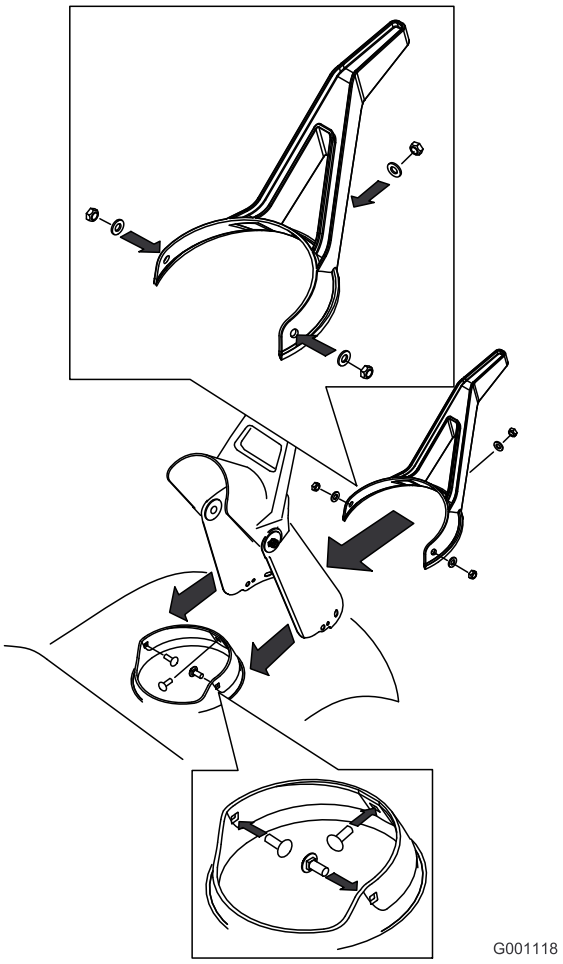

Figure 7

3

Filling the Engine with Oil

No Parts Required

Procedure

Your machine does not come with oil in the engine, but it does come with a bottle of oil.

Important: Before starting the engine, fill the engine with oil.

Note: The bottle of oil may contain more oil than the engine requires. **Do not overfill or under fill the engine.**

Max fill: 0.60 L (20 oz), type: automotive detergent oil with an API service classification of SJ, SL, or higher.

Use Figure 8 below to select the best oil viscosity for the outdoor temperature range expected.

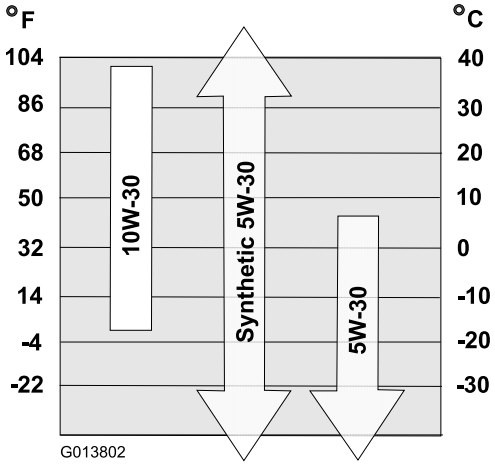

Figure 8

1. Move the machine to a level surface.
2. Clean around the oil-fill cap (Figure 9).

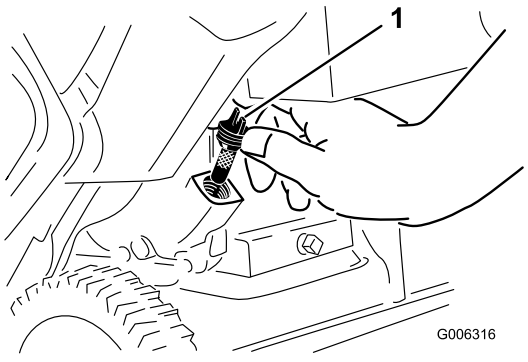

Figure 9

1. Oil-fill cap

3. Unscrew the oil-fill cap and remove it.
4. With the machine in the operating position, **carefully** pour oil into the crankcase. Wait 3 minutes for the oil to settle and add enough to bring it to the point of overflow. There should be very little, if any, oil left in the bottle.

   Note: You may tip the machine forward (handle up) to make adding oil easier. Remember to return the machine to the operating position before checking the oil level.

   Important: Do not tip the machine all the way forward onto its nose, or fuel may leak out of the machine.
5. Screw the oil-fill cap into the oil-fill hole and tighten it securely.

4

Adjusting the Control Cable

No Parts Required

Procedure

Refer to (page).

Product Overview

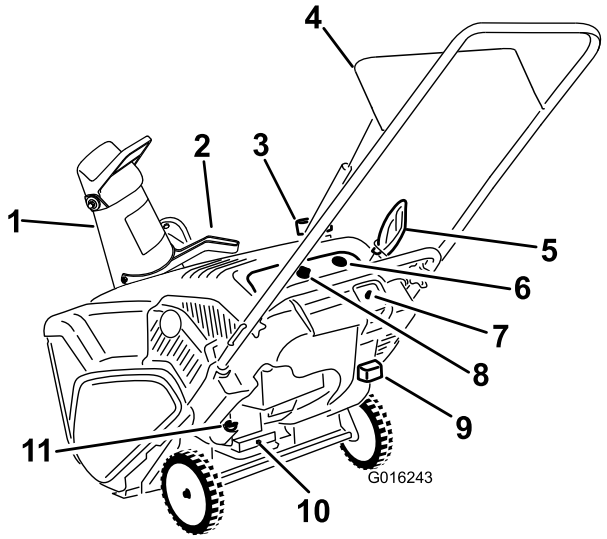

Figure 10

1. Discharge chute
2. Discharge-chute handle
3. Fuel-tank cap
4. Control bar
5. Recoil-start handle
6. Primer
7. Electric-start button (Model 38742 only)
8. Ignition key
9. Choke lever
10. Oil-drain plug
11. Oil-fill cap

Operation

Before Operation

Safety

- Use extension cords and receptacles as specified by the manufacturer for all machines with electric-starting motors.
- Do not operate the machine without wearing adequate winter garments. Avoid loose fitting clothing that can get caught in moving parts. Wear slip resistant footwear that will improve footing on slippery surfaces.
- Always eye protection during operation or while performing an adjustment or repair to protect your eyes from foreign objects that the machine may throw.
- Thoroughly inspect the area where you will use the machine and remove all doormats, sleds, boards, wires, and other foreign objects.
- If a shield, safety device, or decal is damaged, illegible, or lost, repair or replace it before beginning operation. Also, tighten any loose fasteners.

Filling the Fuel Tank

- For best results, use only clean, fresh (less than 30 days old), unleaded gasoline with an octane rating of 87 or higher ((R+M)/2 rating method).
- **Ethanol**: Gasoline with up to 10% ethanol (gasohol) or 15% MTBE (methyl tertiary butyl ether) by volume is acceptable. Ethanol and MTBE are not the same. Gasoline with 15% ethanol (E15) by volume is not approved for use. **Never use** gasoline that contains more than 10% ethanol by volume, such as E15 (contains 15% ethanol), E20 (contains 20% ethanol), or E85 (contains 85% ethanol). Using unapproved gasoline may cause performance problems and/or engine damage which may not be covered under warranty.
- **Do not** use gasoline containing methanol.
- **Do not** store fuel either in the fuel tank or fuel containers over the winter unless you use a fuel stabilizer.
- **Do not** add oil to gasoline.

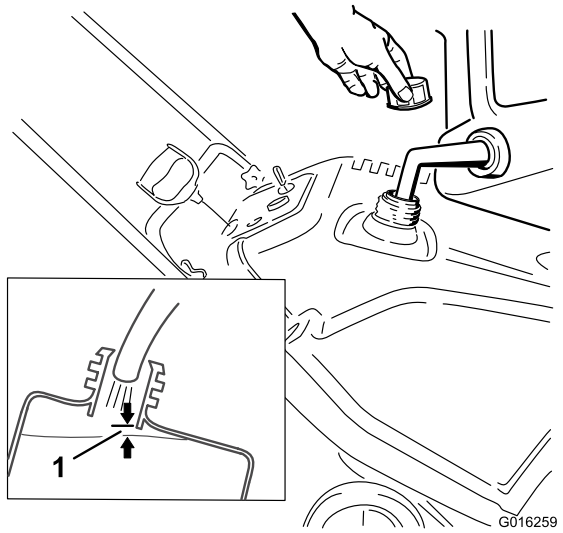

Figure 11

1. 6 mm (1/4 inch)

Note: For best results, purchase only the quantity of gasoline that you expect to use in 30 days. Otherwise, you may add fuel stabilizer to newly purchased gasoline to keep it fresh for up to 6 months.

Checking the Engine-Oil Level

Service Interval: Before each use or daily—Check the engine-oil level and add oil if necessary.

1. Move the machine to a level surface.
2. Clean around the oil-fill cap (Figure 12).

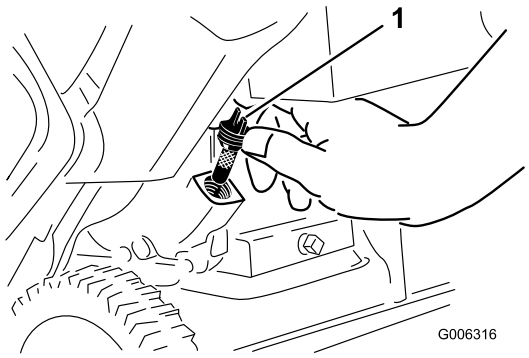

Figure 12

1. Oil-fill cap

3. Unscrew the oil-fill cap and remove it.
4. If the oil level is low, keep the machine in the operating position and **carefully** pour oil into the crankcase until the point of overflow. Wait 3 minutes for the oil to settle and add enough to bring it to the point of overflow. (Max. fill: 0.60 L (20 oz), type: automotive detergent oil with an API service classification of SJ, SL, or higher.)

   Note: You may tip the machine forward (handle up) to make adding oil easier. Remember to return the machine to the operating position before checking the oil level.

   Important: Do not tip the machine all the way forward onto its nose, or fuel may leak out of the machine.
5. Screw the oil-fill cap into the oil-fill hole and tighten it securely by hand.

During Operation

Starting the Engine

1. Turn the ignition key clockwise to the ON position (Figure 13).

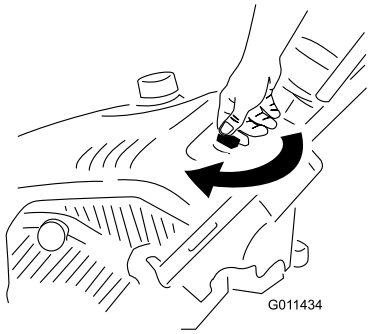

Figure 13

2. Pull out the choke lever (Figure 14 and Figure 15).

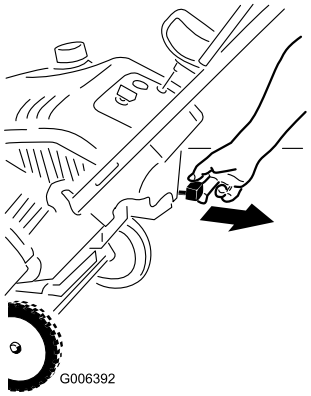

Figure 14

1. Choke lever

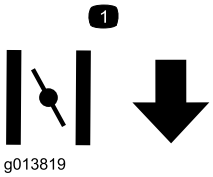

Figure 15

1. Symbols on the choke lever indicating to pull out the choke lever to activate the choke.

3. Firmly push in the primer 3 times with your thumb, holding the primer in for a second before releasing it each time (Figure 16).

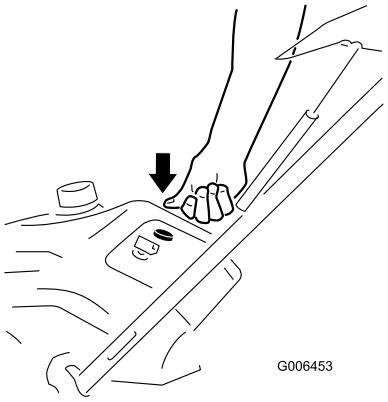

Figure 16

Note: Remove your glove when you push in the primer so that air cannot escape from the primer hole.

Important: Do not use the primer or the choke if the engine has been running and is hot. Excessive priming may flood the engine and prevent it from starting.

4. Connect an extension cord to a power source and the machine, and push the electric-start button (Model 38742 only) (Figure 17), or pull the recoil-start handle (Figure 18).

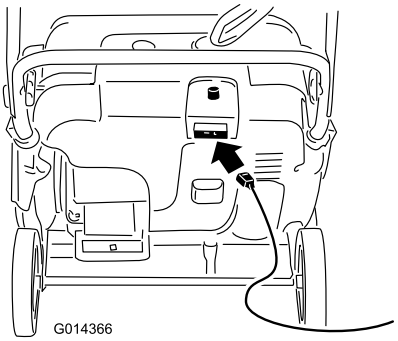

Figure 17

Note: Use only a UL-listed, 16-gauge extension cord recommended for outdoor use that is not longer than 15 m (50 ft).

⚠ WARNING

The electrical cord can become damaged, causing a shock or fire.

Thoroughly inspect the electrical cord before plugging it into a power source. If the cord is damaged, do not use it to start the machine. Replace or repair the damaged cord immediately. Contact an Authorized Service Dealer for assistance.

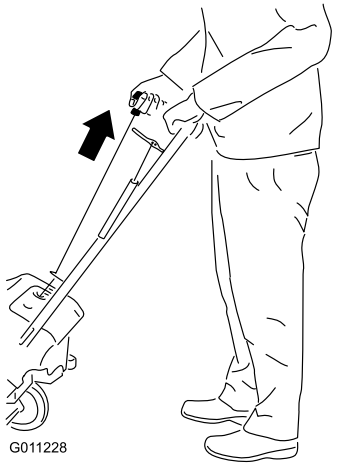

Figure 18

Important: Run the electric starter no more than 10 times at intervals of 5 seconds on, then 5 seconds off. Running the electric starter extensively can overheat and damage it. If the engine does not start after this series of attempts, wait at least 40 minutes to allow the starter to cool before attempting to start it again. If the engine does not start after the second series of attempts, take the machine to an Authorized Service Dealer for service (Model 38742 only).

Note: If you pull the recoil handle and feel no resistance, the starter may be frozen. Thaw out the starter before attempting to start the machine.

5. While the engine is running, push in the choke lever slowly.
6. Unplug the extension cord from the power source and the machine (Model 38742 only).

⚠ CAUTION

If you leave the machine plugged into a power source, someone can inadvertently start the machine and injure people or damage property (Model 38742 only).

Unplug the power cord whenever you are not starting the machine.

Engaging the Rotor Blades

To engage the rotor blades, hold the control bar against the handle (Figure 19).

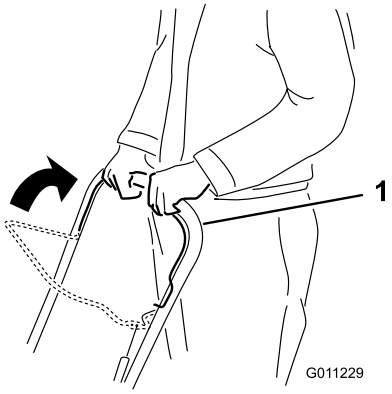

Figure 19

1. Control bar

Disengaging the Rotor Blades

To disengage the rotor blades, release the control bar (Figure 20).

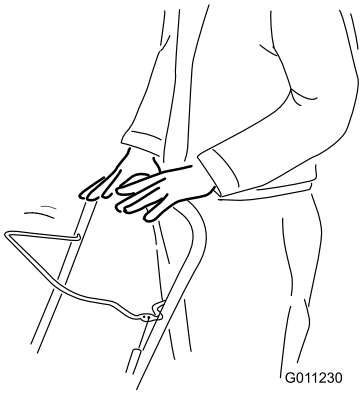

Figure 20

Shutting Off the Engine

To shut off the engine, turn the ignition key counterclockwise to the OFF position (Figure 21).

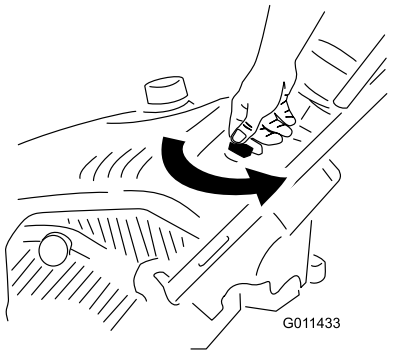

Figure 21

Adjusting the Discharge Chute

To adjust the discharge chute, move the chute handle and the chute-deflector handle as shown (Figure 22).

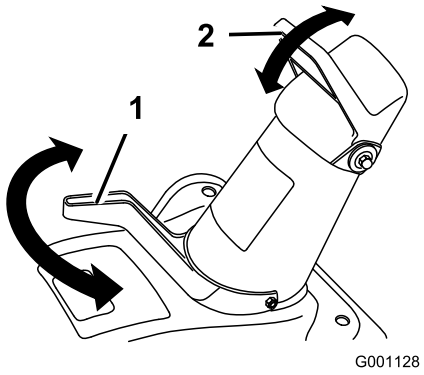

Figure 22

1. Chute handle
2. Chute-deflector handle

Clearing a Clogged Discharge Chute

Important: Hand contact with the rotating rotor blades inside the discharge chute is the most common cause of injury associated with snowthrowers. Never use your hand to clean out the discharge chute.

To clear the chute:

- **Shut off the engine!**
- Wait 10 seconds to ensure that the rotor blades have stopped rotating.
- Always use a clean-out tool, not your hands (Figure 23).



Figure 23

Operating Tips

⚠ WARNING

The rotor blades can throw stones, toys, and other foreign objects and cause serious personal injury to the operator or to bystanders.

- **Keep the area to be cleared free of all objects that the rotor blades could pick up and throw.**
- **Keep all children and pets away from the area of operation.**

- Remove the snow as soon as possible after it falls.
- If the machine does not propel itself forward on slippery surfaces or in heavy snow, push forward on the handle, but allow the machine to work at its own pace.
- Overlap each swath to ensure complete snow removal.
- Discharge the snow downwind whenever possible.

After Operation

Safety

- Never store the machine with fuel in the fuel tank inside a building where ignition sources are present, such as hot water heaters, space heaters, or clothes dryers. Allow the engine to cool before storing in any enclosure.
- When storing the machine for more than 30 days, refer to the Storage section for important details.

Preventing Freeze-up after Use

- Let the engine run for a few minutes to prevent moving parts from freezing. Shut off the engine, wait for all moving parts to stop, and remove ice and snow from the machine.
- Clean off any snow and ice from the base of the chute.
- Rotate the discharge chute left and right to free it from any ice buildup.
- With the ignition key in the OFF position, pull the recoil-starter handle several times or connect the electrical cord to a power source and the machine and push the electric-start button once to prevent the recoil starter and/or the electric starter from freezing up.
- In snowy and cold conditions, some controls and moving parts may freeze. Do not use excessive force when trying to operate frozen controls. If you have difficulty operating any control or part, start the engine and let it run for a few minutes.

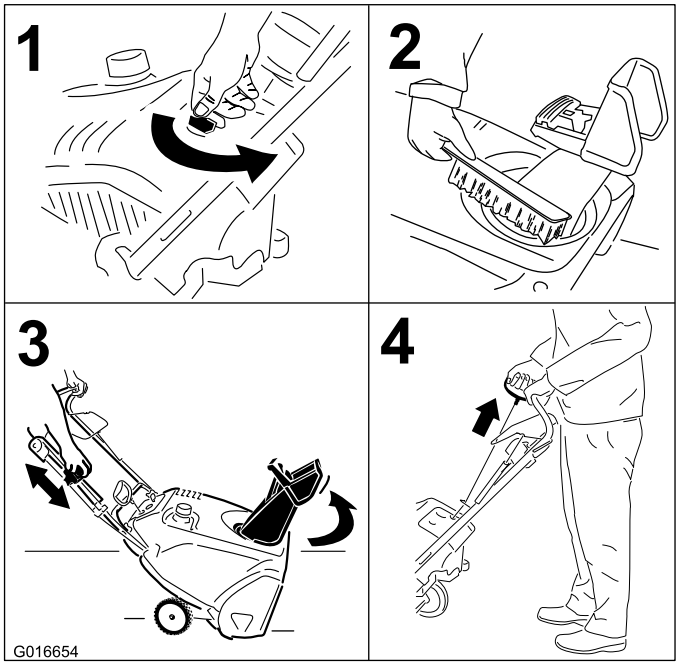

Figure 24

Maintenance

Note: Determine the left and right sides of the machine from the normal operating position.

Recommended Maintenance Schedule(s)

Maintenance Service Interval	Maintenance Procedure
After the first hour	• Check the control cable and adjust it if necessary. • Check for loose fasteners and tighten them if necessary.
After the first 2 hours	• Change the engine oil.
Before each use or daily	• Check the engine-oil level and add oil if necessary.
Yearly	• Check the control cable and adjust it if necessary. • Inspect the rotor blades and have an Authorized Service Dealer replace the rotor blades and scraper if necessary. • Change the engine oil. • Check the spark plug and replace it if necessary. • Check for loose fasteners and tighten them if necessary. • Have an Authorized Service Dealer inspect the drive belt and replace it if necessary.
Yearly or before storage	• Prepare the machine for storage.

Maintenance Safety

Read the following safety precautions before performing any maintenance on the machine:

- Before performing any maintenance, service, or adjustment, shut off the engine and remove the key. If major repairs are ever needed, contact an Authorized Service Dealer.
- Check all fasteners at frequent intervals for proper tightness to be sure the machine is in safe working condition.
- Maintain or replace safety and instruction labels, as necessary.
- Do not change the governor settings on the engine.
- Purchase only genuine Toro replacement parts and accessories.

Adjusting the Control Cable

Checking the Control Cable

Service Interval: After the first hour—Check the control cable and adjust it if necessary.

Yearly—Check the control cable and adjust it if necessary.

Move the control bar back toward the handle to remove the slack in the control cable (Figure 25).

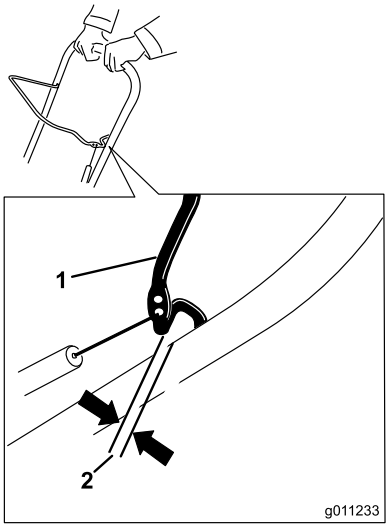

Figure 25

1. Control bar
2. 1/16 inch to 1/8 inch (2 mm to 3 mm) gap

Note: Ensure that a 1/16 inch to 1/8 inch (2 mm to 3 mm) gap exists between the control bar and the handle (Figure 25).

Important: The control cable must contain some slack when you disengage the control bar for the rotor blades to stop properly.

Adjusting the Control Cable

1. Slide up the spring cover and unhook the spring from the adjuster link (Figure 26).

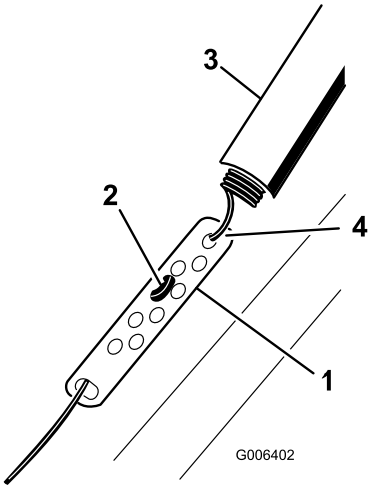

Figure 26

1. Adjuster link
2. Z-fitting
3. Spring cover
4. Unhook the spring here.

Note: You can pull up the adjuster link and cable to make unhooking the spring easier.

2. Move the Z-fitting to a higher or lower hole on the adjuster link as needed to obtain the 1/16 inch to 1/8 inch (2 mm to 3 mm) gap between the control bar and the handle (Figure 26).

Note: Moving the Z-fitting higher decreases the gap between the control bar and the handle; moving it lower increases the gap.

3. Hook the spring to the adjuster link and slide the spring cover over the adjuster link.
4. Check the adjustment; refer to Checking the Control Cable (page 11).

Note: After extended use, the drive belt may wear and lose its proper belt tension. If the drive belt slips (continuously squeals) under a heavy load, disconnect the spring from the adjustor link and move the upper end of the spring to the hole that is further from the pivot point in the control bar (Figure 27). Then connect the spring to the adjustor link and adjust the control cable.

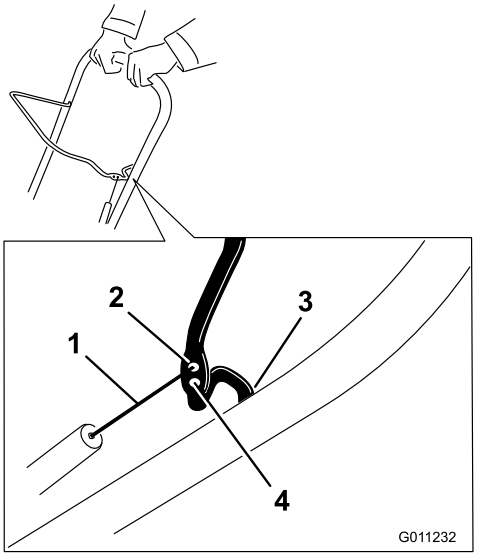

Figure 27

1. Upper end of spring
2. Insert the upper end of spring into this hole
3. Pivot point
4. Remove the upper end of spring from this hole

Note: The belt may slip (squeal) in wet conditions; to dry out the drive system, start the rotor and run it without a load for 30 seconds.

Inspecting the Rotor Blades

Service Interval: Yearly—Inspect the rotor blades and have an Authorized Service Dealer replace the rotor blades and scraper if necessary.

Before each session, inspect the rotor blades for wear. When a rotor blade edge has worn down to the wear-indicator hole, have an Authorized Service Dealer replace the rotor blades and the scraper (Figure 28).

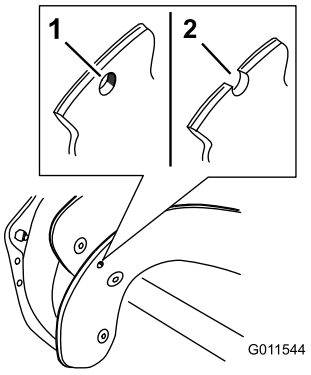

Figure 28

1. The wear-indicator hole is intact; you do not need to replace the rotor blades.
2. The wear-indicator hole is exposed; replace the rotor blades.

Changing the Engine Oil

Service Interval: After the first 2 hours

Yearly

Run the engine a few minutes before changing the oil to warm it. Warm oil flows better and carries more contaminants.

1. Siphon the fuel from the fuel tank into an approved fuel container, or run the engine until it shuts off.
2. Move the machine to a level surface.
3. Place an oil-drain pan under the oil-drain plug, remove the plug, and tip the machine backward and drain the used oil in the pan Figure 29).

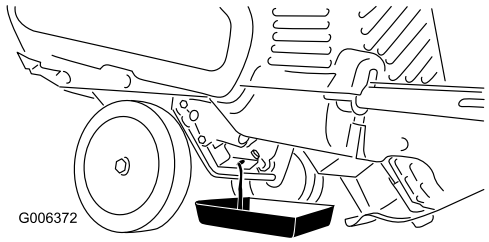

Figure 29

4. After draining the used oil, return the machine to the operating position.
5. Install the oil-drain plug and tighten it securely.
6. Clean around the oil-fill cap (Figure 30).

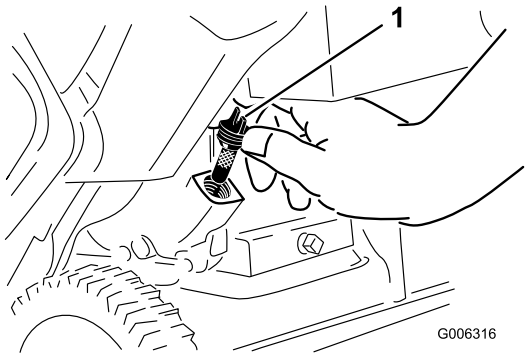

Figure 30

1. Oil-fill cap

7. Unscrew the oil-fill cap and remove it (Figure 30).
8. With the machine in the operating position, **carefully** pour oil into the oil-fill hole. Wait 3 minutes for the oil to settle and add enough to bring it to the point of overflow. There should be very little, if any, oil left in the bottle (Figure 32).

   Note: You may tip the machine forward (handle up) to make adding oil easier. Remember to return the machine to the operating position before checking the oil level.

   Important: Do not tip the machine all the way forward onto its nose; otherwise, fuel may leak out of the machine.

Max fill: 0.60 L (20 oz), type: automotive detergent oil with an API service classification of SJ, SL, or higher.

Use Figure 31 below to select the best oil viscosity for the outdoor temperature range expected.

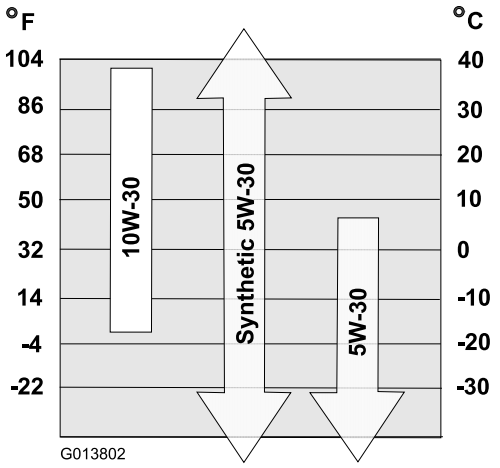

Figure 31

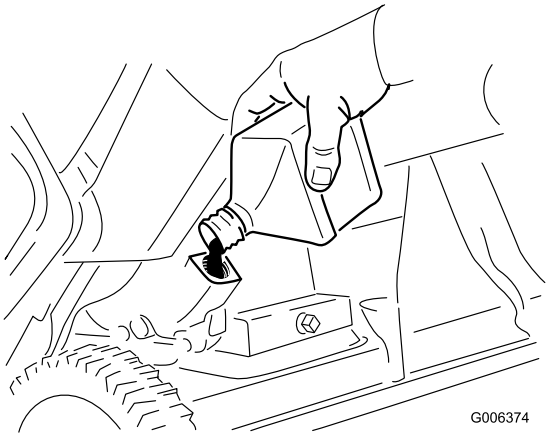

Figure 32

9. Screw the oil-fill cap into the oil-fill hole, and tighten it securely by hand.
10. Wipe up any spilled oil.
11. Dispose of the used oil properly at a local recycling center.

Servicing the Spark Plug

Service Interval: Yearly—Check the spark plug and replace it if necessary.

Use a **NGK BPR6ES or Champion RN9YC** spark plug or equivalent.

1. Shut off the engine and wait for all moving parts to stop.
2. Rotate the discharge chute so that it faces forward.
3. Remove the discharge chute by removing the 3 screws holding the chute and the screws holding the chute seal (Figure 33).

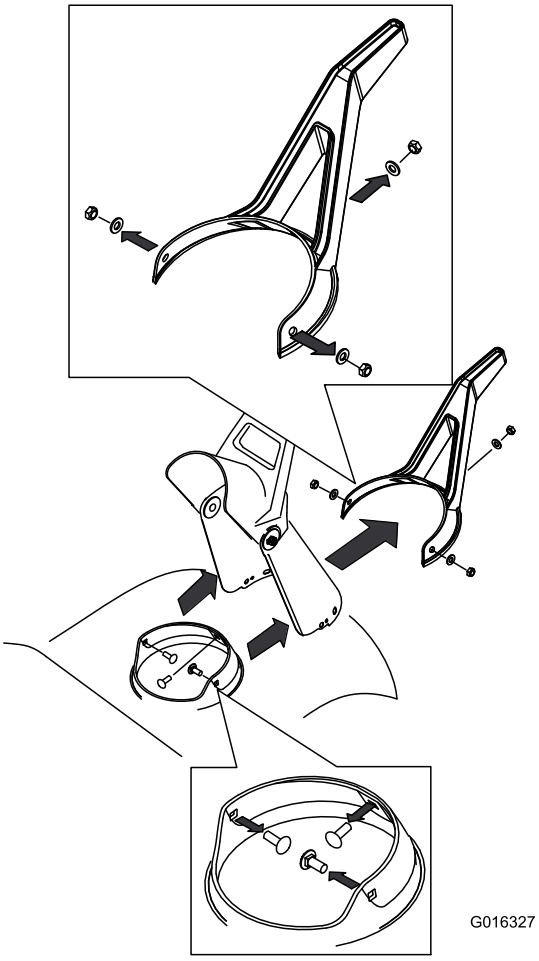

Figure 33

4. Remove the 4 screws that secure the shroud (Figure 34).

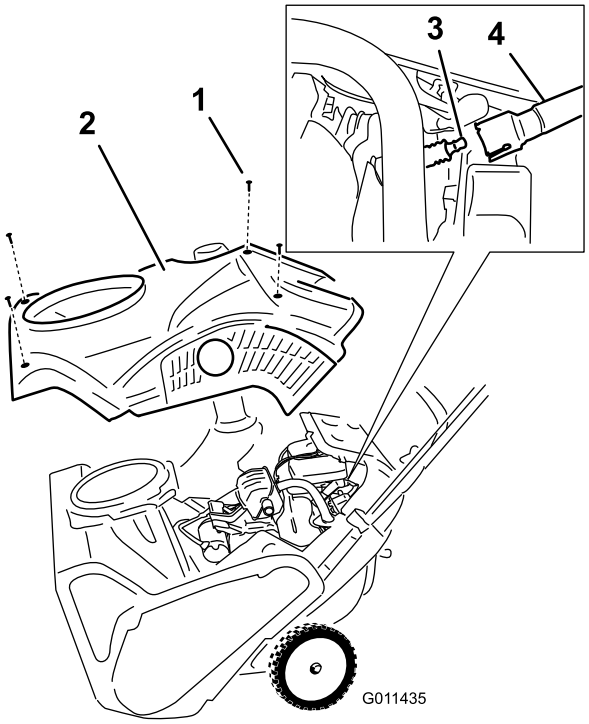

Figure 34

1. Screw (4)
2. Shroud
3. Spark plug
4. Spark-plug wire

5. Remove the fuel-tank cap.
6. Remove the shroud (Figure 34).
7. Install the fuel-tank cap.
8. Disconnect the wire from the spark plug.
9. Clean around the spark plug.
10. Remove the spark plug from the cylinder head.

Important: Replace a cracked, fouled, or dirty spark plug. Do not clean the electrodes because grit entering the cylinder can damage the engine.

11. Set the gap on the plug to 0.030 inch (0.76 mm) as shown in Figure 35.

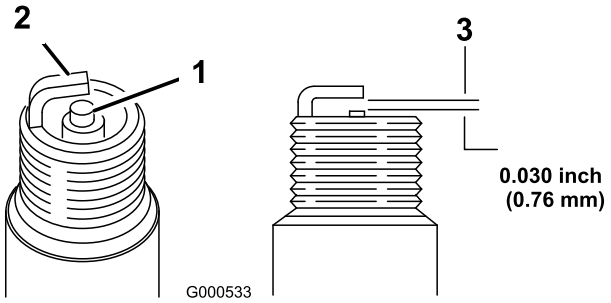

Figure 35

1. Center-electrode insulator
2. Side electrode
3. Air gap (not to scale)

12. Install the spark plug and torque it to 20 to 22 ft-lb (27 to 30 N-m).

13. Connect the wire to the spark plug.

Note: Ensure that the breather tube is routed above the spark plug wire as shown in Figure 36.

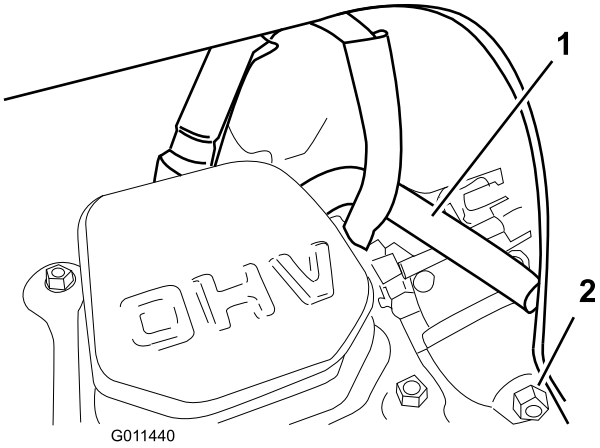

Figure 36

1. Breather tube
2. Carburetor drain bolt

14. Remove the fuel-tank cap.
15. Install the shroud with the screws that you removed in step 4.

Note: Ensure that the upper and lower shrouds fit together in the side grooves.

16. Install the fuel-tank cap.
17. Install the chute seal, the discharge chute, and the discharge-chute handle onto the machine using the hardware that you removed in step 3.

Note: The small screw goes through the small hole in the chute seal at the front of the discharge-chute opening.

Replacing the Drive Belt

If the drive belt becomes worn, oil-soaked, excessively cracked, frayed, or otherwise damaged, replace the belt.

1. Remove the drive belt cover by removing the 3 bolts as shown in Figure 37.

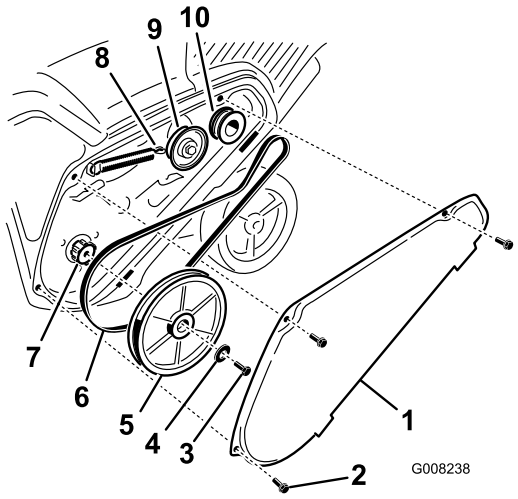

Figure 37

1. Drive-belt cover
2. Bolt (3)
3. Rotor-pulley bolt
4. Curved washer
5. Rotor pulley
6. Drive belt
7. Rotor shaft
8. Brake spring (unhook from idler arm here)
9. Idler pulley
10. Engine pulley

2. Unhook the brake spring from the idler arm to release the belt tension (Figure 37).
3. Remove the screw and curved washer that holds the rotor pulley (Figure 37).
4. Remove the rotor pulley and the drive belt (Figure 37).
5. Install the new drive belt, routing it as shown in (Figure 38).

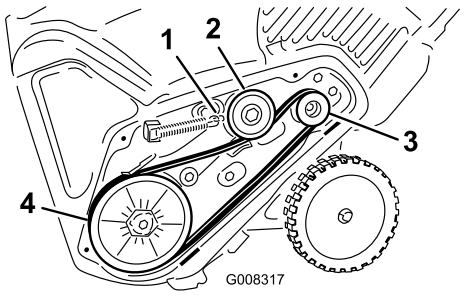

Figure 38

1. Brake spring (install on idler arm here)
2. Idler pulley
3. Engine pulley
4. Rotor pulley

Note: Route the new drive belt first around the engine pulley, then the idler pulley, and finally around the

loose rotor pulley positioned just above the rotor shaft (Figure 37).

6. Install the rotor pulley onto the rotor shaft (Figure 37).
7. Install the curved washer and the rotor-pulley bolt and tighten them securely (Figure 37).

   Note: The concave side of the curved washer goes against the outside of the pulley.
8. Install the brake spring onto the idler arm (Figure 38).
9. Install the drive-belt cover with the bolts that you removed in step 1.

   Note: Ensure that the drive belt is properly adjusted and operating; refer to Checking the Control Cable (page 11) and Adjusting the Control Cable (page 11).

Storage

Storing the Snowthrower

⚠ WARNING

- **Gasoline fumes are highly flammable, explosive, and dangerous if inhaled. If you store the machine in an area with an open flame, the gasoline fumes may ignite and cause an explosion.**
- **Do not store the machine in a house (living area), basement, or any other area where ignition sources may be present, such as hot water and space heaters, clothes dryers, furnaces, and other like appliances.**
- **Do not tip the machine backward with fuel in the fuel tank; otherwise, fuel may leak out of the machine.**

1. On the last refueling of the season, add fuel stabilizer to fresh fuel as directed by the engine manufacturer.
2. Run the engine for 10 minutes to distribute the conditioned fuel through the fuel system.
3. Shut off the engine, allow it to cool, and siphon the fuel tank or run the engine until it shuts off.
4. Start the engine and run it until it shuts off.
5. Choke or prime the engine, start it a third time, and run the engine until it does not start.
6. Drain the fuel in the carburetor through the carburetor-drain bolt (Figure 36) into an approved gasoline container.
7. Dispose of unused fuel properly. Recycle it according to local codes, or use it in your automobile.
8. While the engine is still warm, change the engine oil. Refer to Changing the Engine Oil (page 13).
9. Remove the spark plug.
10. Squirt 2 teaspoons of oil into the spark-plug hole.
11. Install the spark plug by hand and then torque it to 20 to 22 ft-lb (27 to 30 N-m).
12. With the ignition key in the OFF position, pull the recoil-start handle slowly to distribute the oil on the inside of the cylinder.
13. Clean the machine.
14. Touch up chipped surfaces with paint available from an Authorized Service Dealer. Sand affected areas before painting, and use a rust preventative to prevent the metal parts from rusting.
15. Tighten any loose fasteners. Repair or replace any damaged parts.

16. Cover the machine and store it in a clean, dry place out of the reach of children. Allow the engine to cool before storing the machine in any enclosure.

Emission Control Warranty Statement

For the United States, California, and Canada

374-0308

Your Warranty Rights and Obligations

The California Air Resources Board (CARB), the U.S. Environmental Protection Agency (EPA), and The Toro Company, are pleased to explain the emission control system warranty on your 2016–2017 small off-road engine/equipment. In California and the United States, new small off-road engines/equipment must be designed, built, and certified to meet stringent anti-smog standards. The Toro Company warrants the emission control system on your small off-road engine/equipment for the period of time listed below, provided there has been no abuse, neglect, or improper maintenance of your small off-road engine/equipment.

Your emission control system may include parts such as the carburetor, fuel-injection system, the ignition system, catalytic converter, fuel tanks, fuel lines, fuel caps, valves, canisters, filters, vapor hoses, clamps, connectors, and other associated emission-related components.

Where a warrantable condition exists, The Toro Company will repair your small off-road engine/equipment at no cost to you including diagnosis, parts and labor.

Manufacturer's Warranty Coverage

This emission control system is warranted for two years or the duration of The Toro Warranty, whichever is longer. If any emission-related part on your engine/equipment is defective, the part will be repaired or replaced by The Toro Company.

Owner Responsibilities

As the small off-road engine owner, you are responsible for the performance of the required maintenance listed in your *Operator's Manual*. We recommend that you retain all receipts covering maintenance on your small off-road engine/equipment, but we cannot deny warranty solely for the lack of receipts.

As the small off-road engine/equipment owner, you should however be aware that we may deny you warranty coverage if your small off-road engine/equipment or a part has failed due to abuse, neglect, improper maintenance or unapproved modifications.

You are responsible for presenting your small off-road engine/equipment to a Toro Distribution Center or Service Center as soon as a problem exists. The warranty repairs should be completed in a reasonable amount of time, not to exceed thirty (30) days.

If you have any questions regarding your warranty coverage, contact us at:

Customer Care Department, Consumer Division
Toro Warranty Company
8111 Lyndale Avenue South
Bloomington, MN 55420-1196
1-888-384-9939 (U.S. and Canadian customers)
email Customer Support at: www.toro.com

General Emissions Warranty Coverage

The Toro Company warrants to the ultimate purchaser and each subsequent purchaser that the small off-road engine/equipment is:

- Designed, built, and certified to conform with all applicable emissions regulations; and
- Free from defects in materials and workmanship that could cause the failure of a warranted part; and
- Identical in all material respects to the parts as described in the application for certification.

The warranty period begins on the date the small off-road engine/equipment is delivered to an ultimate purchaser. The warranted period is two years or the duration of The Toro Warranty, whichever is longer.

Subject to certain conditions and exclusions as stated below, the warranty on evaporative emissions-related parts is as follows:

1. Any warranted part that is not scheduled for replacement as required maintenance in the written instructions supplied, is warranted for the warranty period stated above. If the part fails during the period of warranty coverage, the part will be repaired or replaced by The Toro Company. Any such part repaired or replaced under warranty will be warranted for the remainder of the warranty period.
2. Any warranted part that is scheduled only for regular inspection in the written instructions supplied is warranted for the warranty period stated above. Any such part repaired or replaced under the warranty will be warranted for the remainder of the warranty period.
3. Any warranted part that is scheduled for replacement as required maintenance in the written instructions supplied is warranted for the period of time before the first scheduled replacement date for that part. If the part fails before the first scheduled replacement, the part will be repaired or replaced by The Toro Company. Any such part repaired or replaced under warranty will be warranted for the remainder of the period prior to the first scheduled replacement point for the part.
4. Repair or replacement of any warranted part under the warranty provisions herein must be performed at an Authorized Service Dealer at no charge to the owner.
5. Warranty services or repairs will be provided at all Service Dealers authorized to service the subject engines or equipment.
6. The small off-road engine/equipment owner will not be charged for diagnostic labor that is directly associated with diagnosis of a defective, emission-related warranted part, provided that such diagnostic work is performed at an Authorized Service Dealer.
7. The Toro Company is liable for damages to other engine/equipment components caused by a failure under warranty of any warranted part.
8. Throughout the small off-road engine/equipment warranty period stated above, The Toro Company will maintain a supply of warranted parts sufficient to meet the expected demand for such parts.
9. Manufacturer approved replacement parts may be used in the performance of any warranty maintenance or repairs and must be provided without charge to the owner. Such use will not reduce the warranty obligations of The Toro Company.
10. Add-on or modified parts that are not approved by The Toro Company may not be used. The use of a non-approved add-on or modified parts by the purchaser will be grounds for disallowing a warranty claim. The Toro Company will not be liable to warrant failures of warranted parts caused by the use of an non-approved add-on or modified parts.

Warranted Parts

The following emission warranty parts are covered, to the extent these parts were present on the Toro engine/equipment and/or Toro supplied fuel system:

1. Fuel System Parts
   - Carburetor and internal parts
   - Cold starting enrichment (primer or choke)
   - Fuel pump
   - Fuel line, fittings, and clamps
   - Fuel tank, cap, and tether
   - Carbon canister
2. Air Induction System
   - Air cleaner
   - Intake manifold
   - Crankcase vent and line(s)
   - Purge line and fittings
3. Ignition System
   - Spark plug(s) and wire(s)
   - Magneto ignition system
4. Catalytic Exhaust System
   - Catalytic converter
   - Exhaust manifold
   - Air injector system and valve(s)
5. Miscellaneous Items Used in Emission Control System
   - Valves, switches, and linkages
   - Connectors, fittings, and brackets

The Toro Warranty and The Toro 2-Year GTS Starting Guarantee

A Two-Year Full Warranty (45 Day Limited Warranty for Commercial Use)

Power Clear
Single-Stage Snowthrowers

The Toro Starting Guarantee

The Toro Company and its affiliate, Toro Warranty Company, pursuant to an agreement between them, jointly guarantee that your Toro GTS (Guaranteed to Start) engine, when used for residential purposes*, will start on the first or second pull for two (2) years from the date of purchase, if you provide the routine maintenance it requires, or we will fix it free of charge. The GTS Starting Guarantee does not apply under commercial use.

This warranty covers the cost of parts and labor, but you must pay transportation costs.

The Toro Total Coverage Guarantee

The Toro Company and its affiliate, Toro Warranty Company, pursuant to an agreement between them, jointly promise to repair the Toro Product listed below if used for residential purposes*, if defective in materials or workmanship or if it stops functioning due to the failure of a component for the period listed below.

This warranty covers the cost of parts and labor, but you must pay transportation costs.

The following time periods apply from the original date of purchase:

Products	Warranty Period
Power Clear Snowthrowers and Attachments	2 years

Limited Warranty for Commercial Use

Gas-powered Toro Products used for commercial, institutional, or rental use, are warranted for 45 days against defects in materials or workmanship. Components failing due to normal wear are not covered by this warranty.

Instructions for Obtaining Warranty Service

If you think that your Toro Product contains a defect in materials or workmanship, follow this procedure:

1. Contact any Authorized Toro Service Dealer to arrange service at their dealership. To locate a dealer convenient to you, access our web site at www.Toro.com. You may also call the numbers listed in item #3 to use the 24-hour Toro Dealer locator system.
2. Bring the product and your proof of purchase (sales receipt) to the Service Dealer. The dealer will diagnose the problem and determine if it is covered under warranty.
3. If for any reason you are dissatisfied with the Service Dealer's analysis or with the assistance provided, contact us at:

   Toro Warranty Company
   Customer Care Department, RLC Division
   8111 Lyndale Avenue South
   Bloomington, MN 55420-1196
   Toll free at 866-336-5205 (U.S. customers)
   Toll free at 866-854-9033 (Canadian customers)

Owner Responsibilities

You must maintain your Toro Product by following the maintenance procedures described in the *Operator's Manual*. Such routine maintenance, whether performed by a dealer or by you, is at your expense.

Items and Conditions Not Covered

There is no other express warranty except for special emission system coverage and engine warranty coverage on some products. This express warranty does not cover the following:

- Cost of regular maintenance or replacement of wear parts, such as rotor blades (paddles), scraper blades, belts, fuel, lubricants, oil changes, spark plugs, light bulbs, cable/linkage or brake adjustments
- Any product or part which has been altered or misused or requires replacement or repair due to accidents or lack of proper maintenance
- Pickup and delivery charges
- Operational misuse, neglect, or accidents
- Repairs or attempted repairs by anyone other than an Authorized Toro Service Dealer
- Repairs necessary due to failure to follow recommended fuel procedure (consult *Operator's Manual* for more details)
  - Removing contaminants from the fuel system is not covered
  - Use of old fuel (more than one month old) or fuel which contains more than 10% ethanol or more that 15% MTBE
  - Failure to drain the fuel system prior to any period of non-use over one month
- Repairs or adjustments to correct starting difficulties due to the following:
  - Failure to follow proper maintenance procedures
  - Snowthrower auger/paddles striking an object
  - Contaminants in the fuel system
  - Improper fuel (consult your *Operator's Manual* if in doubt)
  - Failure to drain the fuel system prior to any period of non-use over one month
- Special operational conditions where starting may require more than two pulls:
  - First time starts after extended period of non-use over three months or seasonal storage
  - Improper starting procedures
  - Starting in -10° F (-23° C) or below temperatures

If you are having difficulty starting your unit, please check the *Operator's Manual* to ensure that you are using the correct starting procedures. This can save an unnecessary visit to a Service Dealer.

General Conditions

All repairs covered by these warranties must be performed by an Authorized Toro Service Dealer using Toro approved replacement parts. Repair by an Authorized Toro Service Dealer is your sole remedy under this warranty.

Neither The Toro Company nor Toro Warranty Company is liable for indirect, incidental, or consequential damages in connection with the use of the Toro Products covered by these warranties, including any cost or expense of providing substitute equipment or service during reasonable periods of malfunction or non-use pending completion of repairs under these warranties.

Some states do not allow exclusions of incidental or consequential damages, so the above exclusions may not apply to you.

This warranty gives you specific legal rights, and you may also have other rights which vary from state to state.

Countries Other than the United States or Canada

Customers who have purchased Toro products exported from the United States or Canada should contact their Toro Distributor (Dealer) to obtain guarantee policies for your country, province, or state. If for any reason you are dissatisfied with your Distributor's service or have difficulty obtaining guarantee information, contact the Toro importer. If all other remedies fail, you may contact us at Toro Warranty Company.

Australian Consumer Law: Australian customers will find details relating to the Australian Consumer Law either inside the box or at your local Toro Dealer.

*Residential purposes means use of the product on the same lot as your home. Use at more than one location, or institutional or rental use, is considered commercial use, and the commercial use warranty would apply.