Form No. 3406-749 Rev A

Power Max® Heavy Duty 826 OXE Snowthrower

Model No. 38805—Serial No. 400010798 and Up

Operator's Manual

Introduction

⚠ WARNING

CALIFORNIA
Proposition 65 Warning

This product contains a chemical or chemicals known to the State of California to cause cancer, birth defects, or reproductive harm.

The engine exhaust from this product contains chemicals known to the State of California to cause cancer, birth defects, or other reproductive harm.

This machine is intended to be used by residential homeowners or professional, hired operators. It is designed for removing snow from paved surfaces, such as driveways and sidewalks, and other surfaces for traffic on residential or commercial properties. It is not designed for removing materials other than snow, nor is a model with a pivoting scraper designed for clearing off gravel surfaces.

Read this information carefully to learn how to operate and maintain your machine properly and to avoid injury and machine damage. You are responsible for operating the machine properly and safely.

You may contact Toro directly at www.Toro.com for machine and accessory information, help finding a dealer, or to register your machine.

Whenever you need service, genuine Toro parts, or additional information, contact an Authorized Service Dealer or Toro Customer Service and have the model and serial numbers of your machine ready. Figure 1 identifies the location of the model and serial numbers on the machine. Write the numbers in the space provided.

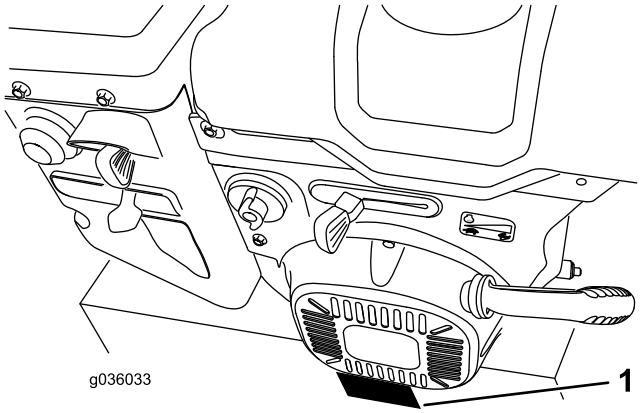

Figure 1

1. Model and serial number location

Model No. _____

Serial No. _____

This manual identifies potential hazards and has safety messages identified by the safety-alert symbol (Figure 2), which signals a hazard that may cause serious injury or death if you do not follow the recommended precautions.



Figure 2

1. Safety-alert symbol

This manual uses 2 words to highlight information. **Important** calls attention to special mechanical information and **Note** emphasizes general information worthy of special attention.

© 2016—The Toro® Company
8111 Lyndale Avenue South
Bloomington, MN 55420

Register at www.Toro.com.

Original Instructions (EN)
Printed in the USA
All Rights Reserved

3406-749 A

Important: **If you are using this machine above 1500 m (5,000 ft) for a continuous period, ensure that the High Altitude Kit has been installed so that the engine meets CARB/EPA emission regulations. The High Altitude Kit increases engine performance while preventing spark-plug fouling, hard starting, and increased emissions. Once you have installed the kit, attach the high-altitude label next to the serial decal on the machine. Contact any Authorized Toro Service Dealer to obtain the proper High Altitude Kit and high-altitude label for your machine. To locate a dealer convenient to you, access our website at www.Toro.com or contact our Toro Customer Care Department at the number(s) listed in your Emission Control Warranty Statement.**

Remove the kit from the engine and restore the engine to its original factory configuration when running the engine under 1500 m (5,000 ft). Do not operate an engine that has been converted for high-altitude use at lower altitudes; otherwise, you could overheat and damage the engine.

If you are unsure whether or not your machine has been converted for high-altitude use, look for the following label (Figure 3).

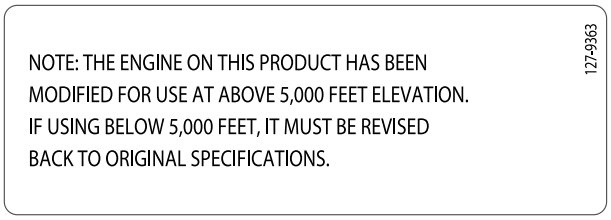

Figure 3

This spark ignition system complies with Canadian ICES-002.

Contents

Introduction 1
Safety 2
Safety and Instructional Decals 3
Setup 5
1 Installing the Upper Handle 5
2 Installing the Wheel-Clutch-Cable Ends 6
3 Installing the Traction-Control Linkage 7
4 Installing the Chute-Control Rod 8
5 Connecting the Wire to the Headlight 9
6 Checking the Engine-Oil Level 9
7 Checking the Tire Pressure 9
8 Checking the Skids and Scraper 9
9 Checking the Operation of the Traction Drive 9
Product Overview 11
Operation 11
Before Operation 11
Safety 11
Filling the Fuel Tank 11
During Operation 12
Safety 12
Freewheeling or Using the Self-Propel Drive 12
Starting the Engine 13
Shutting Off the Engine 15
Operating the Traction Drive 15
Using the Wheel-Clutch Levers 15
Operating the Speed Selector 16
Operating the Auger/Impeller Drive 16
Operating the Quick Stick® 17
Unclogging the Discharge Chute 17
Operating Tips 18
After Operation 18
Safety 18
Preventing Freeze-up after Use 18
Maintenance 19
Recommended Maintenance Schedule(s) 19
Maintenance Safety 19
Preparing for Maintenance 19
Checking the Engine-Oil Level 20
Checking and Adjusting the Skids and Scraper 20
Checking and Adjusting the Traction Cable 20
Checking and Adjusting the Auger/Impeller Cable 21
Checking the Auger-Gearbox-Oil Level 22
Changing the Engine Oil 22
Lubricating the Hex Shaft 23
Replacing the Spark Plug 23
Adjusting the Discharge-Chute Latch 24
Replacing the Drive Belts 25
Replacing the Headlight Bulb 25
Storage 26
Preparing the Machine for Storage 26
Removing the Machine from Storage 26
Troubleshooting 27

Safety

This machine meets or complies with ANSI B71.3 specifications in effect at the time of production.

- Read and understand the contents of this *Operator's Manual* before you start the engine. Ensure that everyone using this product knows how to use the product and understands the warnings.
- Do not your put hands or feet near moving components on the machine.
- Do not operate machine without all guards and other safety protective devices in place and working on the machine.
- Keep clear of any discharge opening. Keep bystanders a safe distance away from the machine.

- Keep children out of the operating area. Never allow children to operate the machine.
- Shut off the engine before unclogging, servicing, or fueling the machine.

You can find additional items of safety information in their respective sections throughout this manual.

Safety and Instructional Decals

Safety and instruction decals are located near areas of potential danger. Replace damaged or missing decals.

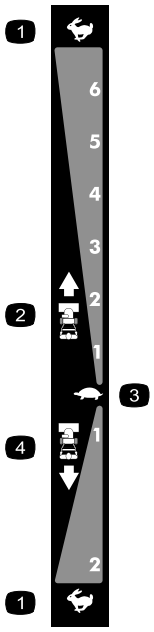

106-4525

Order Part No. 112-6633

1. Fast
2. Forward speeds
3. Slow
4. Reverse speeds



107-3040

1. Cutting dismemberment, impeller and cutting dismemberment, auger hazards—keep bystanders a safe distance away from the snowthrower.

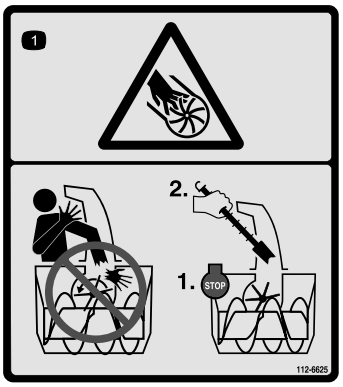

112-6625

Order Part No. 112-6629

1. Cutting/dismemberment hazard, impeller—do not place your hand in the chute; shut off the engine before leaving the operator's position; use the tool to clear the chute.



112-6627

1. Left turn control
2. Traction drive—squeeze the lever to engage; release the lever to disengage.
3. Warning—read the *Operator's Manual.*
4. Cutting/dismemberment hazard, impeller—do not place your hand in the chute; shut off the engine before leaving the operator's position; use the tool to clear the chute.
5. Cutting/dismemberment hazard, impeller—keep away from moving parts; remove the ignition key and read the instructions before servicing or performing maintenance.
6. Thrown object hazard—keep bystanders a safe distance away from the snowthrower.
7. Auger/impeller drive—squeeze the lever to engage; release the lever to disengage.
8. Right turn control

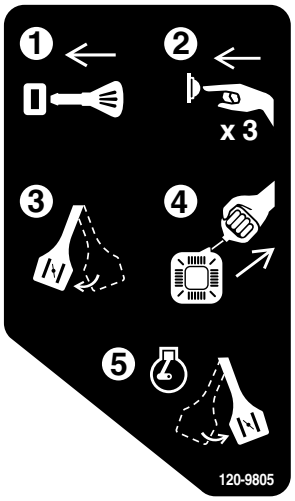

120-9805

1. Insert the key.
2. Prime the engine 3 times.
3. Engage the choke.
4. Pull the starter cord.
5. Once the engine is running, disengage the choke.



131-6487

1. Engine—shut off
2. Slow
3. Fast

Setup

Loose Parts

Use the chart below to verify that all parts have been shipped.

Procedure	Description	Qty.	Use
1	Handle bolt Curved washer Locknut	4 4 4	Install the upper handle.
2	No parts required	–	Install the wheel-clutch-cable ends.
3	No parts required	–	Install the traction-control linkage.
4	Carriage bolt Locknut	2 2	Install the chute-control rod.
5	Cable tie	1	Connect the wire to the headlight.
6	No parts required	–	Check the engine-oil level.
7	No parts required	–	Check the tire pressure.
8	No parts required	–	Check the skids and scraper.
9	No parts required	–	Check the operation of the traction drive.

1

Installing the Upper Handle

Parts needed for this procedure:

4	Handle bolt
4	Curved washer
4	Locknut

Procedure

Note: Do not remove the rubber band on the cables until you have installed the upper handle.

1. Lift and rotate the upper handle and position it over the lower handle (Figure 4).

   Important: Route the cables attached to the Quick Stick inside the upper handle legs and ensure that the cables and the wire for the headlight are not pinched between the handle sections.

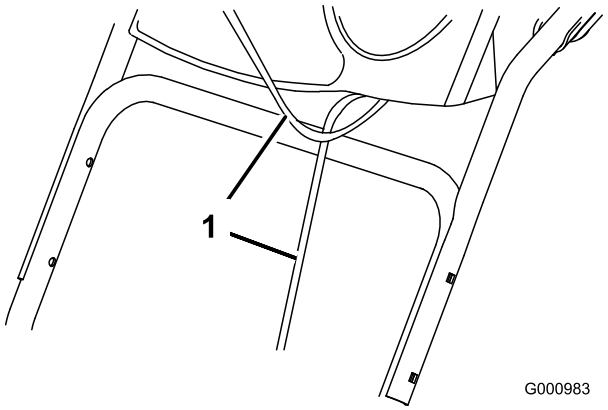

Figure 4

1. Cables

2. Secure the upper handle with 4 handle bolts, 4 curved washers, and 4 locknuts from the loose-parts bag (Figure 5).

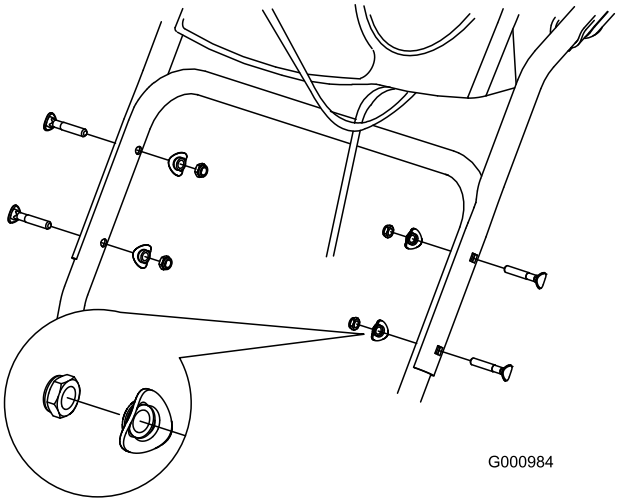

Figure 5

2

Installing the Wheel-Clutch-Cable Ends

No Parts Required

Procedure

1. Unwrap the cable ends from the lower handle (Figure 6).

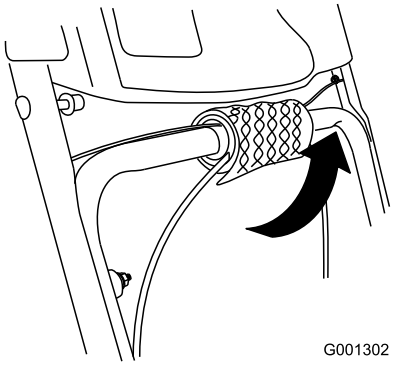

Figure 6

2. Route either the left or right cable end over the lower handle and insert the cable end into the hole in the corresponding wheel-clutch lever (Figure 7).

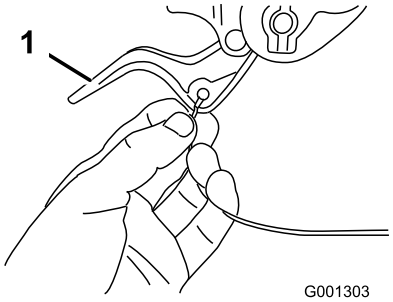

Figure 7

1. Wheel-clutch lever

3. Remove the nut and washer from the handle, attach the cable clamp on the cable to the handle, install the washer and the nut, and tighten the nut by hand (Figure 8).

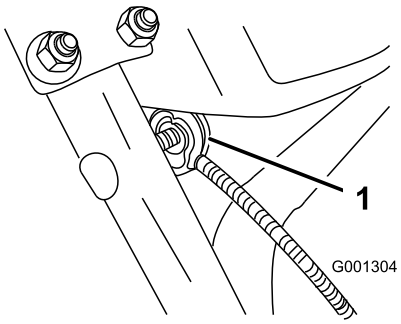

Figure 8

1. Cable clamp (2)

Important: Ensure that the curved side of the cable clamp is against the handle and that the cable is routed below the clamp bolt. The cable must be in a straight line from the cable clamp to the point where it attaches to the wheel-clutch lever.

4. Pull the cable jacket down gently until the wheel-clutch lever is down and the slack is out of the cable, then tighten the cable-clamp nut securely (Figure 9).

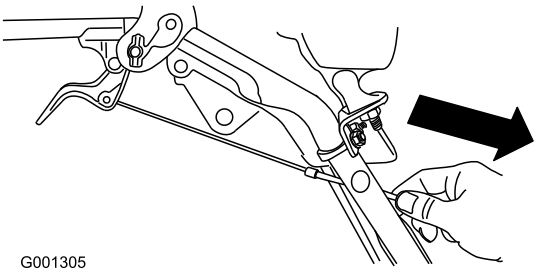

Figure 9

5. Squeeze the lever fully, then check the gap between the bottom of the handle and the wheel-clutch lever end (Figure 10).

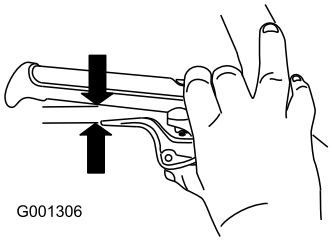

Figure 10

Note: The gap should be approximately the thickness of a pencil (6 mm or 1/4 inch). If it is greater, loosen the cable clamp nut, slide the cable jacket up slightly, tighten the cable clamp nut, and check the gap again.

6. Repeat steps 2 through 5 for the other cable.

3

Installing the Traction-Control Linkage

No Parts Required

Procedure

1. Remove the hairpin cotter and washer from the lower end of the speed-control rod and insert the lower end of the rod into the lower link arm so that the bent end of the speed-control rod faces rearward (Figure 11).

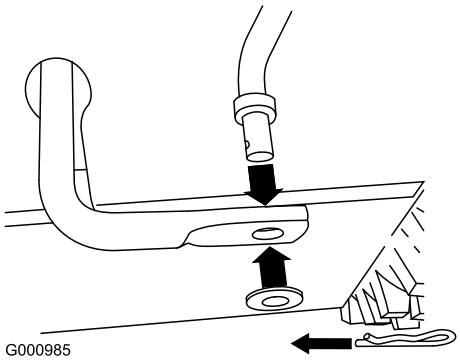

Figure 11

2. Secure the lower end of the speed-control rod with the washer and hairpin cotter that you previously removed.
3. Remove the hairpin cotter and the outer washer from the trunnion on the upper end of the speed-control rod (Figure 12).

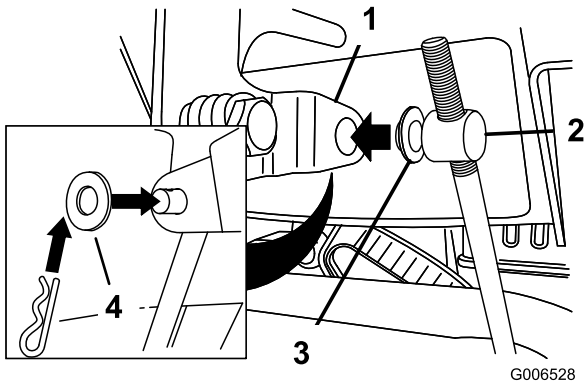

Figure 12

1. Speed-selector lever
2. Trunnion
3. Inner washer
4. Outer washer

Note: To make installation easier, leave the flat washer on the trunnion (Figure 12).

4. Shift the speed-selector lever into Position R2.
5. Rotate the lower link arm fully upward (counterclockwise) as shown in Figure 13.

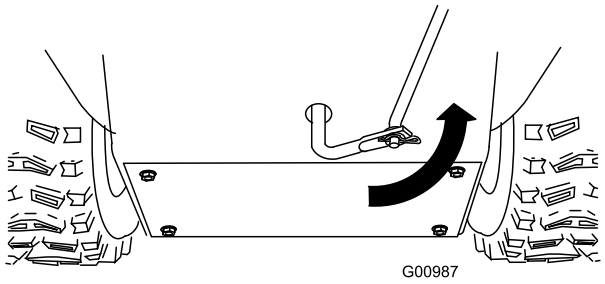

Figure 13

6. Lift up the speed-control rod and insert the trunnion into the hole in the speed-selector lever (Figure 12).

Note: If the trunnion does not fit into the hole when you lift up on the speed-control rod, rotate the trunnion upward or downward on the speed-control rod until it fits.

7. Secure the trunnion and upper end of the speed control rod with the outer washer and the hairpin cotter that you previously removed.

Note: For easier installation, look down through the opening in the speed selector (Figure 14).

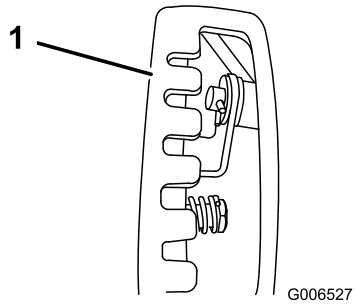

Figure 14

1. Speed selector

4

Installing the Chute-Control Rod

Parts needed for this procedure:

2	Carriage bolt
2	Locknut

Procedure

1. Unwrap the Quick Stick and rotate it so that it is upright and in the center.
2. Hold the blue trigger cap down and pull the lever fully rearward.

   Note: The discharge chute and deflector should face forward. If they do not, hold the blue trigger cap down (but do not move the Quick Stick) and rotate the discharge chute until they do.
3. Align the flattened back end of the long chute-control rod with the flattened front end of the short rod that extends from the control panel so that they nest together (Figure 15).

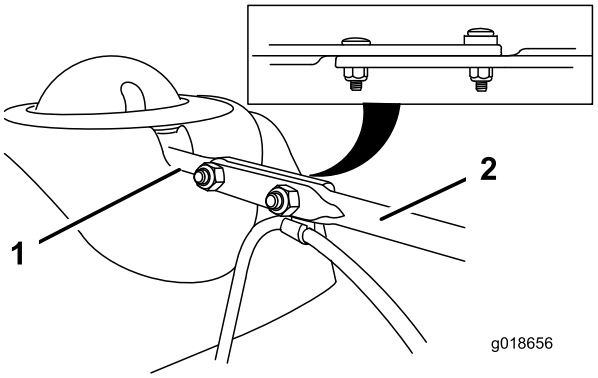

Figure 15

1. Short rod
2. Long chute-control rod

4. Insert the front end of the rod into the opening in the back of the chute-gear cover until it slides into the chute gear (Figure 16).

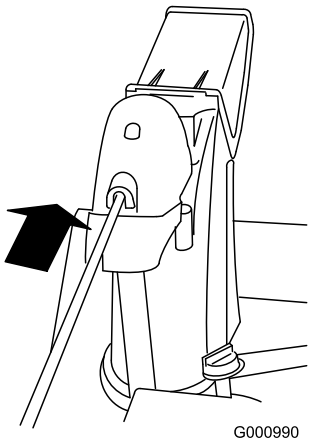

Figure 16

5. Align the holes in the nested ends of the rods and insert 2 carriage bolts (in the loose-parts bag) through the short rod from the left side of the machine (from the operating position).
6. Insert the cable clip that supports the deflector cable onto the forward carriage bolt, and secure the carriage bolts with locknuts from the loose-parts bag (Figure 17).

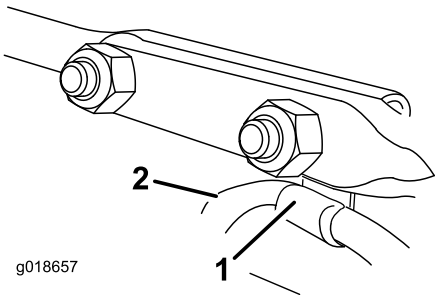

Figure 17

1. Cable clip
2. Deflector cable

7. Hold the blue trigger cap down and rotate the Quick Stick in a circle to ensure that the chute and deflector operate smoothly.

5

Connecting the Wire to the Headlight

Parts needed for this procedure:

1	Cable tie

Procedure

1. Insert the wire connector on the loose end of the wire straight into the back of the headlight until it is securely in place (Figure 18).

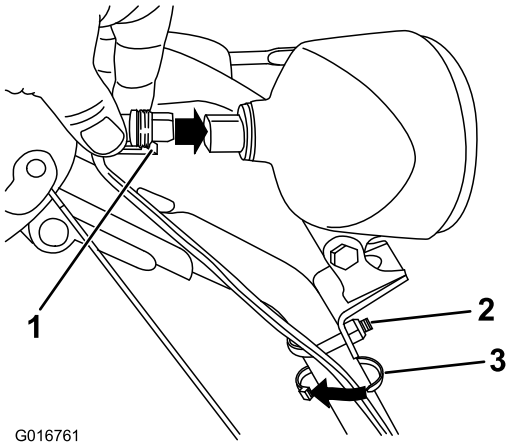

Figure 18

1. Plastic clip on wire connector
2. U-bolt
3. Cable tie

Note: Ensure that the plastic clip on the wire connector is on the bottom (Figure 18).

2. Secure a cable tie (from the loose-parts bag) around the wire and the handle about 2.5 cm (1 inch) below the U-bolt (Figure 18).

6

Checking the Engine-Oil Level

No Parts Required

Procedure

Note: Your machine comes with oil in the engine crankcase. Before starting the engine, check the oil level and add oil if necessary.

Refer to Checking the Engine-Oil Level (page 20).

7

Checking the Tire Pressure

No Parts Required

Procedure

The tires are overinflated at the factory for shipping. Reduce the pressure equally in both tires to between 116 and 137 kPa (17 and 20 psi).

8

Checking the Skids and Scraper

No Parts Required

Procedure

Refer to Checking and Adjusting the Skids and Scraper (page 20).

9

Checking the Operation of the Traction Drive

No Parts Required

Procedure

⚠ CAUTION

If the traction drive is not properly adjusted, the machine may move in the direction opposite of what you intended, causing injury and/or property damage.

Carefully check the traction drive and adjust it properly, if necessary.

Note: To check the operation of the traction drive, the self-propel feature must be engaged by ensuring the wheels are pinned in the axle. Refer to Freewheeling or Using the Self-Propel Drive (page 12).

1. Start the engine; refer to Starting the Engine (page 13).
2. Move the speed selector to Position R1; refer to Operating the Speed Selector (page 16).
3. Squeeze the left (traction) lever to the handgrip (Figure 19).

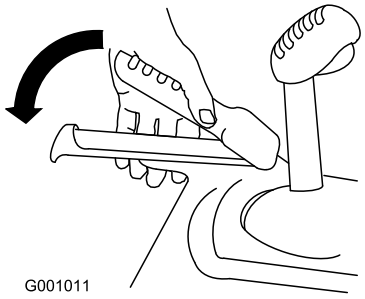

Figure 19

The machine should move rearward. If the machine does not move or moves forward, complete the following:

A. Release the traction lever and shut off the engine.

B. Disconnect the trunnion from the speed-selector lever (Figure 12).

C. Turn the trunnion downward (clockwise) on the speed-control rod (Figure 12).

D. Connect the trunnion to the speed-selector lever (Figure 12).

4. Release the traction lever.
5. Move the speed selector to the Position F1; refer to Operating the Speed Selector (page 16).
6. Squeeze the left (traction) lever to the handgrip (Figure 19).

   The machine should move forward. If the machine does not move or moves rearward, complete the following:

   A. Release the traction lever and shut off the engine.

   B. Disconnect the trunnion from the speed-selector lever (Figure 12).

   C. Turn the trunnion upward (counterclockwise) on the speed-control rod (Figure 12).

   D. Connect the trunnion to the speed-selector lever (Figure 12).

7. If you made any adjustments, repeat this procedure until no adjustments are required.

Important: If the machine moves when the traction lever is in the released position, check the traction cable; refer to Checking and Adjusting the Traction Cable (page 20) or take the machine to an Authorized Service Dealer for service.

Product Overview

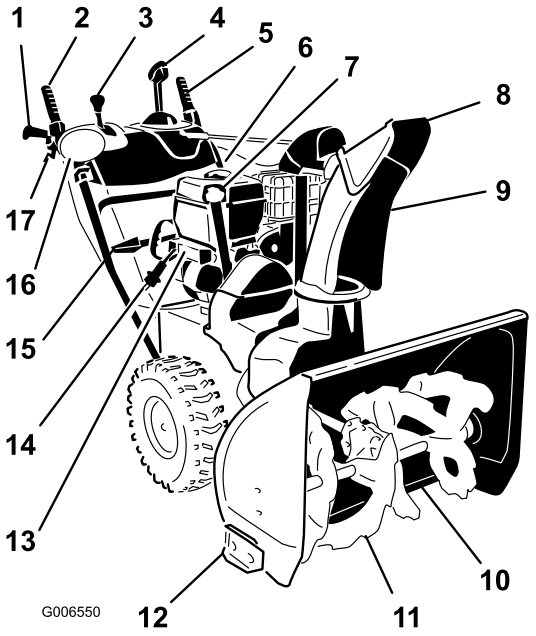

Figure 20

1. Handgrip (2)
2. Auger/impeller lever
3. Speed-selector lever
4. Quick Stick™ discharge-chute control
5. Traction lever
6. Fuel-tank cap
7. Oil-fill tube/dipstick
8. Chute deflector
9. Discharge chute
10. Scraper
11. Auger
12. Skid (2)
13. Electric-start button
14. Electric-start plug-in
15. Snow-cleanout tool
16. Headlilght
17. Wheel-clutch lever

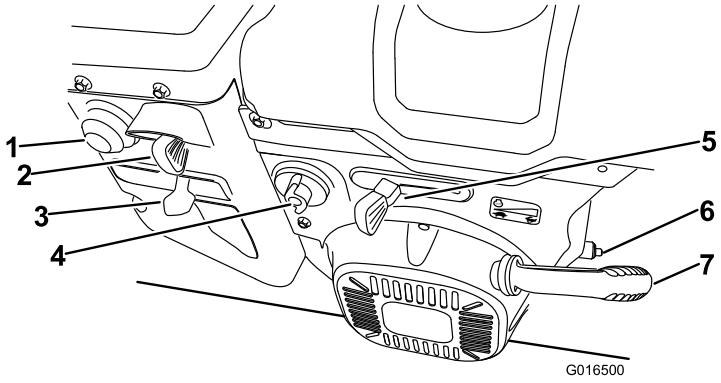

Figure 21

1. Primer
2. Ignition switch
3. Choke
4. Fuel-shutoff valve
5. Throttle
6. Oil-drain plug
7. Recoil-start handle

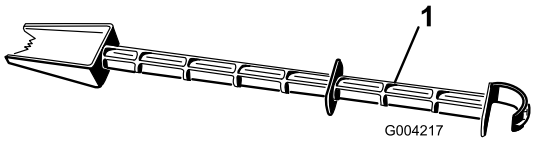

Figure 22

1. Snow-cleanout tool (attached to the handle)

Operation

Note: Determine the left and right sides of the machine from the normal operating position.

Before Operation

Safety

- Use extension cords and receptacles as specified by the manufacturer for all machines with electric-starting motors.
- Do not operate the machine without wearing adequate winter garments. Avoid loose-fitting clothing that can get caught in moving parts. Wear substantial, slip-resistant footwear that will improve footing on slippery surfaces.
- Always wear safety glasses or eye protection during operation or while performing an adjustment or repair to protect your eyes from foreign objects that the machine may throw.
- Thoroughly inspect the area where you will use the machine and remove all doormats, sleds, boards, wires, and other foreign objects.
- If a shield, safety device, or decal is damaged, illegible, or lost, repair or replace it before beginning operation. Also, tighten any loose fasteners.

Filling the Fuel Tank

- For best results, use only clean, fresh, unleaded gasoline with an octane rating of 87 or higher ((R+M)/2 rating method).
- Oxygenated fuel with up to 10% ethanol or 15% MTBE by volume is acceptable.
- **Do not** use ethanol blends of gasoline (such as E15 or E85) with more than 10% ethanol by volume. Performance problems and/or engine damage may result which may not be covered under warranty.
- **Do not** use gasoline containing methanol.
- **Do not** store fuel either in the fuel tank or fuel containers over the winter unless you use a fuel stabilizer.
- **Do not** add oil to gasoline.

Important: To reduce starting problems, add fuel stabilizer to the fuel all season, mixing it with gasoline less than 30 days old.

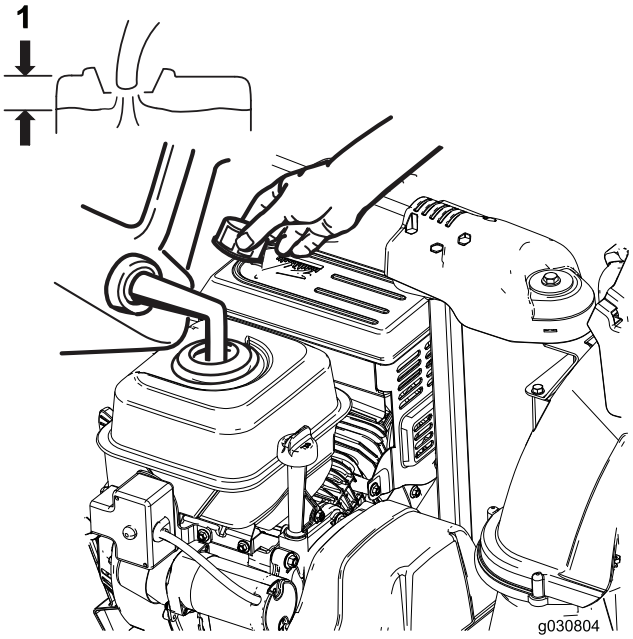

Figure 23

1. Do not fill above the bottom of the fuel-tank neck.

During Operation

Safety

- **Rotating auger blades can injure fingers or hands.** Stay behind the handles and away from the discharge opening while operating the machine. **Keep your face, hands, feet, and any other part of your body or clothing away from moving or rotating parts.**
- Never direct the discharge toward people or areas where property damage can occur.
- Exercise caution to avoid slipping or falling. Always be sure of your footing, and keep a firm hold on the handles. Walk; never run.
- Exercise extreme caution when operating on slopes.
- Never operate the machine without good visibility or light.
- Look behind and use care when backing up with the machine.
- When not actively clearing snow, disengage power to the rotor blades.
- Use extension cords and receptacles as specified by the manufacturer for all machines with electric-starting motors.
- Do not attempt to clear snow from a gravel or crushed rock surface. This product is intended for use only on paved surfaces.
- Do not use the machine on a roof.
- Never attempt to make any adjustments while the engine is running (except when specifically recommended by manufacturer).
- Stay alert for hidden hazards or traffic.
- After striking a foreign object, shut off the engine, remove the ignition key, thoroughly inspect the machine for any damage, and repair the damage before starting and operating the machine.
- If the machine should start to vibrate abnormally, shut off the engine and check immediately for the cause.
- Do not run the engine indoors, except when starting the engine and for transporting the machine in or out of the building. Open the outside doors; exhaust fumes are dangerous.
- Do not overload the machine capacity by attempting to clear snow at too fast a rate.
- Never touch a hot engine or muffler.
- Thoroughly inspect the electrical cord before plugging it into a power source. If the cord is damaged, do not use it to start the machine. Replace the damaged cord immediately. Unplug the power cord whenever you are not starting the machine.

Freewheeling or Using the Self-Propel Drive

You can operate the snowthrower with the self-propel feature engaged or disengaged (freewheeling).

To freewheel, insert the axle pins through the axle holes, but not through the wheel hubs (Figure 24).

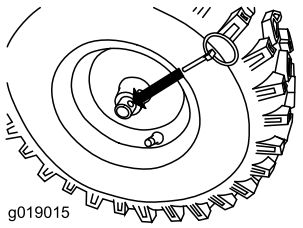

Figure 24

To self-propel, insert the axle pins through the holes in the wheel hubs and the inner-axle holes (Figure 25).

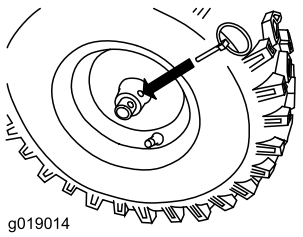

Figure 25

Starting the Engine

1. Check the engine-oil level; refer to 6 Checking the Engine-Oil Level (page 9).
2. Turn the fuel-shutoff valve 1/4 turn counterclockwise to open it (Figure 26).

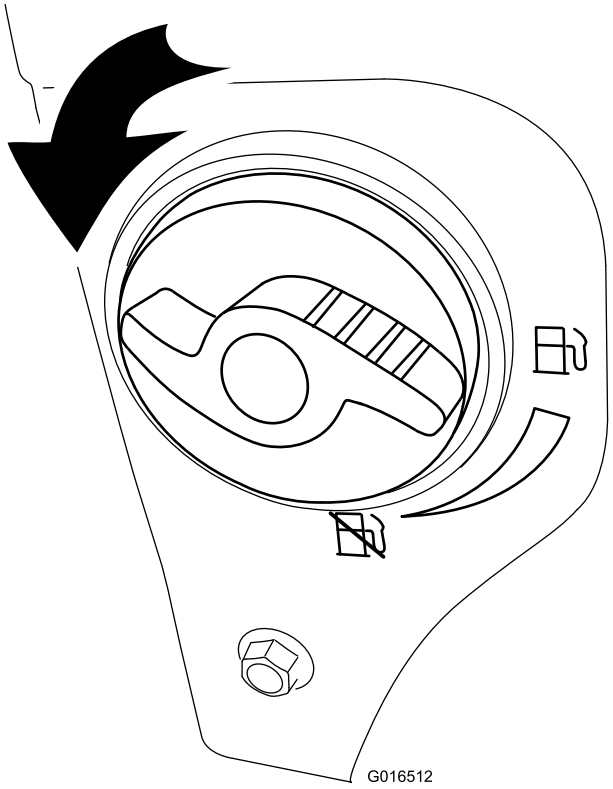

Figure 26

3. Insert the ignition key all the way in (Figure 27).

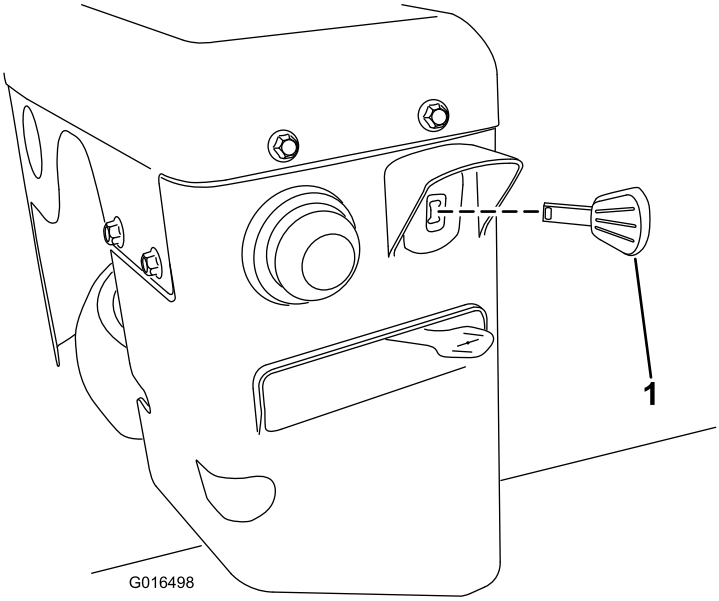

Figure 27

1. Ignition key

4. Firmly push in the primer with your thumb as indicated by the table below, holding the primer in for a second before releasing it each time (Figure 28).

Temperature	Suggested Number of Primes
-23°C (-10°F) and above	3
Below -23°C (-10°F)	6

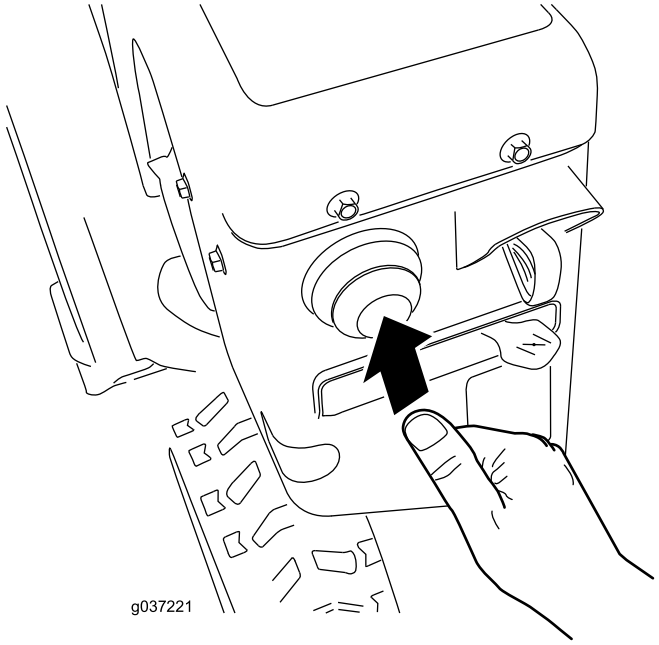

Figure 28

5. Move the choke to the CHOKE position (Figure 29).

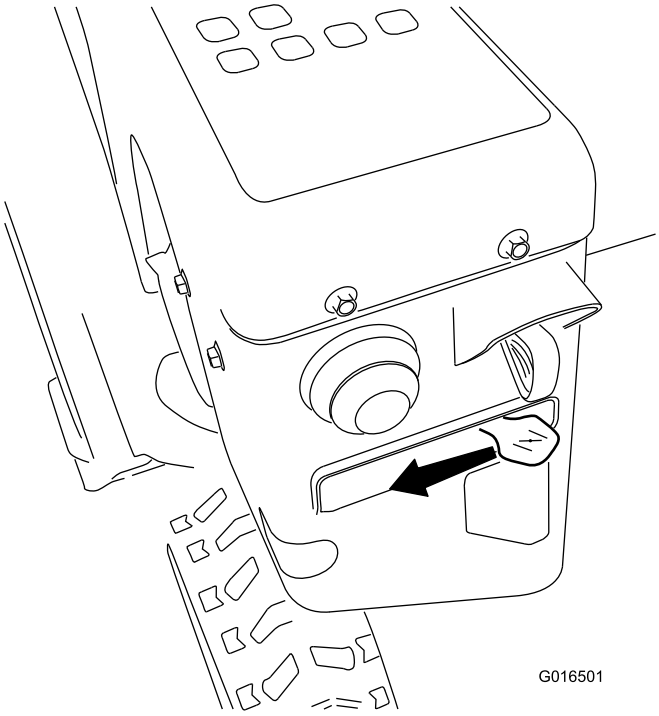

Figure 29

6. Move the throttle to the FAST position (Figure 30).

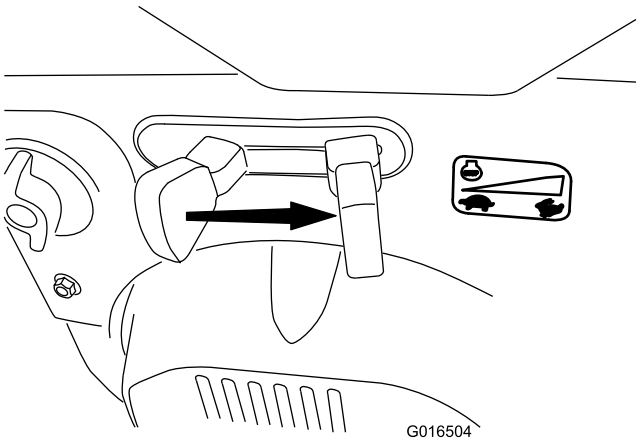

Figure 30

7. Start the machine by pulling the recoil-start handle or pressing the electric-start button (Figure 31).

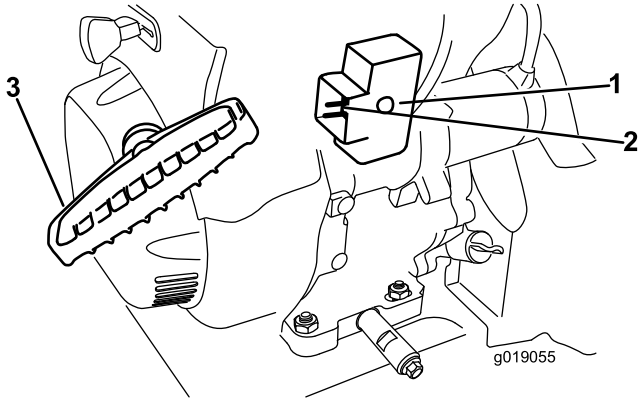

Figure 31

1. Electric-start button
2. Electric-start plug-in
3. Recoil-start handle

To use the electric starter (electric start only), connect a power cord to the electric-start plug-in first and then to a ground fault circuit interrupter (GFCI) power outlet. Use only a UL-listed, 16-gauge power cord recommended for outdoor use that is not longer than 15 m (50 ft).

Important: Do not use a worn or damaged power cord.

⚠ WARNING

The electrical cord can become damaged, causing a shock or fire.

Thoroughly inspect the electrical cord before using the machine. If the cord is damaged, do not operate the machine. Replace or repair the damaged cord immediately. Contact an Authorized Service Dealer for assistance.

Important: To prevent damaging the electric starter, run it in short cycles (5 seconds on, 5 seconds off), no more than 10 times. If the engine still does not start, take the machine to an Authorized Service Dealer for service.

8. Disconnect the power cord from the power outlet first and then from the machine (electric start only).
9. Allow the engine to warm up; gradually move the choke toward the RUN position. Wait for the engine to run smoothly before each choke adjustment.

⚠ CAUTION

If you leave the machine plugged into a power outlet, someone can inadvertently start the machine and injure people or damage property.

Unplug the power cord whenever you are not starting the machine.

Shutting Off the Engine

1. Move the throttle to the SLOW position, and then to the STOP position (Figure 32) to shut off the engine. You can also shut off the engine by pulling the ignition key outward to the middle position.

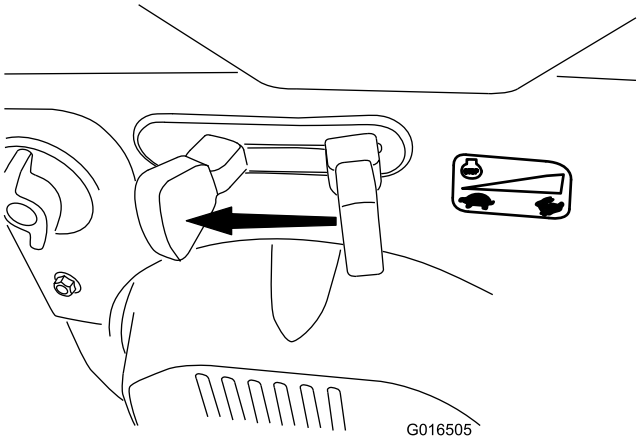

Figure 32

2. Wait for all moving parts to stop before leaving the operating position.
3. Remove the ignition key to prevent accidental starting.
4. Close the fuel-shutoff valve by rotating it clockwise (Figure 33).

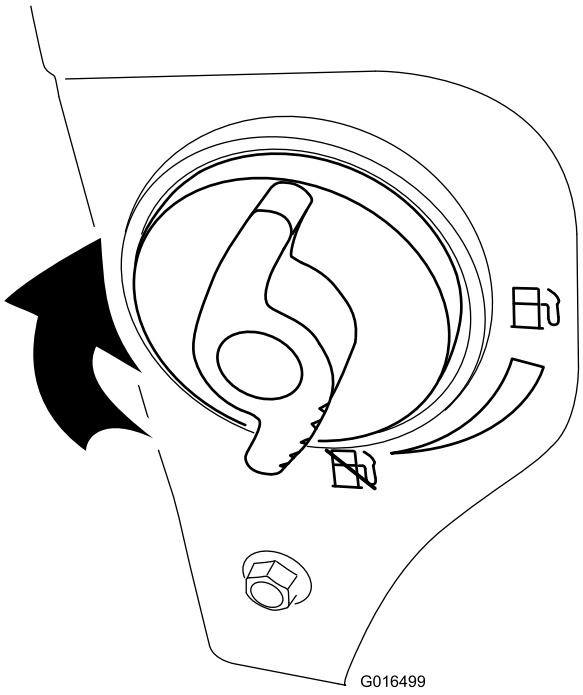

Figure 33

5. Pull the recoil-start handle 3 or 4 times.

   Note: This helps prevent the recoil starter from freezing up.

Operating the Traction Drive

⚠ CAUTION

If the traction drive is not properly adjusted, the machine may move in the direction opposite of what you intended, causing injury and/or property damage.

Carefully check the traction drive and adjust it properly, if necessary; refer to 9 Checking the Operation of the Traction Drive (page 9) for more information.

Important: If the machine moves when the traction lever is in the released position, check the traction cable; refer to Checking and Adjusting the Traction Cable (page 20) or take the machine to an Authorized Service Dealer for service.

Important: To operate the traction drive, you must operate the machine with the self-propel feature engaged. Refer to Freewheeling or Using the Self-Propel Drive (page 12).

1. To engage the traction drive, squeeze the left (traction) lever to the handgrip (Figure 34).

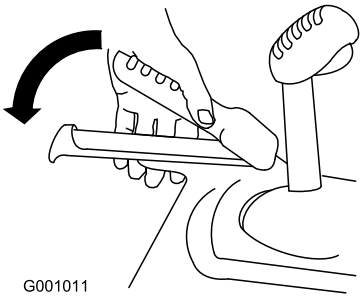

Figure 34

2. To stop the traction drive, release the traction lever.

Using the Wheel-Clutch Levers

The wheel-clutch levers allow you to momentarily disengage the drive to 1 or both wheels with the traction-drive lever still engaged. This enables you to turn and maneuver the machine easily.

Note: Holding down the traction lever against the handle engages the traction drive to both wheels.

To turn the machine to the right, lift up the right wheel-clutch lever and squeeze it toward the handle (Figure 35).

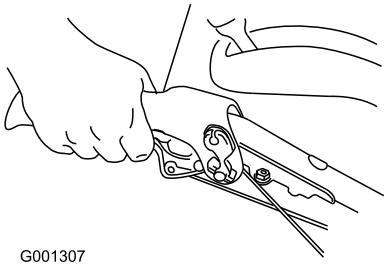

Figure 35

Note: This disengages the drive to the right wheel while the left wheel continues driving, and the machine turns to the right.

Note: Similarly, squeezing the left wheel-clutch lever turns the machine to the left.

When you complete the turn, release the wheel-clutch lever, and the drive re-engages both wheels (Figure 36).

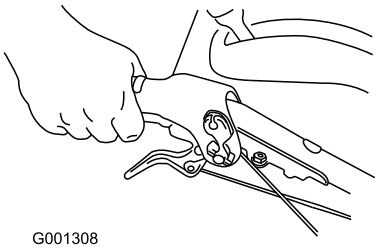

Figure 36

Momentarily squeezing and releasing the left or right wheel-clutch lever also allows for steering adjustments to keep the machine going in a straight line, especially in deep snow.

Squeezing both wheel-clutch levers simultaneously disengages the drive to both wheels. This enables you to manually move the machine backward without stopping to shift it into a reverse gear. It also allows you to maneuver and transport the machine more easily when the engine is not running.

Operating the Speed Selector

The speed selector has 6 forward and 2 reverse gears. To change speeds, release the traction lever and shift the speed-selector lever to the desired position (Figure 37). The lever locks in a notch at each speed selection.

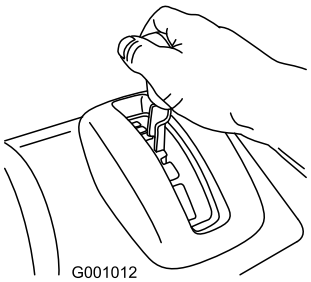

Figure 37

Operating the Auger/Impeller Drive

1. To engage the auger/impeller drive, squeeze the right (auger/impeller) lever to the handgrip (Figure 38).

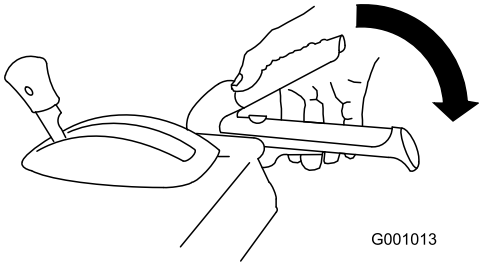

Figure 38

2. To stop the auger and impeller, release the right lever.

   Important: When you engage both the auger/impeller lever and the traction lever, the traction lever locks the auger/impeller lever down, freeing your right hand. To release both levers, simply release the left (traction) lever.

3. If the auger and impeller continue to rotate when you release the auger/impeller lever, do not operate the machine. Check the auger/impeller cable; refer to Checking and Adjusting the Auger/Impeller Cable (page 21) and adjust it if necessary. Otherwise, take the machine to an Authorized Dealer for service.

⚠ WARNING

If the auger and impeller continue to rotate when you release the auger/impeller lever, you could seriously injure yourself or others.

Do not operate the machine. Take it to an Authorized Service Dealer for service.

Operating the Quick Stick®

Hold the blue trigger cap down to use the Quick Stick to move the discharge chute and the chute deflector. Release the trigger cap to lock the discharge chute and chute deflector into position (Figure 39).

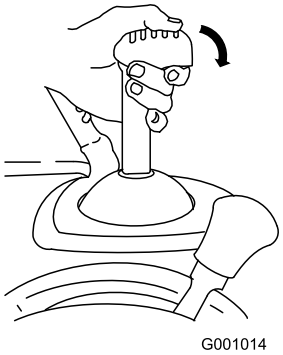

Figure 39

Moving the Discharge Chute

Hold the blue trigger cap down and move the Quick Stick to the left to move the discharge chute to the left; move the Quick Stick to the right to move the discharge chute to the right (Figure 40).

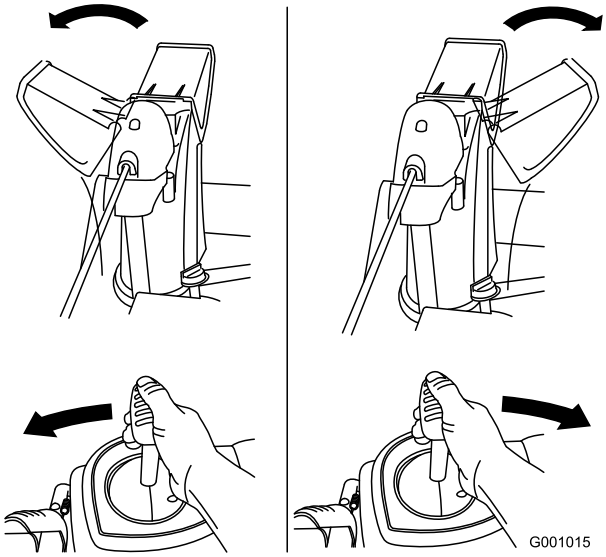

Figure 40

- If the chute does not move, refer to Adjusting the Discharge-Chute Latch (page 24).
- If the chute does not turn as far to the left as it does to the right, ensure that the cable is routed to the inside of the handles. Refer to 1 Installing the Upper Handle (page 5).
- If the chute does not lock into place when you release the trigger cap, refer to Adjusting the Discharge-Chute Latch (page 24).

Moving the Chute Deflector

Hold the blue trigger cap down and move the Quick Stick forward to lower the chute deflector; move it rearward to raise the chute deflector (Figure 41).

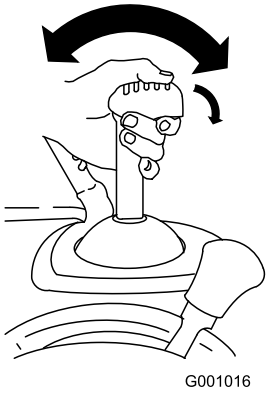

Figure 41

Unclogging the Discharge Chute

⚠ WARNING

If the auger/impeller is running but there is no snow coming out of the discharge chute, the discharge chute may be clogged.

Never use your hands to clear a clogged discharge chute. This could result in personal injury.

- To unclog the discharge chute, stay in the operating position and release the left (traction) lever. While running the auger/impeller, push down on the handles to raise the front of the machine a few centimeters (inches) off the pavement. Then lift the handles quickly to bump the front of the machine on the pavement. Repeat if necessary until a stream of snow comes out the discharge chute.
- If you cannot unclog the discharge chute by bumping the front of the machine, **shut off the engine, wait for all moving parts to stop, and use the snow-cleanout tool; never use your hand.**

Important: Unclogging the discharge chute by bumping the front of the machine on the pavement may cause the skids to move. Adjust the skids and tighten the skid bolts securely.

Operating Tips

⚠ DANGER

When the machine is in operation, the impeller and auger can rotate and cut off or injure hands and feet.

- **Before adjusting, cleaning, inspecting, troubleshooting, or repairing the machine, shut off the engine and wait for all moving parts to stop. Disconnect the wire from the spark plug and keep it away from the plug to prevent someone from accidentally starting the engine.**
- **Remove an obstruction from the discharge chute; refer to Unclogging the Discharge Chute (page 17). If necessary, use the snow-cleanout tool, not your hands, to remove an obstruction from the discharge chute.**
- **Stay behind the handles and away from the discharge opening while operating the machine.**
- **Keep face, hands, feet, and any other part of your body or clothing away from concealed, moving, or rotating parts.**

⚠ WARNING

The impeller can throw stones, toys, and other foreign objects and cause serious personal injury to you or bystanders.

- **Keep the area to be cleared free of all objects that the augers could pick up and throw.**
- **Keep all children and pets away from the area of operation.**

- Always set the throttle to the FAST position when throwing snow.
- If the engine slows down under a load or the wheels slip, shift the machine into a lower gear.
- If the front of the machine rides up, shift the machine into a lower gear. If the front continues to ride up, lift up the handles.

After Operation

Safety

- Never store the machine with fuel in the fuel tank inside a building where ignition sources are present, such as hot water heaters, space heaters, or clothes dryers. Allow the engine to cool before storing in any enclosure.
- When storing the machine for more than 30 days, refer to Storage (page 26) for important details.

Preventing Freeze-up after Use

- In snowy and cold conditions, some controls and moving parts may freeze. **Do not use excessive force when trying to operate frozen controls.** If you have difficulty operating any control or part, start the engine and let it run for a few minutes.
- After using the machine, let the engine run for a few minutes to prevent moving parts from freezing. Engage the auger/impeller to clear any remaining snow from inside the housing. Rotate the Quick Stick to prevent it from freezing. Shut off the engine, wait for all moving parts to stop, and remove all ice and snow from the machine.
- With the engine off, pull the recoil-start handle several times and push the electric-start button once to prevent the recoil starter and electric starter from freezing up.

Maintenance

Note: Determine the left and right sides of the machine from the normal operating position.

Recommended Maintenance Schedule(s)

Maintenance Service Interval	Maintenance Procedure
After the first 2 hours	• Inspect the traction cable and adjust it if necessary. • Inspect the auger/impeller cable and adjust it if necessary.
After the first 5 hours	• Change the engine oil.
Before each use or daily	• Check the engine-oil level and add oil if necessary.
Every 25 hours	• Change the engine oil.
Every 100 hours	• Replace the spark plug.
Yearly	• Check the skids and scraper and adjust them if necessary. • Inspect the traction cable and adjust or replace it if necessary. • Inspect the auger/impeller cable and adjust or replace it if necessary. • Check the auger-gearbox oil and add oil if necessary. • Lubricate the hex shaft.
Yearly or before storage	• Check the air pressure in the tires and inflate them to 116 to 137 kPa (17 to 20 psi). • Run the engine to dry out the fuel tank and the carburetor at the end of the season. • Have an Authorized Service Dealer inspect and replace the traction drive belt and/or the auger/impeller drive belt, if necessary.

Important: You can find more information about maintaining and servicing your machine at www.Toro.com.

Maintenance Safety

Read the following safety precautions before performing any maintenance on the machine:

- Before performing any maintenance, service, or adjustment, shut off the engine and remove the key. If major repairs are ever needed, contact an Authorized Service Dealer.
- Check all fasteners at frequent intervals for proper tightness to ensure that the machine is in safe working condition.
- Maintain or replace safety and instruction labels, as necessary.
- Do not change the governor settings on the engine.
- Purchase only genuine Toro replacement parts and accessories.

Preparing for Maintenance

1. Move the machine to a level surface.
2. Shut off the engine and wait for all moving parts to stop.
3. Disconnect the spark-plug wire. Refer to Replacing the Spark Plug (page 23).

Checking the Engine-Oil Level

Service Interval: Before each use or daily—Check the engine-oil level and add oil if necessary.

1. Remove the dipstick, wipe it clean, then fully install the dipstick.
2. Remove the dipstick and check the oil level (Figure 43). If the oil level is below the Add mark on the dipstick, add oil. Refer to Changing the Engine Oil (page 22).

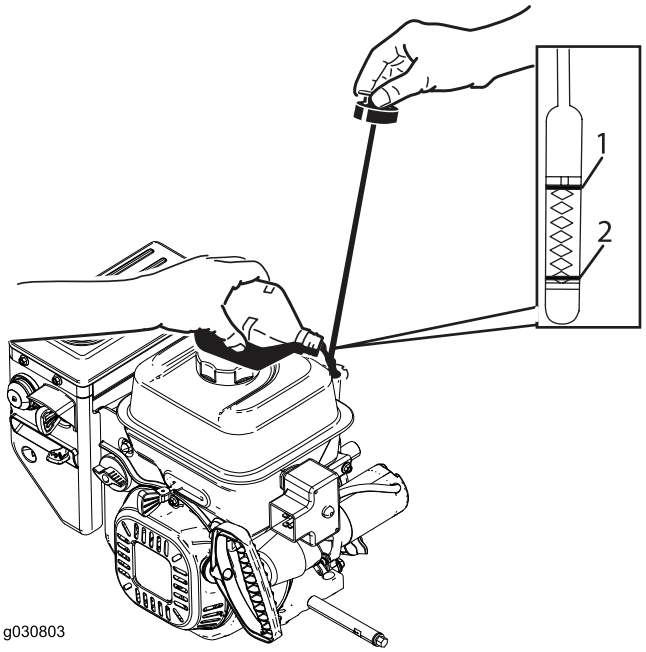

Figure 42

1. Full
2. Add oil

Checking and Adjusting the Skids and Scraper

Service Interval: Yearly—Check the skids and scraper and adjust them if necessary.

Check the skids to ensure that the auger does not contact the paved or gravel surface. Adjust the skids as needed to compensate for wear.

1. Check the tire pressure; refer to 7 Checking the Tire Pressure (page 9).
2. Loosen the nuts that secure both skids to the auger sides until the skids slide up and down easily (Figure 43).

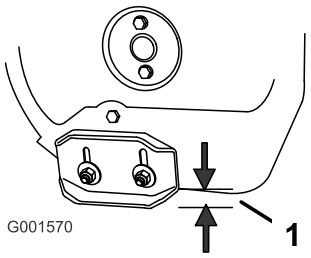

Figure 43

1. 1.3 cm (1/2 inch)

3. Support the side plates so that they are **at least** 1.3 cm (1/2 inch) above a level surface.

   Important: The auger blades must be supported above the ground by the skids.

4. Ensure that the scraper is 3 mm (1/8 inch) above and parallel to a level surface.

   Note: If the pavement is cracked, rough, or uneven, adjust the skids to raise the scraper. For gravel surfaces, adjust the skids further down to prevent the machine from picking up rocks.

5. Move the skids down until they are even with the ground.
6. Firmly tighten the nuts that secure both skids to the auger sides.

   Note: To quickly adjust the skids if they loosen, support the scraper 3 mm (1/8 inch) off the pavement, then adjust the skids down to the pavement.

   Note: If the skids become excessively worn, you can turn them over and set the unused side toward the pavement.

Checking and Adjusting the Traction Cable

Service Interval: After the first 2 hours—Inspect the traction cable and adjust it if necessary.

Yearly—Inspect the traction cable and adjust or replace it if necessary.

If the machine does not drive in the forward or reverse speeds or it drives when you release the traction lever, adjust the traction cable.

With the traction lever disengaged, check the pin in the elongated slot in the left side of the machine above the tire. There should be a gap of 1 to 1.5 mm (1/32 to 1/16 inch) from the front of the slot to the front edge of the pin (Figure 44).

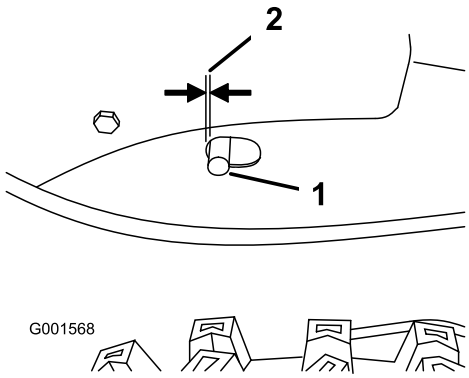

Figure 44

1. Pin
2. 1 to 1.5 mm (1/32 to 1/16 inch)

If the left (traction) cable is not properly adjusted, do the following steps:

1. Loosen the jam nut.
2. Loosen or tighten the turnbuckle to adjust the pin until it is the proper gap from the front edge of the slot.
3. Tighten the jam nut (Figure 45).

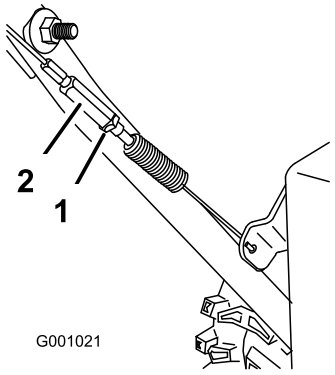

Figure 45

1. Jam nut
2. Turnbuckle

Checking and Adjusting the Auger/Impeller Cable

Service Interval: After the first 2 hours—Inspect the auger/impeller cable and adjust it if necessary.

Yearly—Inspect the auger/impeller cable and adjust or replace it if necessary.

1. Remove the 2 screws from the right side of the belt cover as shown.
2. Lift up the right side of the belt cover (Figure 46).

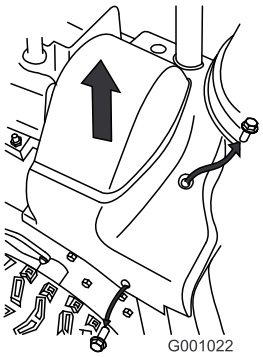

Figure 46

3. With the auger/impeller lever disengaged, ensure that the gap between the auger clutch assembly and the tab is 1.5 mm (1/16 inch) as shown in Figure 47.

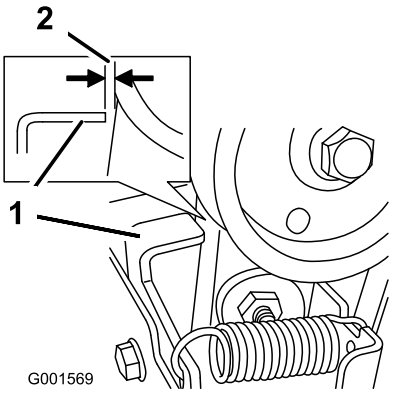

Figure 47

1. Tab
2. 1.5 mm (1/16 inch)

4. If the auger/impeller cable is not properly adjusted, do the following steps:
5. Loosen the jam nut (Figure 48).

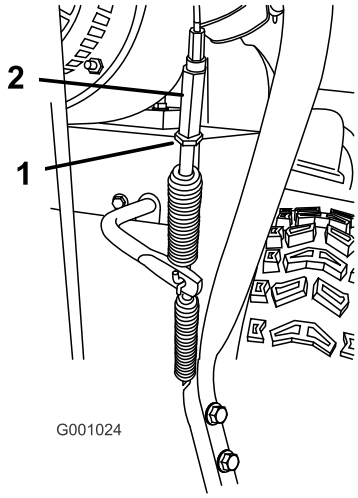

Figure 48

1. Jam nut
2. Turnbuckle

6. Loosen or tighten the turnbuckle that adjusts the tension on the cable (Figure 48).
7. Adjust the turnbuckle until you obtain the proper gap.
8. Tighten the jam nut.
9. Insert the 2 screws that you previously removed on the belt cover.
10. If the auger/impeller cable is properly adjusted but a problem remains, contact an Authorized Service Dealer.

Checking the Auger-Gearbox-Oil Level

Service Interval: Yearly—Check the auger-gearbox oil and add oil if necessary.

1. Move the machine to a level surface.
2. Clean the area around the pipe plug (Figure 49).

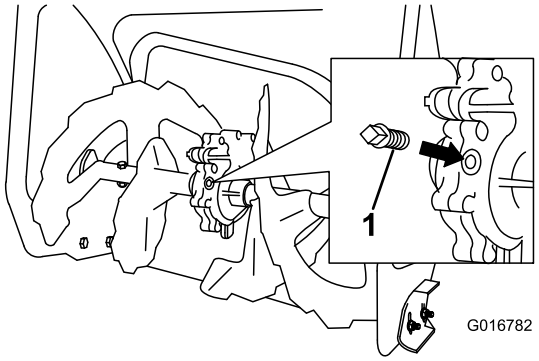

Figure 49

1. Pipe plug

3. Remove the pipe plug from the gearbox.
4. Check the oil level in the gearbox. The oil should be at the point of overflowing at the filler opening.
5. If the oil level is low, add GL-5 or GL-6, SAE 85-95 EP gear oil lubricant to the gearbox until the point of overflow.

   Note: Do not use synthetic oil.
6. Install the pipe plug in the gearbox.

Changing the Engine Oil

Service Interval: After the first 5 hours—Change the engine oil.

Every 25 hours/Yearly (whichever comes first)—Change the engine oil.

If possible, run the engine just before changing the oil because warm oil flows better and carries more contaminants.

Use automotive detergent oil with an API service classification of SF, SG, SH, SJ, SL, or higher.

Use Figure 50 below to select the best oil viscosity for the outdoor temperature range expected:

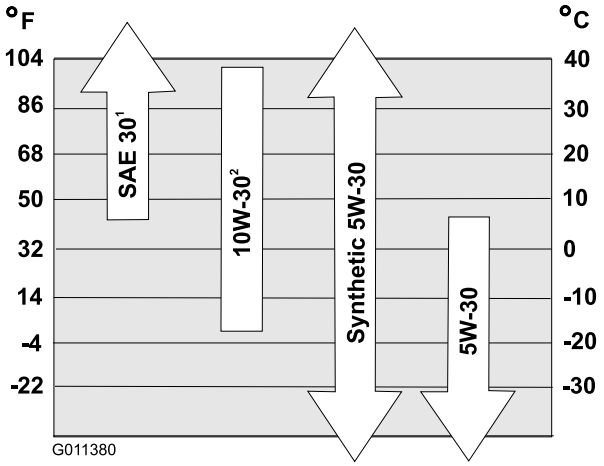

Figure 50

Engine Oil Capacities

Model	Engine Oil Capacity
38805	0.53 to 0.59 L (18 to 20 oz)

1. Clean the area around the oil-drain cap (Figure 51).

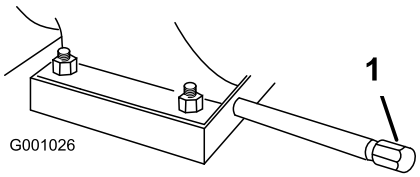

Figure 51

1. Oil-drain cap

2. Slide an oil-drain pan under the drain extension and remove the oil drain cap.
3. Drain the oil.

   Note: Dispose of the used oil properly at a local recycling center.
4. Install the oil-drain cap.
5. Fill the crankcase with oil.

   A. Remove the dipstick and slowly pour oil into the oil-fill tube to raise the oil level to the Full mark on the dipstick (Figure 53). **Do not overfill**.

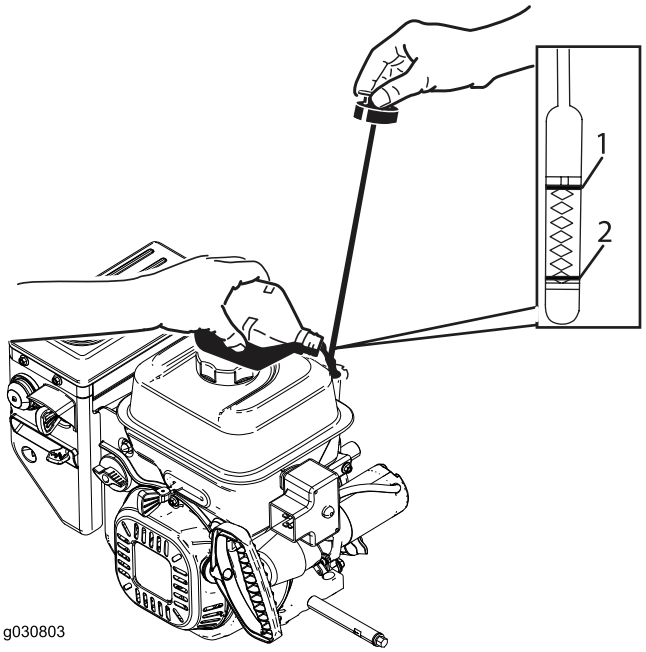

Figure 52

1. Full
2. Add oil

B. Install the dipstick securely.

Note: Do not spill oil around the oil-fill tube; oil could leak onto traction parts and cause the traction to slip.

Lubricating the Hex Shaft

Service Interval: Yearly—Lubricate the hex shaft.

Lightly lubricate the hex shaft yearly with automotive engine oil (Figure 53).

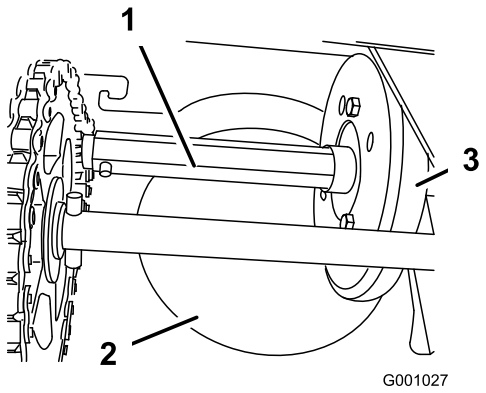

Figure 53

1. Hex shaft
2. Aluminum friction plate
3. Rubber wheel

Important: Do not get oil on the rubber wheel or the aluminum friction drive plate because the traction drive will slip (Figure 53).

1. Drain the fuel from the fuel tank.
2. Tip the machine forward onto its auger housing and block it so that it cannot fall.
3. Remove the back cover (Figure 54).

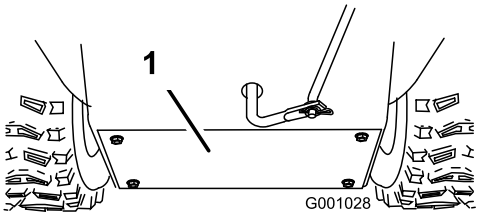

Figure 54

1. Back cover

4. Move the speed-selector lever to Position R2.
5. Dip your finger in automotive engine oil and **lightly** lubricate hex shaft.
6. Move the speed-selector lever to Position 6.
7. Lubricate the other end of the hex shaft.
8. Move the speed-selector lever forward and rearward a few times.
9. Install the back cover and return the machine to the operating position.

Replacing the Spark Plug

Service Interval: Every 100 hours—Replace the spark plug.

⚠ WARNING

Replacing the spark plug while the engine is hot can result in burns.

Wait until the engine is cool to replace the spark plug.

Use a Toro spark plug or equivalent (Champion® RN9YC or NGK BPR6ES).

1. Remove the boot (Figure 55).

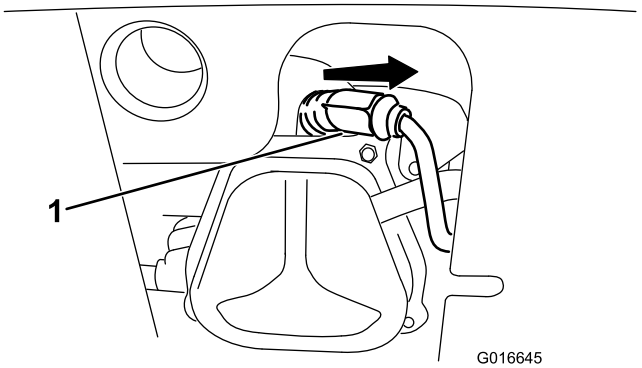

Figure 55

1. Spark-plug boot

2. Clean around the base of the spark plug.

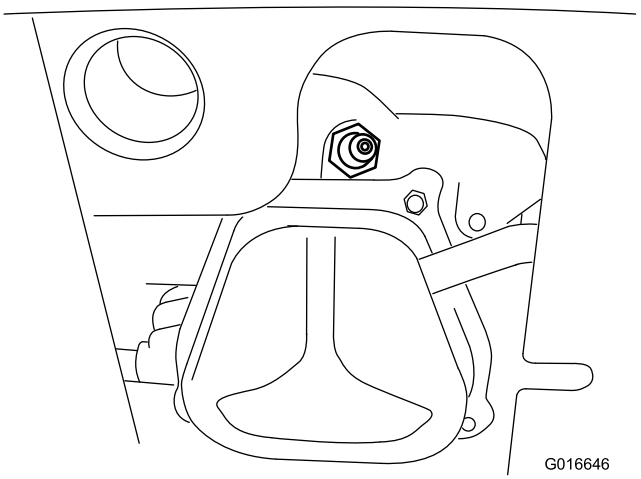

Figure 56

3. Remove and discard the old spark plug.

   Note: You will need a ratchet wrench extension to remove the spark plug.

4. Set the gap between the electrodes on a new spark plug at 0.76 mm (0.030 inch) as shown in Figure 57.

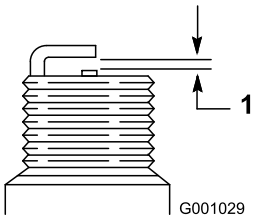

Figure 57

1. 0.76 mm (0.030 inch)

5. Install the new spark plug, tighten it firmly, and attach the ignition wire to the spark plug.

   Note: Ensure the ignition wire snaps completely into place on the spark plug.

Adjusting the Discharge-Chute Latch

If the discharge chute does not lock into the desired position or does not unlock so that you can move it to another position, adjust the discharge-chute latch.

1. Remove the fastener on the gear cover (Figure 58), lift the front of the cover up, and slide it back and out of the way.

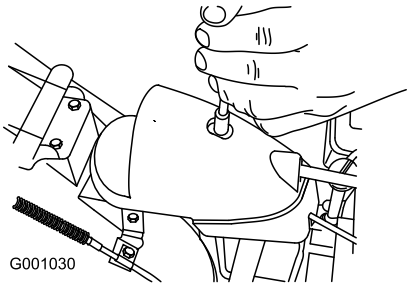

Figure 58

2. Loosen the bolt on the cable clamp (Figure 59).

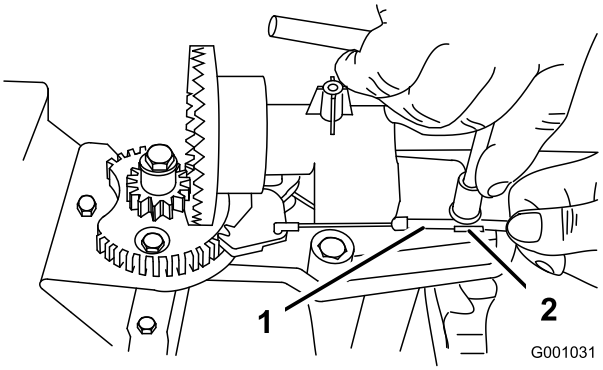

Figure 59

1. Cable conduit
2. Cable clamp

3. Grasp the cable conduit and move it toward the front of the machine until the discharge-chute latch fully engages the gear teeth (Figure 59 and Figure 60).

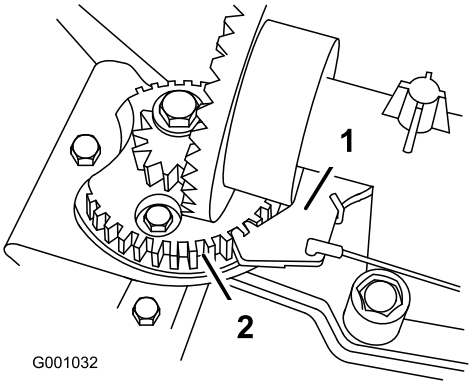

Figure 60

1. Discharge-chute latch
2. Gear teeth

   Note: The latch is spring loaded and naturally moves into the teeth of the gear (Figure 60).

4. Remove any slack in the cable by pulling the cable conduit rearward.
5. Tighten the bolt on the cable clamp, being careful not to strip the plastic part.
6. Install and secure the gear cover.

Replacing the Drive Belts

If the auger/impeller drive belt or the traction drive belt becomes worn, oil-soaked, or otherwise damaged, have an Authorized Service Dealer replace the belt.

Replacing the Headlight Bulb

Use a **GE 899 37W halogen light bulb.** Do not touch the bulb with your hands or allow dirt or moisture to come into contact with the bulb.

1. Remove the wire connector from the back of the headlight (Figure 61).

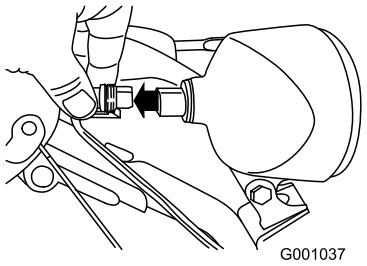

Figure 61

2. Turn the base of the bulb counterclockwise until it stops (Figure 62).

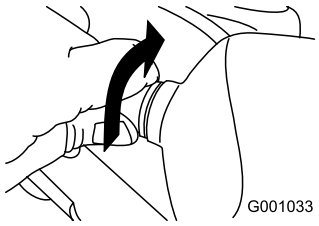

Figure 62

3. Remove the bulb straight out from the back of the headlight (Figure 63).

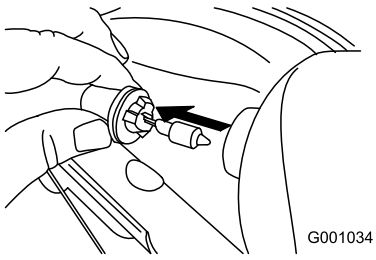

Figure 63

4. Insert a new bulb into the back of the headlight (Figure 64).

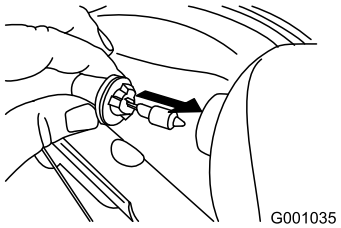

Figure 64

5. Turn the base of the bulb clockwise until it is snug (Figure 65).

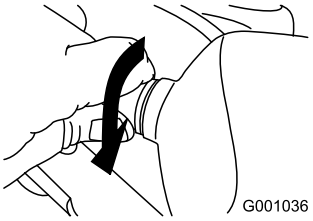

Figure 65

6. Insert the wire connector straight into the back of the headlight until it is securely in place (Figure 66).

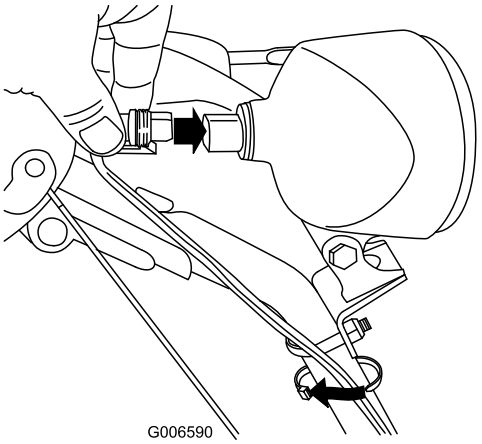

Figure 66

Storage

⚠ WARNING

- **Fuel vapors can explode.**
- **Do not store fuel more than 30 days.**
- **Do not store the machine in an enclosure near an open flame.**
- **Allow the engine to cool before storing it.**

Preparing the Machine for Storage

1. On the last refueling of the year, add fuel stabilizer to fresh fuel.

   Note: Fuel should not be stored longer than suggested by the fuel-stabilizer manufacturer.
2. Run the engine for 10 minutes to distribute the conditioned fuel through the fuel system.
3. Run the machine until the engine runs out of fuel.
4. Prime the engine and start it again.
5. Allow the engine to run until it shuts off. When you can no longer start the engine, it is sufficiently dry.
6. Shut off the engine and allow it to cool.
7. Remove the ignition key.
8. Clean the machine thoroughly.
9. Touch up chipped surfaces with paint available from an Authorized Service Dealer. Sand affected areas before painting, and use a rust preventative to prevent the metal parts from rusting.
10. Tighten all loose screws, bolts, and locknuts. Repair or replace any damaged parts.
11. Cover the machine and store it in a clean, dry place out of the reach of children.

Removing the Machine from Storage

Perform the annual maintenance procedures as given in the Recommended Maintenance Schedule; refer to Maintenance (page 19).

Troubleshooting

Problem	Possible Cause	Corrective Action
The electric starter does not turn (electric start only).	1. The power cord is disconnected at the outlet or the machine. 2. The power cord is worn, corroded, or damaged. 3. The power outlet is not energized.	1. Connect the power cord to the outlet and/or the machine. 2. Replace the power cord. 3. Have a qualified electrician energize the outlet.
The engine does not start or starts hard.	1. The key is not in the ignition or is in the STOP position. 2. The choke is in the OFF position and the primer has not been pressed. 3. The fuel-shutoff valve is not open. 4. The throttle is not in the FAST position. 5. The fuel tank is empty or the fuel system contains stale fuel. 6. The spark-plug wire is loose or disconnected. 7. The spark plug is pitted, fouled, or the gap is incorrect. 8. The fuel-vent cap is restricted. 9. The engine-oil level in the engine crankcase is too low or too high.	1. Insert the key into the ignition and turn it to the ON position. 2. Move the choke to the ON position and press the primer 3 times. 3. Open the fuel-shutoff valve. 4. Move the throttle to the FAST position. 5. Drain and/or fill the fuel tank with fresh fuel (not more than 30 days old). If the problem persists, contact an Authorized Service Dealer. 6. Connect the wire to the spark plug. 7. Check the spark plug and adjust the gap if necessary. Replace the spark plug if it is pitted, fouled, or cracked. 8. Remove the vent restriction or replace the fuel cap. 9. Add or drain oil to adjust the oil level in the engine crankcase to the Full mark on the dipstick.
The engine runs rough.	1. The choke is in the ON position. 2. The fuel-shutoff valve is not completely open. 3. The fuel tank is nearly empty or contains stale fuel. 4. The spark-plug wire is loose. 5. The spark plug is pitted, fouled, or the gap is incorrect. 6. The engine-oil level in the engine crankcase is too low or too high.	1. Move the choke to the OFF position. 2. Open the fuel-shutoff valve. 3. Drain and fill the fuel tank with fresh fuel (not more than 30 days old). If the problem persists, contact an Authorized Service Dealer. 4. Connect the wire to the spark plug. 5. Check the spark plug and adjust the gap if necessary. Replace the spark plug if it is pitted, fouled, or cracked. 6. Add or drain oil to adjust the oil level in the engine crankcase to the Full mark on the dipstick.

Problem	Possible Cause	Corrective Action
The engine runs, but the machine discharges snow poorly or not at all.	1. The throttle is not in the FAST position when throwing snow.	1. Move the throttle to the FAST position.
	2. The machine is moving too fast to clear the snow.	2. Shift the machine into a lower gear.
	3. You are trying to remove too much snow per swath.	3. Reduce the amount of snow removed per swath.
	4. You are trying to remove extremely heavy or wet snow.	4. Don't overload the machine with extremely heavy or wet snow.
	5. The discharge chute is plugged.	5. Unclog the discharge chute.
	6. The auger/impeller drive belt is loose or is off the pulley.	6. Install and/or adjust the auger/impeller drive belt; refer to www.Toro.com for servicing information or take the machine to an Authorized Service Dealer.
	7. The auger/impeller drive belt is worn or broken.	7. Replace the auger/impeller drive belt; refer to www.Toro.com for servicing information or take the machine to an Authorized Service Dealer.
The discharge chute either does not lock into place or does not move.	1. The discharge-chute latch is not properly adjusted.	1. Adjust the discharge-chute latch.
The machine does not properly clear the snow off the surface.	1. The skids and/or scraper are not properly adjusted.	1. Adjust the skids and/or the scraper.
	2. The pressure in the tires is not equal.	2. Check and adjust the pressure in one or both tires.

Notes:

Emission Control Warranty Statement

For the United States, California, and Canada

374-0320

Your Warranty Rights and Obligations

The California Air Resources Board (CARB), the U.S. Environmental Protection Agency (EPA), and The Toro Company, are pleased to explain the emission control system warranty on your 2017–2018 small off-road engine/equipment. In California and the United States, new small off-road engines/equipment must be designed, built, and certified to meet stringent anti-smog standards. The Toro Company warrants the emission control system on your small off-road engine/equipment for the period of time listed below, provided there has been no abuse, neglect, or improper maintenance of your small off-road engine/equipment.

Your emission control system may include parts such as the carburetor, fuel-injection system, the ignition system, catalytic converter, fuel tanks, fuel lines, fuel caps, valves, canisters, filters, vapor hoses, clamps, connectors, and other associated emission-related components.

Where a warrantable condition exists, The Toro Company will repair your small off-road engine/equipment at no cost to you including diagnosis, parts and labor.

Manufacturer's Warranty Coverage

This emission control system is warranted for two years or the duration of The Toro Warranty, whichever is longer. If any emission-related part on your engine/equipment is defective, the part will be repaired or replaced by The Toro Company.

Owner Responsibilities

As the small off-road engine owner, you are responsible for the performance of the required maintenance listed in your *Operator's Manual*. We recommend that you retain all receipts covering maintenance on your small off-road engine/equipment, but we cannot deny warranty solely for the lack of receipts.

As the small off-road engine/equipment owner, you should however be aware that we may deny you warranty coverage if your small off-road engine/equipment or a part has failed due to abuse, neglect, improper maintenance or unapproved modifications.

You are responsible for presenting your small off-road engine/equipment to a Toro Distribution Center or Service Center as soon as a problem exists. The warranty repairs should be completed in a reasonable amount of time, not to exceed thirty (30) days.

If you have any questions regarding your warranty coverage, contact us at:

Customer Care Department, Consumer Division
Toro Warranty Company
8111 Lyndale Avenue South
Bloomington, MN 55420-1196
1-888-384-9939 (U.S. and Canadian customers)
email Customer Support at: www.toro.com

General Emissions Warranty Coverage

The Toro Company warrants to the ultimate purchaser and each subsequent purchaser that the small off-road engine/equipment is:

- Designed, built, and certified to conform with all applicable emissions regulations; and
- Free from defects in materials and workmanship that could cause the failure of a warranted part; and
- Identical in all material respects to the parts as described in the application for certification.

The warranty period begins on the date the small off-road engine/equipment is delivered to an ultimate purchaser. The warranted period is two years or the duration of The Toro Warranty, whichever is longer.

Subject to certain conditions and exclusions as stated below, the warranty on evaporative emissions-related parts is as follows:

1. Any warranted part that is not scheduled for replacement as required maintenance in the written instructions supplied, is warranted for the warranty period stated above. If the part fails during the period of warranty coverage, the part will be repaired or replaced by The Toro Company. Any such part repaired or replaced under warranty will be warranted for the remainder of the warranty period.
2. Any warranted part that is scheduled only for regular inspection in the written instructions supplied is warranted for the warranty period stated above. Any such part repaired or replaced under the warranty will be warranted for the remainder of the warranty period.
3. Any warranted part that is scheduled for replacement as required maintenance in the written instructions supplied is warranted for the period of time before the first scheduled replacement date for that part. If the part fails before the first scheduled replacement, the part will be repaired or replaced by The Toro Company. Any such part repaired or replaced under warranty will be warranted for the remainder of the period prior to the first scheduled replacement point for the part.
4. Repair or replacement of any warranted part under the warranty provisions herein must be performed at an Authorized Service Dealer at no charge to the owner.
5. Warranty services or repairs will be provided at all Service Dealers authorized to service the subject engines or equipment.
6. The small off-road engine/equipment owner will not be charged for diagnostic labor that is directly associated with diagnosis of a defective, emission-related warranted part, provided that such diagnostic work is performed at an Authorized Service Dealer.
7. The Toro Company is liable for damages to other engine/equipment components caused by a failure under warranty of any warranted part.
8. Throughout the small off-road engine/equipment warranty period stated above, The Toro Company will maintain a supply of warranted parts sufficient to meet the expected demand for such parts.
9. Manufacturer approved replacement parts may be used in the performance of any warranty maintenance or repairs and must be provided without charge to the owner. Such use will not reduce the warranty obligations of The Toro Company.
10. Add-on or modified parts that are not approved by The Toro Company may not be used. The use of a non-approved add-on or modified parts by the purchaser will be grounds for disallowing a warranty claim. The Toro Company will not be liable to warrant failures of warranted parts caused by the use of an non-approved add-on or modified parts.

Warranted Parts

The following emission warranty parts are covered, to the extent these parts were present on the Toro engine/equipment and/or Toro supplied fuel system:

1. Fuel System Parts
   - Carburetor and internal parts
   - Cold starting enrichment (primer or choke)
   - Fuel pump
   - Fuel line, fittings, and clamps
   - Fuel tank, cap, and tether
   - Carbon canister
2. Air Induction System
   - Air cleaner
   - Intake manifold
   - Crankcase vent and line(s)
   - Purge line and fittings
3. Ignition System
   - Spark plug(s) and wire(s)
   - Magneto ignition system
4. Catalytic Exhaust System
   - Catalytic converter
   - Exhaust manifold
   - Air injector system and valve(s)
5. Miscellaneous Items Used in Emission Control System
   - Valves, switches, and linkages
   - Connectors, fittings, and brackets

The Toro Warranty

A Three-Year Limited Warranty (45 Day Limited Warranty for Commercial Use)

SnowMaster
Power Max

Conditions and Products Covered

The Toro Company and its affiliate, Toro Warranty Company, pursuant to an agreement between them, jointly promise to repair the Toro Product listed below if used for residential purposes*, if defective in materials or workmanship or if it stops functioning due to the failure of a component for the period listed below.

This warranty covers the cost of parts and labor, but you must pay transportation costs.

The following time periods apply from the original date of purchase:

Products	Warranty Period
SnowMaster and Power Max Snowthrowers and Attachments	3 years
— Chute	Lifetime (original owner only)
— Deflector	Lifetime (original owner only)
— SnowMaster Lower Chute	Lifetime (original owner only)
— Power Max Anti-Clogging System (Plastic impeller housing cover)	Lifetime (original owner only)

Limited Warranty for Commercial Use

Gas-powered Toro Products used for commercial, institutional, or rental use, are warranted for 45 days against defects in materials or workmanship. Components failing due to normal wear are not covered by this warranty.

Instructions for Obtaining Warranty Service

If you think that your Toro Product contains a defect in materials or workmanship, follow this procedure:

1. Contact any Authorized Toro Service Dealer to arrange service at their dealership. To locate a dealer convenient to you, refer to the *Yellow Pages* of your telephone directory (look under “Lawn Mowers”) or access our web site at www.Toro.com. You may also call the numbers listed in item #3 to use the 24-hour Toro Dealer locator system.
2. Bring the product and your proof of purchase (sales receipt) to the Service Dealer. The dealer will diagnose the problem and determine if it is covered under warranty.
3. If for any reason you are dissatisfied with the Service Dealer’s analysis or with the assistance provided, contact us at:

   Toro Warranty Company
   Customer Care Department, RLC Division
   8111 Lyndale Avenue South
   Bloomington, MN 55420-1196
   Toll free at 866-336-5205 (U.S. customers)
   Toll free at 866-854-9033 (Canadian customers)

Owner Responsibilities

You must maintain your Toro Product by following the maintenance procedures described in the *Operator's Manual*. Such routine maintenance, whether performed by a dealer or by you, is at your expense.

Items and Conditions Not Covered

There is no other express warranty except for special emission system coverage and engine warranty coverage on some products. This express warranty does not cover the following:

- Cost of regular maintenance service or replacement of wear parts, such as blades, rotor blades (paddles), scraper blades, belts, fuel, lubricants, oil changes, spark plugs, light bulbs, cable/linkage or brake adjustments
- Any product or part which has been altered or misused or neglected or requires replacement or repair due to accidents or lack of proper maintenance
- Pickup and delivery charges
- Operational misuse, neglect, or accidents
- Repairs or attempted repairs by anyone other than an Authorized Toro Service Dealer
- Repairs necessary due to failure to follow recommended fuel procedure (consult *Operator's Manual* for more details)
  - Removing contaminants from the fuel system is not covered
  - Use of old fuel (more than one month old) or fuel which contains more than 10% ethanol or more that 15% MTBE
  - Failure to drain the fuel system prior to any period of non-use over one month

General Conditions

All repairs covered by these warranties must be performed by an Authorized Toro Service Dealer using Toro approved replacement parts. Repair by an Authorized Toro Service Dealer is your sole remedy under this warranty.

Neither The Toro Company nor Toro Warranty Company is liable for indirect, incidental, or consequential damages in connection with the use of the Toro Products covered by these warranties, including any cost or expense of providing substitute equipment or service during reasonable periods of malfunction or non-use pending completion of repairs under these warranties.

All implied warranties of merchantability (that the product is fit for ordinary use) and fitness for use (that the product is fit for a particular purpose) are limited to the duration of the express warranty.

Some states do not allow exclusions of incidental or consequential damages, or limitations on how long an implied warranty lasts, so the above exclusions may not apply to you.

This warranty gives you specific legal rights, and you may also have other rights which vary from state to state.

Countries Other than the United States or Canada

Customers who have purchased Toro products exported from the United States or Canada should contact their Toro Distributor (Dealer) to obtain guarantee policies for your country, province, or state. If for any reason you are dissatisfied with your Distributor's service or have difficulty obtaining guarantee information, contact the Toro importer. If all other remedies fail, you may contact us at Toro Warranty Company.

Australian Consumer Law

Australian customers will find details relating to the Australian Consumer Law either inside the box or at your local Toro Dealer.

*Residential purposes means use of the product on the same lot as your home. Use at more than one location, or institutional or rental use, is considered commercial use, and the commercial use warranty would apply.