Form No. 3406-827 Rev A

Pump Service Kit

Multi Pro® 1750, 5800, WM Turf Sprayers

Model No. 136-2253

Model No. 136-2254

Installation Instructions

Installation

Loose Parts

Use the chart below to verify that all parts have been shipped.

Procedure	Description	Qty.	Use
1	No parts required	–	Prepare the machine.
2	No parts required	–	Note the position of the fittings.
3	Pump	1	Assemble the Kit Sprayer Pump.
	Fitting 31.8 mm (1-1/4 inches)	1	
	O-ring—38 x 46 mm (1-1/2 x 1-13/16 inches)	1	
	Retainer—84 x 48 mm (3-5/16 x 1-7/8 inches)	1	
	Fitting 38.1 mm (1-1/2 inches)	1	
	O-ring—45 x 53 mm (1-3/4 x 2-3/32 inches)	1	
	Retainer—106.5 x 73 mm (4-3/16 x 2-7/8 inches)	1	

Note: Refer to the *Service Manual* for information on removing and installing the sprayer pump.

1

Preparing the Machine

No Parts Required

Procedure

1. Move the machine to a level surface (A and B of Figure 1).

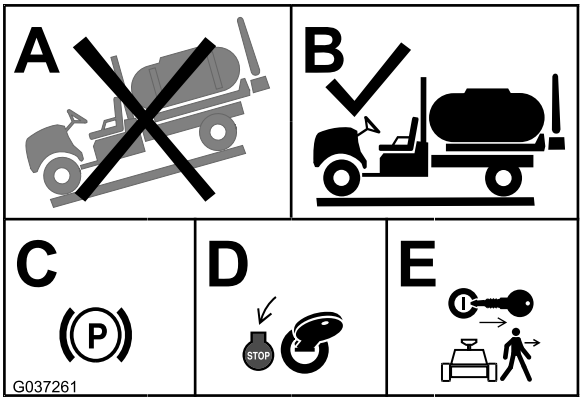

Figure 1

2. Set the parking brake (C of Figure 1).
3. Shut off the engine (D of Figure 1).
4. Remove the key from the key switch (E of Figure 1).

© 2016—The Toro® Company
8111 Lyndale Avenue South
Bloomington, MN 55420

Register at www.Toro.com.

CE

Original Instructions (EN)
Printed in the USA
All Rights Reserved

3406-827 A

2

Noting the Position of the Sprayer-Pump Fittings

No Parts Required

Procedure

1. With the old sprayer pump removed from the machine, note the position of the retainer and retainer sockets of the pressure-port fitting; refer to Figure 2 or Figure 3.

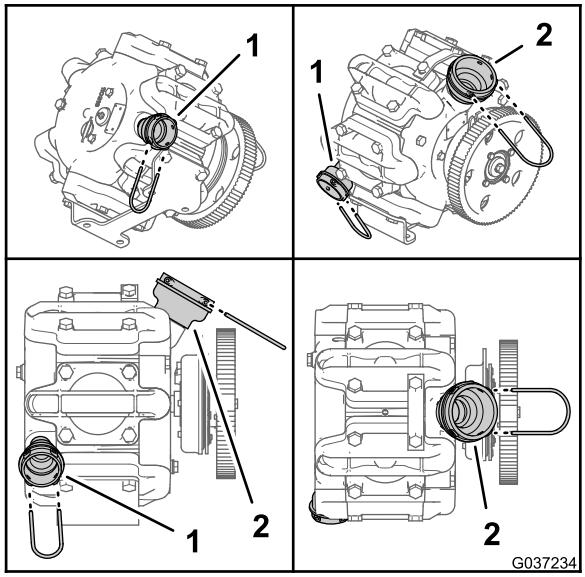

Figure 2
Multi Pro 1750 Machines

1. Pressure-port fitting
2. Supply-port fitting

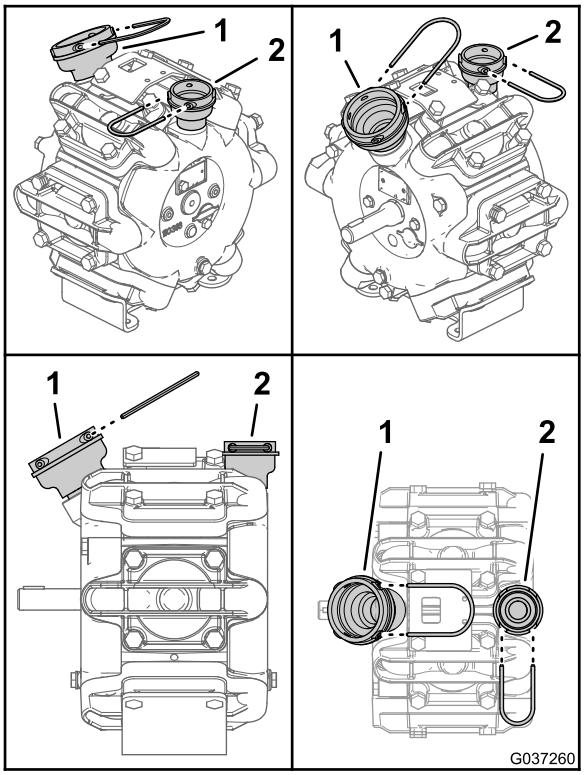

Figure 3
Multi Pro 5800 and Multi Pro WM Machines

1. Supply-port fitting
2. Pressure-port fitting

2. Note the position of the retainer and retainer sockets of the supply-port fitting; refer to Figure 2 or Figure 3.

3

Assembling the Kit Sprayer Pump

Parts needed for this procedure:

1	Pump
1	Fitting 31.8 mm (1-1/4 inches)
1	O-ring—38 x 46 mm (1-1/2 x 1-13/16 inches)
1	Retainer—84 x 48 mm (3-5/16 x 1-7/8 inches)
1	Fitting 38.1 mm (1-1/2 inches)
1	O-ring—45 x 53 mm (1-3/4 x 2-3/32 inches)
1	Retainer—106.5 x 73 mm (4-3/16 x 2-7/8 inches)

Assembling the Pump

1. Lubricate the O-ring 45 x 53 mm (1-3/4 x 2-3/32 inches) and O-ring 38 x 46 mm (1-1/2 x 1-13/16 inches) with silicone grease or vegetable oil.

   Important: Do not use petroleum base grease or oil to lubricate the O-rings.

2. Assemble the O-ring 38 x 46 mm (1-1/2 x 1-13/16 inches) onto the fitting 31.8 mm (1-1/4 inches) as shown in Figure 4.

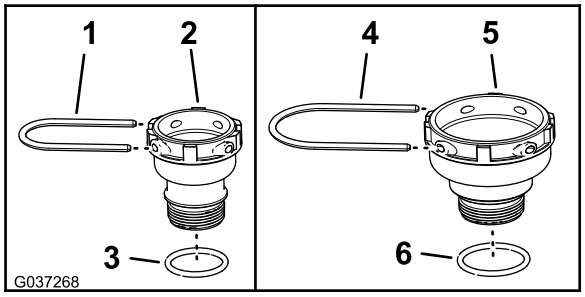

Figure 4

1. Retainer—84 x 48 mm (3-5/16 x 1-7/8 inches)
2. Fitting 31.8 mm (1-1/4 inches)
3. O-ring 38 x 46 mm (1-1/2 x 1-13/16 inches)
4. Retainer—106.5 x 73 mm (4-3/16 x 2-7/8 inches)
5. Fitting 38.1 mm (1-1/2 inches)
6. O-ring 45 x 53 mm (1-3/4 x 2-3/32 inches)

3. Assemble the O-ring 45 x 53 mm (1-3/4 x 2-3/32 inches) onto the fitting 38.1 mm (1-1/2 inches) as shown in Figure 4.
4. Assemble fitting 31.8 mm (1-1/4 inches) into the pressure port of the pump (Figure 5 or Figure 6).

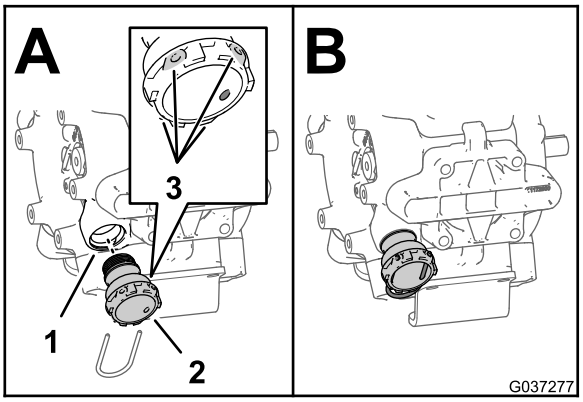

Figure 5

Multi Pro 1750

1. Pressure port
2. Fitting 31.8 mm (1-1/4 inches)
3. Retainer socket

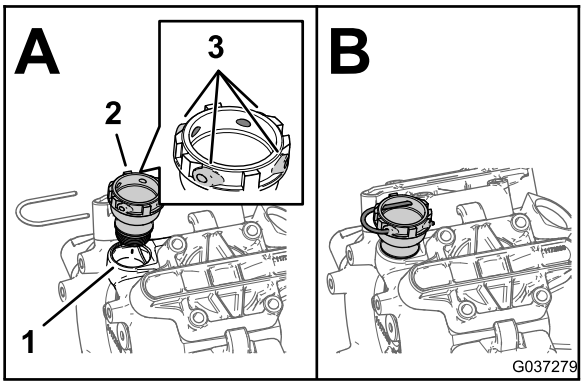

Figure 6

Multi Pro 5800 and Multi Pro WM

1. Pressure port
2. Fitting 31.8 mm (1-1/4 inches)
3. Retainer socket

5. Tighten the fitting by hand until the retainer sockets are aligned the same as you noted of the old pump in step 2 of 2 Noting the Position of the Sprayer-Pump Fittings (page 1); refer to Figure 2 or Figure 3.
6. Assemble fitting 38.1 mm (1-1/2 inches) into the return port of the pump (Figure 7 or Figure 8).

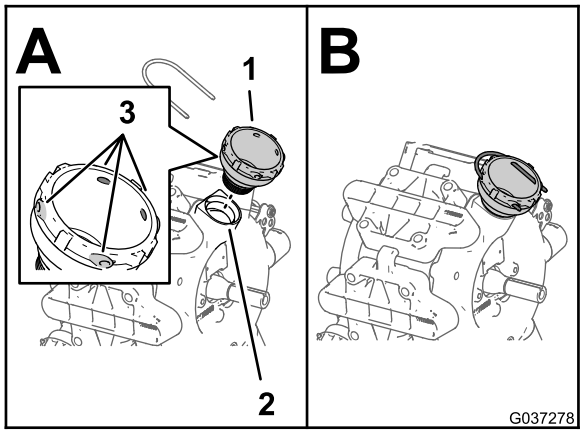

Figure 7

Multi Pro 1750

1. Fitting 38.1 mm (1-1/2 inches)
2. Supply port
3. Retainer socket

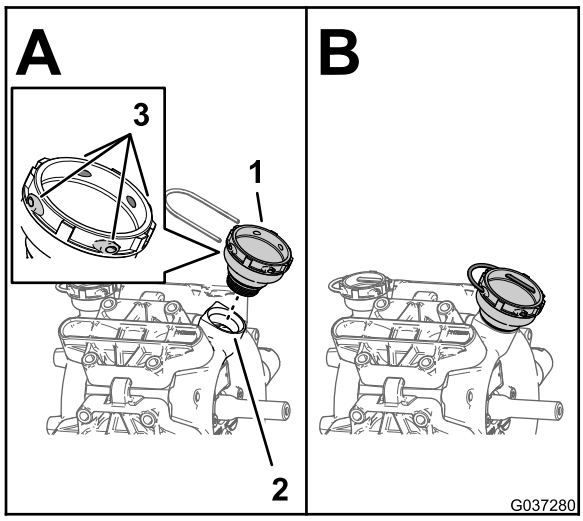

Figure 8

Multi Pro 5800 and Multi Pro WM

1. Fitting 38.1 mm (1-1/2 inches)
2. Supply port
3. Retainer socket

7. Tighten the fitting by hand until the retainer sockets are aligned the same as you noted of the old pump in step 1 of 2 Noting the Position of the Sprayer-Pump Fittings (page 1); refer to Figure 2 or Figure 3.