Form No. 3406-911 Rev A

Auxiliary Power Unit

Groundsmaster® 3320/3280-D and 7200/7210 Traction Units

Model No. 30382

Installation Instructions

Loose Parts

Use the chart below to verify that all parts have been shipped.

Procedure	Description	Qty.	Use
1	No parts required	–	Prepare the machine.
2	Power relay Locknut Screw Fuse block Ground block terminal Jumper strip Power point Cap	1 5 5 1 1 1 1 1	Install the power unit.
3	Wire harness (3 connections) Wire harness (7 connections) Fuse (10 A)	1 1 1	Route the wire harness.

1

Preparing the Machine

No Parts Required

Procedure

1. Move the machine to a level surface (box A of Figure 1).
2. Engage the parking brake (box B of Figure 1).
3. Remove the key from the ignition switch (box C of Figure 1).
4. Remove the negative battery cable from the battery (box D of Figure 1).

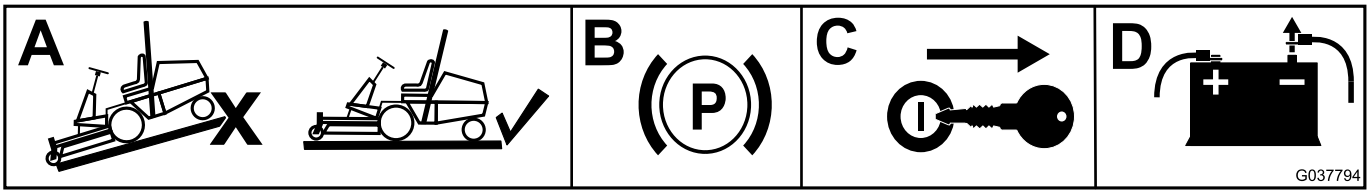

Figure 1

© 2016—The Toro® Company
8111 Lyndale Avenue South
Bloomington, MN 55420

Register at www.Toro.com.

CE

Original Instructions (EN)
Printed in the USA
All Rights Reserved

3406-911 A

2

Installing the Power Unit

Parts needed for this procedure:

1	Power relay
5	Locknut
5	Screw
1	Fuse block
1	Ground block terminal
1	Jumper strip
1	Power point
1	Cap

For a Groundsmaster 3320/3280-D Machine

1. Remove the 4 thumbscrews securing the control-panel plate to the machine (Figure 2).

   Note: The mounting holes required for the installation of the components are already in the control-panel compartment.

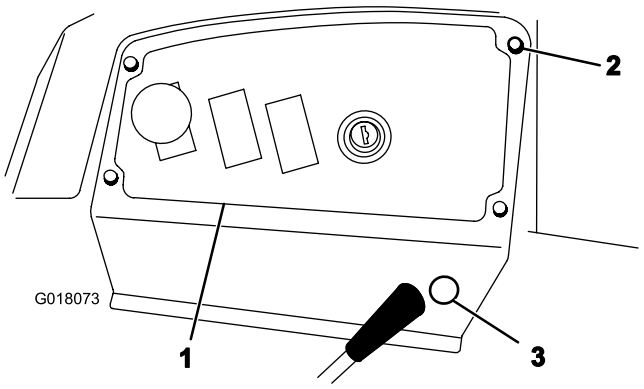

Figure 2

1. Control-panel plate
2. Thumbscrew
3. Knock-out plug

2. Mount the ground terminal block to the bottom of the compartment with 2 screws and 2 locknuts (Figure 3).

   Note: Do not use the locknuts if flat nuts exist on the bracket.

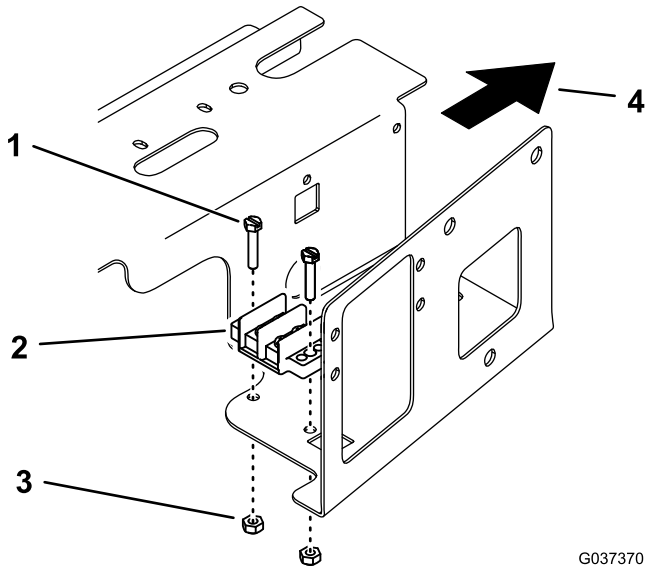

Figure 3

1. Screw
2. Ground terminal block
3. Locknut
4. Front direction

3. Mount the jumper strip to the ground terminal using 2 of the ground terminal block screws.
4. Mount the fuse block to the side of the compartment, above the existing fuse block, with 2 screws and 2 locknuts (Figure 4).

   Note: Do not use the locknuts if flat nuts exist on the bracket.

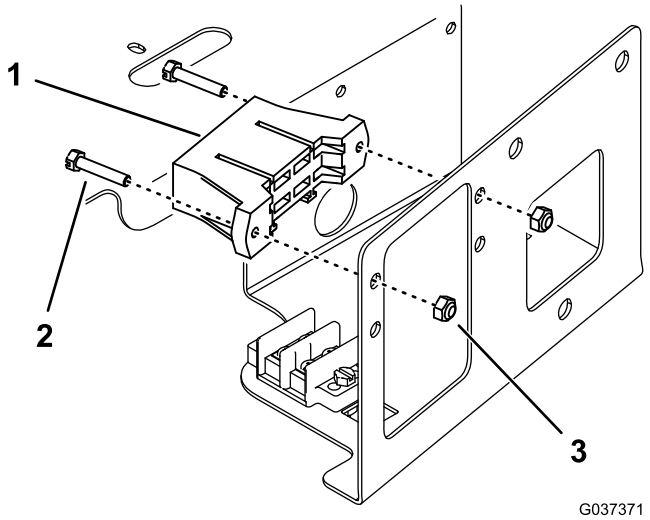

Figure 4

Fuse block wires not shown

1. Fuse block
2. Screw
3. Locknut

5. Mount the power relay to the flat nut on the side of the compartment with a screw (Figure 5).

   Note: Use a locknut if there is no flat nut. You may need to remove the 4 screws securing the mounting panel and pull up the mounting panel to install the locknut.

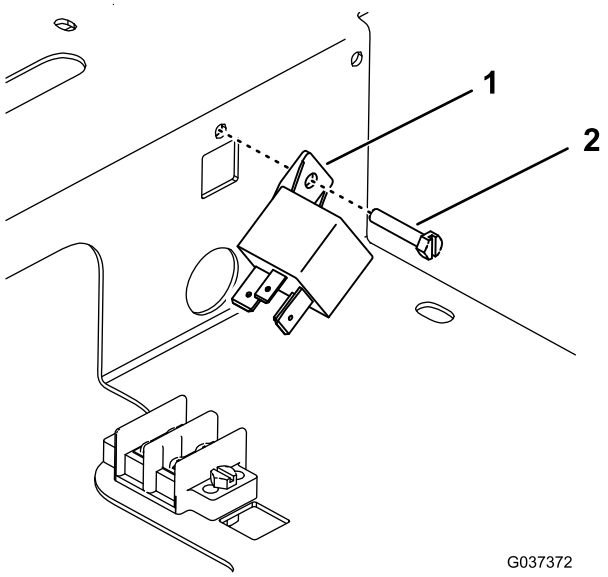

Figure 5

1. Power relay
2. Screw

6. Remove the knock-out plug from the side of the control-panel plate (Figure 2).
7. Unscrew the outer shell from the threaded power point connector body.
8. From the seat side of the control-panel plate, insert the power point into the hole, secure it with the outer shell, and insert the cap into the power point (Figure 6).

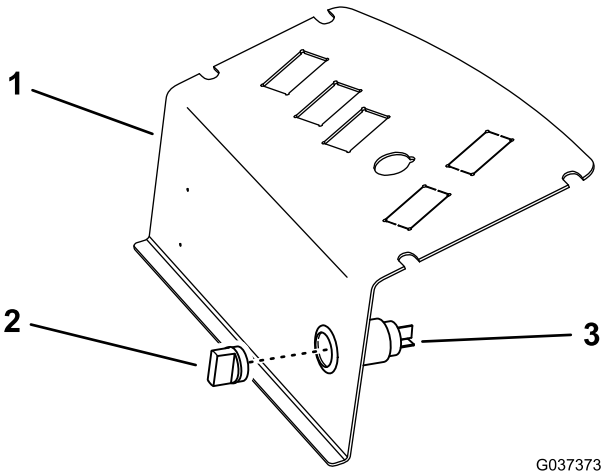

Figure 6

1. Control-panel plate
2. Cap
3. Power point

For a Groundsmaster 7200/7210 Machine

1. Unlatch and raise the seat.
2. Unlatch the control-panel assembly and lay it aside (Figure 7).

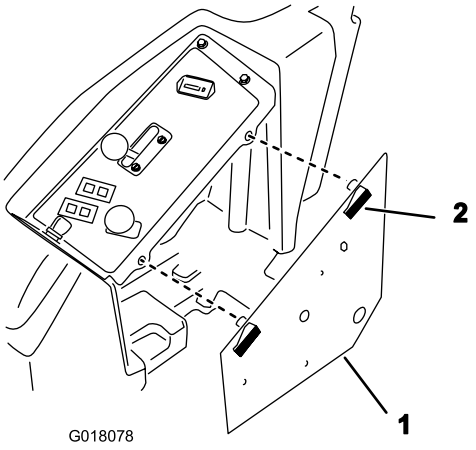

Figure 7

1. Control-panel assembly
2. Latch

3. Mount the ground terminal block to the bottom of the control-panel assembly with 2 screws and 2 locknuts (Figure 8).

   Note: Install the screws from the underside of the panel as shown in Figure 8.

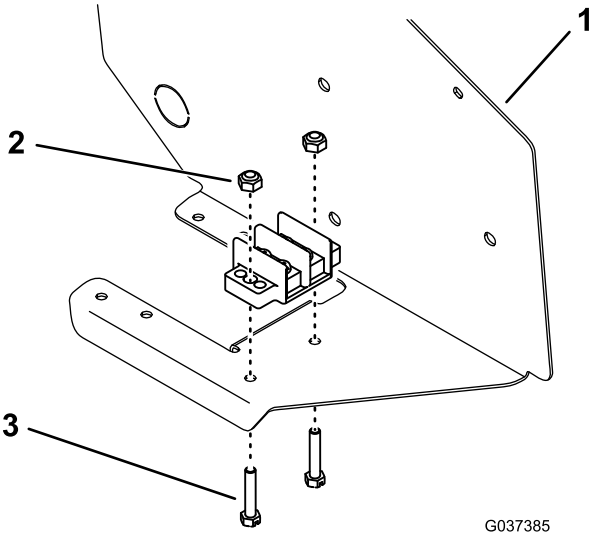

Figure 8

1. Control-panel assembly
2. Locknut
3. Screw

4. Mount the jumper strip to the ground terminal using 2 of the ground terminal block screws.
5. Mount the fuse block to the bottom of the control-panel assembly, next to the existing fuse block, with 2 screws and 2 locknuts (Figure 9).

Note: Install the screws from the underside of the panel as shown in Figure 9.

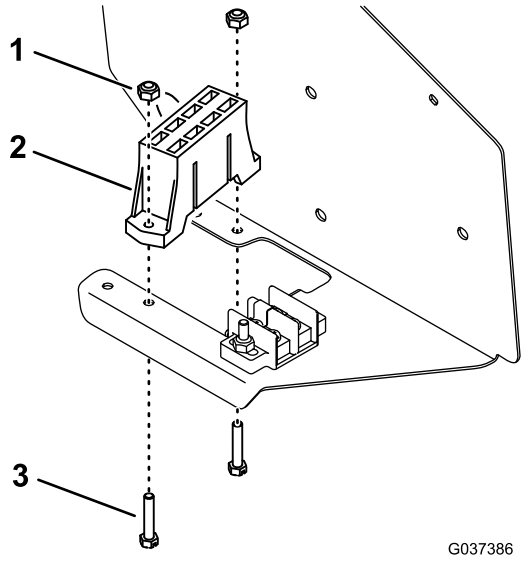

Figure 9

1. Locknut
2. Fuse block
3. Screw

6. Mount the power relay to the inside of the control panel with a screw and nut (Figure 10).

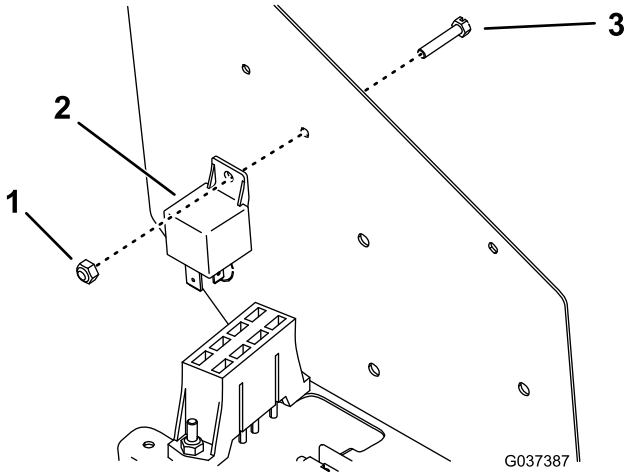

Figure 10

7. Remove the knock-out plug from the side of the control panel (Figure 11).

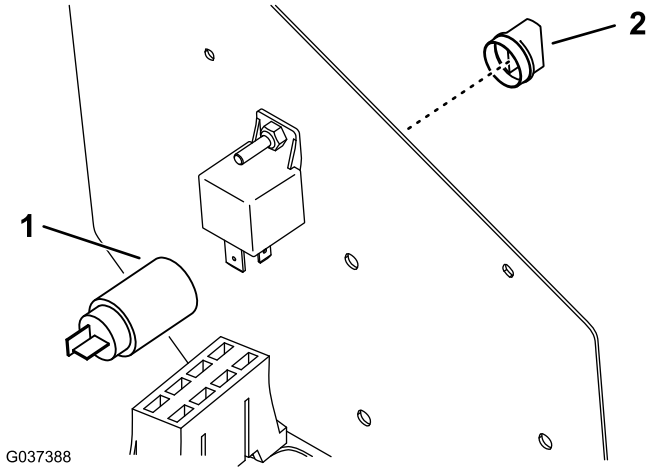

Figure 11

1. Power point in knockout location
2. Cap

8. Unscrew the outer shell from the threaded power point connector body.
9. From the seat side of the control panel, insert the power point into the hole, secure it with the outer shell, and insert the cap into the power point.

3

Routing the Wire Harness

Parts needed for this procedure:

1	Wire harness (3 connections)
1	Wire harness (7 connections)
1	Fuse (10 A)

For a Groundsmaster 3320/3280-D Machine (Serial Numbers 250000001 through 259999999)

Note: Use the wire harness with 3 connections.

1. Install the accessory relay connector from the traction-unit wire harness into the power relay (Figure 12).

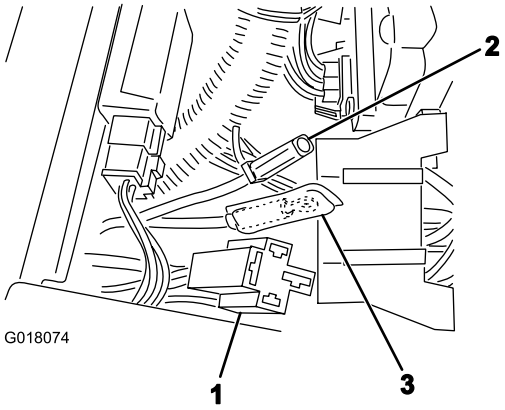

Figure 12

1. Accessory relay connector
2. Large, red wire
3. Black wire

2. Connect the large, red wire (Figure 12) from the auxiliary fuse block to the mating connector from the traction-unit harness.
3. Connect the power point connector from the kit wire harness to the power point.
4. Connect the yellow wire to an open lead on the fuse block (Figure 13).
5. Attach the black wires from the traction-unit wire harness and the kit wire harness to the ground block (Figure 12 and Figure 13).
6. Insert a 10 A fuse into the fuse block slot for the yellow wire.
7. Install the control panel and secure it with the thumbscrews that you previously removed.
8. Connect the negative battery cable to the battery.

   Note: When the kit is properly installed, the power point and fuse block should only have power when the traction-unit ignition switch is in the ON position.

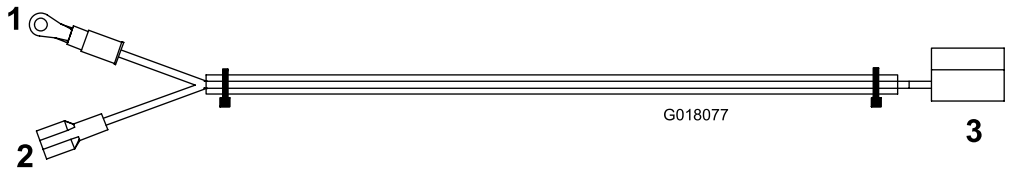

Figure 13

1. To ground (black)
2. To fuse block (yellow)
3. To power point

For a Groundsmaster 3320/3280-D (Serial Numbers 260000001 and up) or Groundsmaster 7200/7210 Machine

Note: Use the wire harness with 7 connections. Refer to Figure 14 for the procedure.

1. Mount the black (ground) wires from the wire harness and the traction-unit harness to the ground terminal block with 2 screws from the block.
2. Connect the large, red wire to the red wire from the traction-unit harness.
3. Connect the pink wire to the pink wire from the traction-unit harness.

   Note: For a Groundsmaster 7200/7210 machine with a Polar Trac Kit, connect the pink wire from the wire harness to the open orange Polar Trac wire instead.
4. Connect the white wire (spade terminal) into a fuse block slot. Insert a fuse (10 A) into the fuse slot.

   Note: Make sure that the fuses are installed in the slots that have wires connected to the harness. The remaining fuse block wires are not used at this time.
5. Connect the large, red wire from the fuse block to the mating connector from the wire harness.
6. Plug the wire harness connector into the power relay connector.
7. Plug the wire harness connector into the power point connector.
8. Install the control panel and secure it with the thumbscrews that you previously removed.
9. Connect the negative battery cable to the battery.

   Note: When the kit is properly installed, the power point and fuse block should only have power when the traction-unit ignition switch is in the ON position.

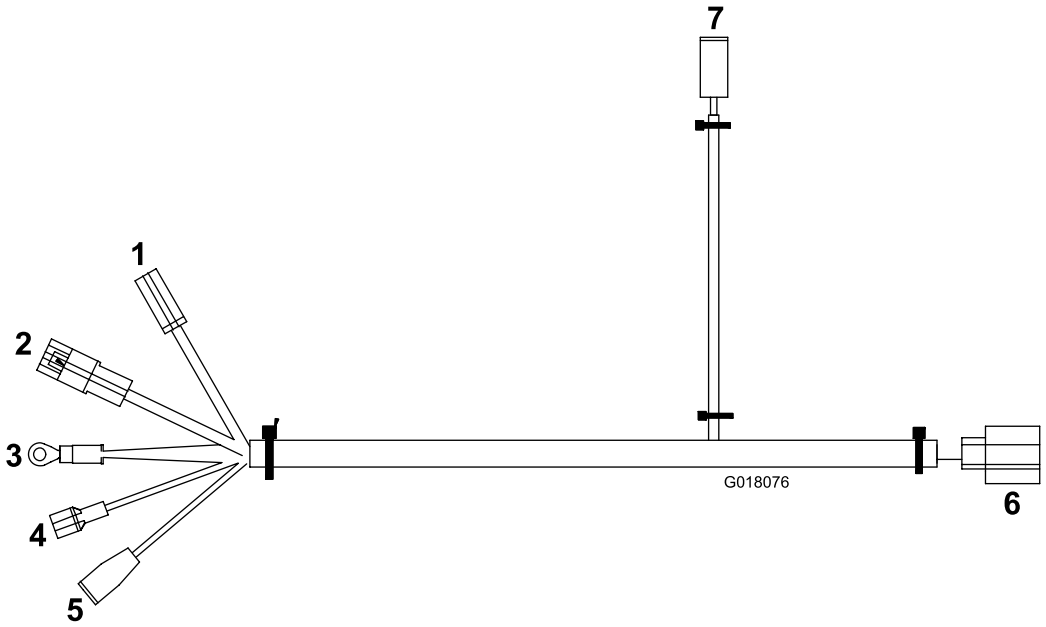

Figure 14

1. To new fuse block (red)
2. To traction-unit harness (red)
3. To ground (black)
4. To fuse block (white)
5. To traction-unit harness (pink)
6. To power relay
7. To power point

Notes:



Count on it.