Form No. 3406-951 Rev A

TORO®

Count on it.

Parts Catalog

Power Max® Heavy Duty 1028 OXE Snowthrower

Model No. 38824—Serial No. 400010798 and Up

Register at www.Toro.com.
Original Instructions (EN)

CE

3406-951 A

Ordering Replacement Parts

To order replacement parts, please supply the part number, the quantity, and the description of each part desired.

Understanding Reference Numbers

Each identified part in an illustration has a reference number. The reference number for a part also appears in the parts list, along with other information about the part.

This catalog uses two special reference number formats, one to indicate parts in a service assembly and another to indicate the quantity of a given part in an illustration.

Service Assembly Reference Numbers

Parts in service assemblies have reference numbers in the form a:b. The a represents the reference number of the entire service assembly and the b represents a sequential number unique to each part within the service assembly.

For example, a wheel assembly might be identified by reference number 6, the tire by 6:1, the valve by 6:2, and the wheel by 6:3. When you order the assembly identified by reference number 6, you receive all parts identified by reference numbers 6:1,6:2, and 6:3. However, you may also order any part individually. Reference numbers of this type appear in illustration and in parts lists.

Reference Numbers Indicating Quantity

In an illustration, if a reference number indicates more than one part, the reference number has the form nX y. The n represents the quantity of the part, the X is the multiplication symbol, and the y represents the reference number.

For example, in an illustration, the reference number 2X 37 means that two of the parts identified by reference number 37 are indicated.

List of Abbreviations

AR: as required

ASM: assembly

BBC: blade brake control

BHTF: button head thread forming

CARR: carriage

CCW: counter clockwise

CW: clockwise

DEG: degrees

DPA: Dual Point Adjustment

ECM: electronic control module

EXT: external

FH: flat head

GA: gauge

HD: heavy-duty

HF: hex flange

HH: hex head

HHF: hex head flange

HHFTF: hex head flange thread forming

HJ: hex jam

HLH: hex lag head

HOC: height-of-cut

HP: high pressure

HSBH: hex socket button head

HSFH: hex socket flat head

HSH: hex socket head

HWH: hex washer head

HWHTF: hex washer head thread forming

HYD: hydraulic

LH: left hand

LP: low pressure

LPG: Liquefied Petroleum Gas

NI: nylon insert

NPTF: national pipe thread fine

PFH: phillips flat head

PPH: phillips pan head

PPHTF: phillips pan head thread forming

PRH: phillips round head

PTH: phillips truss head

PTO: power-take-off

RH: right hand

ROPS: roll-over protection system

RRB: rear roller brush

SFH: slotted fillister head

SHH: slotted hex head

SHWH: slotted hex washer head

SPH: slotted pan head

SQH: square head

SRH: slotted round head

STD: standard

TAP: self tapping

TTH: torx truss head

Contents

Main Frame Assembly 4
Housing Assembly 6
Idler and Linkage Assembly 8
Auger and Impeller Assembly 10
Gear Case Assembly No. 125-7926 12
Impeller Assembly 14
Engine Assembly 16
No. 1 Engine Assembly 18
No. 2 Engine Assembly 20
No. 3 Engine Assembly 22
Engine Decal Assembly 24
Chute Assembly 26
Lever Chute Control Assembly 28
Handle Assembly 30
Control Assembly 32
Wheel Clutch Assembly 34
Wheel Clutch Sprocket Assembly 36
Attachments and Accessories 38

© 2016—The Toro® Company
8111 Lyndale Avenue South
Bloomington, MN 55420

Contact us at www.Toro.com.
Printed in the USA.
All Rights Reserved

Main Frame Assembly

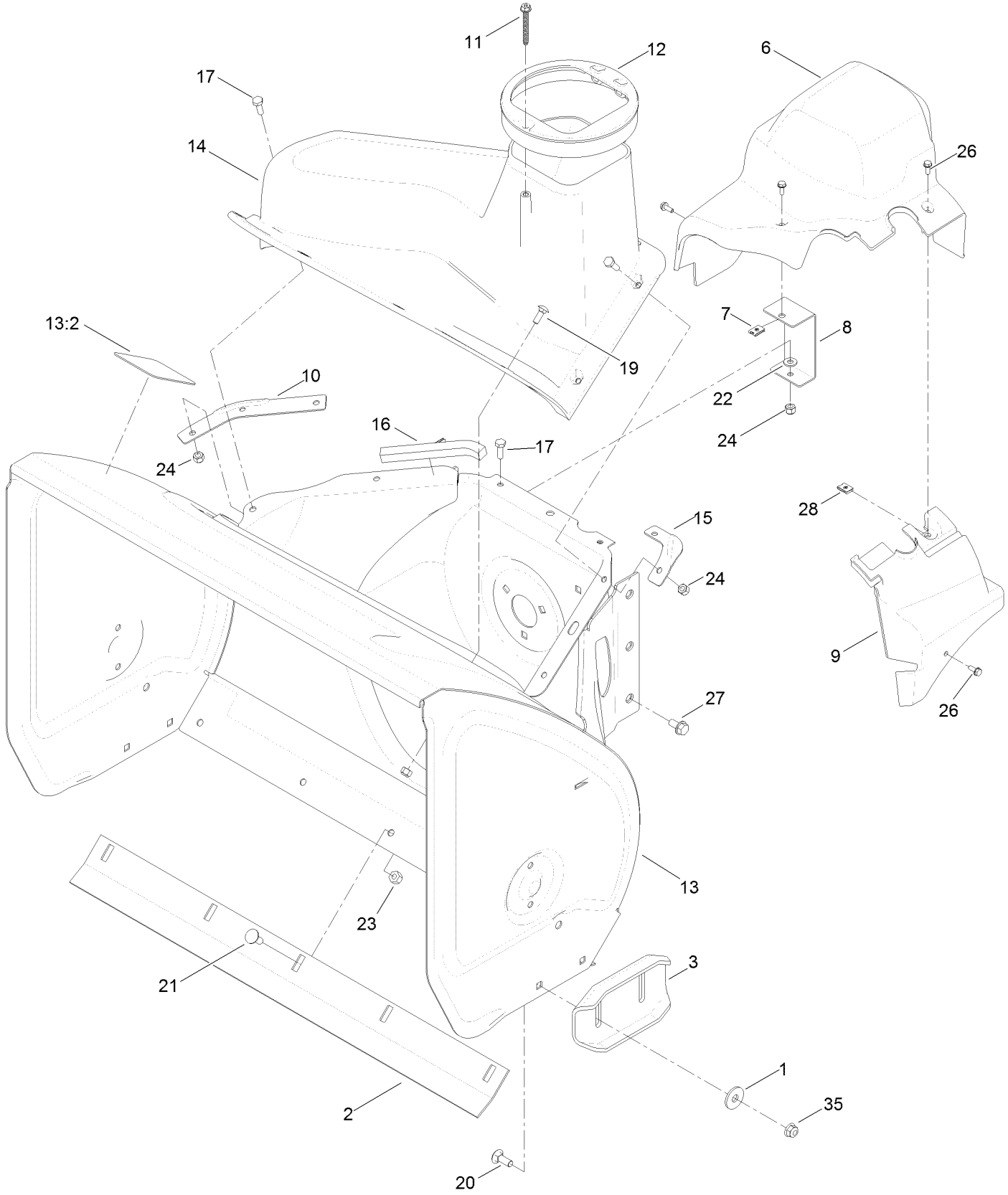

Main Frame Assembly (continued)

Ref.	Part Number	Qty.	Description
1	52-2861	4	Washer
2	106-4573-01	1	Scraper-Fixed
3	106-4588-01	2	Skid
6	119-1563	1	Cover-Belt
7	107-1013	1	Nut-Speed, U-Type
8	107-1014-03	1	Bracket-Cover, Clip Nut
9	107-1016	1	Cover-Extension, Belt
10	107-1017-03	1	Seal-Flange, Cover
11	114-3751	1	Screw-HWH, Plastite
12	107-3006	1	Guide-Chute
13	107-3824	1	Housing-Auger, 28 Inch
13:2	107-3040	1	Decal-Danger, Auger
14	108-0017	1	Cover
15	108-0039-03	1	Seal
16	120-0124	1	Seal-Housing
17	321-4	7	Screw-HH
19	3229-1	4	Bolt-CARR
20	3230-16	4	Screw-CARR
21	3230-23	5	Screw-CARR
22	3256-22	1	Washer-Flat
23	3296-29	5	Nut-Lock, NI
24	3296-42	11	Nut-Lock, NI
26	32144-112	4	Screw-HWH
27	32144-14	6	Screw-HWHTF
28	701493	1	Nut-Speed
35	104-8300	4	Nut-Flange, NI

Housing Assembly

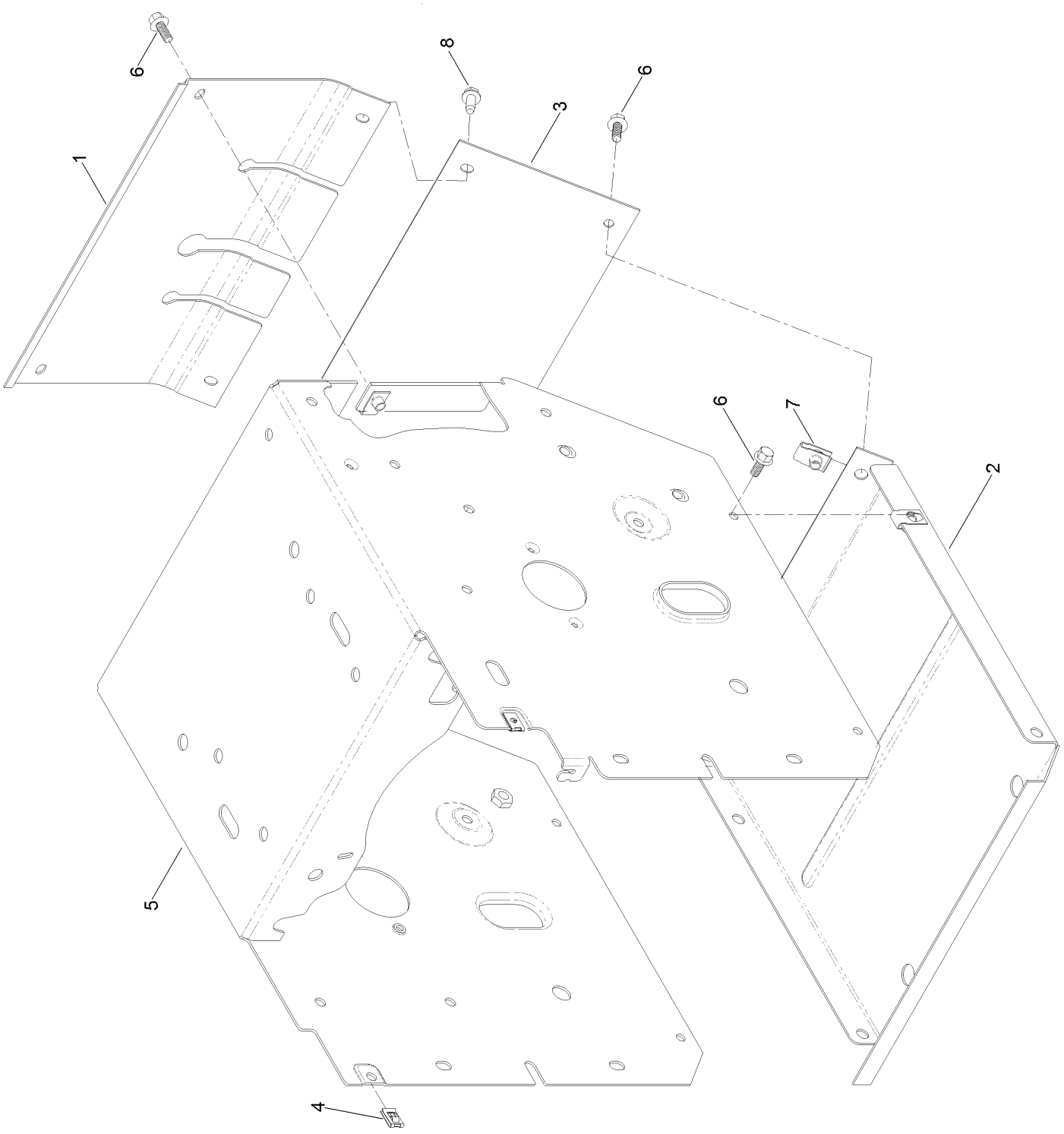

Housing Assembly (continued)

Ref.	Part Number	Qty.	Description
1	108-0022-01	1	Cover-Upper
2	106-7330-01	1	Pan-Bottom
3	106-7345-01	1	Cover-Lower
4	107-1013	2	Nut-Speed, U-Type
5	120-9832-01	1	Traction Frame ASM
6	99-6810	8	Screw-HHF
7	107069	7	Clip
8	32144-10	2	Screw-HWH

Idler and Linkage Assembly

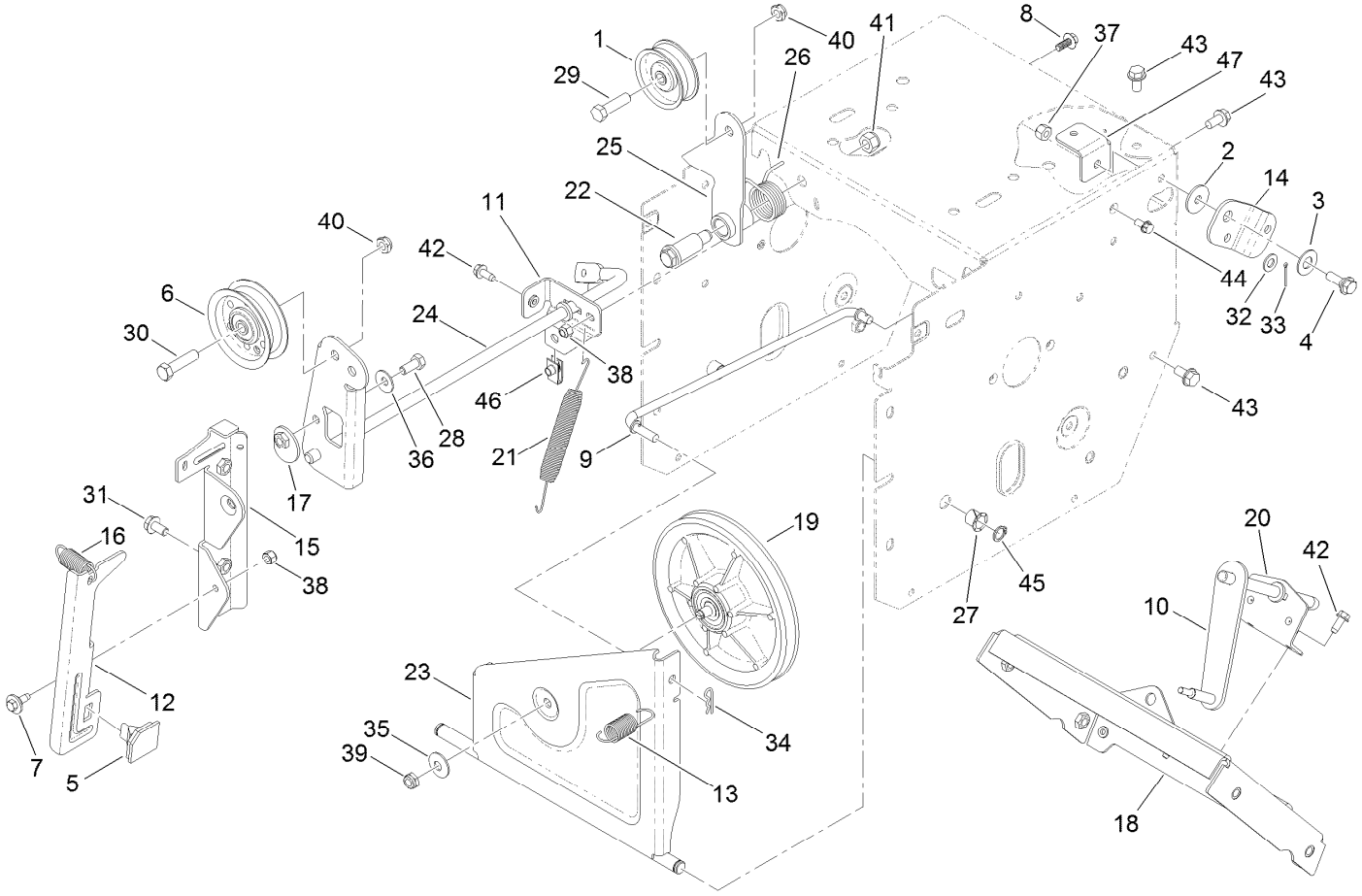

Idler and Linkage Assembly (continued)

Ref.	Part Number	Qty.	Description
1	3-4244	1	Pulley-Idler
2	5-4460	1	Washer-Pivot
3	25-5640	1	Washer
4	27-0410	1	Screw-Shoulder
5	66-8060	1	Pad-Brake
6	92-7104	1	Pulley-Idler
7	92-9698	1	Screw-Shoulder
8	99-6810	1	Screw-HHF
9	106-4467	1	Link-Control, Speed
10	106-7268	1	Lever-Control, Traction
11	120-9824	1	Bracket-Clutch, Impeller
12	107-1000	1	Arm-Brake
13	107-1003	1	Spring-Extension
14	107-1011	1	Bellcrank-Drive
15	107-1039	1	Bracket-Idler, Impeller
16	107-1045	1	Spring-Extension
17	107-1047	1	Nut
18	108-0026-01	1	Shift Plate ASM
19	108-0031	1	Pulley-Traction
20	108-0036	1	Bracket-Rod, Shift
21	108-2976	1	Spring-Extension
22	108-5056	1	Bolt-Shoulder
23	108-7307	1	Bracket-Wheel, Friction
24	120-0144-03	1	Impeller Clutch ASM
25	120-0148	1	Traction Idler Arm
26	120-3060	1	Spring-Torsion
27	256-257	2	Bushing-Nyliner
28	322-3	1	Screw-HH
29	323-29	1	Screw-HH
30	323-8	1	Screw-HH
31	3234-7	2	Screw-HHF
32	3256-23	1	Washer-Flat
33	3272-4	1	Pin-Cotter
34	3290-307	1	Pin-Cotter
35	3290-340	1	Washer-Belleville
36	3290-456	1	Washer-Belleville
37	3296-29	1	Nut-Lock, NI
38	3296-42	2	Nut-Lock, NI
39	3296-5	1	Nut-Lock
40	3296-59	2	Nut-Lock, NI
41	3296-76	1	Nut-Lock, NI
42	32144-10	3	Screw-HWH
43	32144-14	6	Screw-HWHTF
44	32144-4	1	Screw-HWH
45	32151-61	2	Ring-Retaining
46	107069	1	Clip
47	125-1124	1	Bracket-Frame, LH

Auger and Impeller Assembly

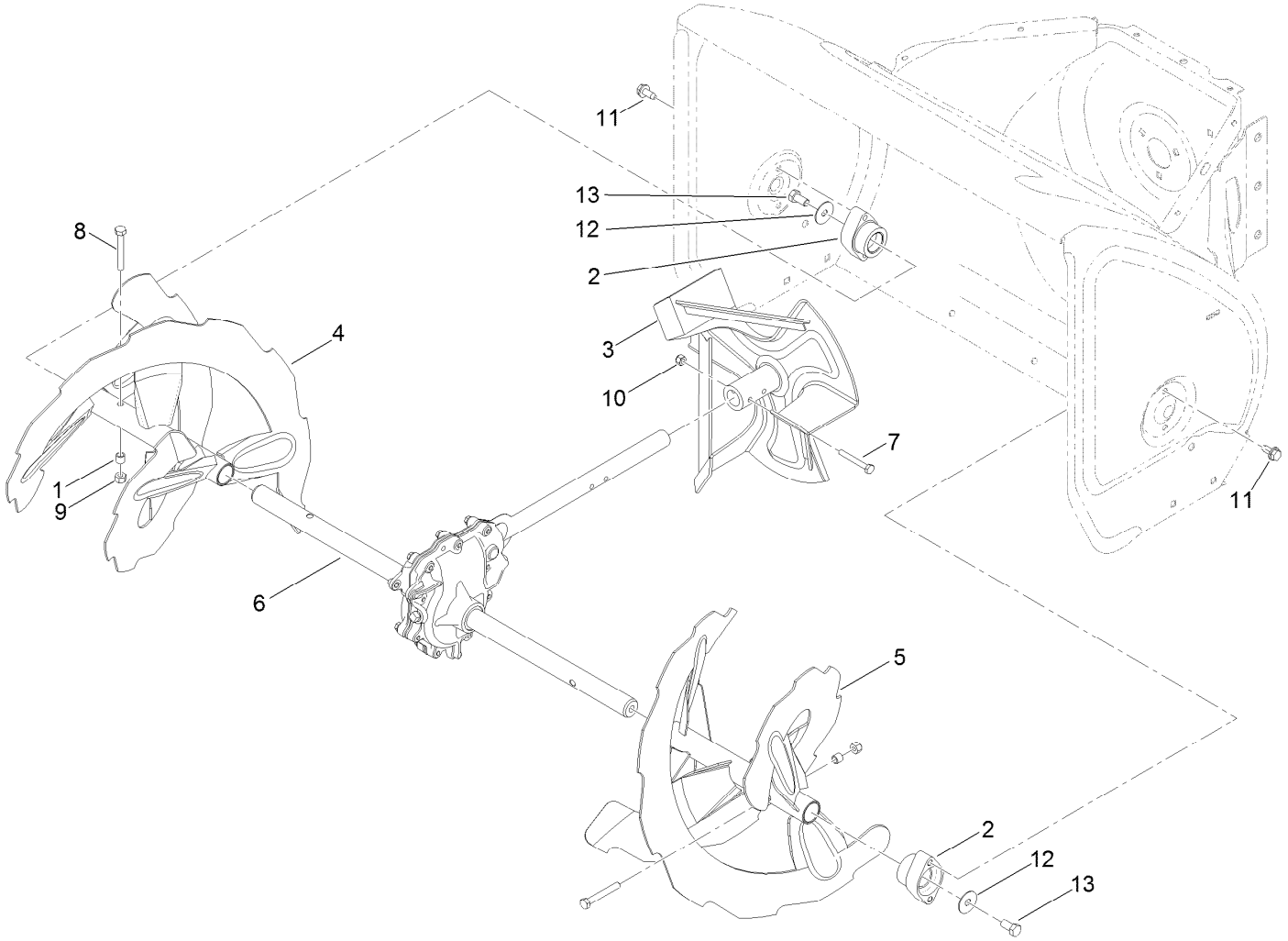

Auger and Impeller Assembly (continued)

Ref.	Part Number	Qty.	Description
1	1-633545	2	Spacer
2	106-4570	2	Bearing-Auger
3	106-4576-03	1	Impeller ASM
4	106-7291-03	1	RH Auger ASM
5	106-7301-03	1	LH Auger ASM
6	125-7926	1	28 Inch Auger Gearcase ASM
7	321-11	2	Screw-HH
8	322-11	2	Screw-HH
9	3296-29	2	Nut-Lock, NI
10	3296-42	2	Nut-Lock, NI
11	32144-70	4	Screw-HWHTF
12	3-0750	2	Washer
13	323-4	2	Screw-HH

Gear Case Assembly No. 125-7926

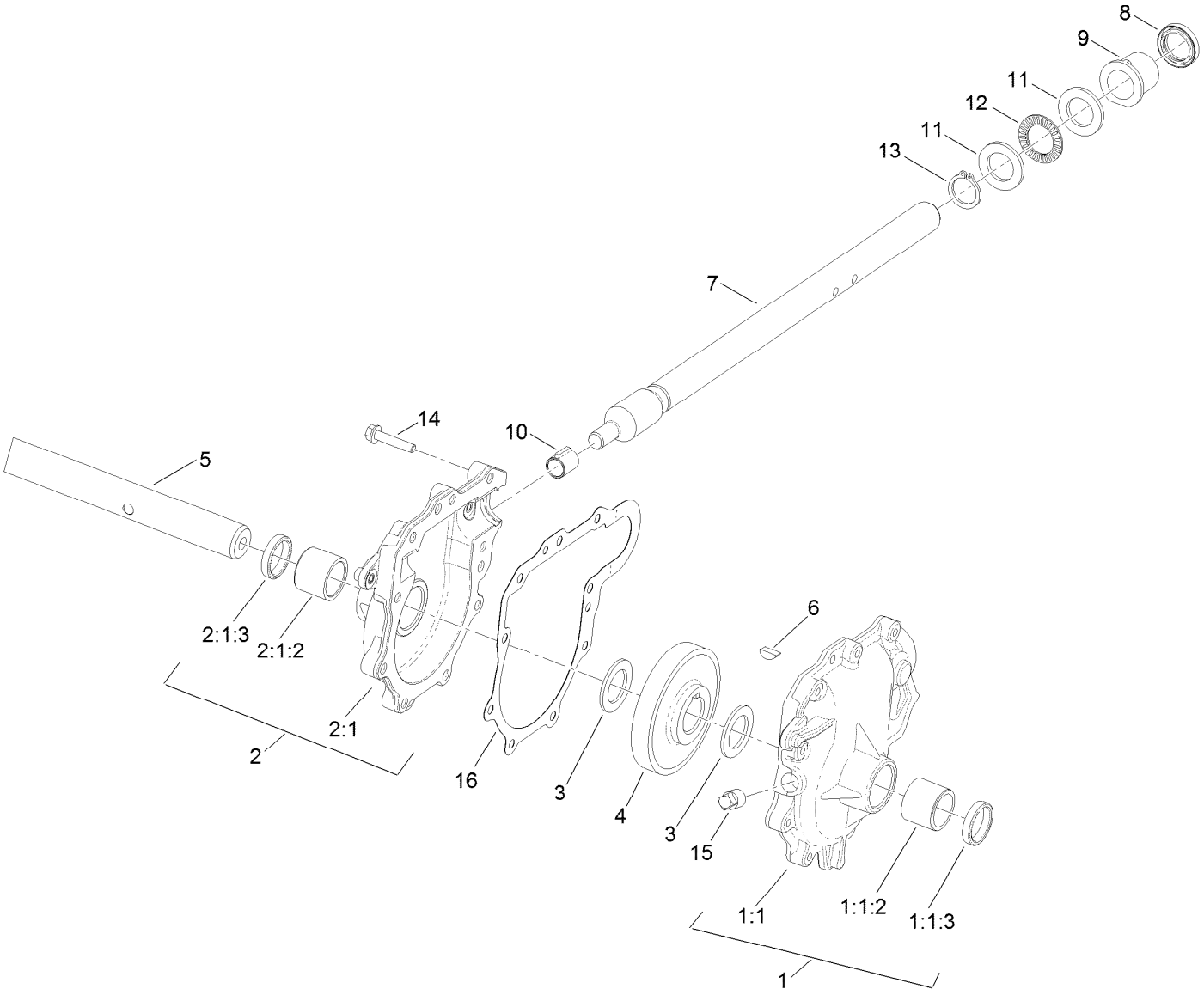

Gear Case Assembly No. 125-7926 (continued)

Ref.	Part Number	Qty.	Description
1	108-7325	1	LH Auger Gearcase ASM
1:1		1	Gearcase-Auger, LH ●
1:1:2	112-6635	1	Bushing-Sleeve
1:1:3	7-0045	1	Seal-Oil
2	108-7327	1	RH Auger Gearcase ASM
2:1		1	Gearcase-Auger, RH ●
2:1:2	112-6635	1	Bushing-Sleeve
2:1:3	7-0045	1	Seal-Oil
3	252-71	2	Washer-Thrust
4	62-0120	1	Gear-Helical
5	106-4421	1	Shaft-Auger
6	3257-10	1	Key-Woodruff
7	66-7811	1	Shaft-Impeller
8	253-149	1	Seal-Oil
9	37-6560	1	Bushing-Input
10	62-1150	1	Bushing-Worm
11	252-78	2	Washer-Thrust
12	252-76	1	Bearing-Thrust
13	32151-33	1	Ring-Retaining, Ext
14	108-4862	9	Screw-HWHTF
15	121-6832	1	Plug-Pipe, SQH
16	108-7330	1	Gasket-Gearcase, Auger

● Not serviced separately

Impeller Assembly

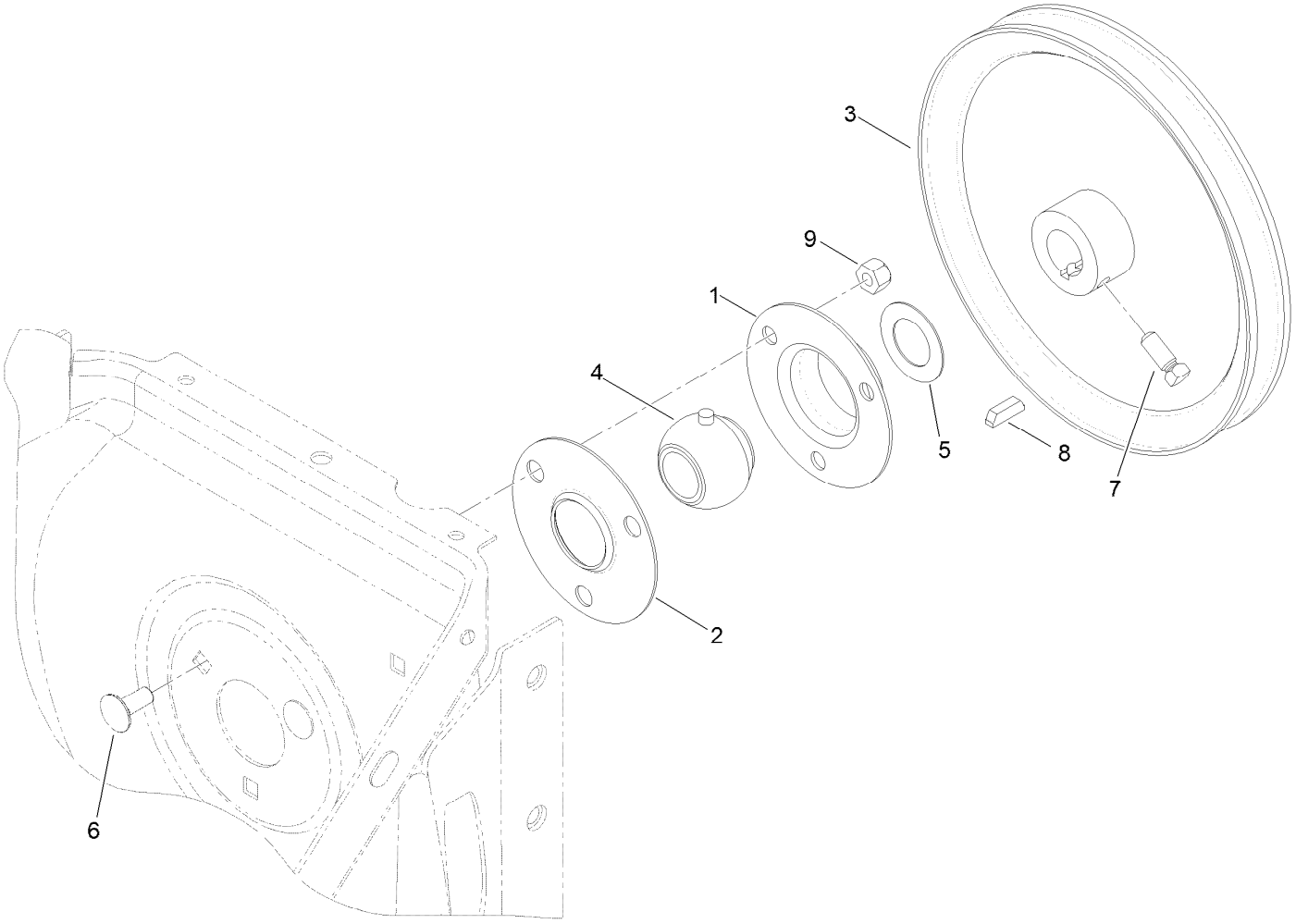

Impeller Assembly (continued)

Ref.	Part Number	Qty.	Description
1	26-6110	1	Flange-Cup, Bearing
2	26-6120	1	Flange-Cup, Bearing
3	62-1300	1	Pulley-Impeller
4	63-3450	1	Bearing-Ball
5	110-6767	1	Washer-Thrust
6	3230-23	3	Screw-CARR
7	1-803050	2	Screw-Set
8	3257-23	1	Key-Woodruff
9	3296-29	3	Nut-Lock, NI

Engine Assembly

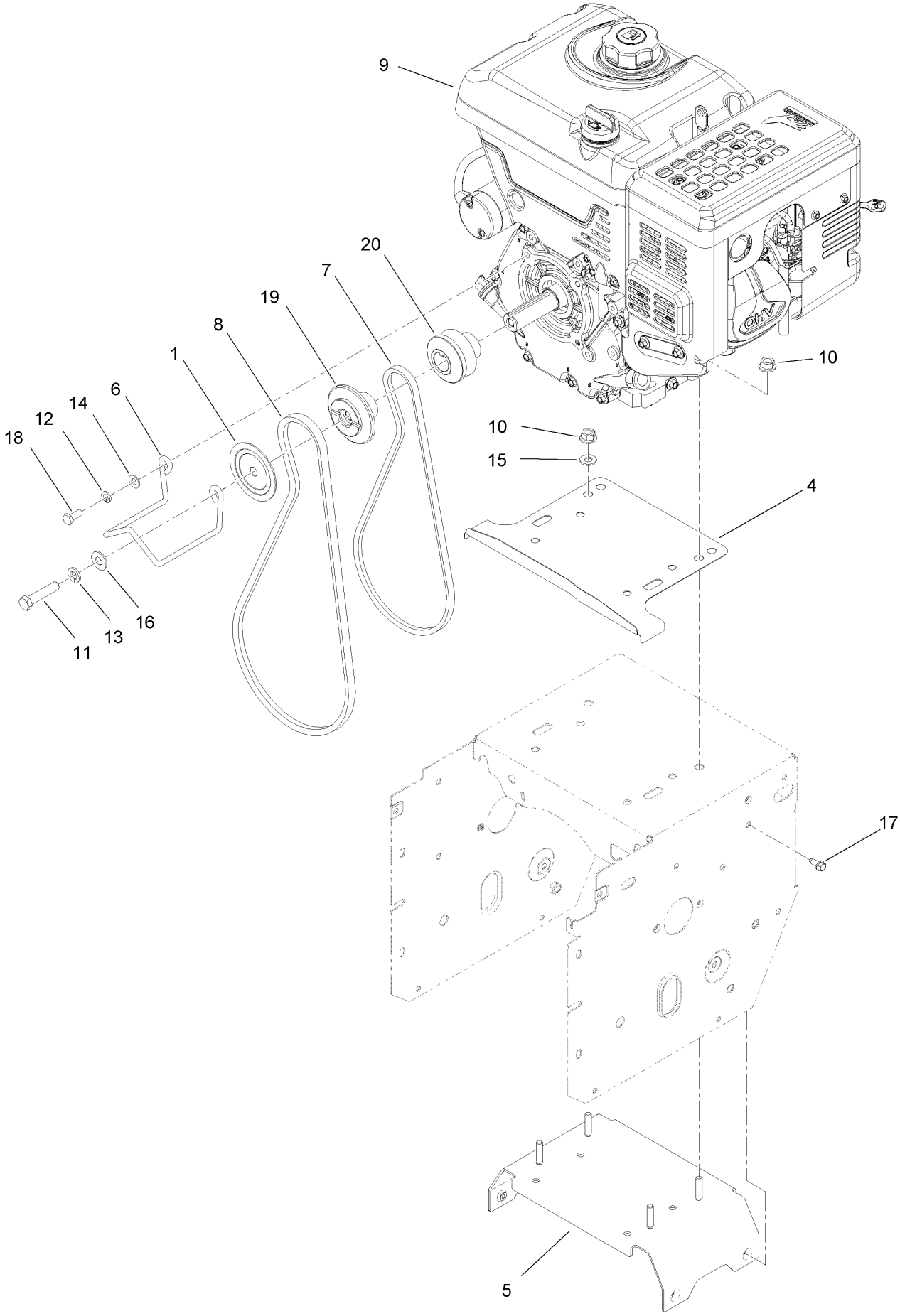

Engine Assembly (continued)

Ref.	Part Number	Qty.	Description
1	62-0940	1	Sheave-Half, Impeller
4	117-6022-01	1	Shield-Drive
5	119-1560	1	Frame Brace ASM
6	119-1562	1	Guide-Belt
7	119-1564	1	Belt-V
8	125-1145	1	Belt-V
9	120-4426	1	Engine-180Fds-1
10	120-3067	4	Nut-Flange
11	3212-8	1	Screw-HH
12	3253-4	2	Washer-Lock
13	3253-6	1	Washer-Lock
14	3256-23	2	Washer-Flat
15	3256-24	1	Washer-Flat
16	3256-4	1	Washer-Flat
17	32144-10	4	Screw-HWH
18	33114-020	2	Screw-HH
19	121-6602	1	Pulley-Engine, Impeller
20	121-6617	1	Pulley-Traction

No. 1 Engine Assembly

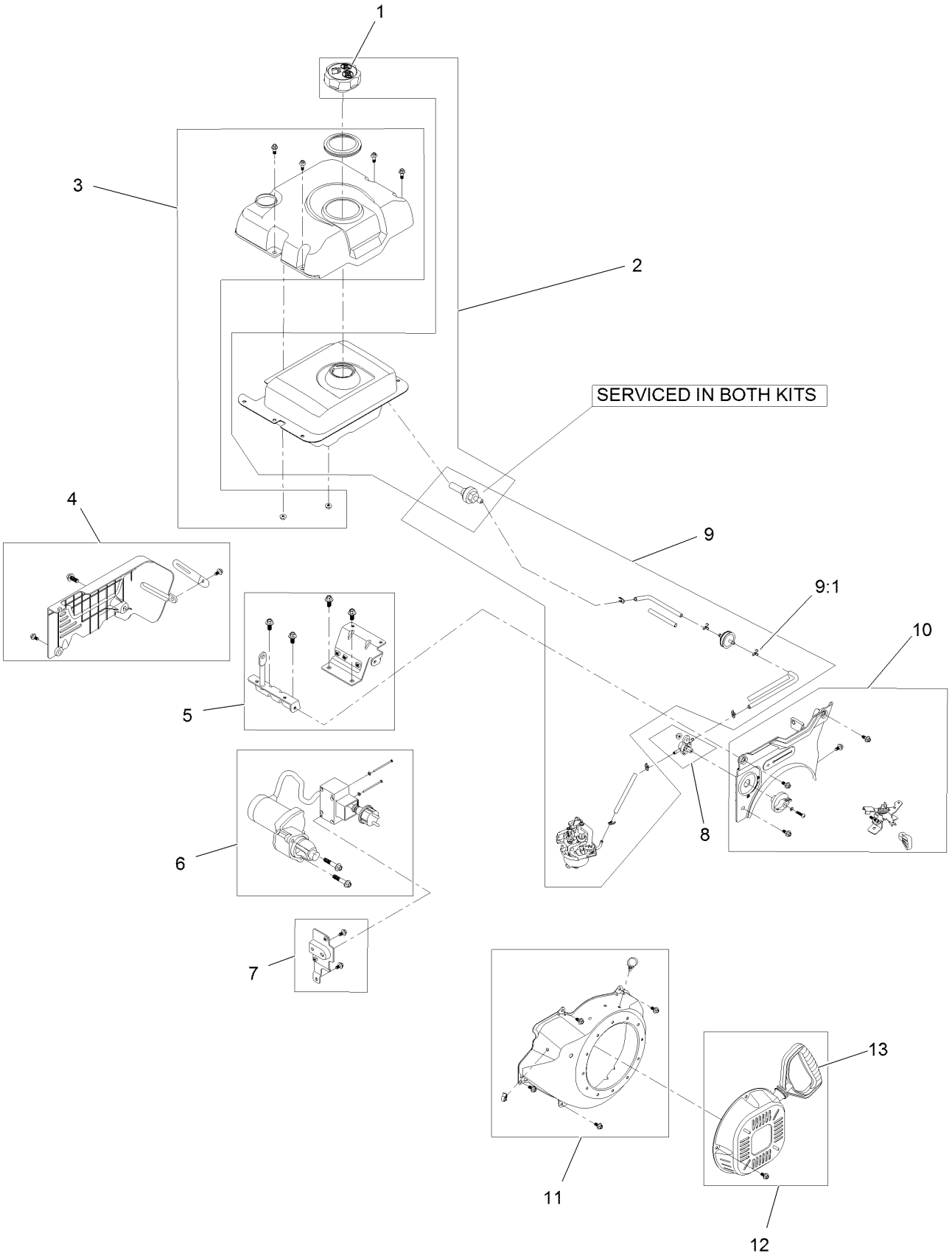

No. 1 Engine Assembly (continued)

Ref.	Part Number	Qty.	Description
1	133-9823	1	Cap-Fuel
2	121-0414	1	Fuel Tank And Cap Kit
3	121-0349	1	Fuel Tank Cover Kit
4	121-0347	1	Rear Panel And Hardware Kit
5	121-0351	1	Tank Mount Bracket Kit
6	133-1593	1	Electric Starter Kit
7	121-4103	1	Switch Box Bracket Kit
8	121-4109	1	Fuel Shut-Off Valve Kit
9	121-0353	1	Complete Fuel Line Kit
9:1	121-0087	6	Clamp-Hose
10	121-4105	1	Front Panel Kit
11	121-0274	1	Recoil Shroud Kit
12	121-0342	1	Recoil Kit
13	121-0287	1	Handle-Recoil

No. 2 Engine Assembly

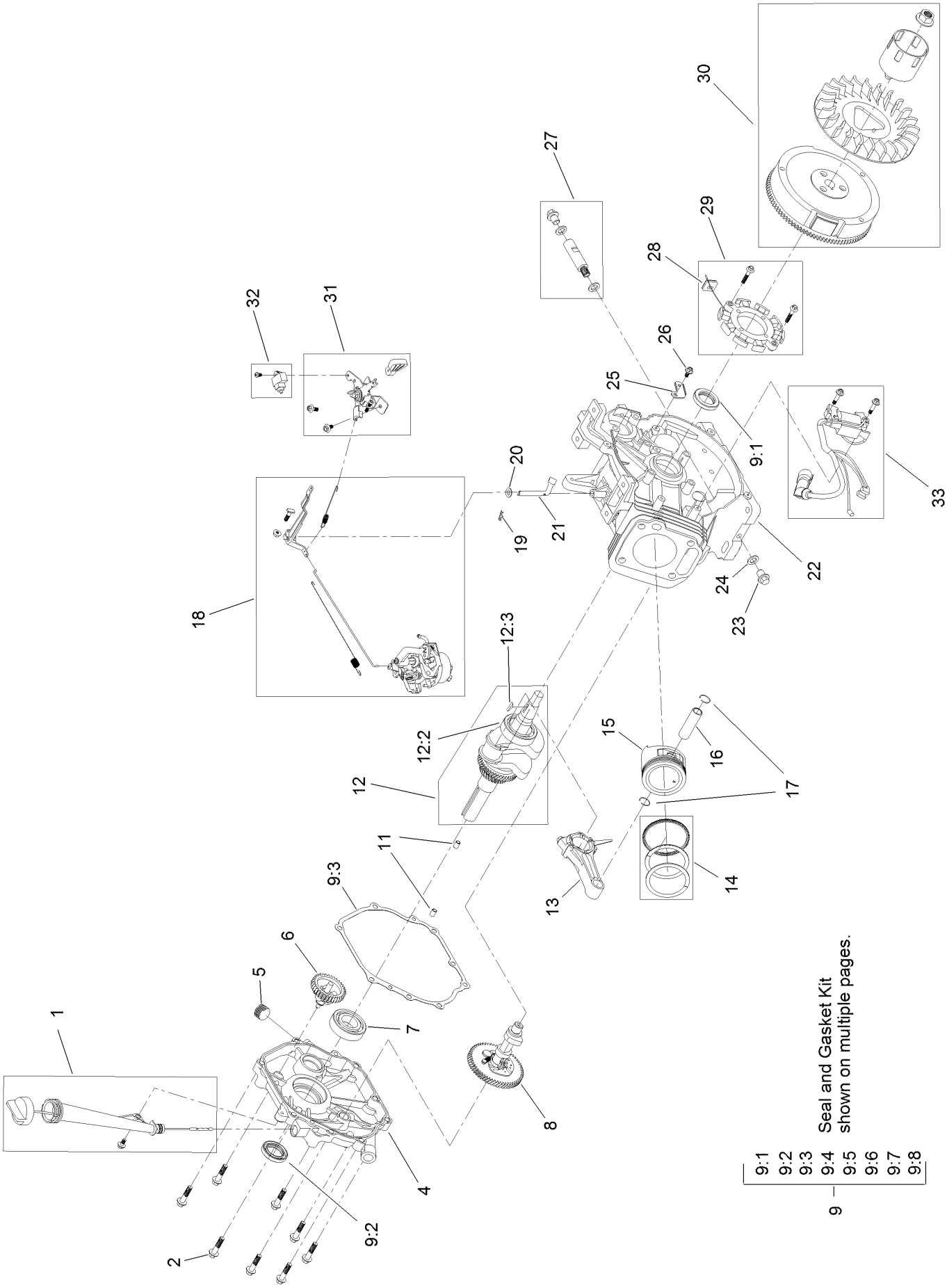

No. 2 Engine Assembly (continued)

Ref.	Part Number	Qty.	Description
1	133-9854	1	Oil Fill Kit
2	121-0299	8	Screw-HHF
4	133-9856	1	Cover-Crankcase
5	133-9805	1	Plug-Drain
6	121-0265	1	Governor Gear ASM
7	121-0315	1	Bearing-Main
8	121-0243	1	Camshaft ASM
9	121-0358	1	Seal And Gasket Kit
9:1	121-0316	1	Seal-Oil
9:2	121-0317	1	Seal-Oil
9:3	121-0228	1	Gasket-Cover, Crankcase
9:4	121-0231	1	Gasket-Head, Cylinder
9:5	121-0234	1	Gasket-Cover, Valve
9:6	121-0272	1	Gasket-Exhaust
9:7	121-0252	1	Gasket-Carburetor
9:8	121-0253	1	Gasket-Carburetor
11	121-0314	2	Pin-Dowel
12	121-0241	1	Crankshaft ASM
12:2	121-0315	1	Bearing-Main
12:3	120-4320	1	Key-Woodruff
13	121-0240	1	Connecting Rod ASM
14	121-0238	1	Set-Ring, Piston
15	121-0333	1	Piston
16	121-0237	1	Pin-Piston
17	121-0313	2	Clip-Pin, Piston
18	121-0352	1	Complete Governor Kit
19	120-4256	1	Pin-Hair
20	121-0311	1	Washer-Plain
21	121-0263	1	Shaft-Governor
22	121-0442	1	Crankcase
23	121-0222	1	Screw-HHF
24	121-0310	1	Washer-Plain
25	121-0278	1	Clamp
26	121-0118	1	Screw-HHF
27	121-0341	1	Drain Plug Kit
28	121-0325	1	Grommet-Rubber
29	121-0362	1	Stator Kit
30	121-0354	1	Fan And Flywheel Kit
31	121-4107	1	Throttle Control Kit
32	121-4106	1	Kill Switch Kit
33	121-0334	1	Ignition Module Kit

No. 3 Engine Assembly

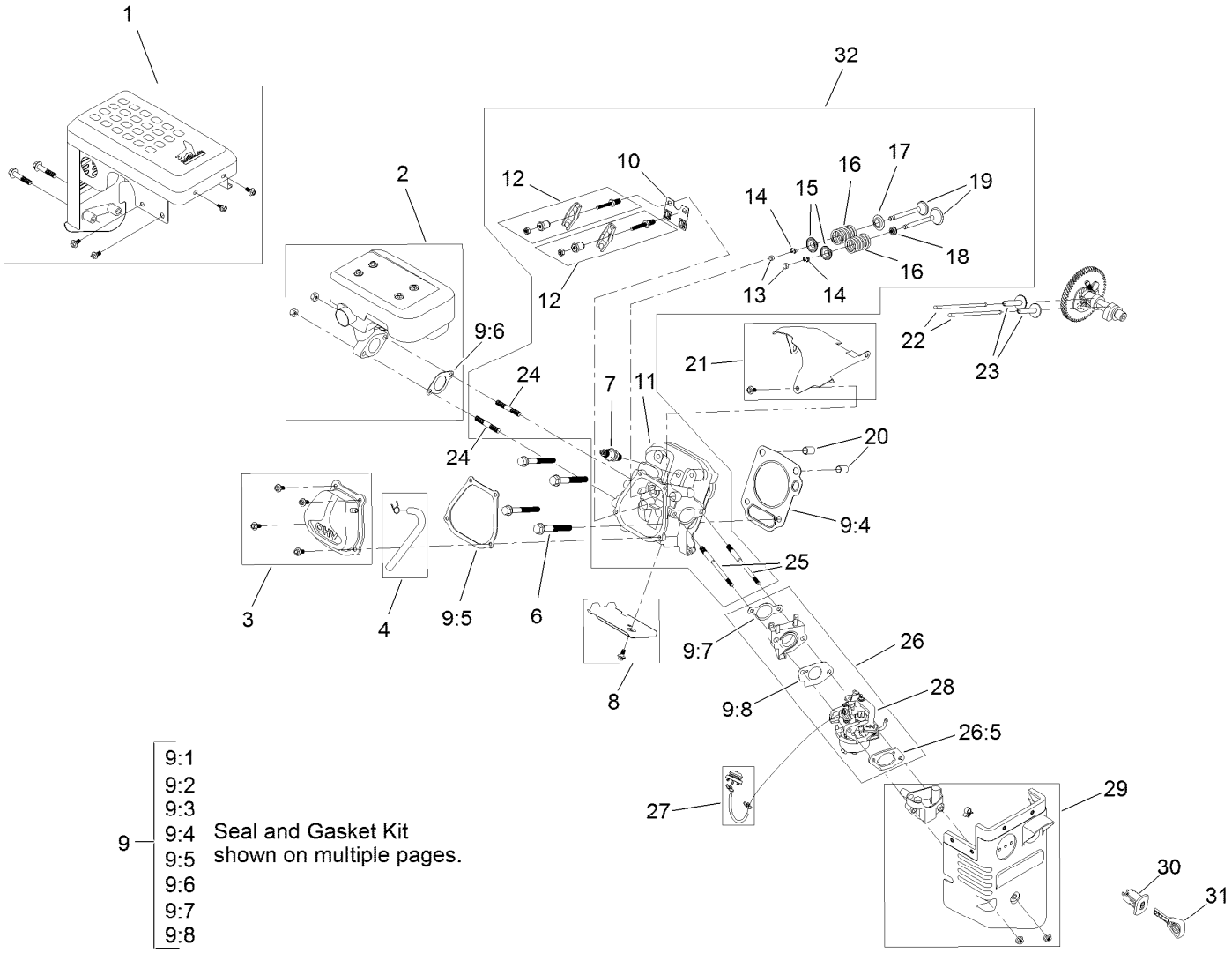

No. 3 Engine Assembly (continued)

Ref.	Part Number	Qty.	Description
1	121-4101	1	Muffler Shield Kit
2	127-9373	1	Muffler Kit
3	121-0343	1	Valve Cover Kit
4	121-0340	1	Breather Tube Kit
6	121-0302	4	Screw-HHF
7	119-1901	1	Plug-Spark
8	121-0348	1	Lower Heat Shroud Kit
9	121-0358	1	Seal And Gasket Kit
9:1	121-0316	1	Seal-Oil
9:2	121-0317	1	Seal-Oil
9:3	121-0228	1	Gasket-Cover, Crankcase
9:4	121-0231	1	Gasket-Head, Cylinder
9:5	121-0234	1	Gasket-Cover, Valve
9:6	121-0272	1	Gasket-Exhaust
9:7	121-0252	1	Gasket-Carburetor
9:8	121-0253	1	Gasket-Carburetor
10	121-0247	1	Plate-Guide, Push Rod
11	121-0230	1	Head-Cylinder
12	121-0245	2	Rocker Arm ASM
13	121-0244	2	Rotator-Valve
14	120-4307	4	Keeper-Valve
15	120-4306	2	Retainer-Spring, Valve
16	120-4305	2	Spring-Valve
17	120-4303	1	Seat-Spring, Valve
18	120-4304	1	Seal-Stem, Valve
19	121-0328	1	Valve Kit
20	120-4200	2	Pin-Dowel
21	121-4102	1	Upper Heat Shroud Kit
22	121-0246	2	Rod-Push
23	120-4298	2	Lifter-Valve
24	121-0304	2	Stud-Mount, Muffler
25	121-0303	2	Stud-Mount, Carburetor
26	121-0359	1	Complete Carb Service Kit
26:5	121-0254	1	Gasket-Coated, Rubber
27	127-9372	1	Primer Kit
28	127-9143	1	Carb Repair Kit With Gaskets
29	121-0355	1	Heater Box Kit
30	121-0283	1	Switch-Key
31	117-7728	1	Key
32	133-9855	1	Complete Head ASM
99	121-4241	1	High Altitude Kit-Power Max HD ●

● Not illustrated

Engine Decal Assembly

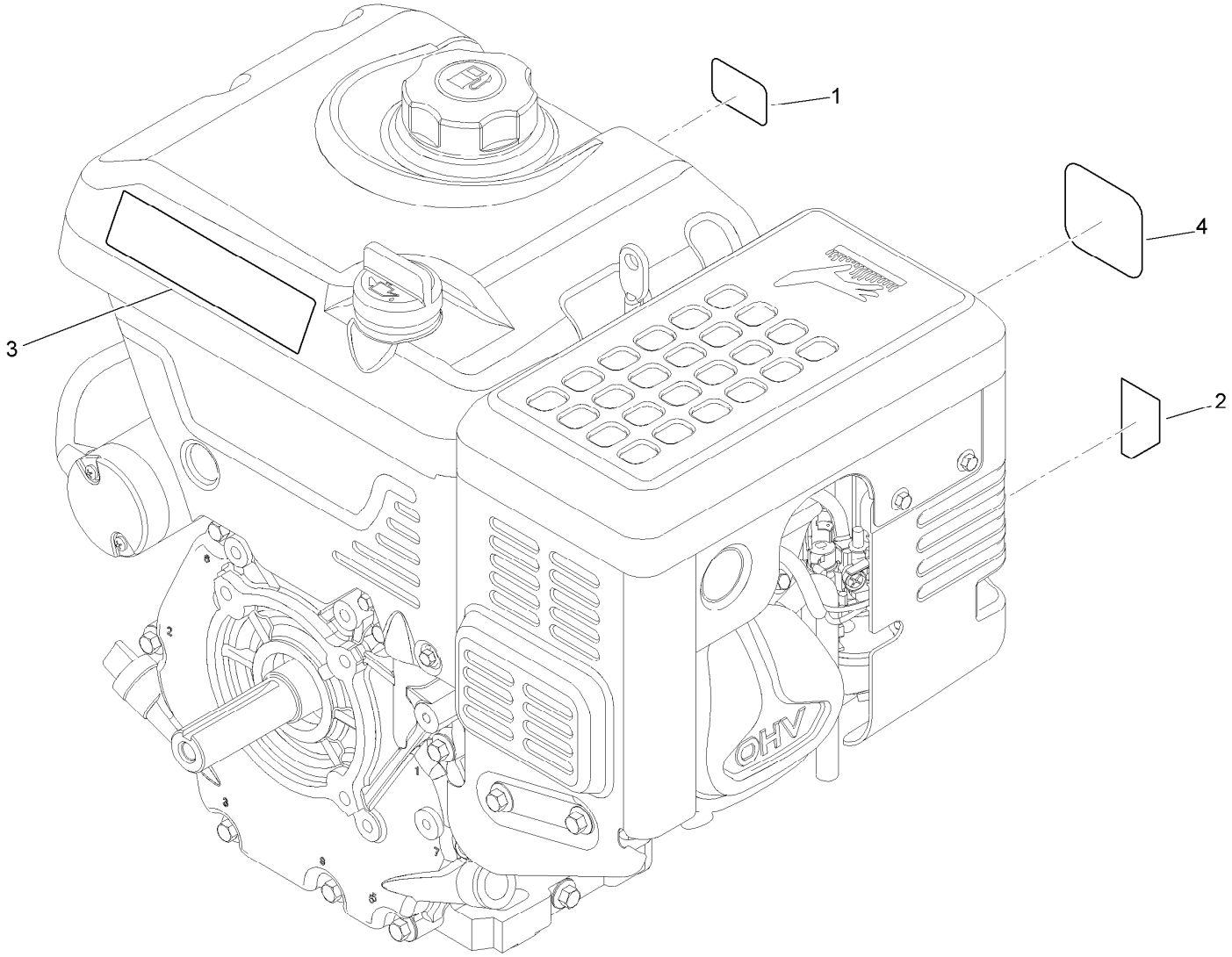

Engine Decal Assembly (continued)

Ref.	Part Number	Qty.	Description
1	125-1102	1	Decal-Throttle
2	120-9805	1	Decal-Control, Engine
3	120-9808	1	Decal-Engine
4	120-9811	1	Decal-Recoil

Chute Assembly

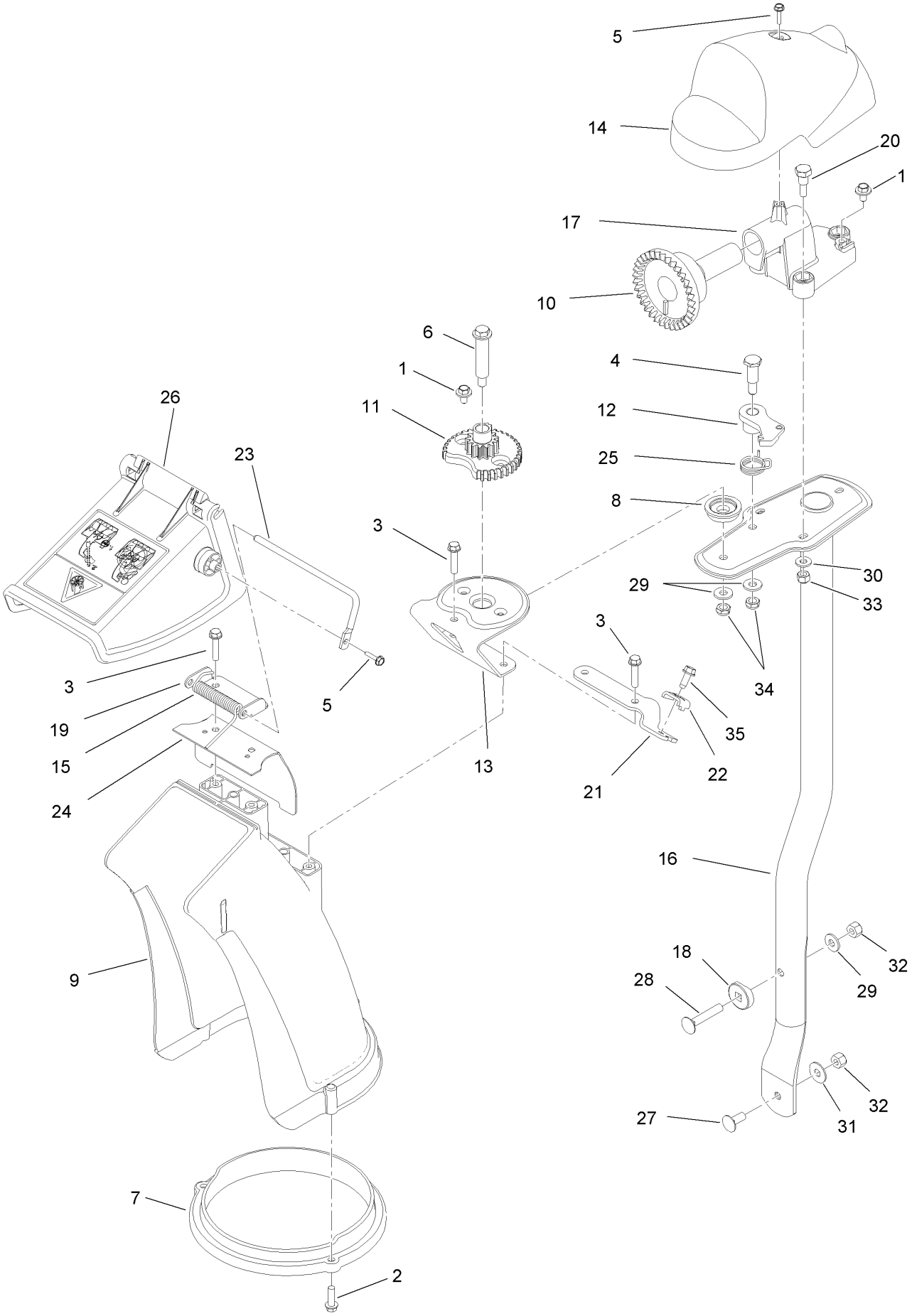

Chute Assembly (continued)

Ref.	Part Number	Qty.	Description
1	46-6810	3	Screw And Washer ASM
2	46-8091	3	Screw-HWH
3	46-8092	5	Screw-Plastite
4	63-2650	1	Screw-Shoulder
5	98-1375	2	Screw-HWH
6	100-9880	1	Bolt-Shoulder
7	105-9991	1	Ring-Chute
8	106-4422	1	Spacer-Chute
9	106-4440	1	Chute-Discharge
10	106-4471	1	Gear-Face
11	106-4472	1	Gear-Chute
12	106-4476	1	Latch-Chute
13	106-4582-03	1	Bracket-Support, Chute
14	106-4585	1	Cover-Gear, Chute
15	106-4594	1	Spring-Torsion
16	106-7253-03	1	Tube-Support
17	106-7257	1	Mount-Gear, Face
18	106-7260	1	Washer-Curved
19	106-7266	1	Bracket-Deflector
20	106-7276	3	Screw-Shoulder
21	106-7296	1	Bracket-Cable, Clamp
22	106-7297	1	Clamp-Cable
23	107-1021	1	Rod-Deflector
24	108-5052	1	Seal-Chute
25	108-7315	1	Spring-Torsion
26	112-6629	1	Deflector-Chute, Ce
27	3230-23	1	Screw-CARR
28	3230-5	1	Screw-CARR
29	3256-2	3	Washer-Flat
30	3256-22	3	Washer-Flat
31	3290-456	1	Washer-Belleville
32	3296-29	2	Nut-Lock, NI
33	3296-42	3	Nut-Lock, NI
34	3296-47	2	Nut-Lock, NI
35	32144-10	1	Screw-HWH

Lever Chute Control Assembly

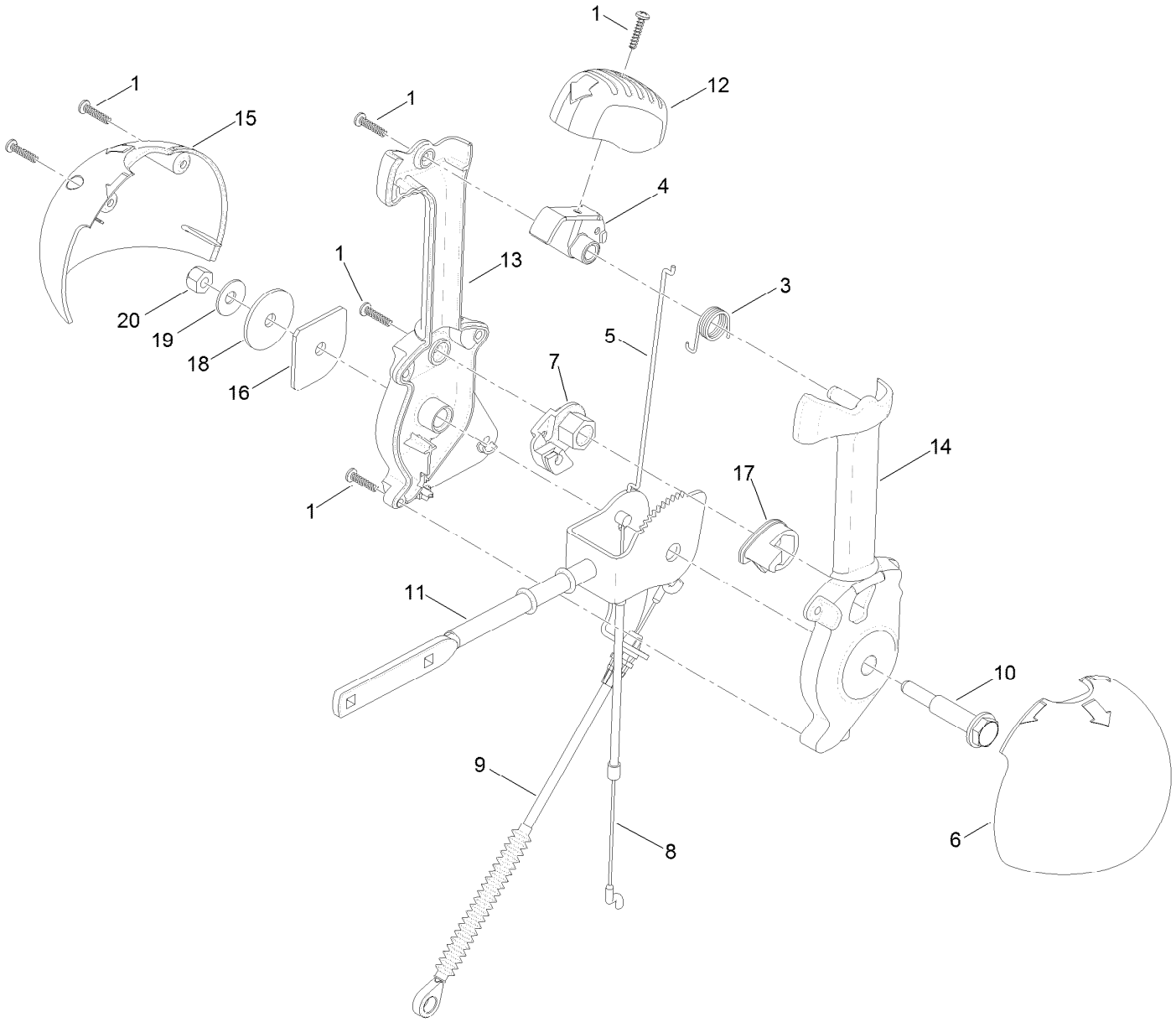

Lever Chute Control Assembly (continued)

Ref.	Part Number	Qty.	Description
1	94-4496	6	Screw-PPH
3	105-9982	1	Spring-Torsion
4	105-9984	1	Trigger-Latch
5	105-9985	1	Link-Latch
6	105-9986	1	Cover-Lever, Chute (LH)
7	105-9988	1	Lever-Cable, Deflector
8	125-1113	1	Cable-Release, Chute
9	105-9990	1	Cable-Control, Deflector
10	105-9995	1	Screw-Shoulder
11	106-4479	1	Rod-Control, Chute
12	106-7280	1	Cap-Lever
13	106-7281	1	Lever-Control, Chute (RH)
14	106-7282	1	Lever-Control, Chute (LH)
15	106-7292	1	Cover-Lever, Chute (RH)
16	106-7295	1	Plate-Friction
17	106-7310	1	Pawl-Latch
18	107-3002	1	Washer-Nylon
19	3290-456	1	Washer-Belleville
20	3296-29	1	Nut-Lock, NI

Handle Assembly

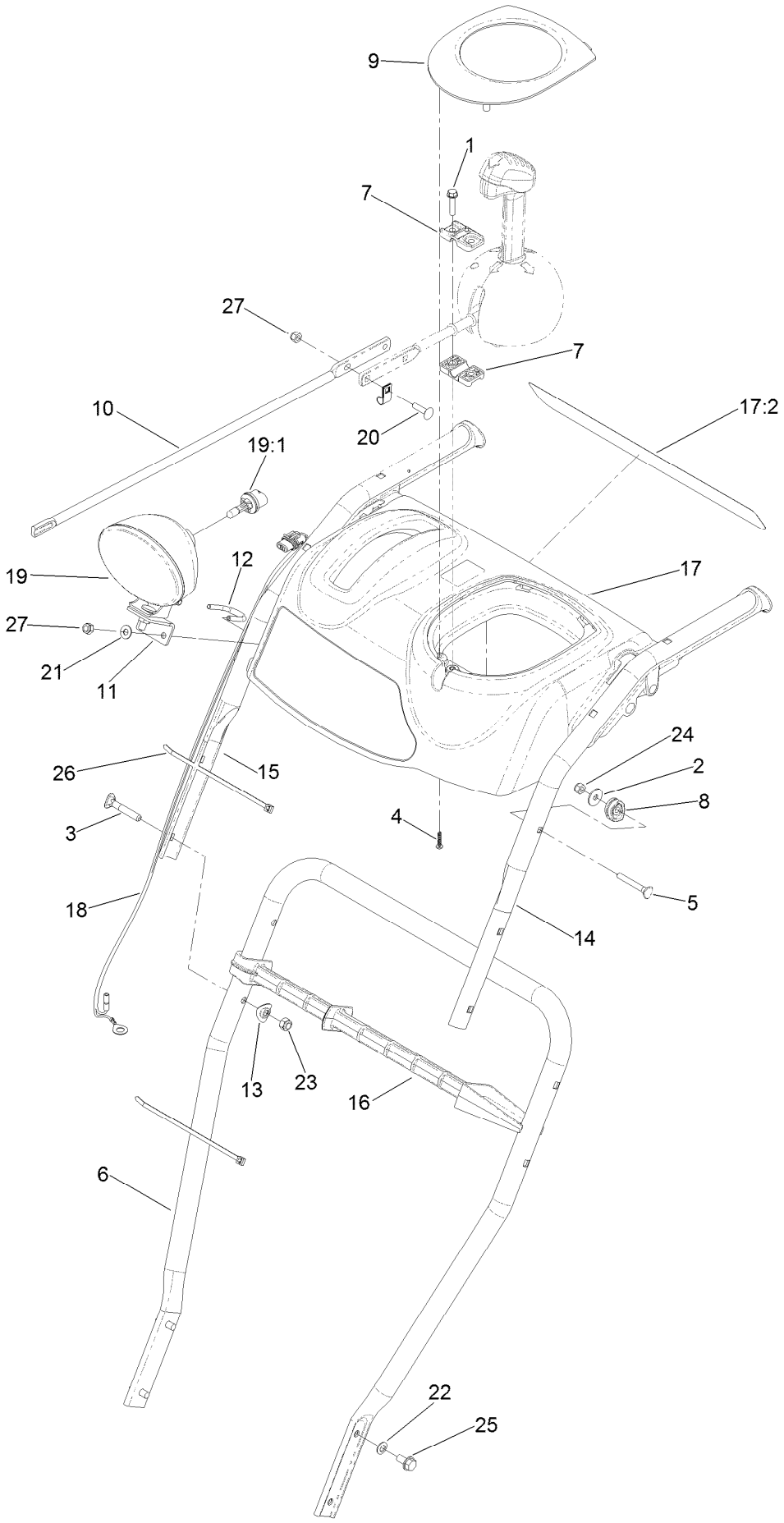

Handle Assembly (continued)

Ref.	Part Number	Qty.	Description
1	46-8092	2	Screw-Plastite
2	87-6630	2	Washer-Plain
3	92-2260	4	Screw-Handle
4	94-4496	2	Screw-PPH
5	95-4453	2	Screw
6	105-9981-03	1	Handle-Lower
7	105-9987	2	Support-Rod
8	106-4509	2	Clamp-Cable
9	106-4586	1	Cover-Panel, Control
10	106-7283	1	Rod-Chute, Front
11	107-1020-03	1	Bracket-Light
12	107-3024	1	Clamp
13	107-3844	4	Washer
14	127-5952-03	1	Handle-Upper, LH
15	127-5953-03	1	Handle-Upper, RH
16	110-3408	1	Stick-Cleanout
17	112-6633	1	Panel-Control
17:2	112-6627	1	Decal-Warning
18	120-3062	1	Harness-Wire, Headlight
19	120-3074	1	Headlamp ASM
19:1	120-3075	1	Lamp-12 Volt
20	3229-30	2	Screw-CARR
21	3256-1	2	Washer-Flat
22	3290-475	4	Washer-Belleville
23	3296-72	4	Nut-Lock, NI
24	3296-73	2	Nut-Lock, NI
25	32144-14	4	Screw-HWHTF
26	614249	2	Tie-Cable
27	3296-73	4	Nut-Lock, NI

Control Assembly

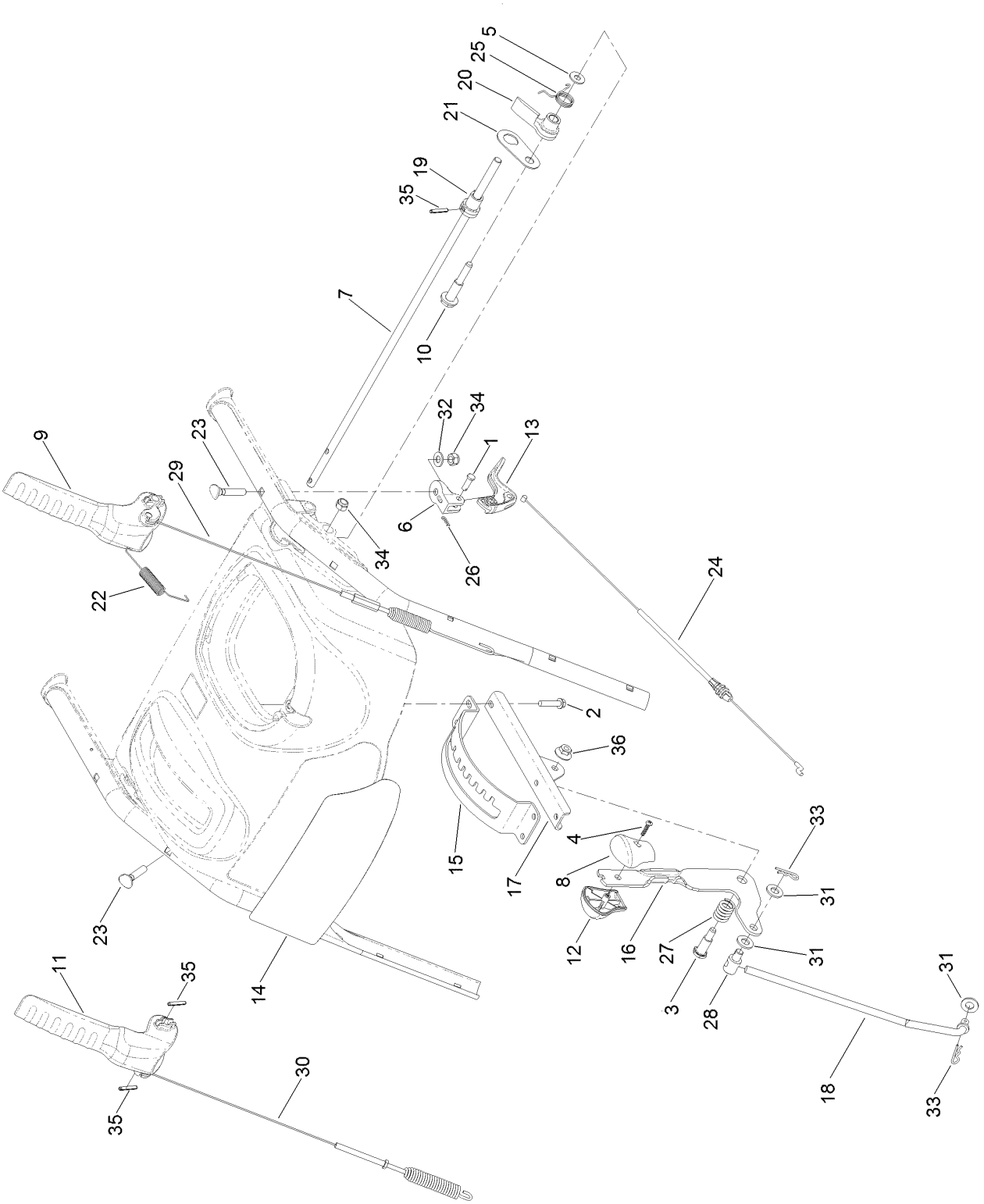

Control Assembly (continued)

Ref.	Part Number	Qty.	Description
1	1-808265	2	Pin-Clevis
2	46-8092	4	Screw-Plastite
3	63-2650	1	Screw-Shoulder
4	94-4496	1	Screw-PPH
5	98-3499	1	Washer-Flat
6	105-9980	2	Mount-Clutch, Lever
7	105-9996	1	Rod-Lockout
8	105-9999	1	Knob-Shift, LH
9	106-4410	1	Lever-Traction
10	106-4412	1	Screw-Shoulder
11	106-4413	1	Lever-Auger
12	106-4423	1	Knob-Shift, RH
13	106-4505	2	Lever-Clutch
14	121-6644	1	Decal-Control Panel
15	106-7277-03	1	Guide-Selector, Speed
16	106-7278-03	1	Selector-Speed
17	130-9775-03	1	Bracket-Selector, Speed
18	107-1005	1	Rod-Shift
19	107-1043	1	Cam-Lockout
20	108-0023	1	Latch-Lockout
21	107-3000	1	Link-Lockout
22	107-3001	1	Spring-Tension
23	107-3018	4	Screw-Handle
24	107-8896	2	Cable-Clutch
25	108-0024	1	Spring-Torsion
26	108-2992	2	Pin-Hair
27	108-7313	1	Spring-Compression
28	110-3446	1	Trunnion-Rod
29	120-0132	1	Cable-Traction
30	120-3086	1	Cable-Auger
31	3256-24	3	Washer-Flat
32	3256-70	4	Washer-Flat
33	3290-307	2	Pin-Cotter
34	3296-72	5	Nut-Lock, NI
35	32121-125	3	Pin-Spring
36	32128-13	1	Nut-HHF

Wheel Clutch Assembly

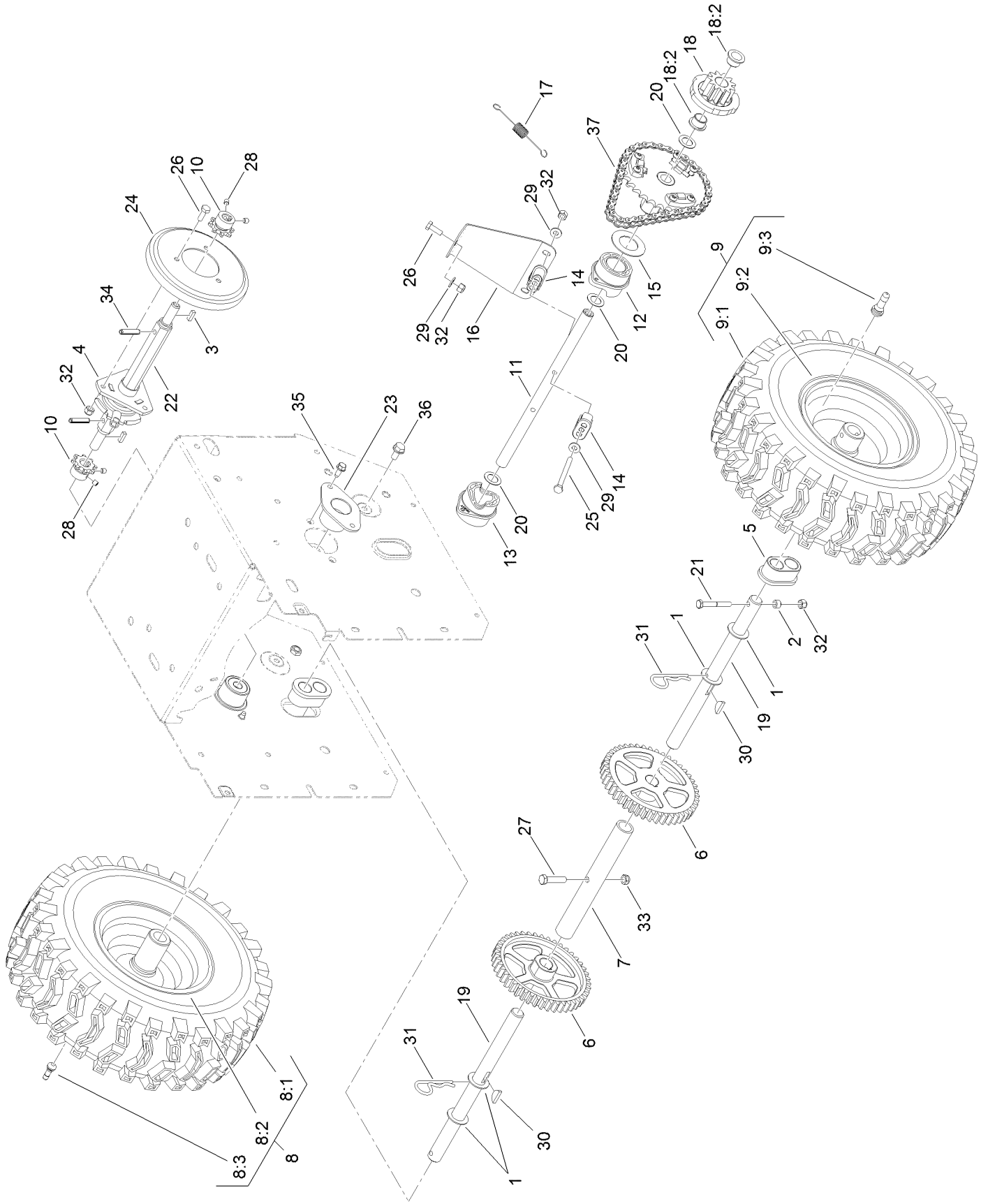

Wheel Clutch Assembly (continued)

Ref.	Part Number	Qty.	Description
1	3-8664	4	Washer-Thrust
2	55-9370	2	Spacer-Blade, Rotor
3	94-8850	2	Key-Square
4	106-4434	1	Trunnion-Hex
5	106-4558	2	Bearing-Axle
6	106-4572	2	Gear-Axle, 44 Tooth
7	106-7259	1	Tube-Axle
8		1	RH Wheel And Tire ASM ●
8:1	121-6610	1	Rim-Tire
8:2	121-6611	1	Tire
8:3	232-27	1	Stem-Valve
9		1	LH Wheel And Tire ASM ●
9:1	121-6610	1	Rim-Tire
9:2	121-6611	1	Tire
9:3	232-27	1	Stem-Valve
10	106-7317	2	Sprocket-8 Tooth
11	107-8883	1	Shaft-Intermediate
12	107-8887	1	Collar-Shift, LH
13	107-8888	1	Collar-Shift, RH
14	107-8889	4	Guide-Collar
15	107-8891	2	Washer-Thrust
16	107-8892-03	1	Brace-Collar, Shift
17	107-8893	2	Spring-Extension
18	107-8894	2	11T Gear ASM
18:2	108-2973	2	Bushing-Flange
19	107-8898	2	Shaft-Axle
20	108-0015	4	Washer-Flat
21	108-2975	2	Screw-HH
22	108-7314	1	Shaft-Hex
23	108-7319	2	Retainer-Bearing
24	119-1567	1	Wheel-Friction
25	321-23	2	Screw-HH
26	321-4	4	Screw-HH
27	322-17	1	Screw-HH
28	3245-32	4	Screw-HSH
29	3256-22	5	Washer-Flat
30	3257-7	2	Key-Woodruff
31	3290-343	2	Pin-Hair
32	3296-42	8	Nut-Lock, NI
33	3296-47	1	Nut-Lock, NI
34	32121-9	2	Pin-Roll, Slotted
35	32144-10	4	Screw-HWH
36	32144-14	2	Screw-HWHTF
37	108-0016	2	Chain-Roller
37	2710-6	2	Link-Connecting

● Not serviced separately

Wheel Clutch Sprocket Assembly

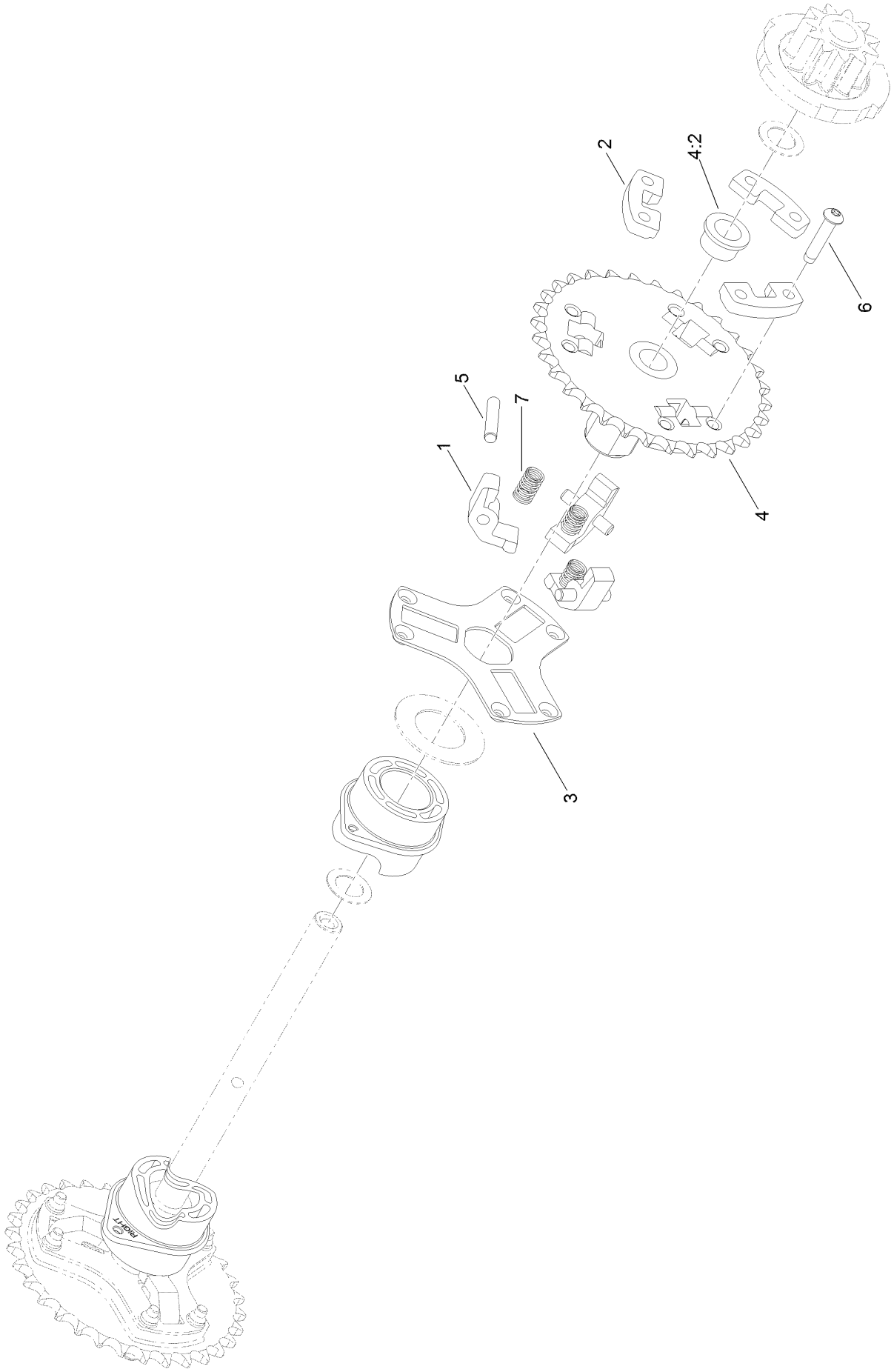

Wheel Clutch Sprocket Assembly (continued)

Ref.	Part Number	Qty.	Description
1	107-8879	6	Pawl-Clutch
2	107-8880	6	Support-Pawl
3	107-8886	2	Retainer-Pin, Pawl
4	107-8895	2	32T Sprocket ASM
4:2	108-2973	2	Bushing-Flange
5	107-8899	6	Pin-Dowel
6	108-0035	12	Screw-Torx Button Head
7	107-8885	6	Spring-Compression

Attachments and Accessories

For 38824 Power Max Heavy Duty 1028 OXE Snowthrower

Product Name	Model/Part
Weight Kit	107-3815
Toro Snow Oil 0W30 Synthetic 20-Ounce Bottle	38913
Snow Cab Kit	127-5960
Toro 2-Stage Cover	490-7466
28in Drift Breaker	107-3817
Plain 2-Stage Cover	490-7467
Heavy-Duty Skid Kit	125-1104
Tire Chain Kit, for 16in Tires	38215
Non-Marking Skid Kit	38211

Notes:



Count on it.