Form No. 3406-992 Rev A

Valve Conversion Kit

Multi Pro® 5800-D Turf Sprayer

Model No. 132-4276

Installation Instructions

The valve conversion kit is a kit that replaces the sprayer control valves and related components for a turf spray application vehicle.

You may contact Toro directly at www.Toro.com for product safety and operation training materials, accessory information, help finding a dealer, or to register your product.

⚠ WARNING

CALIFORNIA
Proposition 65 Warning

This product contains a chemical or chemicals known to the State of California to cause cancer, birth defects, or reproductive harm.

Use of this product may cause exposure to chemicals known to the State of California to cause cancer, birth defects, or other reproductive harm.

Safety

⚠ WARNING

Chemical substances used in the spray system may be hazardous and toxic to you, bystanders, animals, plants, soils, or other property.

- **Carefully read and follow the chemical warning labels and material safety data sheets (MSDS) for all chemicals used and protect yourself according to the chemical manufacturer's recommendations. For example, use appropriate personal protective equipment (PPE), including face and eye protection, gloves, or other equipment to guard against personal contact with a chemical.**
- **There may be more than 1 chemical used and information on each chemical should be assessed.**
- **Refuse to operate or work on the sprayer if this information is not available.**
- **Before working on a spray system, ensure that the system has been triple rinsed and neutralized according to the recommendations of the chemical manufacturer(s) and that all the valves have been cycled 3 times.**
- **Verify that there is an adequate supply of clean water and soap nearby, and immediately wash off any chemicals that contact you.**

© 2016—The Toro® Company
8111 Lyndale Avenue South
Bloomington, MN 55420

Register at www.Toro.com.

CE

Original Instructions (EN)
Printed in the USA
All Rights Reserved

3406-992 A

Safety and Instructional Decals

Safety decals and instructions are easily visible to the operator and are located near any area of potential danger. Replace any decal that is damaged or missing.



127-6976

1. Decrease
2. Increase

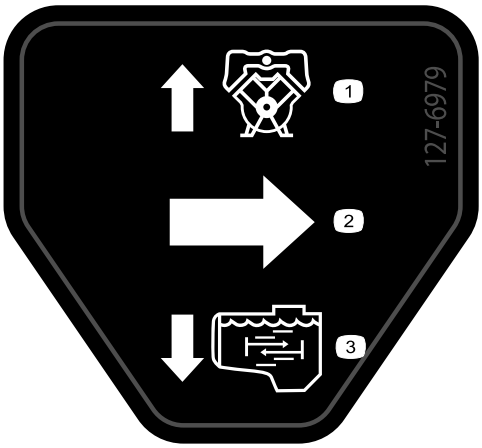

127-6979

1. Pump-return flow
2. Flow
3. Agitation flow

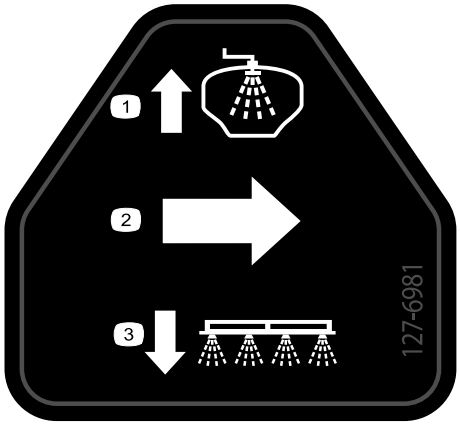

127-6981

1. Bypass-return flow
2. Flow
3. Boom spray

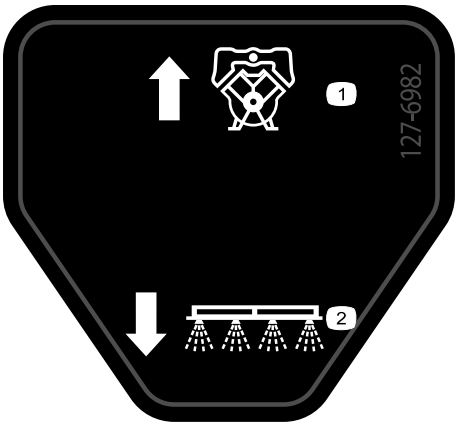

127-6982

1. Pump return flow
2. Boom spray

Installation

Loose Parts

Use the chart below to verify that all parts have been shipped.

Procedure	Description	Qty.	Use
1	No parts required	–	Prepare to install the kit.
2	No parts required	–	Disconnect the rear wire harness from the optional attachment.
3	No parts required	–	Disconnecting the pressure-sense tube for the dash gauge.
4	Rear wire harness	1	Remove the rear wire harness for the machine.
5	No parts required	–	Remove the bypass, drain, and agitation components.
6	No parts required	–	Disassembling the supply hose.
7	No parts required	–	Remove the valve support and boom-section valves.
8	Sprayer-valve assembly Cover—52 mm (2-1/16 inches) Gasket—25 x 35 mm (1 x 1-3/8 inches) Flange clamp—40 to 64 mm (1-9/16 to 2-1/2 inches) Valve mount Flange-head bolts (5/16 x 1 inch) Flange locknuts (5/16 inch)	1 1 1 1 1 5 5	Assemble the valves to the valve mount.
9	No parts required	–	Install the valve mount to the machine.
10	Screw (6-32 x 5/8 inch) Handle Agitation throttle valve Bracket (nylon) Agitation-valve bracket Bolt (6 x 12 mm) Agitation supply hose Agitation-nozzle assembly Agitation bypass hose—25 x 254 mm (1 x 10 inches) Gasket—25 x 35 mm (1 x 1-3/8 inches) Flange clamp—40 to 64 mm (1-9/16 to 2-1/2 inches)	1 1 1 1 1 1 1 1 1 1 1	Install the agitation shutoff valve, nozzles, and hoses.
11	Manifold supply hose (1 x 25 inches) Gasket—25 x 35 mm (1 x 1-3/8 inches) Flange clamp—40 to 64 mm (1-9/16 to 2-1/2 inches)	1 1 1	Install the manifold supply hose.

Procedure	Description	Qty.	Use
12	Eductor shutoff valve	1	Install the shutoff valve and hoses for the chemical premix kit.
	Shutoff-valve bracket	1	
	Flange locknuts (1/4 inch)	1	
	Gasket—25 x 35 mm (1 x 1-3/8 inches)	1	
	Flange clamp—40 to 64 mm (1-9/16 to 2-1/2 inches)	1	
	Agitation bypass hose—25 x 337 mm (1 x 13-1/4 inches)	1	
	Gasket—25 x 35 mm (1 x 1-3/8 inches)	1	
	Flange clamp—40 to 64 mm (1-9/16 to 2-1/2 inches)	1	
	Pressure-relief hose—2.5 x 29.8 cm (1 x 11-3/4 inches)	1	
	Sprayer supply hose—2.5 x 48.6 cm (1 x 19-1/8 inches)	1	
	Eductor supply hose—2.5 x 156.5 cm (1 x 61-5/8 inches)	1	
13	Bypass and drain-hose assembly	1	Install the section bypass hose and drain-hose assembly.
	Support clamp	1	
	Flange-head bolt (5/16 x 3/4 inch)	1	
	Washer (5/16 inch)	1	
14	Supply hose—left boom section—2 x 205 cm (3/4 x 80-13/16 inches)	1	Install the sprayer nozzle hoses.
	Supply hose—center boom section— 2 x 58 cm (3/4 x 22-13/16 inches)	1	
	Supply hose—right boom section—2 x 170 cm (3/4 x 66-13/16 inches)	1	
15	Flange shutoff valve	1	Install the shutoff valve and hose for the optional spray gun kit or electric hose-reel kit.
	Bracket (nylon)	1	
	90° elbow (with pressure port)	1	
	Gasket—25 x 35 mm (1 x 1-3/8 inches)	1	
	Flange clamp—40 to 64 mm (1-9/16 to 2-1/2 inches)	1	
	Washer (5/16 x 13/16 inch)	4	
	Bolt (6 x 16 mm)	4	
	Hose clamp	2	
	Quick-connect fitting (socket)	1	
	Straight barbed fitting (1/2 inch)	1	
	Hose—1.3 x 762 cm (1/2 x 300 inches)	1	
	Hose—1.3 x 180 cm (1/2 x 71 inches)	1	
	Cable ties	3	
16	Rear wire harness	1	Assemble the rear wiring harness to the machine.
	Cable tie	3	
17	No parts required	–	Connect the rear wire harness.
18	Jumper harness (optional spray gun kit or electric hose-reel kit)	1	Connect the rear wire harness to the Optional Attachments
19	No parts required	–	Connect the pressure-sense tube for the dash gauge.
20	No parts required	–	Complete the installation of the valve conversion kit.

1

Preparing to Install the Kit

No Parts Required

Preparing the Machine

1. Move the machine to a level surface (Figure 1).

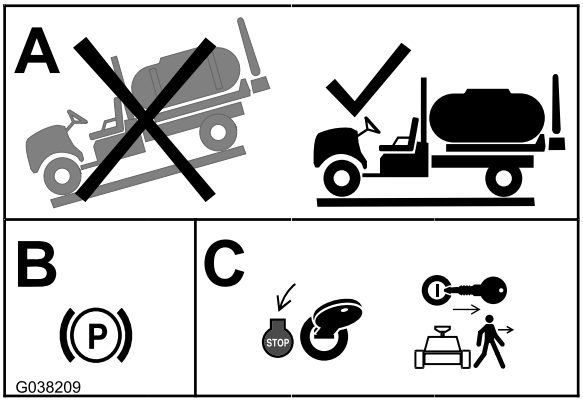

Figure 1

2. Set the parking brake (Figure 1).
3. Shut off the engine and remove the key (Figure 1).

Preparing the Sprayer and Optional Rinse Tank

1. Clean the sprayer; refer to Cleaning the Sprayer in the *Operator's Manual* for the machine.

   Important: You must completely empty the sprayer tank before installing the valve conversion kit.

2. **For machines with the optional tank-rinse kit, perform the following:** Pump the water from the rinse tank into the sprayer tank; refer to Operating the Rinse Kit in the *Installation Instructions* for the Tank-Rinse Kit.
3. Drain the water from the sprayer tank (Figure 2); refer to Cleaning the Sprayer in the *Operator's Manual* for the machine.

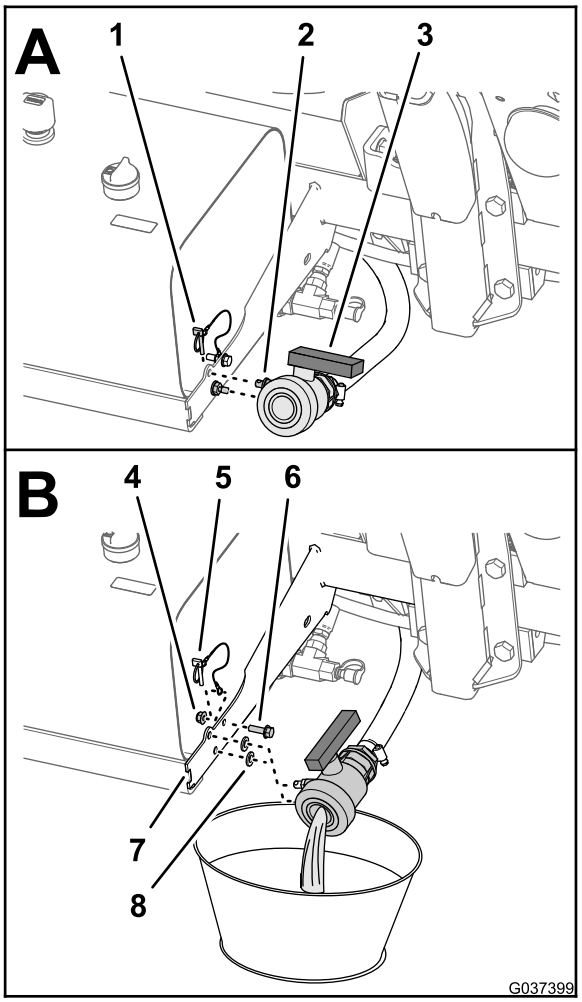

Figure 2

1. Lynch pin
2. Mount peg
3. Drain valve
4. Flange locknut (5/16 inch)
5. Cable (lynch pin)
6. Flange-head bolt (5/16 x 1 inch)
7. Support (hydraulic tank)
8. Rubber washer

4. Remove the flange-head bolt (5/16 x 1 inch) and flange locknut (5/16 inch) that secure the cable of the lynch pin to the hydraulic-tank support (Figure 2).

   Note: Retain the lynch pin, flange locknut, flange-head bolt, and 2 rubber washers for installation Installing the Drain Valve (page 36).

Disconnecting the Battery

1. Extend the left and right boom sections to the horizontal position.
2. Rotate the KEY SWITCH to the OFF position, and remove the key; refer to the *Operator's Manual*.
3. Remove the battery cover and disconnect the negative (black—ground) cable from the battery post (Figure 3 and Figure 4).

⚠ WARNING

Electrical sparks can cause the battery gasses to explode, resulting in personal injury.

Incorrect battery cable routing could damage the sprayer and cables, causing sparks.

- **Always disconnect the negative (black) battery cable before disconnecting the positive (red) cable.**
- **Always connect the positive (red) battery cable before connecting the negative (black) cable.**

Battery terminals or metal tools could short against metal sprayer components, causing sparks.

- **When removing or installing the battery, do not allow the battery terminals to touch any metal parts of the sprayer.**
- **Do not allow metal tools to short between the battery terminals and metal parts of the sprayer.**
- **Always keep the battery strap in place to protect and secure the battery.**

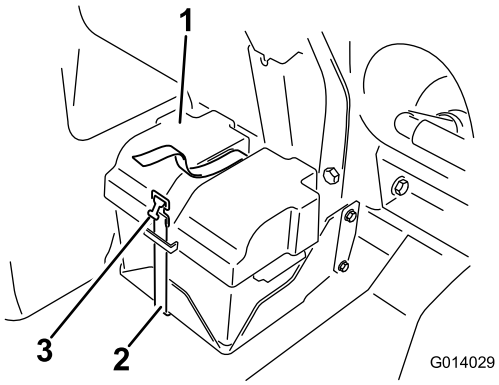

Figure 3

1. Battery cover
2. Strap
3. Buckle

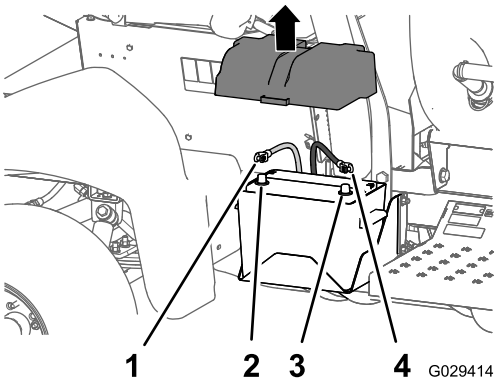

Figure 4

1. Positive battery cable
2. Positive battery post
3. Negative battery post
4. Negative battery cable

4. Disconnect the positive (red) cable from the battery post (Figure 4).
5. Tilt both seats forward and secure them by moving the prop rods into the detents at the end of the slots at the center-console base.
6. Allow the engine to cool completely.

2

Disconnecting the Rear Wire Harness from the Optional Attachments

No Parts Required

Disconnecting the Wire Harness from the Optional Spray Gun Kit or Electric Hose-Reel Kit

1. At the back of the sprayer tank, locate the wire harness for the spray gun kit or electric hose-reel kit (Figure 5).

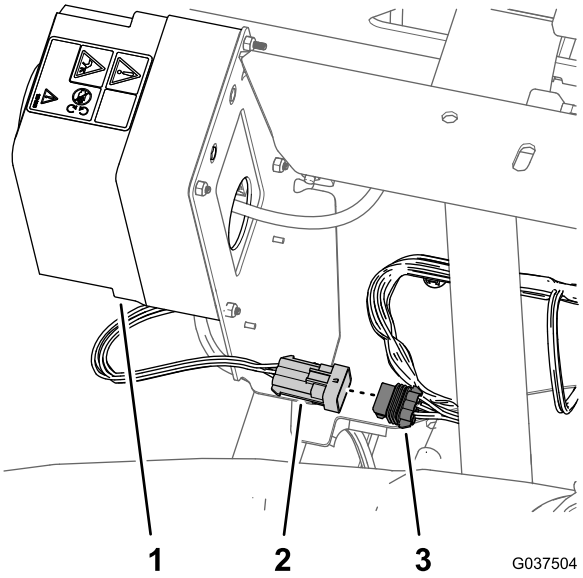

Figure 5

1. Control box (spray gun kit or electric hose-reel kit)
2. 6-pin connector (harness—spray gun kit or electric hose-reel kit)
3. 6-socket (rear wire harness)

2. Disconnect the 6-pin connector of the harness for the spray gun kit or electric hose reel-kit from the 6-socket of the rear wire harness (Figure 5).

Disconnecting the Compressor for the Foam-Marker Kit

1. At the back of the foam-marker tank, locate the wire harness at the compressor (Figure 6).

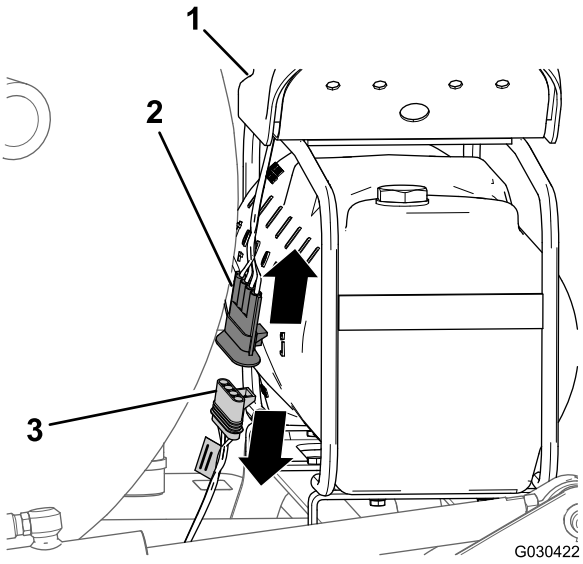

Figure 6

1. Compressor
2. 4-pin connector (wire harness for the compressor)
3. 4-socket connector (wire harness for the finishing kit)

2. Disconnect the 4-pin connector of the compressor harness from the from the 4-socket connector of the rear wire harness of the machine (Figure 6).

Disconnecting the Pump for the Tank-Rinse Kit

1. At the back of the machine, press together the sides of the rinse-pump cover and lift the cover up until the tabs of the cover clear the slots in the saddle plate, and remove the cover from the machine (Figure 7).

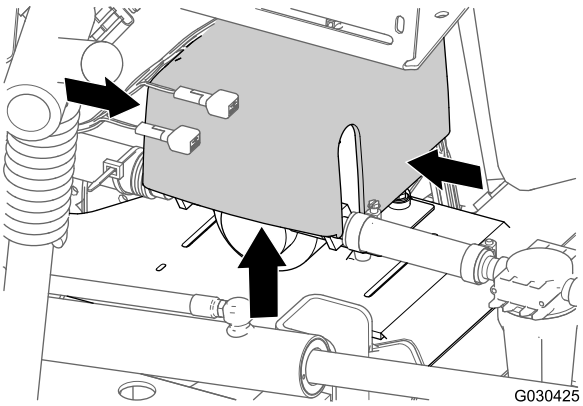

Figure 7

2. Disconnect the 6-pin connector of the rinse-pump harness from the 6-socket connector of the rear wire harness (Figure 8).

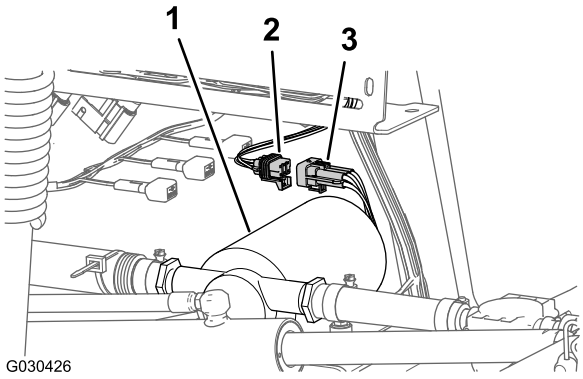

Figure 8

1. Rinse pump
2. 6-socket connector (rear wire harness)
3. 6-pin connector (rinse-pump harness)

Disconnecting the Wire Harness from the Optional Pro-Control Kit

Disconnect the 3-pin connector of the flow-meter harness from the 3 socket connector of the rear wire harness of the machine (Figure 9).

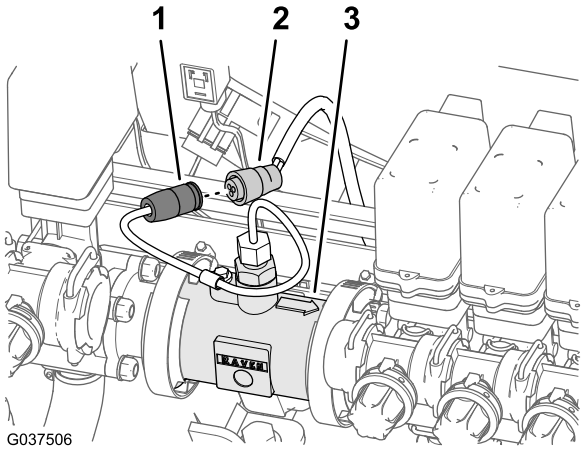

Figure 9

1. 3-pin connector (flow-meter harness)
2. 3 socket connector (rear wire harness—machine)
3. Flow meter

3

Disconnecting the Pressure-Sense Tube for the Dash Gauge

No Parts Required

Disconnecting the Pressure-Sense Tube for the Dash Gauge—Machines Without an Optional Hose-Reel Kit

Note: If your machine is equipped with an optional spray gun kit, refer to Disconnecting Pressure-Sense Tube and Supply Hose—Optional Spray-Gun Kit or Electric Hose-Reel Kit (page 9).

1. Press in the collar for the tube coupler in the ported-cap fitting of the right-boom-section valve (Figure 10).

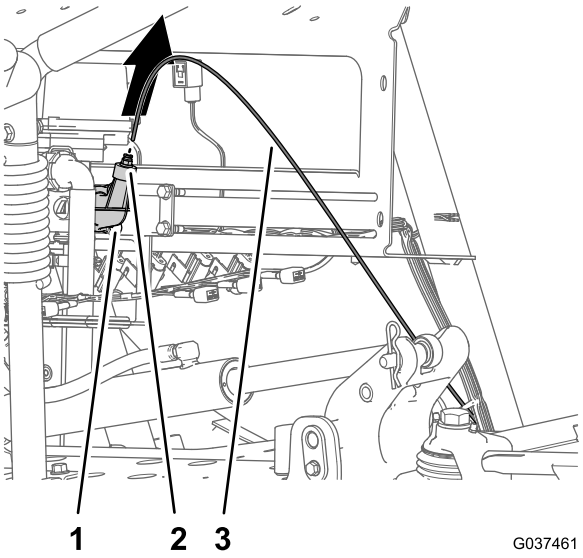

Figure 10

1. Tube coupler (end cap of the right-boom-section valve)
2. Ported-cap fitting
3. Pressure-sense tube

2. Pull the pressure-sense tube for the dash gauge out of the tube coupler (Figure 10).

Disconnecting Pressure-Sense Tube and Supply Hose—Optional Spray-Gun Kit or Electric Hose-Reel Kit

1. Press in the collars for the tube couplers in the T-fitting in the pressure port fitting (Figure 11 or Figure 12).

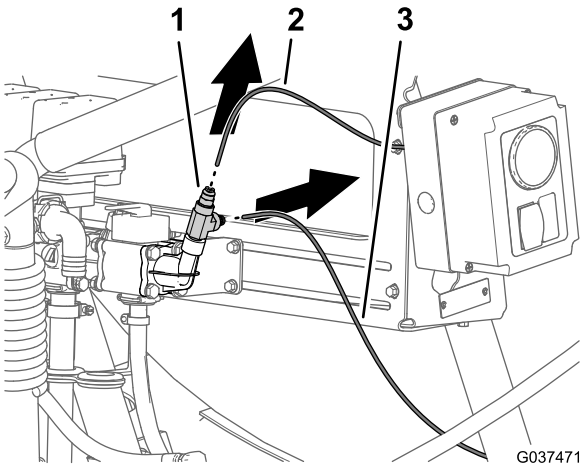

Figure 11

Optional Spray Gun Kit

1. Tube coupler (pressure fitting—bypass valve)
2. Pressure-sense tube (spray gun pressure gauge)
3. Pressure-sense tube (dash-pressure gauge)

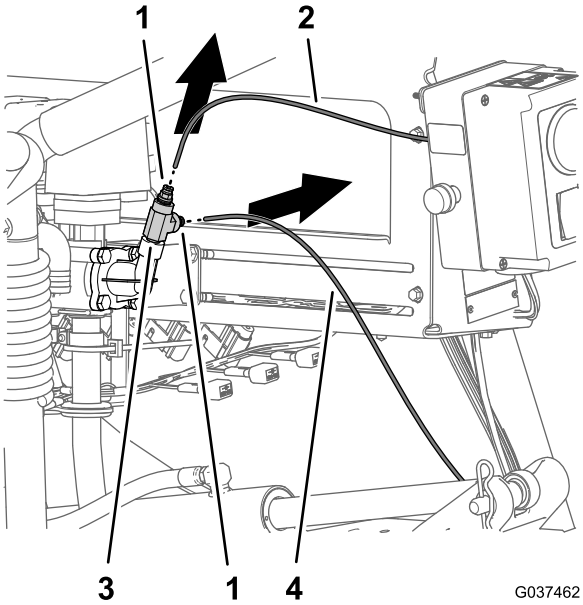

Figure 12

Electric Hose-Reel Kit

1. Tube coupler (pressure fitting—bypass valve)
2. Pressure-sense tube (spray gun pressure gauge)
3. T-fitting
4. Pressure-sense tube (dash-pressure gauge)

2. Remove the pressure-sense tube for the dash gauge from the tube coupler (Figure 11 or Figure 12).
3. Remove the pressure-sense tube for the spray gun pressure gauge or from the tube coupler (Figure 11 or Figure 12).
4. Remove the T-fitting from the pressure-port fitting (Figure 13).

Note: Retain the T-fitting for installation in Connecting the Pressure Sense-Tube—Optional Spray Gun Kit or Optional Electric Hose-Reel Kit (page 52).

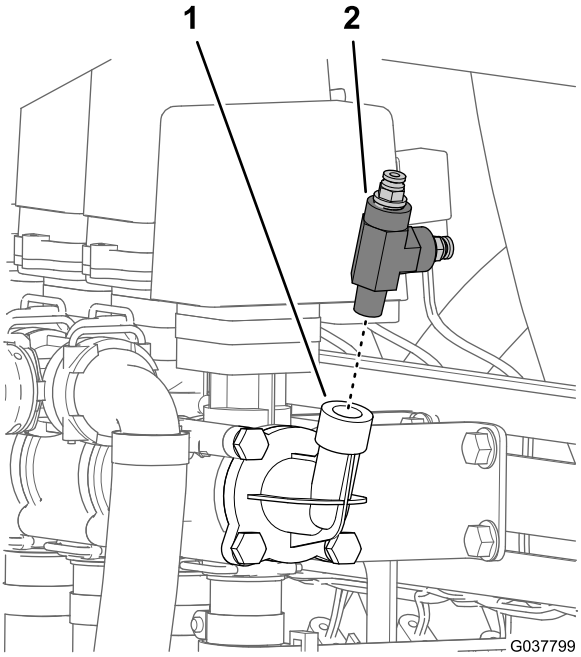

Figure 13

1. Pressure-port fitting tube
2. T-fitting

4

Removing the Rear Wire Harness for the Machine

Parts needed for this procedure:

1	Rear wire harness

Disconnecting the Front and Rear Wire Harnesses

Note: Use a machine hoist when disconnecting the front and rear wire harnesses.

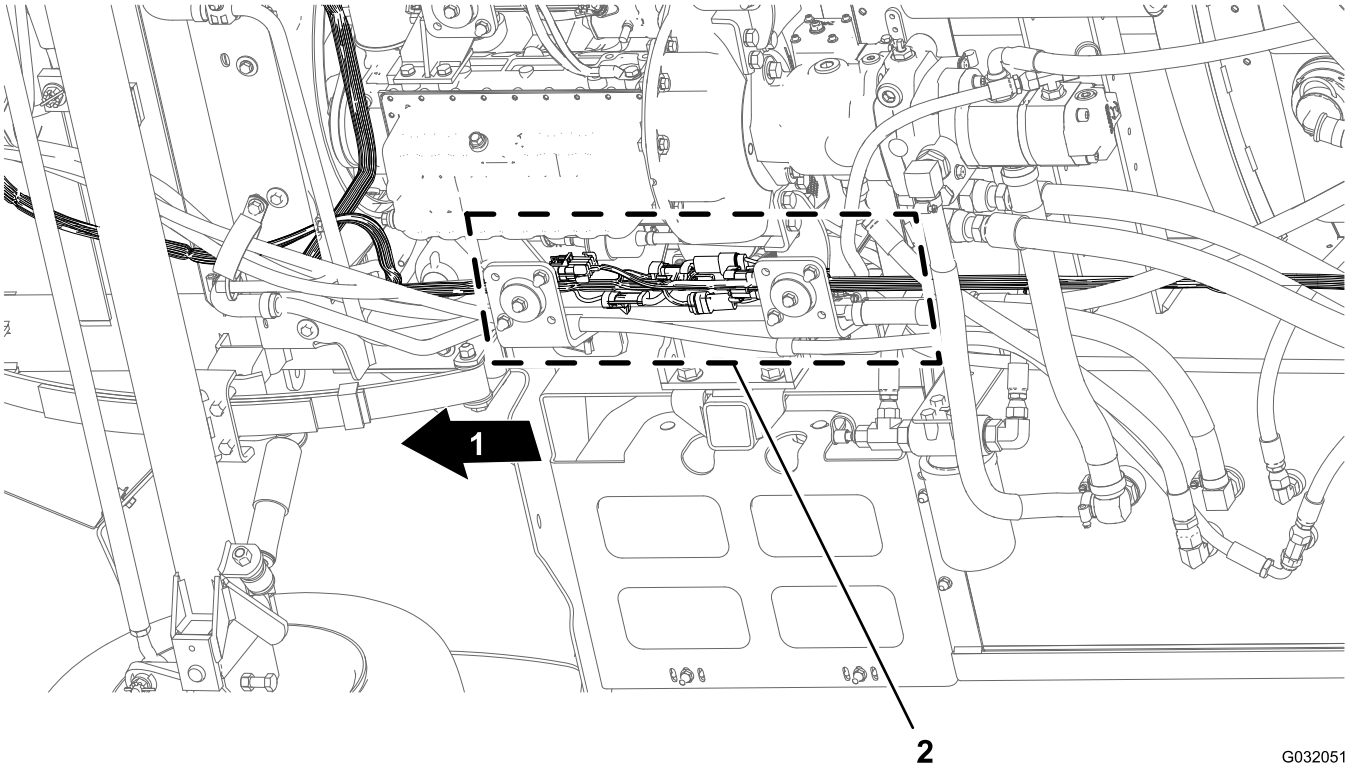

Figure 14

1. Front of the machine
2. Connector interfaces (front and rear wire harnesses)

1. From under the machine along the right frame tube, locate the electrical connectors for the front and rear wire harnesses of the machine (Figure 14).
2. Disconnect the 6 pairs of connectors between the front and rear wire harnesses as shown in Figure 15 through Figure 19.

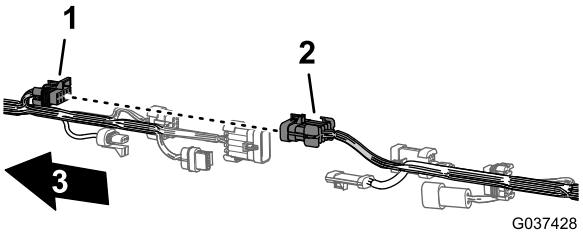

Figure 15

1. 10-socket connector—sprayer-harness interconnect (front wire harness)
2. 10-pin connector—sprayer-harness interconnect (rear wire harness)
3. Front of the machine

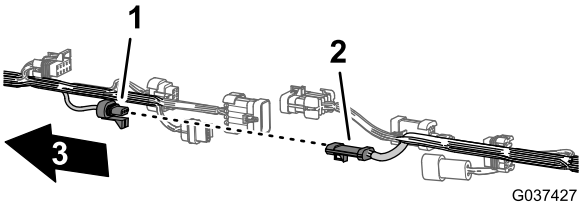

Figure 16

1. 3-socket connector—flow meter (front wire harness)
2. 3-pin connector—flow meter (rear wire harness)
3. Front of the machine

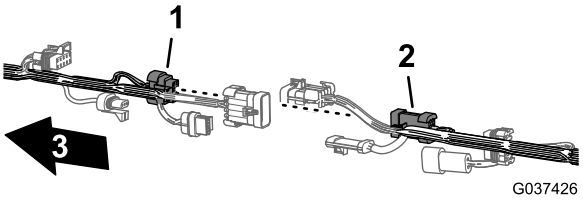

Figure 17

1. 8-socket connector—sprayer-harness interconnect (front wire harness)
2. 8-pin connector—sprayer-harness interconnect (rear wire harness)
3. Front of the machine

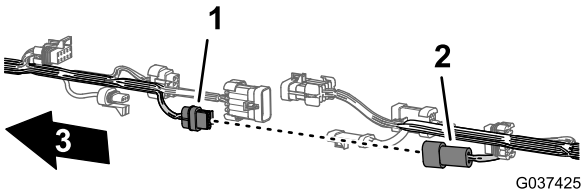

Figure 18

1. 2-socket connector—rinse pump (front wire harness)
2. 2-pin connector—rinse pump (rear wire harness)
3. Front of the machine

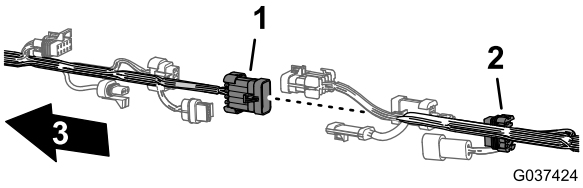

Figure 19

1. 10-pin connector—sprayer-harness interconnect (front wire harness)
2. 10-socket connector—sprayer-harness interconnect (rear wire harness)
3. Front of the machine

3. Remove the 3 push-in fasteners of the rear wire harness that secure the harness at the holes in the right frame tube of the machine (Figure 20).

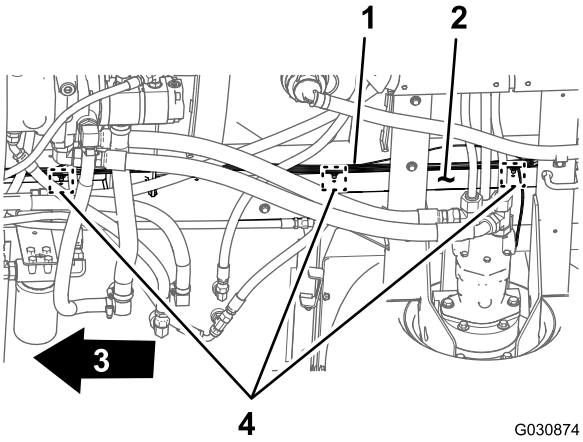

Figure 20

1. Rear wire harness
2. Right frame tube
3. Front of the machine
4. Push-in fastener

Disconnecting the Wire Harness from the Sprayer Components

1. At the back of the machine (between the right frame tube and the right fender), disconnect the 3-pin connector of the speed-sensor harness at the right hydraulic-traction motor from the 3-socket connector of the rear wire harness (Figure 21).

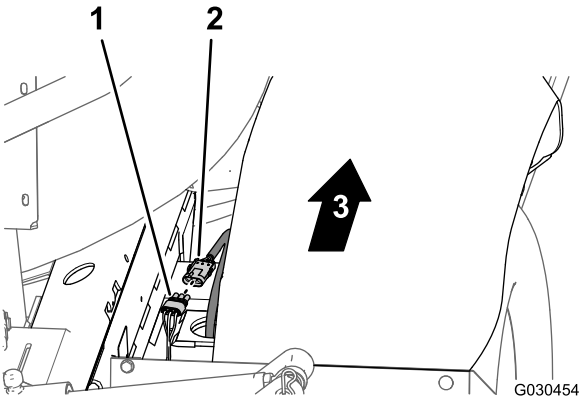

Figure 21

1. 3-socket connector (rear wire harness)
2. 3-pin connector (hydraulic-motor harness
3. Front of the machine

2. At the back of the manifold mount, disconnect the 3-socket connector from the agitation valve and the 3-socket connectors from the 3 boom-section valves (Figure 22).

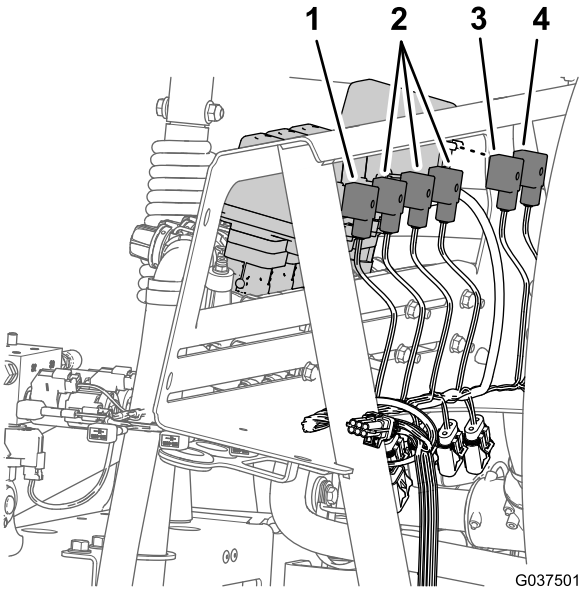

Figure 22

1. 3-socket connectors (SPRAY GUN VALVE)
2. 3-socket connectors (RIGHT SPRAY VALVE / CENTER SPRAY VALVE / RIGHT SPRAY VALVE)
3. 3-socket connector (AGITATION VALVE)
4. 3-socket connector (EDUCTOR VALVE)

3. Remove the push-in fasteners that secure the rear wire harness to the holes at the forward side and lower plate of the manifold mount (Figure 23).

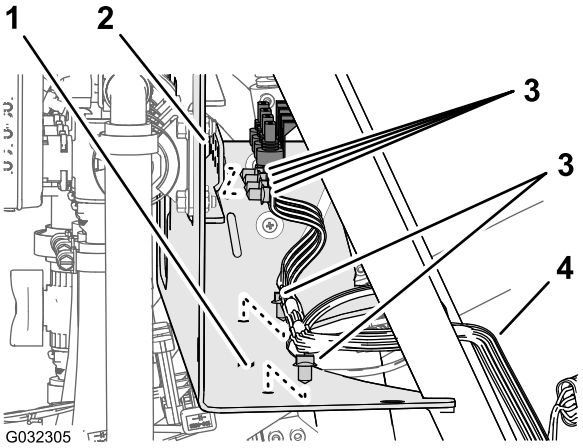

Figure 23

1. Manifold mount (lower plate)
2. Manifold mount (forward side)
3. Push-in fasteners
4. Rear wire harness

4. For machines without the ultra-sonic boom kit—at the back of the machine, disconnect the following 2-socket connectors (Figure 24) for the lift-cylinder manifold as follows:
   - Right—up solenoid
   - Left—up solenoid
   - Enable solenoid
   - Right—down solenoid
   - Left—down solenoid

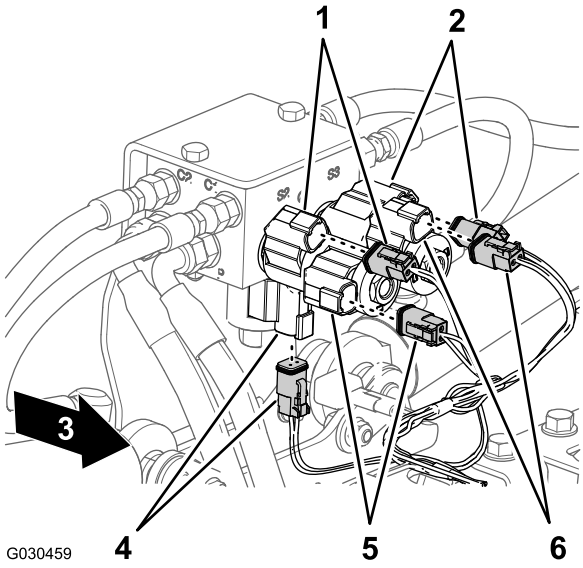

Figure 24

1. Right—up (solenoid and main-harness connector)
2. Left—up (solenoid and main-harness connector)
3. Front of the machine
4. Enable (solenoid and main-harness connector)
5. Right—down (solenoid and main-harness connector)
6. Left—down (solenoid and main-harness connector)

5. At the back of the machine—inboard of the sprayer pump, disconnect the 2-socket connector of the rear wire harness from the 2-pin connector of the relay for the pump (Figure 25).

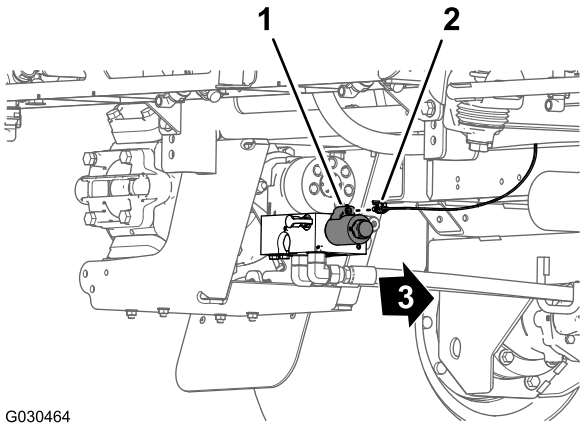

Figure 25

1. 2-pin connector (pump relay)
2. 2-socket connector (rear wire harness)
3. Front of the machine

6. Remove the push-in fastener that secures the rear wire harness (Figure 26) to the holes in the rear cross tube (rearward of the hydraulic-traction motors).

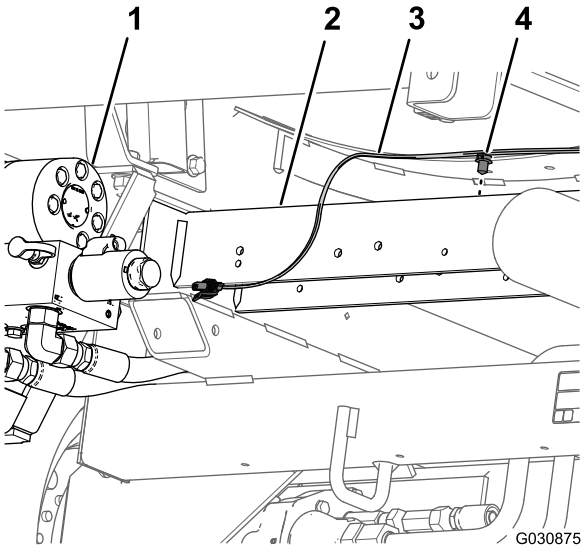

Figure 26

1. Sprayer pump
2. Rear cross tube
3. Rear wire harness
4. Push-in fastener

7. Remove the pressure-sense tube for the dash gauge from the rear wire harness from the machine (Figure 27).

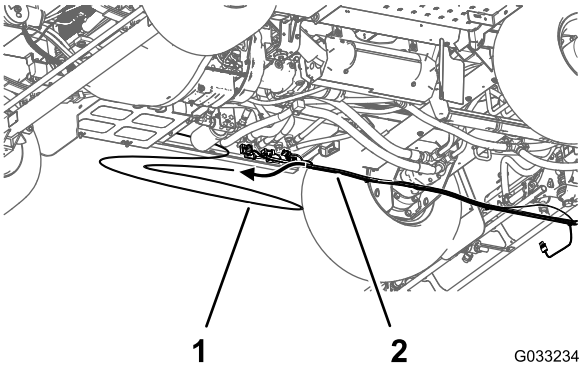

Figure 27

1. Pressure-sense tube (dash gauge)
2. Rear wire harness

8. Remove the rear wire harness from the machine.

Note: You no longer need the rear wire harness that you removed from the machine.

5

Removing the Bypass, Drain, and Agitation Components

No Parts Required

Removing the Bypass and Drain Hoses

1. Remove the retainer that secures the 90° hose fitting to the adapter fitting at the bottom of the sprayer tank (Figure 28).

   Note: Retain the retainer for installation in Installing the Tank Drain Hose (page 35).

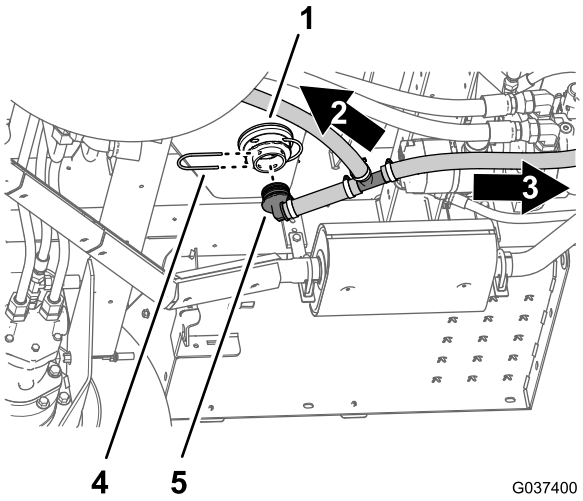

Figure 28

1. Adapter fitting (bottom of the sprayer tank)
2. Toward the bypass valve
3. Retainer
4. Toward the drain valve
5. 90° hose fitting

2. Remove the 90° hose fitting from the adapter fitting (Figure 28).
3. Remove the retainer that secures the 90° hose fitting to the end of the bypass valve for the right boom-segment valve (Figure 29).

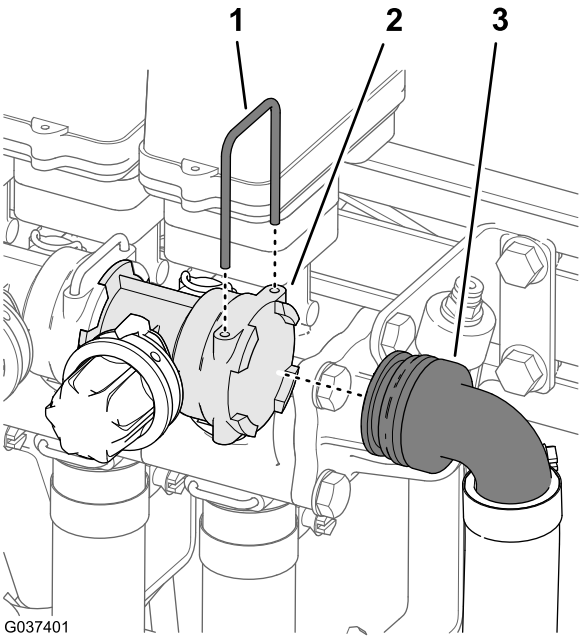

Figure 29

1. Retainer
2. Socket (bypass valve)
3. 90° hose fitting (bypass hose)

4. Remove the 90° hose fitting from the bypass valve (Figure 29).

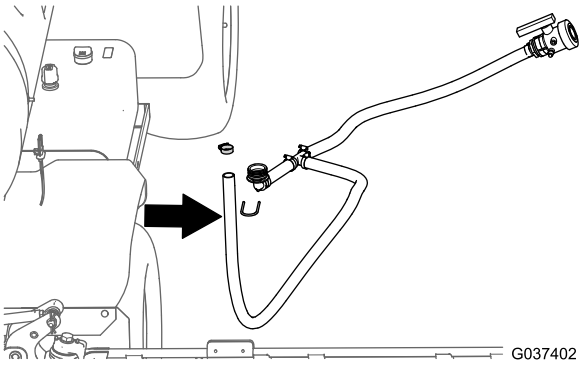

Figure 30

5. Remove the bypass and drain hoses from the machine (Figure 30).
6. Remove the hose clamp that secures the barbed fitting of the drain valve to the drain hose, and remove the fitting from the hose (Figure 31).

   Note: Retain the hose clamp, drain valve and barbed fitting, and retainer for installation Installing the Tank Drain Hose (page 35). You no longer need the bypass and drain hoses.

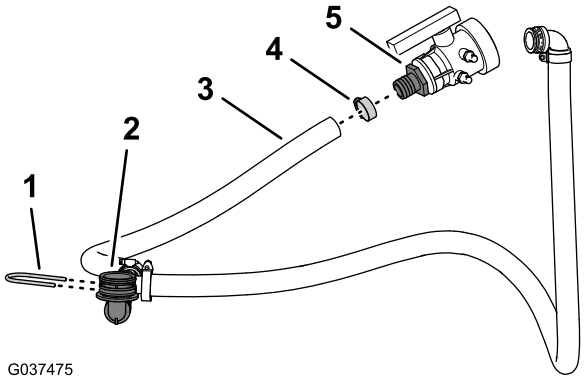

Figure 31

1. Retainer
2. 90° hose fitting
3. Drain hose
4. Hose clamp
5. Barbed fitting (drain valve)

Removing the Agitation Nozzles and Hoses

1. At the sprayer pump, remove the hose clamp that secures the agitation supply hose to the barbed fitting of the ball valve (Figure 32).

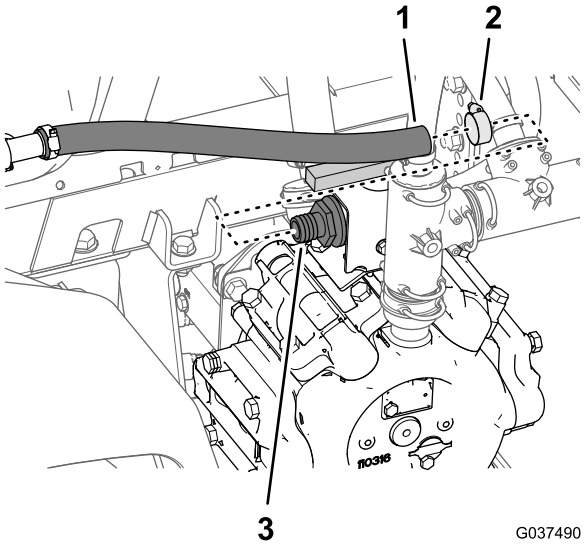

Figure 32

1. Hose (agitation supply)
2. Hose clamp
3. Barbed fitting (ball valve)

2. Remove the agitation supply hose from the barbed fitting (Figure 32).
3. At the side of the tank, remove the 4 retainers that secure the agitation nozzles to the bulkhead fitting in the wall of the tank (Figure 33).

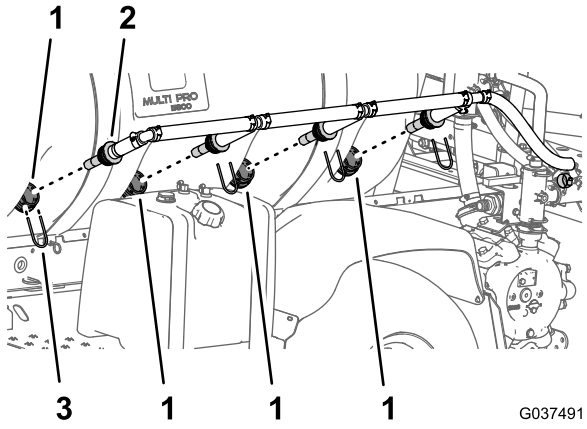

Figure 33

1. Bulkhead fitting
2. Agitation nozzle
3. Retainer

4. Loosen all 4 nozzles from the bulkhead fittings.
5. Remove the nozzles and attached hoses from the machine (Figure 33).

Note: Retain the 4 retainers for installation in Installing the Agitation-Nozzle Assemble and Hoses (page 26). You no longer need the hose clamp, agitation nozzles, and the attached hoses.

Removing the Agitation Throttle Valve

1. At the top of the sprayer pump, remove the 2 flange-head bolt (5/16 x 3/4 inch) that secure the agitation throttle valve to the throttle-valve bracket (Figure 34).

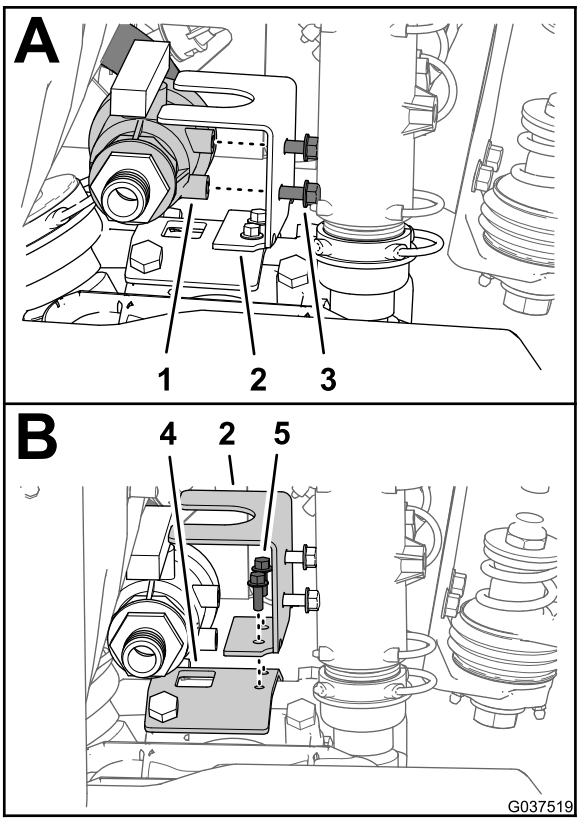

Figure 34

1. Agitation throttle valve
2. Throttle-valve bracket
3. Flange-head bolt (5/16 x 3/4 inch)
4. Sprayer-pump bracket
5. Flange-head bolt (1/4 x 3/4 inch)

2. Remove the 2 flange-head bolt (1/4 x 3/4 inch) that secure the throttle-valve bracket to the sprayer-pump bracket, and remove the bracket from the machine (Figure 34).

   Note: Retain the 2 flange-head bolt (1/4 x 3/4 inch) for installation Assembling the Agitation Throttle Valve (page 25). You no longer need the 2 flange-head bolt (5/16 x 3/4 inch) and agitation throttle valve.

3. Remove the retainer that secures straight barbed fitting of the agitation supply hose to the agitation valve (Figure 35).

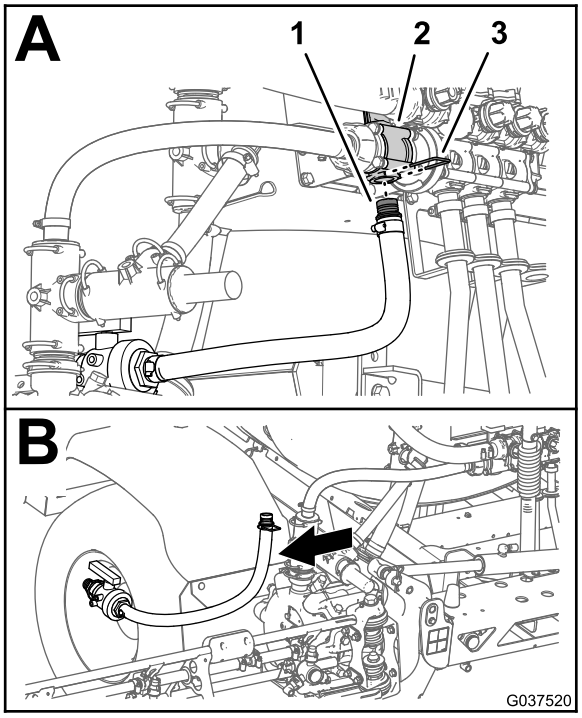

Figure 35

1. Straight barbed fitting
2. Agitation valve
3. Retainer

4. Remove the ball valve and agitation supply hose from the machine (Figure 35).

   Note: You no longer need the ball valve and agitation supply hose.

Removing the Agitation Bypass and Sprayer Supply Hoses

1. Remove the retainer that secures the straight barbed fitting for the agitation bypass hose to the agitation bypass valve (Figure 36).

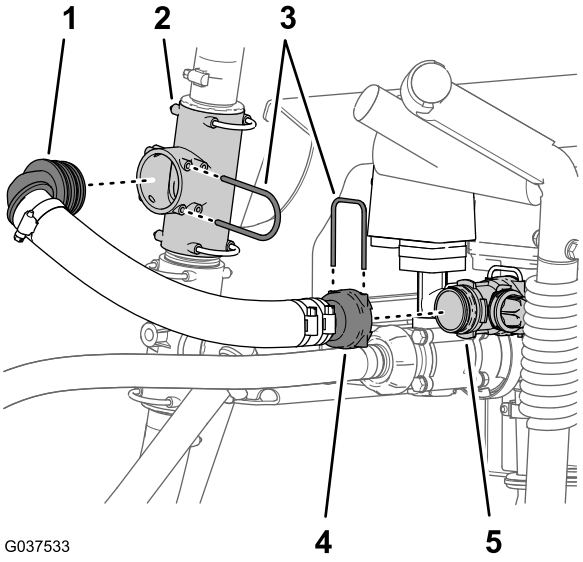

Figure 36

1. 90° barbed fitting (agitation Bypass Hose)
2. T-fitting (upper)
3. Retainers
4. Straight barbed fitting (agitation Bypass Hose)
5. Agitation bypass valve

2. Remove the retainer that secures the 90° barbed fitting for the agitation bypass hose to the upper T-fitting (Figure 36).
3. Remove the agitation bypass hose from the machine (Figure 36).
4. Fully loosen the fly nut for the sprayer supply hose from the threaded fitting of the master control valve (Figure 37).

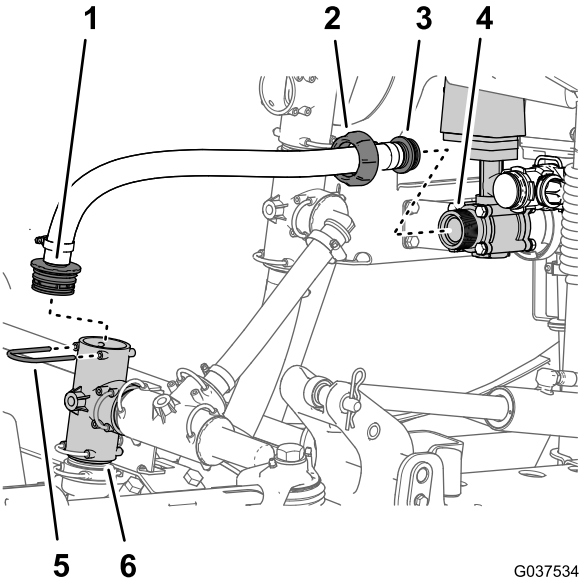

Figure 37

1. Straight barbed fitting (sprayer supply hose)
2. Fly nut (sprayer supply hose)
3. Straight barbed fitting—fly nut (agitation supply hose)
4. Threaded fitting (master control valve)
5. Retainer
6. T-fitting (sprayer pump)

5. Remove the retainer that secures the straight barbed fitting of the sprayer supply hose and the T-fitting at the sprayer pump (Figure 37).
6. Remove the sprayer supply hose from the machine (Figure 37).

Note: Retain the retainers that you removed in steps 1, 2, and 5 for installation Installing the Section Bypass Hose (page 28) and 11 Installing the Manifold Supply Hose (page 28). You no longer need the agitation bypass and sprayer supply hoses.

Removing the Flow Meter

Machines with the Optional Pro Control Kit

1. Remove the 2 flange clamps that secure the flow meter to the flanges of the agitation control valve and the left boom-segment valve (Figure 38).

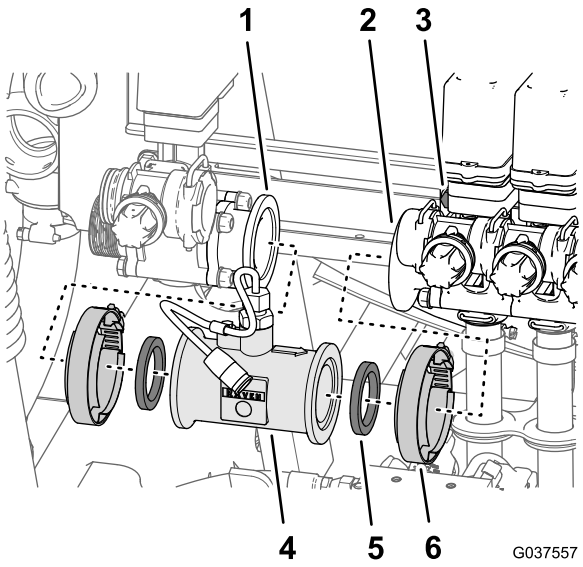

Figure 38

1. Flange (agitation control valve)
2. Flange (left-boom-section valve)
3. Bolt and nut (boom-section valve)
4. Flow meter
5. Gasket
6. Flange clamp

2. Remove the 2 gaskets and the flow meter from the machine (Figure 38).

   Note: If needed, loosen the 4 flange-head bolts and the 4 flange locknuts that secure the 3 boom-section valves to the valve support (Figure 38).

6

Disassembling the Supply Hose

Machines with the Optional Spray Gun Kit or Electric Hose-Reel Kit or Eductor Kit

No Parts Required

Removing the Spray Gun from the Supply Hose

Machines with the Spray Gun Kit

1. Remove the hose clamp that secures the supply hose to the hose barb of the spray gun (Figure 39).

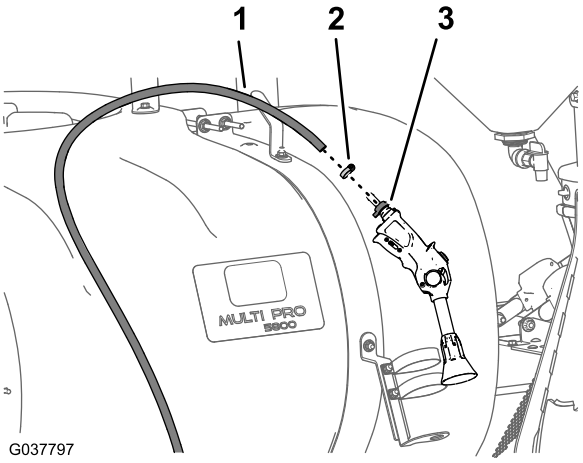

Figure 39

1. Supply hose
2. Hose clamp
3. Hose barb (spray gun)

2. Remove the hose from the hose barb (Figure 39).

   Note: Retain the 2 hose clamps and spray gun for installation in Installing the Supply Hose—Machines with the Optional Spray Gun Kit (page 41). You will remove the supply hose with the valve mount in Removing the Valve Support (page 20).

Removing the Supply Hose from the Hose Reel

Machines with the Electric Hose-Reel Kit

1. Remove the hose clamp that secures the supply hose to the straight-hose barb of the hose reel (Figure 40).

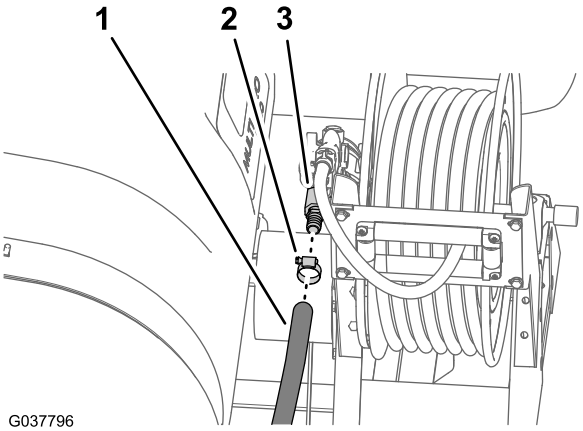

Figure 40

1. Supply hose
2. Hose clamp
3. Straight-hose barb

2. Remove the hose from the hose barb (Figure 40).

   Note: You will remove the supply hose with the valve mount in Removing the Valve Support (page 20).

Removing the Eductor Supply Hose from the Eductor

Machines with the Optional Eductor Kit

1. Remove the flange clamp that secures the straight barbed fitting of the eductor supply hose to the inlet flange of the eductor (Figure 41).

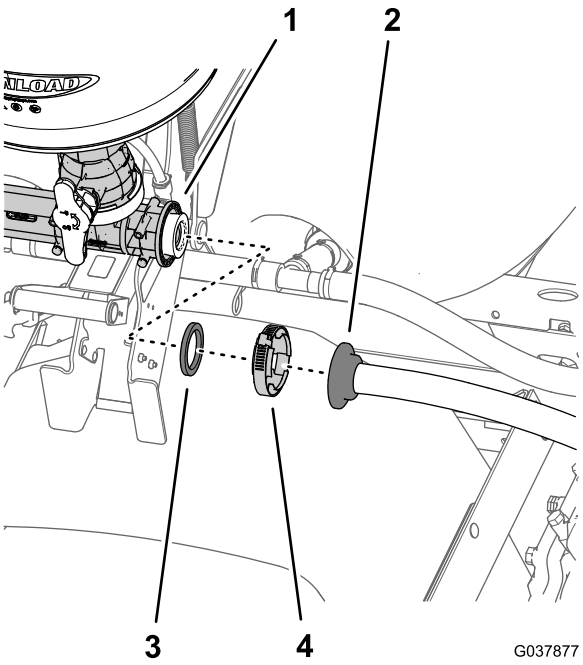

Figure 41

1. Flange (eductor inlet)
2. Straight barbed fitting
3. Gasket
4. Flange clamp

2. Separate the straight barbed fitting from the eductor and remove the gasket (Figure 41).

   Note: Retain the flange clamp and gasket for installation in Installing the Eductor Supply Hose (page 34). You will remove the supply hose with the valve mount in Removing the Valve Support (page 20).

7

Removing the Valve Support and Boom-Section Valves

No Parts Required

Removing the Boom-Section Hoses

1. At the outer-boom section, remove the hose clamp that secures the supply hose for the boom section to the barbed T-fitting (Figure 42).

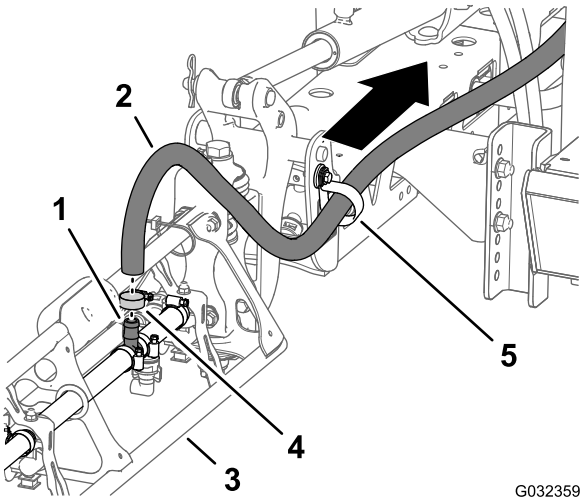

Figure 42

1. Barbed T-fitting
2. Supply hose (outer-boom section)
3. Outer-boom section
4. Hose clamp
5. R-clamp

2. Remove the hose from the T-fitting (Figure 42).
3. Remove the free end of the hose from the R-clamp (Figure 42).
4. Repeat steps 1 through 3 for the supply hose at the other outer-boom section.
5. Under the center-boom section, remove the hose clamp that secures the supply hose for the boom section to the barbed T-fitting (Figure 43).

   Note: Retain the hose clamps from the outer and center boom sections for installation in 14 Installing the Boom-Section Hoses (page 37); you no longer need the left, center, and right boom-section hoses.

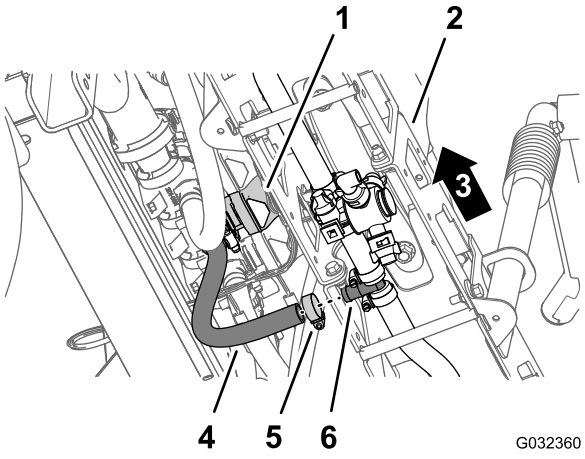

Figure 43

1. Center-boom-section valve
2. Center-boom section
3. Left side of the machine
4. Hose (center-boom section)
5. Hose clamp
6. Barbed T-fitting

Removing the Valve Support

Valve support, valves, and boom-section hoses weight: approximately 20.4 kg (45 lb).

Have another person help you remove the valve support.

1. Remove the 2 Phillips-head screws (#10 x 5/8 inch) and 2 washers (#10) that secure the lower T-fitting to the valve support (Figure 44).

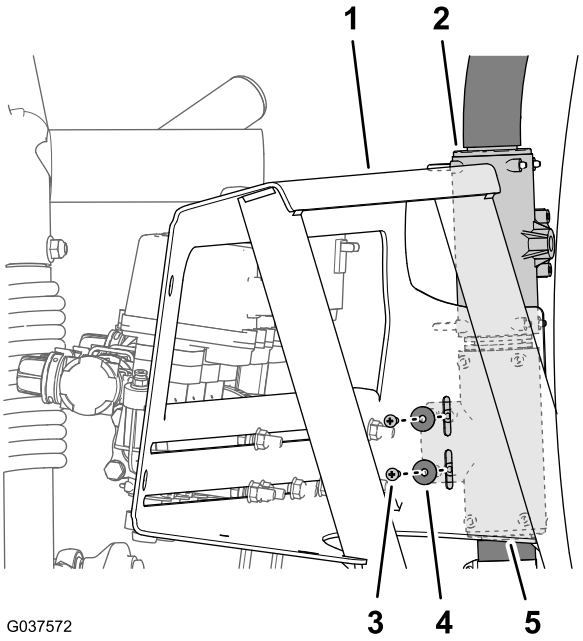

Figure 44

1. Valve support
2. T-fitting (upper)
3. Washer (#10)
4. Phillips-head screw (#10 x 5/8 inch)
5. T-fitting (lower)

2. While supporting the valve mount, remove the 4 flange-head bolts (3/8 x 1 inch) and 4 flange locknuts (3/8 inch) that secure the valve mount to the frame of the machine (Figure 45).

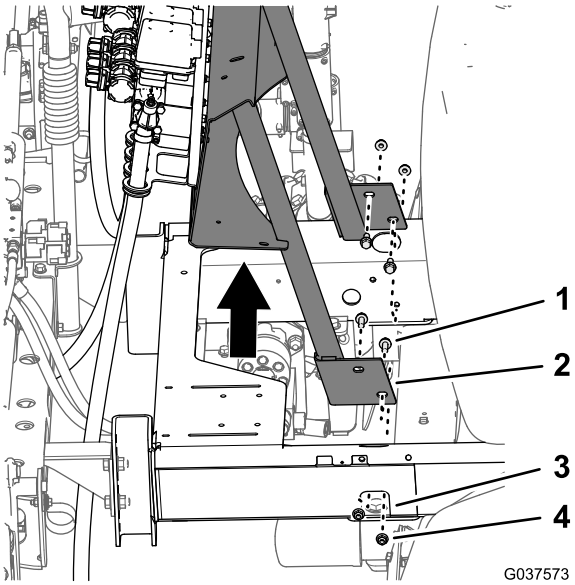

Figure 45

1. Flange-head bolt (3/8 x 1 inch)
2. Valve mount
3. Frame (machine)
4. Flange locknut (3/8 inch)

3. Remove the valve support, valves, and boom section hoses from the machine (Figure 45).

Note: Retain the 4 flange-head bolts, 4 flange nuts, 2 Phillips-head screws and 2 washers for installation 9 Installing the Valve Mount to the Machine (page 23).You no longer need the agitation valve, boom-section valves, and hoses for the left, center, and right boom sections.

8

Assembling the Sprayer-Valve Assembly to the Valve Mount

Parts needed for this procedure:

1	Sprayer-valve assembly
1	Cover—52 mm (2-1/16 inches)
1	Gasket—25 x 35 mm (1 x 1-3/8 inches)
1	Flange clamp—40 to 64 mm (1-9/16 to 2-1/2 inches)
1	Valve mount
5	Flange-head bolts (5/16 x 1 inch)
5	Flange locknuts (5/16 inch)

Assembling the Cover to the 90° Elbow

1. Align the gasket—25 x 35 mm (1 x 1-3/8 inches) and cover—52 mm (2-1/16 inches) to the flange of the 90° elbow (Figure 46).

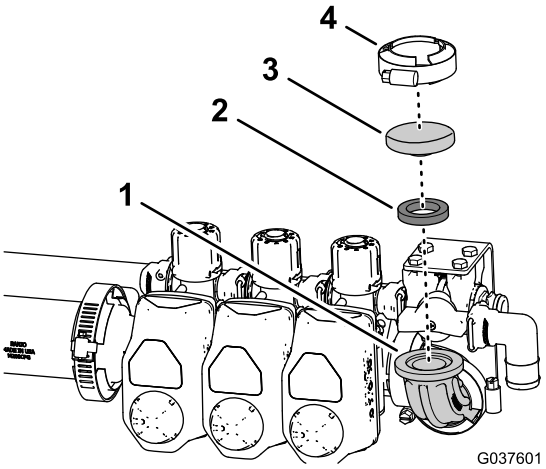

Figure 46

1. 90° elbow
2. Gasket—25 x 35 mm (1 x 1-3/8 inches)
3. Cover—52 mm (2-1/16 inches)
4. Flange clamp—40 to 64 mm (1-9/16 to 2-1/2 inches)

2. Secure the gasket and cover to the elbow with the flange clamp—40 to 64 mm (1-9/16 to 2-1/2 inches) as shown in Figure 46.

Assembling the Flow Meter

Machines with the Optional Pro-Control Kit

1. Remove the 2 flange clamps that secure the 2 gaskets and straight coupling to the adapter couplings at the agitation valve and the left-boom-section valve (Figure 47).

   Note: If needed, loosen the 4 flange-head bolts (1/4 x 3/4 inch) and the flange locknuts (1/4 inch) that secure the 3 boom-section valves to the valve bracket. You no longer need the adapter coupling.

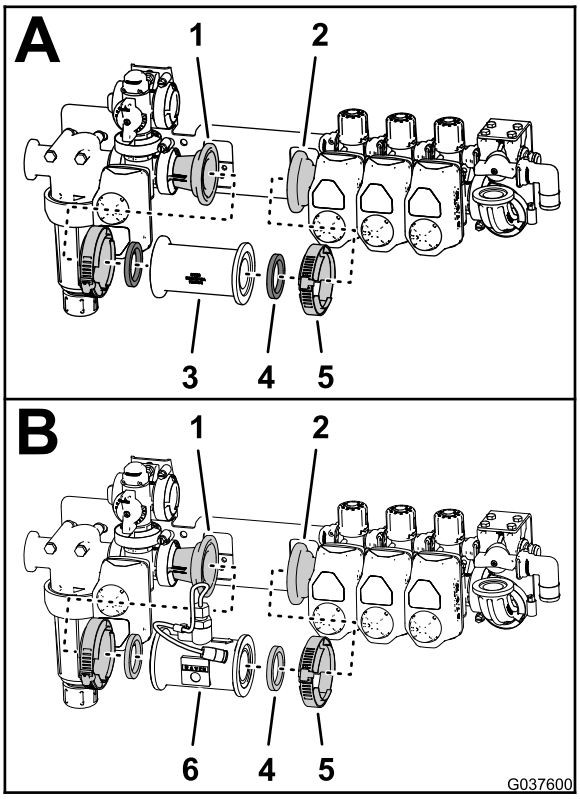

Figure 47

1. Adapter coupling (at the agitation valve)
2. Adapter coupling (at the left-boom-section valve)
3. Straight coupling
4. Gasket
5. Flange clamp
6. Flow meter

2. Align the gaskets that you removed in step 1 with the flow meter that you removed in Removing the Flow Meter (page 18).
3. Align the gaskets and flow meter with the flanges of the adapter couplings at the agitation valve and the left-boom-section valve (Figure 47).
4. Secure the flow meter to the adapter couplings with the 2 flange clamps that you removed in step 1 (Figure 47).
5. If you loosened the 4 flange-head bolts (1/4 x 3/4 inch) and the flange locknuts (1/4 inch) that secure the 3 boom-section valves to the valve bracket, torque the nuts and bolts to 102 to 124 N·m (90 to 110 in-lb).

Assembling the Valve Assembly to the Valve Mount

1. Align the holes in the valve bracket with the sprayer-valve assembly to the holes in the valve mount (Figure 48 and Figure 49).

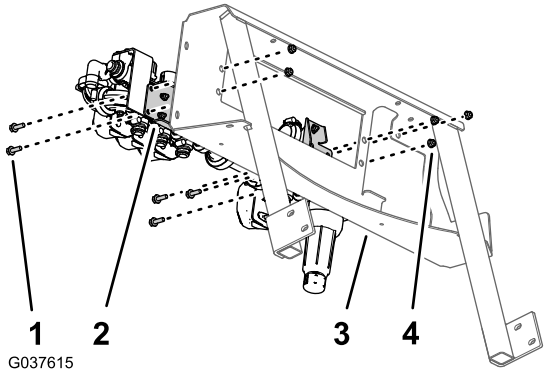

Figure 48

1. Flange-head bolts (5/16 x 1 inch)
2. Valve bracket (sprayer-valve assembly)
3. Valve mount
4. Flange locknuts (5/16 inch)

2. Assemble the valve bracket to the valve mount (Figure 48 and Figure 49) with the 5 flange-head bolts (5/16 x 1 inch) and 5 flange locknuts (5/16 inch).

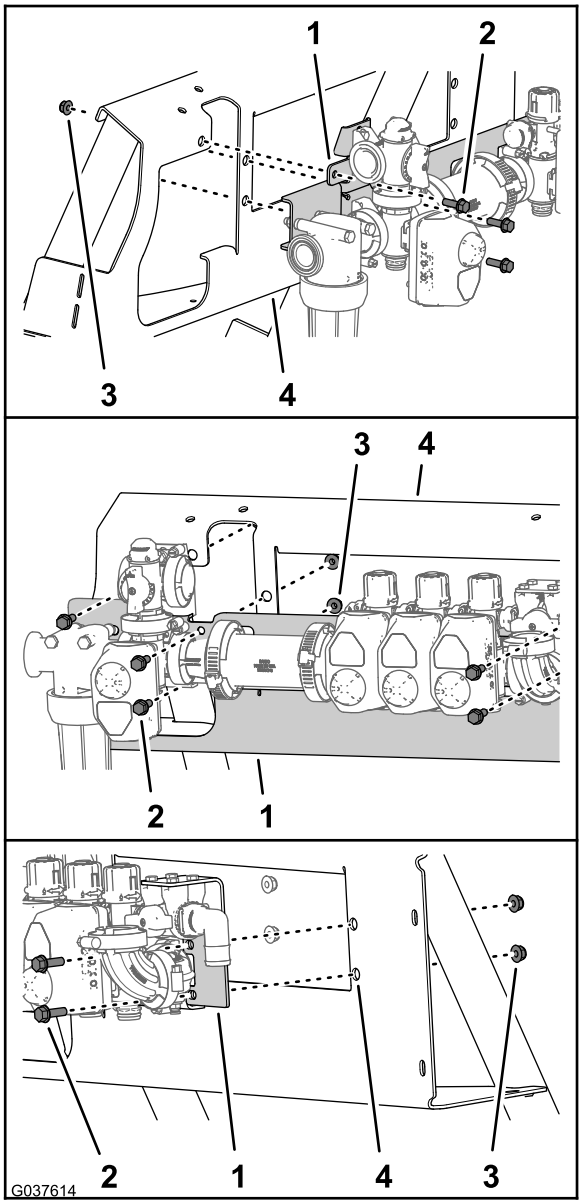

Figure 49

1. Valve bracket (sprayer-valve assembly)
2. Flange-head bolts (5/16 x 1 inch)
3. Flange locknuts (5/16 inch)
4. Valve mount

3. Torque the flange head bolts and flange locknuts to 199 to 254 N·m (175 to 225 in-lb).

9

Installing the Valve Mount to the Machine

No Parts Required

Procedure

Valve support, valves, and boom-section hoses weight: approximately 30 kg (65 lb).

Have another person help you install the valve mount.

1. Align the holes in the valve mount with the holes in the frame of the machine (Figure 50).

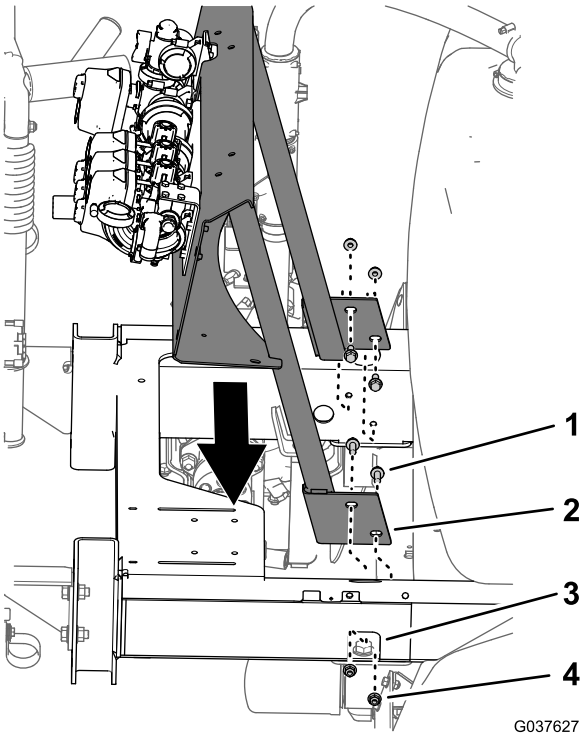

Figure 50

1. Flange-head bolt (3/8 x 1 inch)
2. Valve mount
3. Frame of the machine
4. Flange locknut (3/8 inch)

2. Assemble the valve mount to the frame (Figure 50) with the 4 flange-head bolts (3/8 x 1 inch) and 4 flange locknuts (3/8 inch) that you removed in Removing the Valve Support (page 20).
3. Torque the flange head bolts and flange locknuts to 37 to 45 N·m (27 to 33 ft-lb).
4. Align the holes in the lower T-fitting with the slots in the valve mount (Figure 51).

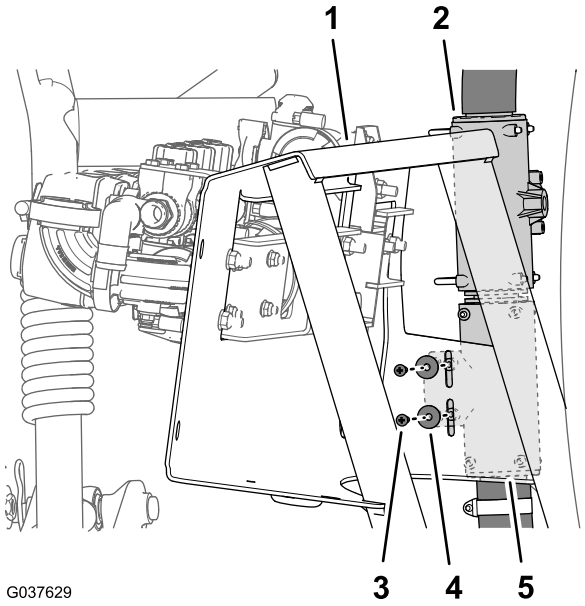

Figure 51

1. Valve support
2. T-fitting (upper)
3. Washer (#10)
4. Phillips-head screw (#10 x 5/8 inch)
5. T-fitting (lower)

5. Secure the T-fitting to the valve mount with the 2 Phillips-head screws (#10 x 5/8 inch) and 2 washers (#10) that you removed in Removing the Valve Support (page 20).

10

Installing the Agitation Shutoff Valve, Nozzles, and Hoses

Parts needed for this procedure:

1	Screw (6-32 x 5/8 inch)
1	Handle
1	Agitation throttle valve
1	Bracket (nylon)
1	Agitation-valve bracket
1	Bolt (6 x 12 mm)
1	Agitation supply hose
1	Agitation-nozzle assembly
1	Agitation bypass hose—25 x 254 mm (1 x 10 inches)
1	Gasket—25 x 35 mm (1 x 1-3/8 inches)
1	Flange clamp—40 to 64 mm (1-9/16 to 2-1/2 inches)

Assembling the Agitation Throttle Valve

1. Assemble the handle to the agitation throttle valve (Figure 52) with the screw (6-32 x 5/8 inch).

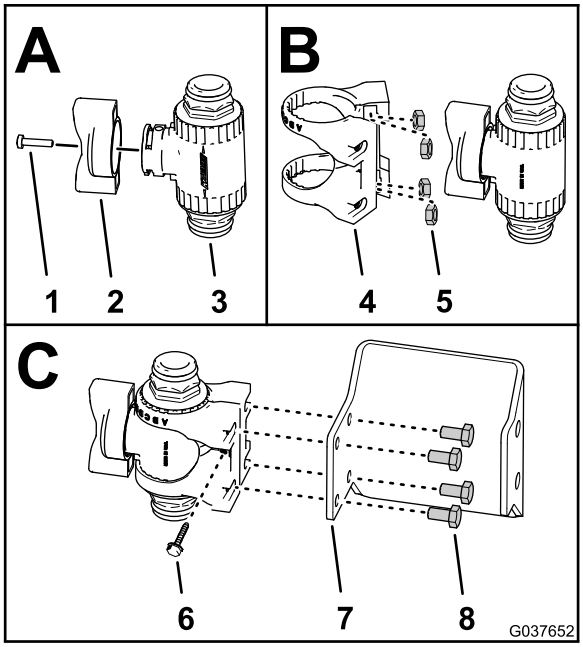

Figure 52

1. Screw (6-32 x 5/8 inch)
2. Handle
3. Agitation throttle valve
4. Throttle valve mount (nylon)
5. Nut-stainless steel (6 mm—throttle valve mount)
6. Washer-head screw (#6—throttle valve mount)
7. Agitation-valve bracket
8. Bolt (6 x 12 mm)

2. If not assembled, insert the 4 stainless steel nuts into the slots in the nylon throttle valve mount for the agitation throttle valve (Figure 52).
3. Assemble the agitation throttle valve into the throttle valve mount as shown in (Figure 52)
4. Secure the throttle valve mount to the agitation throttle valve with the screw (6-32 x 5/8 inch) as shown in (Figure 52).
5. Assemble the throttle valve and mount to the agitation-valve bracket (Figure 52) with the 4 bolt (6 x 12 mm).
6. Align the holes in the agitation-valve bracket with the holes in the sprayer-pump bracket (Figure 53).

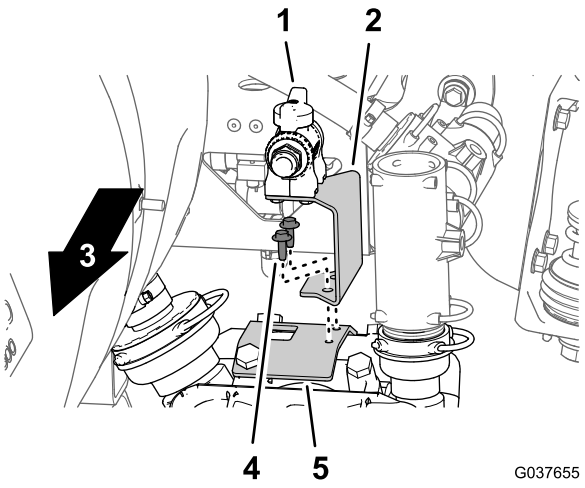

Figure 53

1. Agitation throttle valve
2. Agitation-valve bracket
3. Front of the machine
4. Flange-head bolt—thread forming (1/4 x 3/4 inch)
5. Sprayer-pump bracket

7. Secure the agitation-valve bracket to the sprayer-pump bracket (Figure 53) with 2 flange-head bolts (1/4 x 3/4 inch).

Installing the Agitation-Nozzle Assemble and Hoses

1. Assemble the straight barbed fitting of the agitation supply hose (1 x 33-1/2 inches) onto the quick coupling of the agitation throttle valve with the retainer that is supplied with the hose (Figure 54).

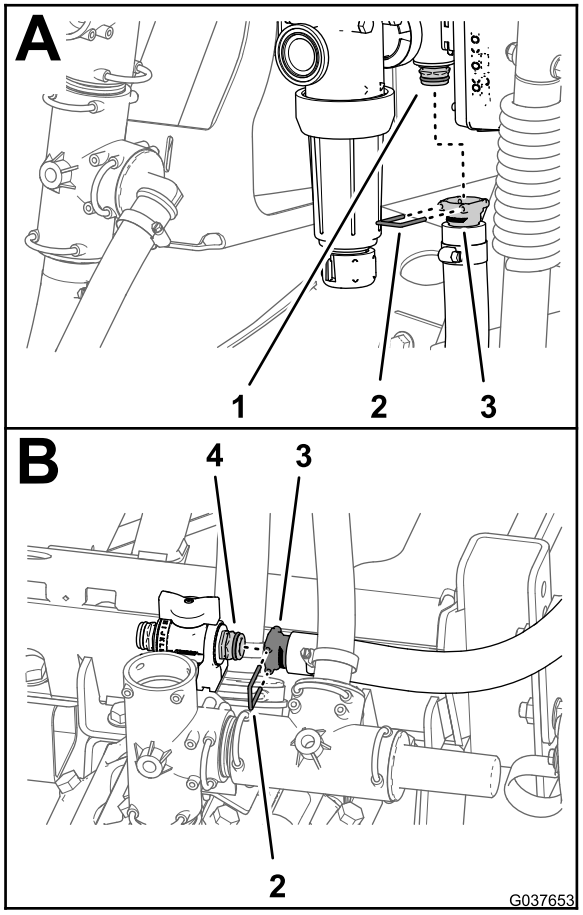

Figure 54

1. Quick-connect fitting (agitation control valve)
2. Retainer
3. Straight barbed fitting (agitation supply hose)
4. Quick-connect fitting (agitation throttle valve)

2. Route the hose to the agitation throttle valve (Figure 55).

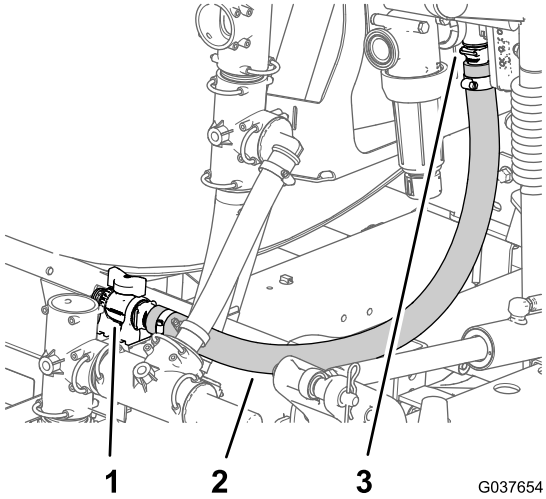

Figure 55

1. Agitation throttle valve
2. Agitation supply hose (1 x 33-1/2 inches)
3. Agitation control valve

3. Assemble the straight barbed fitting of the agitation supply hose onto the quick coupling of the agitation throttle valve with the retainer that is supplied with the hose (Figure 54).
4. Insert the 4 agitation nozzles of the agitation-nozzle assembly into the bulkhead fittings of the sprayer tank (Figure 56).

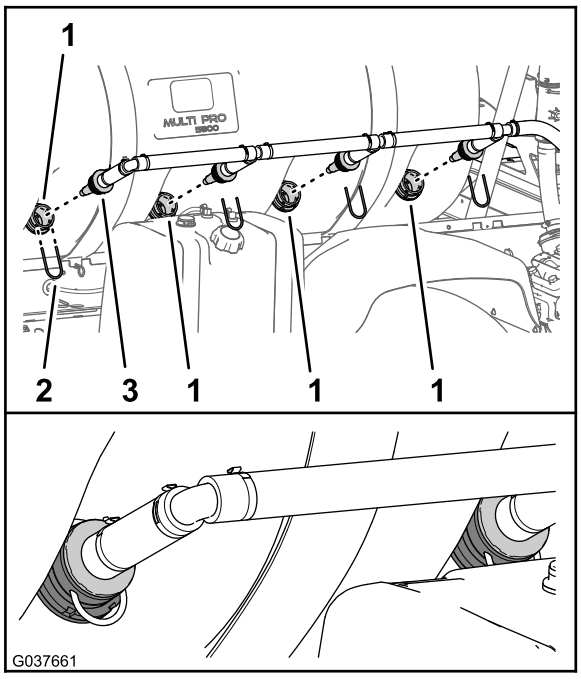

Figure 56

1. Bulkhead fitting
2. Retainer
3. Agitation nozzle (agitation-nozzle assembly)

5. Secure the agitation nozzles with the 4 retainers that you removed in step 3 of Removing the Agitation Nozzles and Hoses (page 15).
6. Assemble the straight barbed fitting of the agitation-nozzle assembly onto the quick coupling of the agitation throttle valve with the retainer that is supplied with the agitation-hose assembly (Figure 57).

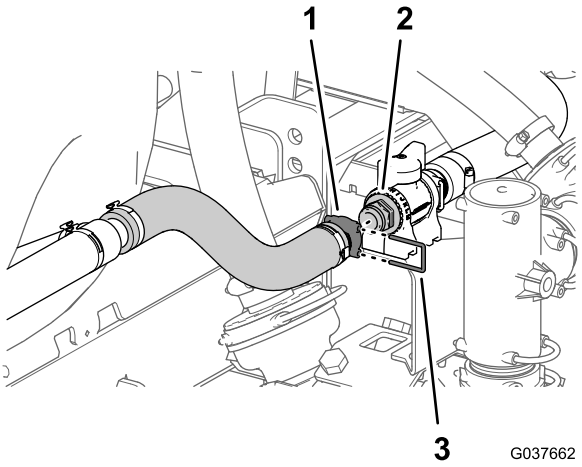

Figure 57

1. Straight barbed fitting (agitation-nozzle assembly)
2. Quick-connect fitting (agitation throttle valve)
3. Retainer

Installing the Section Bypass Hose

Machines without the Optional Eductor Kit

Important: **If you are installing the conversion valve kit on a machine with an optional eductor kit, skip this procedure and complete 12 Installing the Shutoff Valve and Hoses for the Optional Eductor Kit (page 29).**

1. Rotate the upper T-fitting approximately 80° counterclockwise (Figure 58).

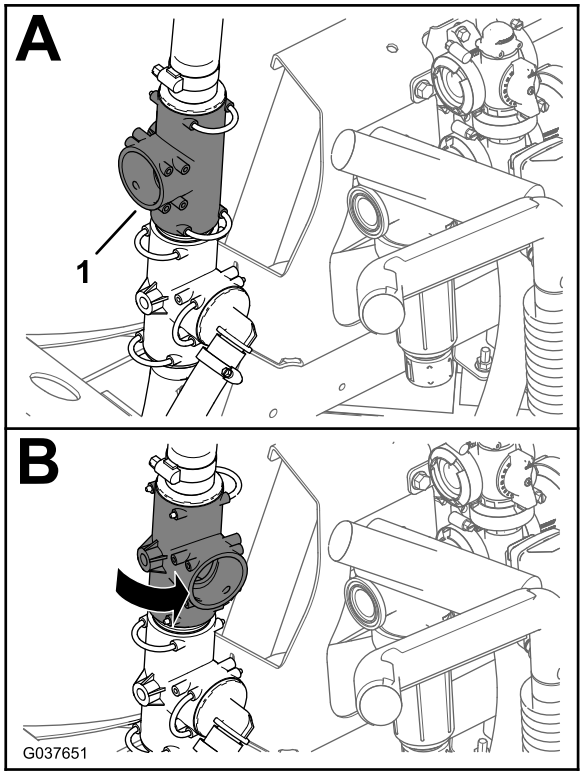

Figure 58

1. Upper T-fitting

2. Assemble the 90° barbed fitting of the agitation bypass hose—25 x 254 mm (1 x 10 inches) to the upper T-fitting (Figure 59) with the retainer that you removed in step 2 of Removing the Agitation Bypass and Sprayer Supply Hoses (page 17).

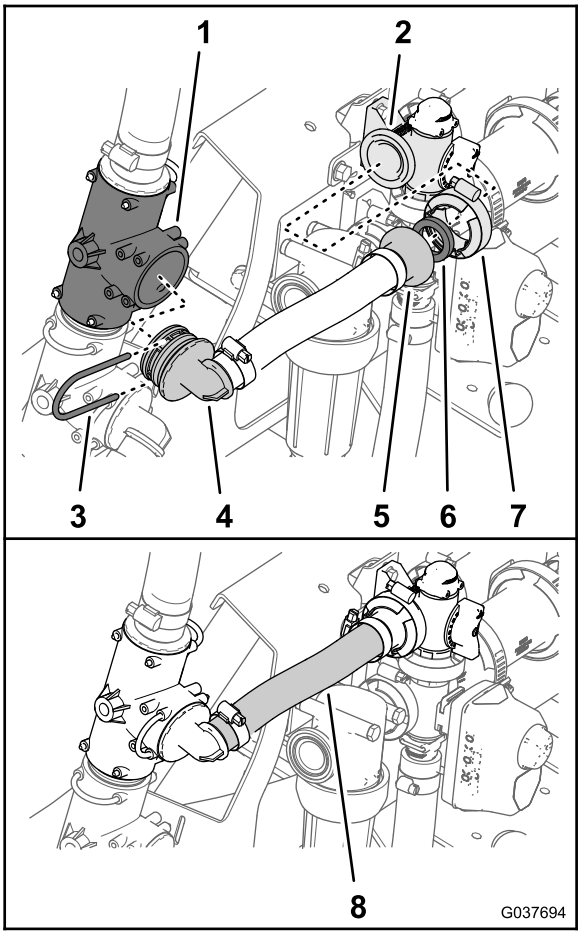

Figure 59

1. Upper T-fitting
2. Flange (agitation bypass valve)
3. Retainer
4. 90° barbed fitting
5. Barbed flange fitting
6. Gasket—25 x 35 mm (1 x 1-3/8 inches)
7. Flange clamp—40 to 64 mm (1-9/16 to 2-1/2 inches)
8. Agitation bypass hose—25 x 254 mm (1 x 10 inches)

3. Secure the barbed flange fitting of the agitation bypass hose and the gasket—25 x 35 mm (1 x 1-3/8 inches) to the flange of the agitation bypass valve (Figure 59) with a flange clamp—40 to 64 mm (1-9/16 to 2-1/2 inches).

11

Installing the Manifold Supply Hose

Parts needed for this procedure:

1	Manifold supply hose (1 x 25 inches)
1	Gasket—25 x 35 mm (1 x 1-3/8 inches)
1	Flange clamp—40 to 64 mm (1-9/16 to 2-1/2 inches)

Procedure

Important: If you are installing the conversion valve kit on a machine with an optional eductor kit, skip this procedure and complete 12 Installing the Shutoff Valve and Hoses for the Optional Eductor Kit (page 29).

1. Assemble the straight barbed fitting of the manifold supply hose to the T-fitting of the sprayer pump (Figure 60) with the retainer that you removed in step 5 of Removing the Agitation Bypass and Sprayer Supply Hoses (page 17).

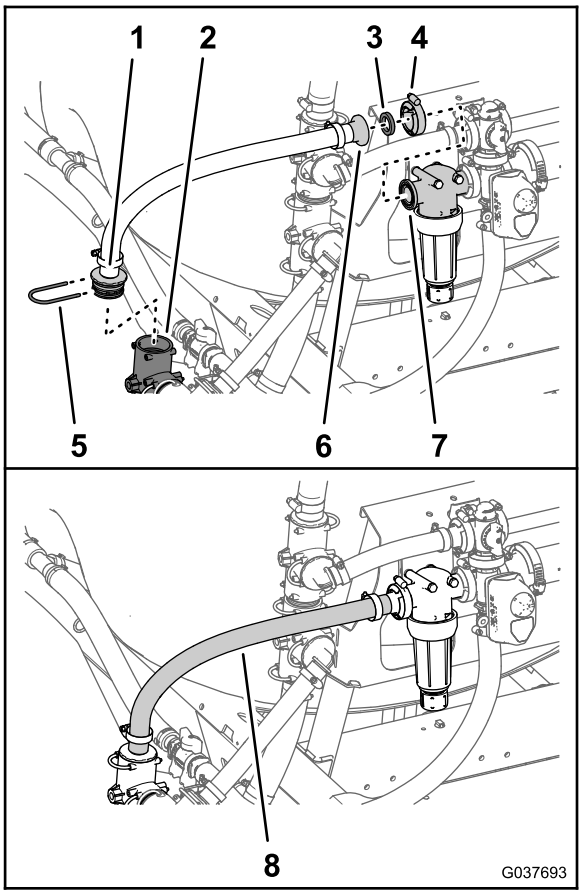

Figure 60

1. Straight barbed fitting
2. T-fitting (sprayer pump)
3. Gasket—25 x 35 mm (1 x 1-3/8 inches)
4. Flange clamp—40 to 64 mm (1-9/16 to 2-1/2 inches)
5. Retainer
6. Flange (filter head)
7. Barbed flange fitting
8. Manifold supply hose (1 x 25 inches)

2. Secure the barbed flange fitting of the manifold supply hose and the gasket—25 x 35 mm (1 x 1-3/8 inches) to the flange of the filter head (Figure 60) with a flange clamp—40 to 64 mm (1-9/16 to 2-1/2 inches).

12

Installing the Shutoff Valve and Hoses for the Optional Eductor Kit

Parts needed for this procedure:

1	Eductor shutoff valve
1	Shutoff-valve bracket
1	Flange locknuts (1/4 inch)
1	Gasket—25 x 35 mm (1 x 1-3/8 inches)
1	Flange clamp—40 to 64 mm (1-9/16 to 2-1/2 inches)
1	Agitation bypass hose—25 x 337 mm (1 x 13-1/4 inches)
1	Gasket—25 x 35 mm (1 x 1-3/8 inches)
1	Flange clamp—40 to 64 mm (1-9/16 to 2-1/2 inches)
1	Pressure-relief hose—2.5 x 29.8 cm (1 x 11-3/4 inches)
1	Sprayer supply hose—2.5 x 48.6 cm (1 x 19-1/8 inches)
1	Eductor supply hose—2.5 x 156.5 cm (1 x 61-5/8 inches)

Installing the Agitation Shutoff Valve

1. Align the studs of the eductor shutoff valve with the holes in the shutoff-valve bracket (Figure 61).

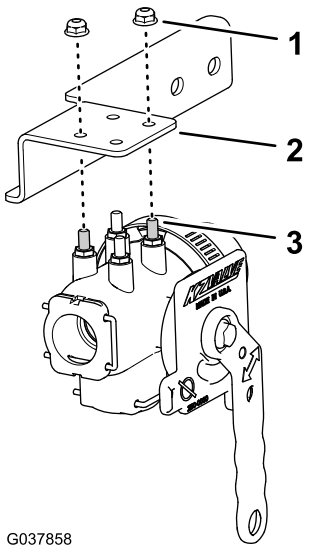

Figure 61

1. Flange locknuts (1/4 inch)
2. Shutoff-valve bracket
3. Stud (eductor shutoff valve)

2. Assemble the valve to the bracket (Figure 61) with the 2 flange locknuts (1/4 inch) and torque the locknuts to 52 to 67 N·m (46 to 60 in-lb).
3. At the front, left side of the valve mount, remove the 2 flange locknuts (5/16 inch) that secure the pressure filter to the manifold bracket (Figure 62).

   Note: Do not remove the 2 bolts (5/16 x 3-3/4 inches) that secure the pressure filter,

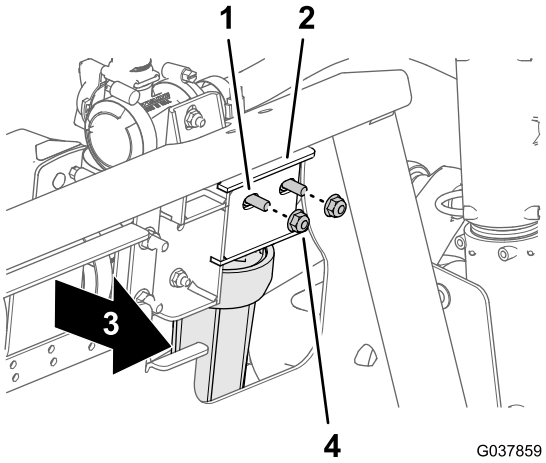

Figure 62

1. Bolt (5/16 x 3-3/4 inches)
2. Manifold bracket
3. Front of the machine
4. Flange locknuts (5/16 inch)

4. Align the flange of the eductor shutoff valve and gasket—25 x 35 mm (1 x 1-3/8 inches) to the flange of the filter head (Figure 63).

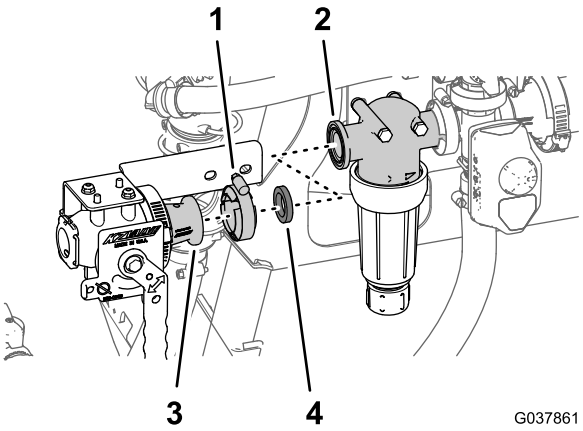

Figure 63

1. Flange clamp—40 to 64 mm (1-9/16 to 2-1/2 inches)
2. Flange (filter head)
3. Flange (eductor shutoff valve)
4. Gasket—25 x 35 mm (1 x 1-3/8 inches)

5. At the front side of the manifold bracket, align the holes in the shutoff-valve bracket (Figure 64) with the 2 bolts (5/16 x 3-3/4 inches).

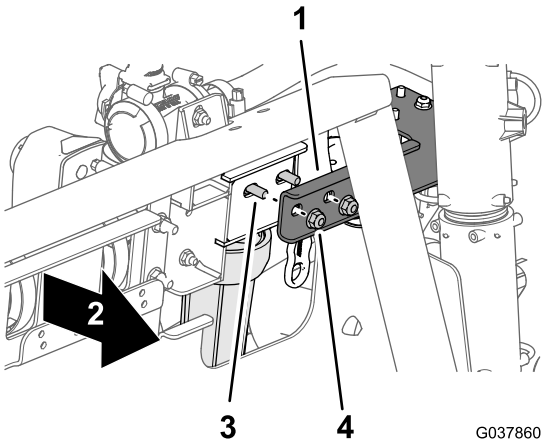

Figure 64

1. Shutoff-valve bracket
2. Front of the machine
3. Bolt (5/16 x 3-3/4 inches)
4. Flange locknuts (5/16 inch)

6. Assemble the eductor shutoff valve to the filter head (Figure 63) with a flange clamp—40 to 64 mm (1-9/16 to 2-1/2 inches).
7. Assemble the shutoff-valve bracket to the manifold bracket (Figure 64) with the 2 flange locknuts that you removed in step 3, and torque the nuts to 1978 to 2542 N·m (175 to 225 in-lb).

Moving the Pressure-Relief Valve

1. Remove the retainer that secures the pressure-relief hose to the T-fitting at the pressure-relief valve (Figure 65).

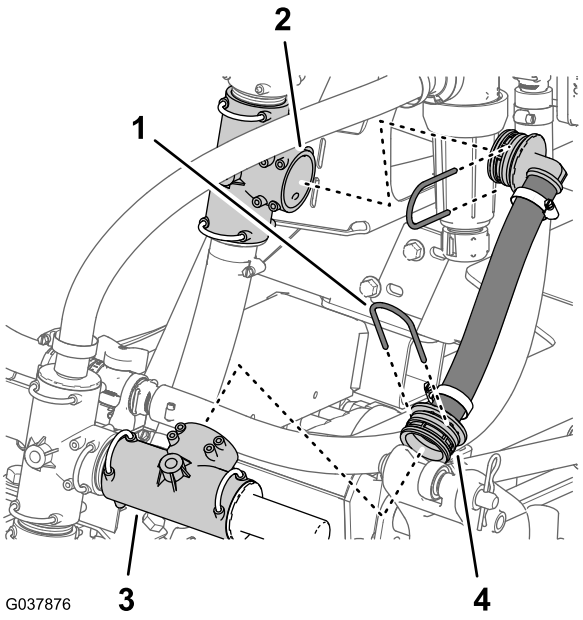

Figure 65

1. Retainer
2. Lower T-fitting
3. T-fitting (pressure-relief valve)
4. Pressure-relief hose

2. Remove the retainer that secures the pressure-relief hose to the lower T-fitting, and remove the pressure-relief hose from the machine (Figure 65).

   Note: Retain the 2 retainers for installation in Installing the Pressure Relief Hose (page 33); you no longer need the pressure-relief hose.
3. Remove the retainer that secures the T-fitting with the pressure-relief valve to the T-fitting in the top of the sprayer pump (Figure 66).

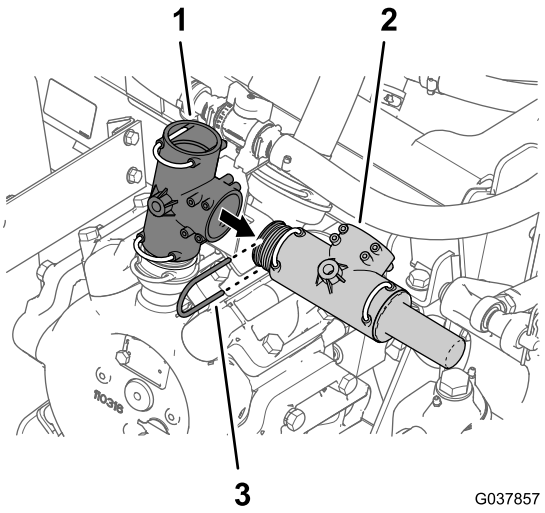

Figure 66

1. T-fitting (sprayer pump)
2. T-fitting (pressure-relief valve)
3. Retainer

4. Remove the T-fitting with the pressure-relief valve from the T-fitting in the top of the sprayer pump (Figure 66).

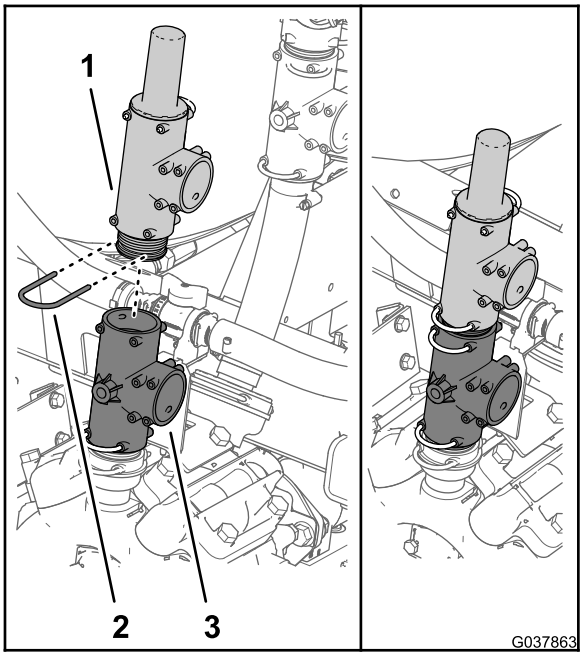

Figure 67

1. T-fitting (pressure-relief valve)
2. Retainer
3. T-fitting (sprayer pump)

5. Assemble the T-fitting with the pressure-relief valve to the T-fitting in the top of the sprayer pump with the retainer that you removed in step 3 as shown in Figure 67.

Installing the Section Bypass Hose

Machines with the Optional Eductor Kit

1. Rotate the upper T-fitting approximately 35° counterclockwise (Figure 68).

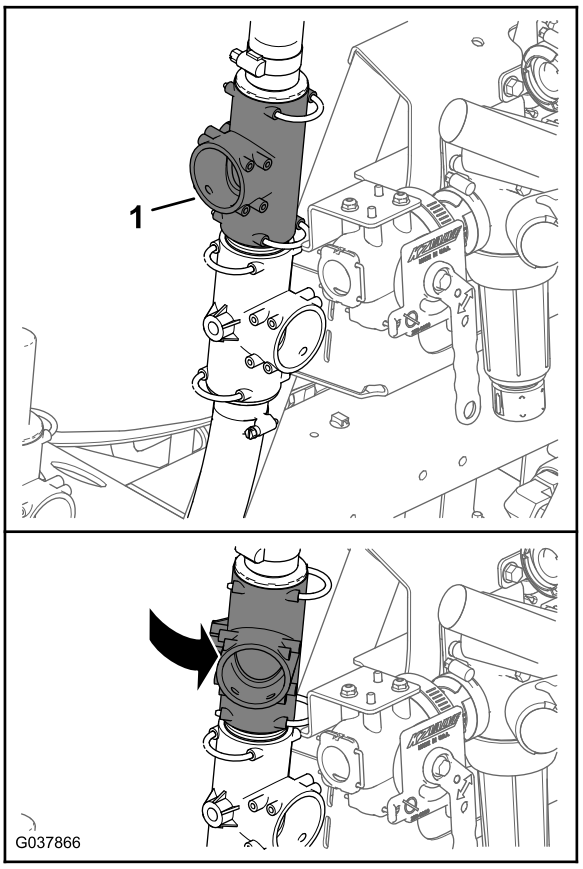

Figure 68

1. Upper T-fitting

2. Assemble the 90° barbed fitting of the agitation bypass hose to the upper T-fitting (Figure 69) with the retainer that you removed in step 2 of Removing the Agitation Bypass and Sprayer Supply Hoses (page 17).

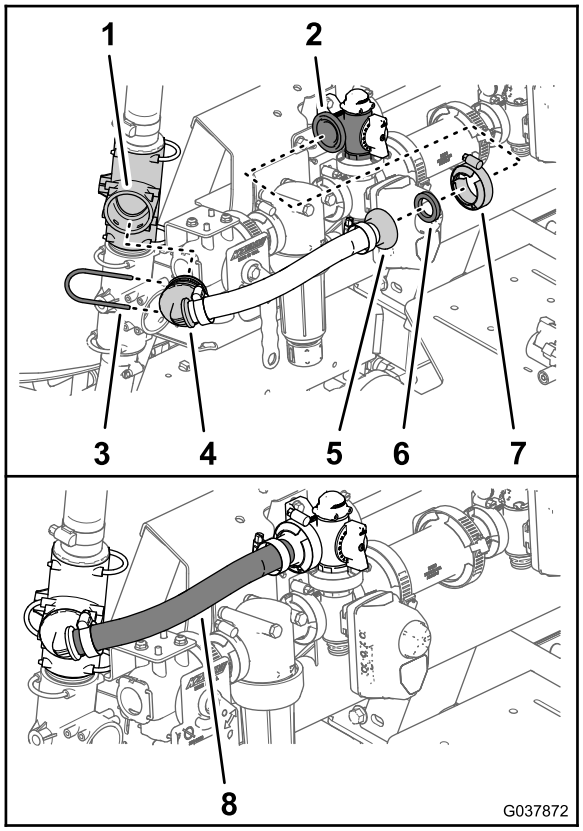

Figure 69

1. Upper T-fitting
2. Flange (agitation bypass valve)
3. Retainer
4. 90° barbed fitting
5. Barbed flange fitting
6. Gasket—25 x 35 mm (1 x 1-3/8 inches)
7. Flange clamp—40 to 64 mm (1-9/16 to 2-1/2 inches)
8. Agitation bypass hose—25 x 337 mm (1 x 13-1/4 inches)

3. Secure the barbed flange fitting of the agitation bypass hose and the gasket—25 x 35 mm (1 x 1-3/8 inches) to the flange of the agitation bypass valve (Figure 69) with flange clamp—40 to 64 mm (1-9/16 to 2-1/2 inches).

Installing the Pressure Relief Hose

1. Assemble the 90° fitting of the pressure-relief hose—25 x 298 mm (1 x 11-3/4 inches) into the open port of the T-fitting at the pressure-relief valve (Figure 70).

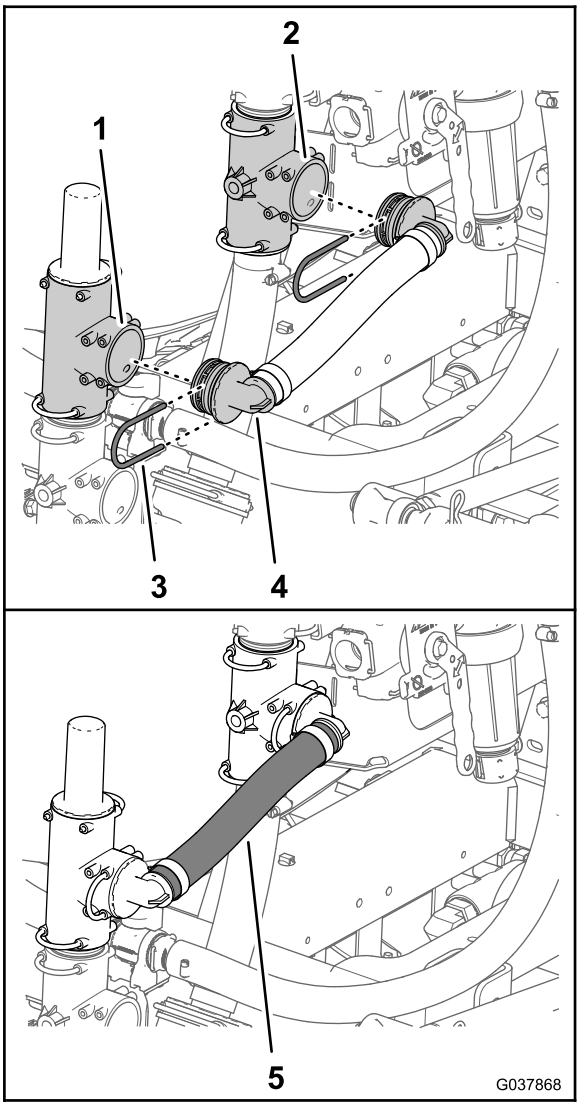

Figure 70

1. T-fitting (pressure-relief valve)
2. Lower T-fitting
3. Retainer
4. 90° fitting
5. Pressure-relief hose—25 x 298 mm (1 x 11-3/4 inches)

2. Assemble the 90° fitting of the pressure-relief hose into the open port of the lower T-fitting (Figure 70).
3. Secure the 90° fittings to the T-fitting (Figure 70) with the 2 retainers that you removed in step 1 and 2 of Moving the Pressure-Relief Valve (page 31).

Installing the Sprayer Supply Hose

1. Assemble the straight barbed fitting of the sprayer supply hose—25 x 486 mm (1 x 19-1/8 inches) into the inlet port of the eductor shutoff valve (Figure 71).

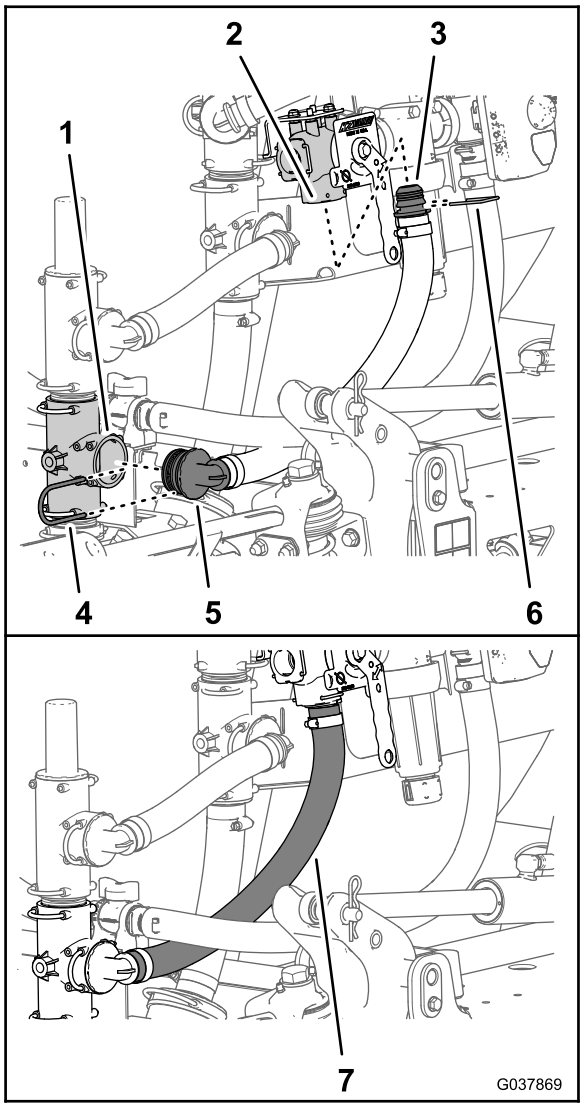

Figure 71

1. T-fitting (sprayer pump)
2. Inlet port (eductor shutoff valve)
3. Straight barbed fitting
4. Retainer
5. 90° fitting
6. Retainer (eductor shutoff valve)
7. Sprayer supply hose—25 x 486 mm (1 x 19-1/8 inches)

2. Secure the straight barbed fitting to the eductor shutoff valve with the retainer that is supplied with the shutoff valve (Figure 71).
3. Assemble the 90° fitting of the sprayer supply hose into the open port of the T-fitting of the sprayer pump (Figure 71).
4. Secure the 90° fitting to the T-fitting with the retainer (Figure 71) that you removed in step 5 of Removing the Agitation Bypass and Sprayer Supply Hoses (page 17).

Installing the Eductor Supply Hose

1. Assemble the 90° fitting of the eductor supply hose—2.5 x 156.5 cm (1 x 61-5/8 inches) to the left port of the eductor shutoff valve (Figure 72).

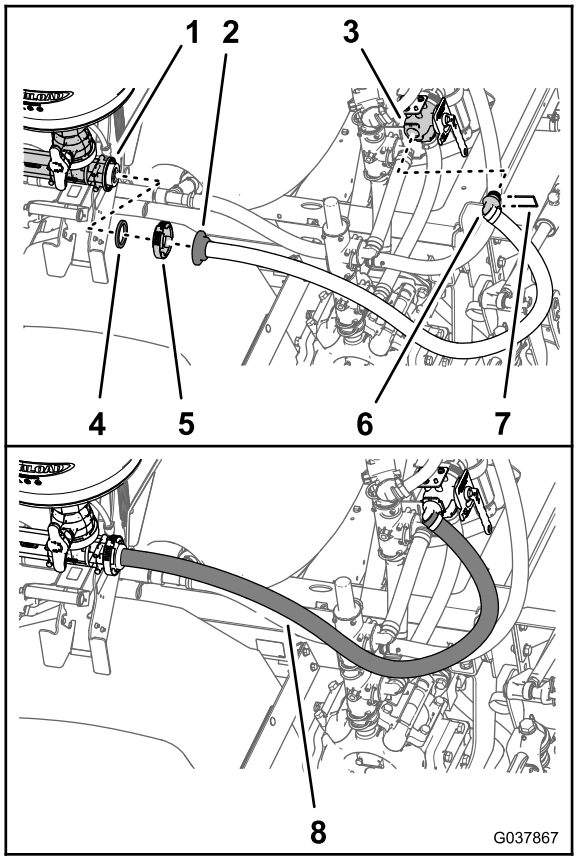

Figure 72

1. Flange (eductor inlet)
2. Straight barbed fitting
3. Eductor shutoff valve
4. Gasket
5. Flange clamp
6. 90° fitting
7. Retainer (eductor shutoff valve)
8. Eductor supply hose—2.5 x 156.5 cm (1 x 61-5/8 inches)

2. Secure the 90° fitting to the eductor supply hose with the retainer that is supplied with the shutoff valve (Figure 72).
3. Align the flange of the straight barbed fitting for the eductor supply hose and the gasket that you removed in Removing the Eductor Supply Hose from the Eductor (page 19) with the flange of the eductor inlet (Figure 72).
4. Secure the straight barbed fitting and gasket to the eductor (Figure 72) with the flange clamp that you retained in Removing the Eductor Supply Hose from the Eductor (page 19).

13

Installing the Section Bypass and Drain-Hose Assembly

Parts needed for this procedure:

1	Bypass and drain-hose assembly
1	Support clamp
1	Flange-head bolt (5/16 x 3/4 inch)
1	Washer (5/16 inch)

Installing the Tank Drain Hose

1. Assemble the barbed fitting of the drain valve that you removed in step 6 of 5 Removing the Bypass, Drain, and Agitation Components (page 13) to the drain hose—104 cm (41 inches) of the bypass and drain-hose assembly (Figure 73).

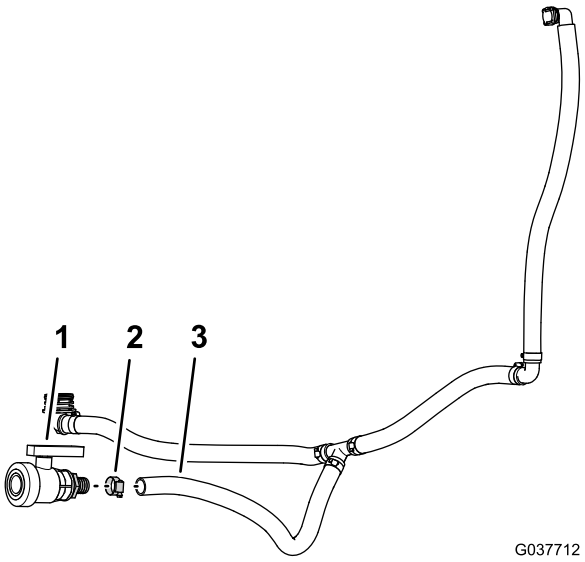

Figure 73

1. Drain valve
2. Hose clamp
3. Drain hose—2.5 x 104 cm (1 x 41 inches)—bypass and drain-hose assembly

2. Secure the drain valve to the hose with the hose clamp (Figure 73) that you removed in step 6 of 5 Removing the Bypass, Drain, and Agitation Components (page 13).
3. Align the bypass and drain-hose assembly to the back of the machine (Figure 74).

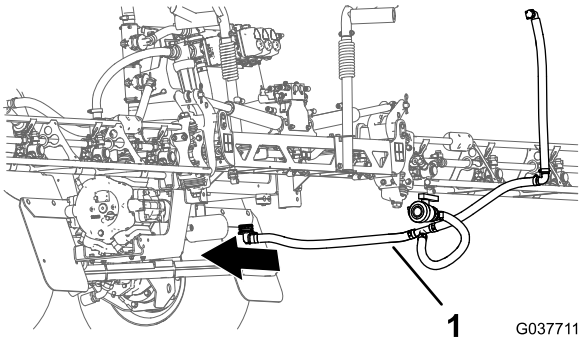

Figure 74

1. Drain-Hose Assembly

4. Assemble the 90° hose fitting of the drain hose—2.5 x 67 cm (1 x 26-1/2 inches) with adapter fitting at the bottom of the sprayer tank (Figure 75 and Figure 76).

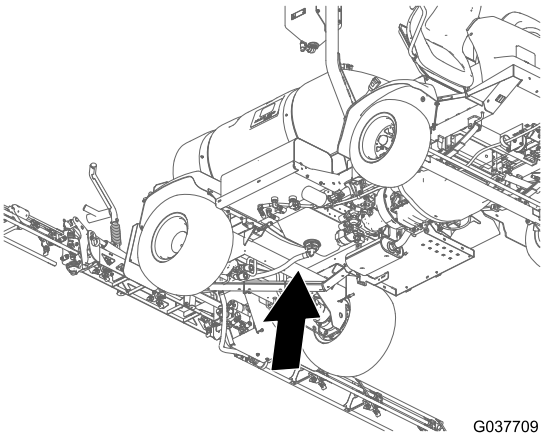

Figure 75

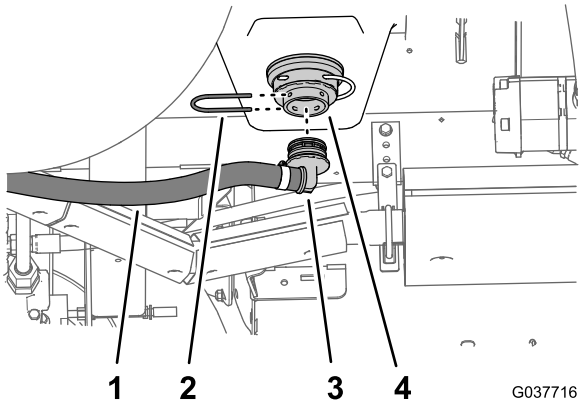

Figure 76

1. Drain hose—2.5 x 67 cm (1 x 26-1/2 inches)
2. Retainer
3. 90° hose fitting
4. Adapter fitting (bottom of the sprayer tank)

5. Secure the 90° hose fitting to the adapter fitting with the retainer (Figure 76) that you removed in step 1 of Removing the Bypass and Drain Hoses (page 14).

Installing the Bypass Hose

1. Assemble the 90° barbed fitting of the bypass hose—2.5 x 64 cm (1 x 25 inches) onto the quick-connect fitting at the bypass-shutoff valve (Figure 77 and Figure 78).

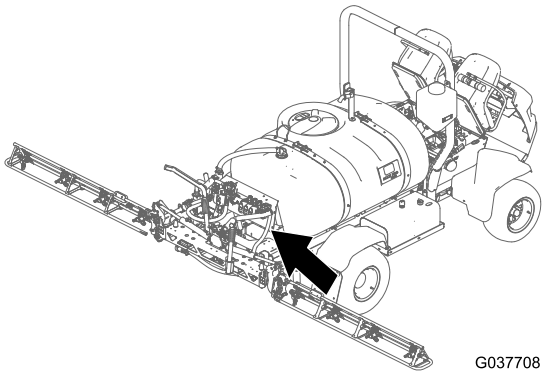

Figure 77

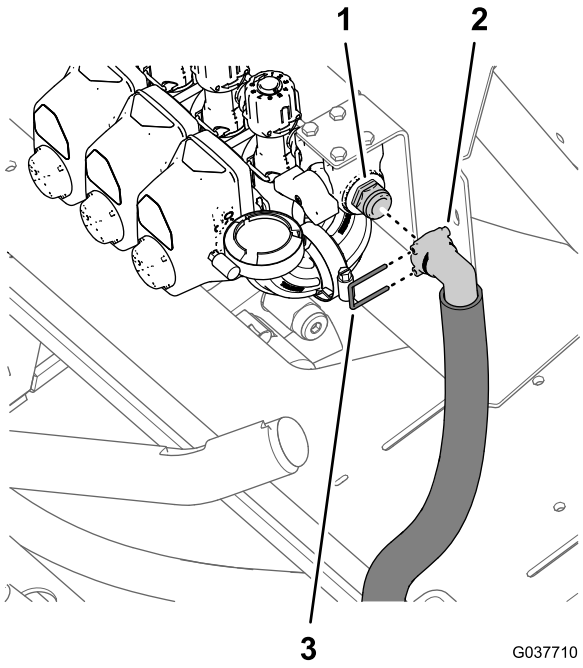

Figure 78

1. Quick-connect fitting (bypass-shutoff valve)
2. 90° barbed fitting (bypass hose)
3. Retainer

2. Secure the 90° barbed fitting to the quick-connect fitting with the retainer that comes with the bypass and drain-hose assembly (Figure 78).
3. Secure the bottom of the bypass hose to the rear saddle plate of the machine (Figure 79) with the support clamp, flange-head bolt (5/16 x 3/4 inch), and washer (5/16 inch).

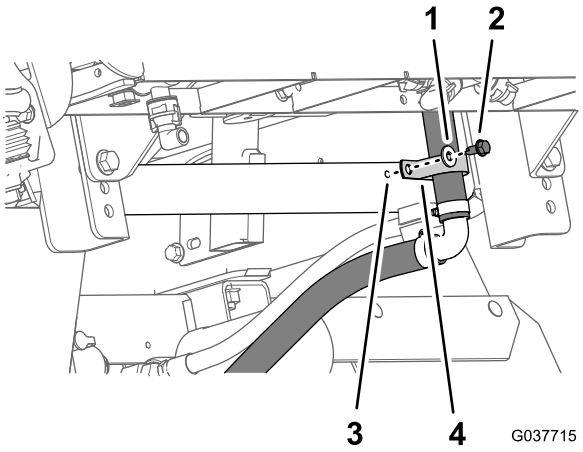

Figure 79

1. Washer (5/16 inch)
2. Flange-head bolt (5/16 x 3/4 inch)
3. Rear saddle plate (machine)
4. Support clamp

Installing the Drain Valve

1. Assemble the cable of the lynch pin, flange-head bolt (5/16 x 1 inch), and flange locknut (5/16 inch) that you removed in step 4 of Preparing the Machine (page 5) to the hole 8 mm (5/16 inch) in the rear, outboard corner of the sprayer-pump bracket (Figure 80 and Figure 81).

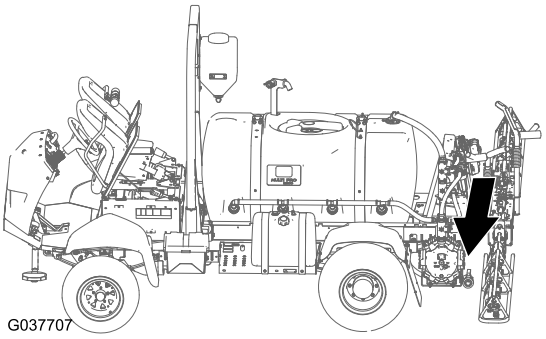

Figure 80

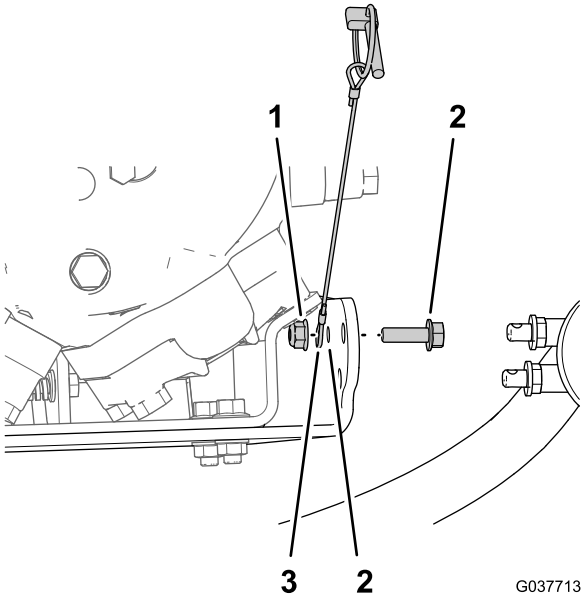

Figure 81

1. Flange locknut (5/16 inch)
2. Flange-head bolt (5/16 x 1 inch)
3. Cable (lynch pin)
4. Hole 8 mm (5/16 inch)—sprayer-pump bracket

2. Ensure that the 2 rubber washers are assembled to the 2 mount pegs of the drain valve (Figure 82).

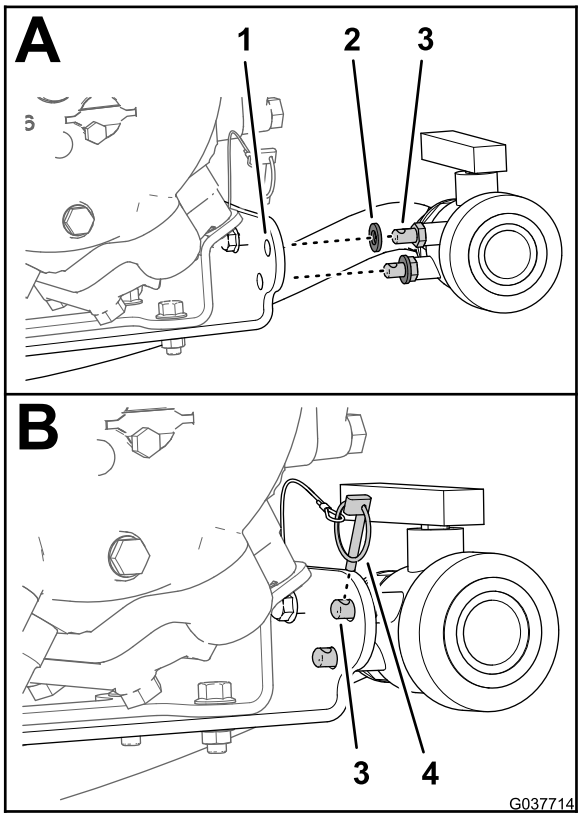

Figure 82

1. Sprayer-pump bracket
2. Rubber washer
3. Mount peg
4. Lynch pin

3. Align the 2 mount pegs through the 2 holes 11 mm (7/16 inch) in the sprayer-pump bracket (Figure 82).
4. Secure the drain valve to the pump bracket with the lynch pin (Figure 82).

14

Installing the Boom-Section Hoses

Parts needed for this procedure:

1	Supply hose—left boom section—2 x 205 cm (3/4 x 80-13/16 inches)
1	Supply hose—center boom section— 2 x 58 cm (3/4 x 22-13/16 inches)
1	Supply hose—right boom section—2 x 170 cm (3/4 x 66-13/16 inches)

Routing and Connection the Supply Hoses at the Boom-Section Valves

1. Route the left, center, and right boom-supply hoses to the boom-section valves as shown in Figure 7.

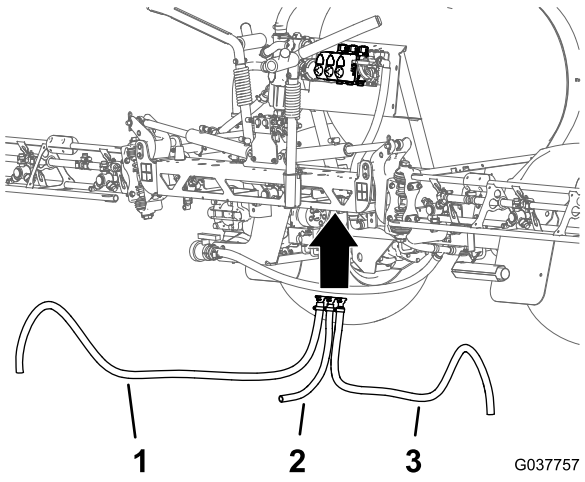

Figure 83

1. Left boom-supply hose
2. Center boom-supply hose
3. Right boom-supply hose

2. Assemble the straight barbed fitting of the supply hose for the left boom-supply hose onto the quick-connect fitting at the left-boom-section valve (Figure 84).

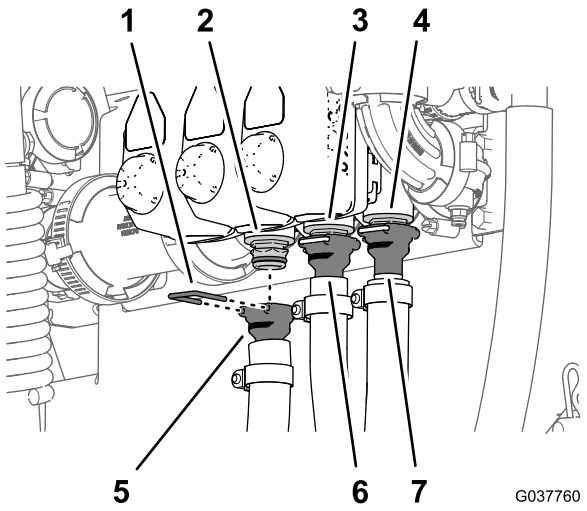

Figure 84

1. Retainer
2. Quick-connect fitting (left-boom-section valve)
3. Quick-connect fitting (center-boom-section valve)
4. Quick-connect fitting (right-boom-section valve)
5. Straight barbed fitting—supply hose for the left-boom section—2 x 205 cm (3/4 x 80-13/16 inches)
6. Straight barbed fitting—supply hose for the center-boom section—2 x 58 cm (3/4 x 22-13/16 inches)
7. Straight barbed fitting—supply hose for the right-boom section—2 x 170 cm (3/4 x 66-13/16 inches)

3. Secure the straight barbed fitting to the quick-connect fitting with the retainer that is supplied with the hose (Figure 84).
4. Repeat steps 2 and 3 for the center and right-boom-section valves and center and right boom-supply hose.

Installing the Supply Hoses to the Boom Sections

1. Assemble the center boom-supply hose onto the T-fitting at the center-boom section (Figure 85).

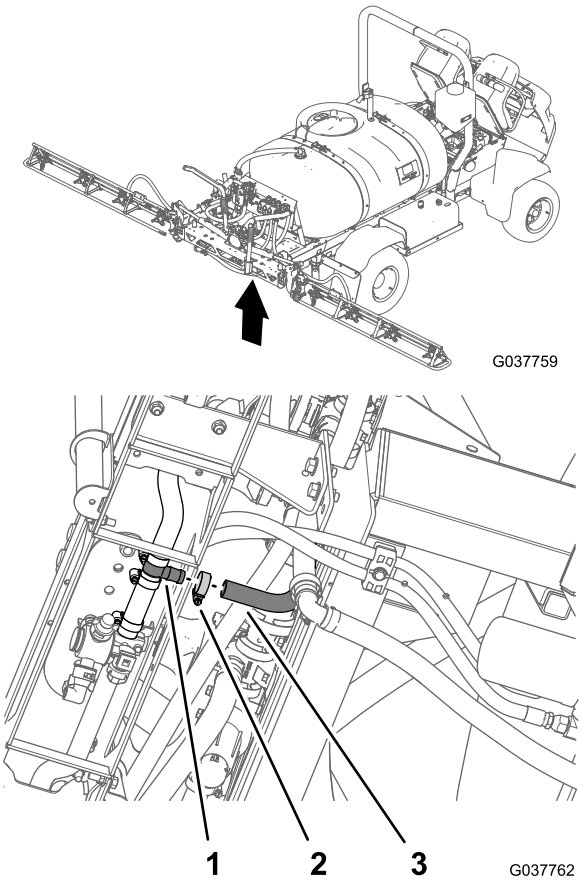

Figure 85

1. T-fitting
2. Hose clamp
3. Supply hose for the center boom—2 x 58 cm (3/4 x 22-13/16 inches)

2. Secure the hose to the T-fitting with a hose clamp that you removed in Removing the Boom-Section Hoses (page 20).
3. Route the right boom-supply hose through the support clamp at the end of the center-boom section (Figure 86).

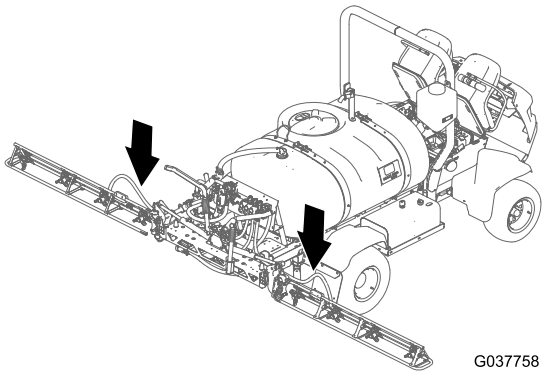

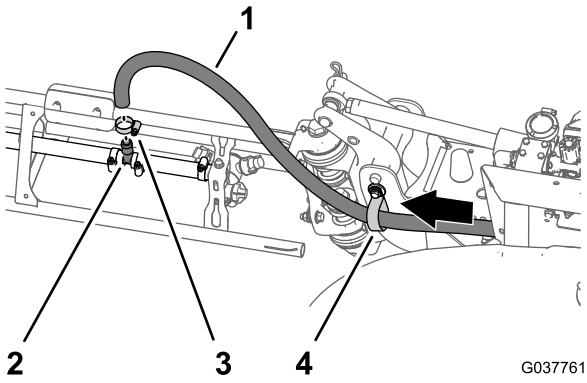

Figure 86

Right-Boom Section Shown

1. Supply hose—right boom 2 x 170 cm (3/4 x 66-13/16 inches)
2. Hose clamp
3. T-fitting
4. Support clamp

4. Assemble the center boom-supply hose onto the T-fitting at the right-boom section (Figure 86).
5. Secure the hose to the T-fitting with a hose clamp that you removed in Removing the Boom-Section Hoses (page 20).
6. Repeat steps 3 through 5 for the left boom-supply hose at the left-boom section.

15

Installing the Shutoff Valve and Hose for the Optional Spray Gun Kit or Electric Hose-Reel Kit

Parts needed for this procedure:

1	Flange shutoff valve
1	Bracket (nylon)
1	90° elbow (with pressure port)
1	Gasket—25 x 35 mm (1 x 1-3/8 inches)
1	Flange clamp—40 to 64 mm (1-9/16 to 2-1/2 inches)
4	Washer (5/16 x 13/16 inch)
4	Bolt (6 x 16 mm)
2	Hose clamp
1	Quick-connect fitting (socket)
1	Straight barbed fitting (1/2 inch)
1	Hose—1.3 x 762 cm (1/2 x 300 inches)
1	Hose—1.3 x 180 cm (1/2 x 71 inches)
3	Cable ties

Preparing the Shutoff Valve

1. If not assembled, insert the 4 stainless steel nuts into the slots in the nylon bracket for the flange shutoff valve (Figure 87).

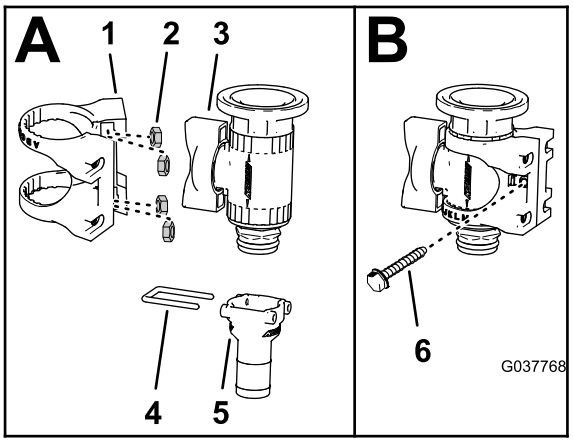

Figure 87

1. Nylon bracket
2. Stainless steel nut
3. Flange shutoff valve
4. Retainer
5. Straight barbed fitting (3/4 inch)
6. Screw (6-32 x 5/8 inch)

2. Remove the straight barbed fitting (3/4 inch) and retainer from the shut off valve (Figure 87).

   Note: If you are installing the valve conversion kit onto a machine with an **optional electric hose-reel kit**, retain the straight barbed fitting (3/4 inch) and retainer for installation in Installing the Supply Hose—Machines with the Optional Electric Hose-Reel Kit (page 42). If you are you installing the valve conversion kit onto a machine with an **optional spray gun kit**, you no longer need the straight barbed fitting (3/4 inch) and retainer.

3. Assemble the flange shutoff valve into the nylon bracket as shown in (Figure 87).

4. Secure the nylon bracket to the flange shutoff valve with the screw (6-32 x 5/8 inch) as shown in (Figure 87).

5. Assemble the T-fitting that you removed in step 4 of Disconnecting Pressure-Sense Tube and Supply Hose—Optional Spray-Gun Kit or Electric Hose-Reel Kit (page 9) into the 90° elbow with a pressure port (Figure 88).

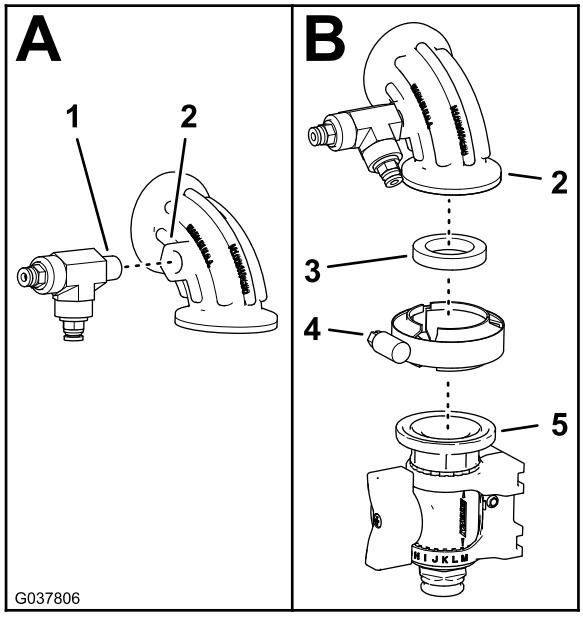

Figure 88

1. T-fitting
2. 90° elbow (with pressure port)
3. Gasket—25 x 35 mm (1 x 1-3/8 inches)
4. Flange clamp—40 to 64 mm (1-9/16 to 2-1/2 inches)
5. Flange shutoff valve

6. Assemble the 90° elbow to the flange shutoff valve (Figure 88) with a gasket—25 x 35 mm (1 x 1-3/8 inches)) and flange clamp—40 to 64 mm (1-9/16 to 2-1/2 inches).

Installing the Shutoff Valve

1. Remove the flange clamp, 90° elbow assembly, and gasket at the flange of the right-boom-section valve (Figure 89).

   Note: Retain the flange clamp and gasket for installation in step 2. You no longer need the 90° elbow assembly.

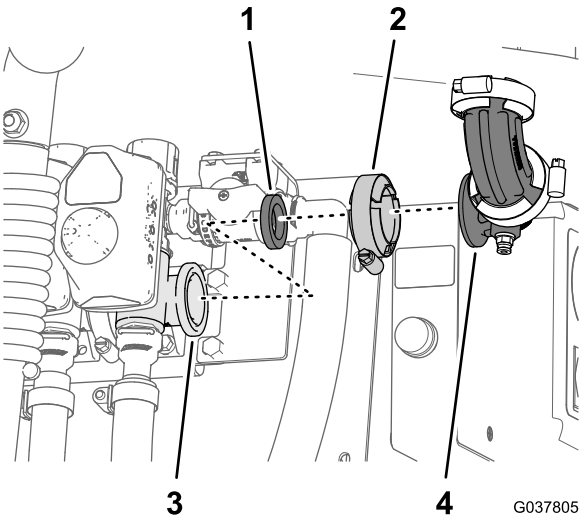

Figure 89

1. Gasket
2. Flange clamp
3. Flange (boom-section valve)
4. 90° elbow assembly

2. Assemble the 90° elbow and flange shutoff valve to the flange of the right-boom-section valve with the flange clamp and gasket that you removed in step 1.

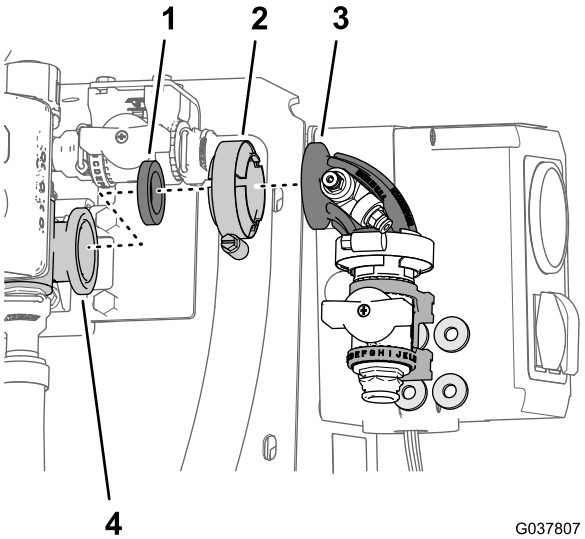

Figure 90

1. Gasket
2. Flange clamp
3. 90° elbow and flange shutoff valve
4. Flange (right-boom-section valve)

3. Align the 4 washers (5/16 x 13/16 inch) between the nylon bracket of the flange shutoff valve and the valve mount (Figure 91).

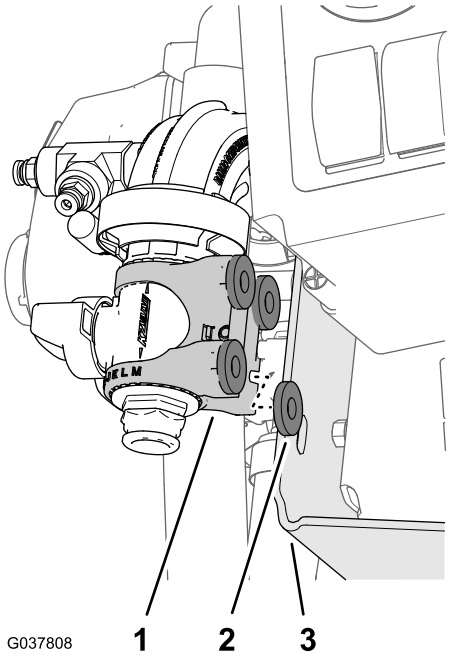

Figure 91

1. Nylon bracket
2. Washers (5/16 x 13/16 inch)
3. Valve mount

4. Assemble the nylon bracket and washers to the valve mount with 4 bolts (6 x 16 mm) as shown in Figure 92.

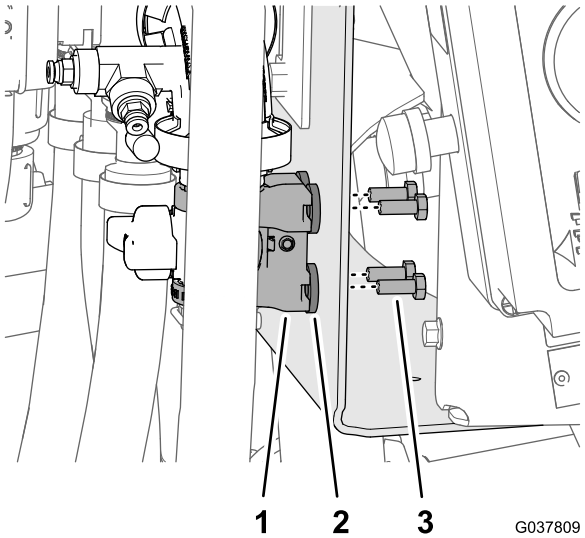

Figure 92

1. Nylon bracket
2. Washer (5/16 x 13/16 inch)
3. Bolt (6 x 16 mm)

Installing the Supply Hose—Machines with the Optional Spray Gun Kit

1. Assemble the quick-connect fitting (socket) to the straight barbed fitting (1/2 inch) to the hose—1.3 x 762 cm (1/2 x 300 inches) with the clamp that you removed in Removing the Spray Gun from the Supply Hose (page 18) as shown in Figure 93.

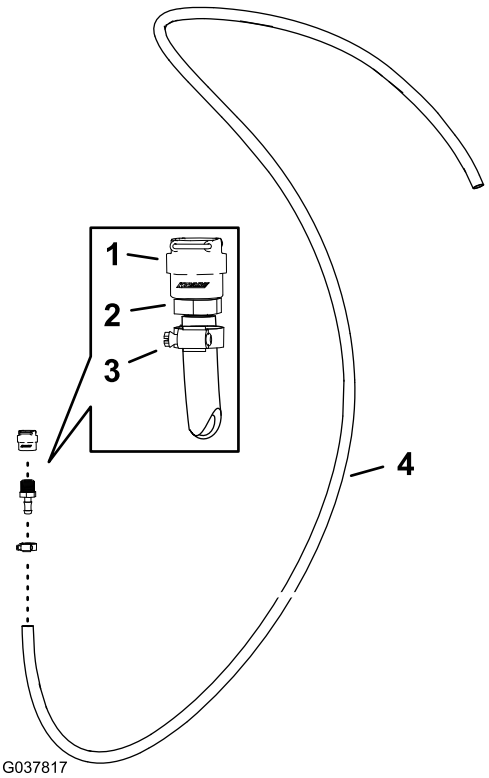

Figure 93

1. Quick-connect fitting (socket)
2. Straight barbed fitting (1/2 inch)
3. Hose clamp
4. Hose—1.3 x 762 cm (1/2 x 300 inches)

2. Assemble the quick-connect fitting (socket) of the hose to the quick-connect fitting of the flange shutoff valve (Figure 94).

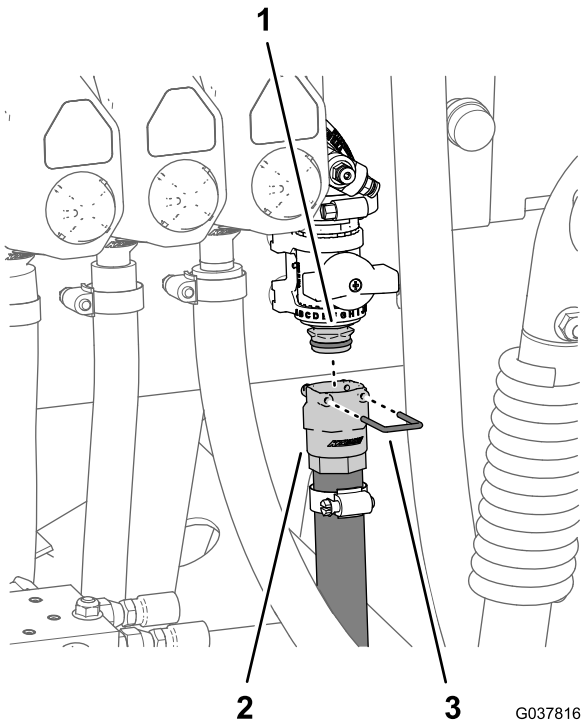

Figure 94

1. Quick-connect fitting (flange shutoff valve)
2. Quick-connect fitting (socket)
3. Retainer

3. Secure the quick-connect fittings of the hoses and the flange shutoff valve with the retainer provided with the quick-connect fitting of the hose (Figure 94).
4. Route the supply hose forward along the sprayer tank toward the spray-gun bracket, and secure the hose to the tank frame with the 3 cable ties (Figure 95).

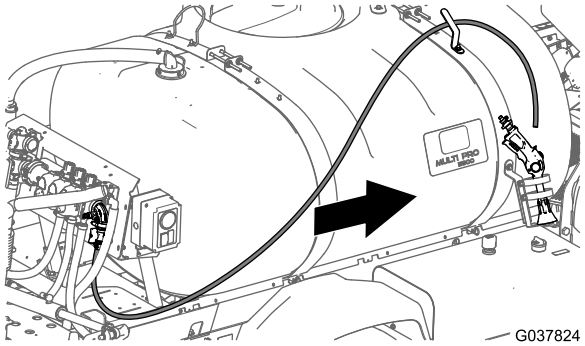

Figure 95

5. Assemble the barb of the spray gun that you removed in Removing the Spray Gun from the Supply Hose (page 18) to the supply hose with a hose clamp (Figure 96).

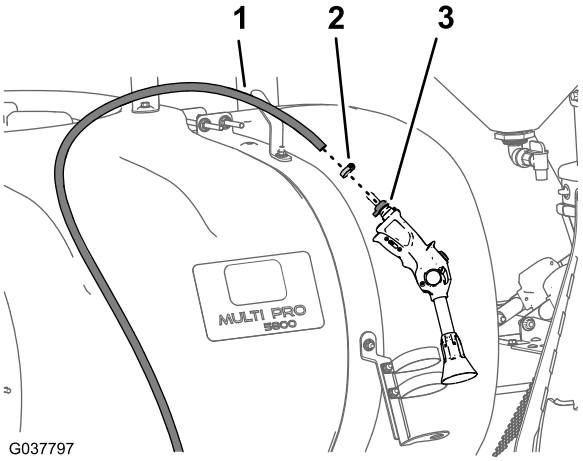

Figure 96

1. Supply hose
2. Hose clamp
3. Hose barb (spray gun)

6. Place the spray gun in the spray-gun bracket, and hose onto the hose hook.

Installing the Supply Hose—Machines with the Optional Electric Hose-Reel Kit

1. Assemble the straight barbed fitting (3/4 inch) that you removed in step 2 of Preparing the Shutoff Valve (page 39) to the hose—1.3 x 180 cm (1/2 x 71 inches) with a hose clamp (Figure 97).

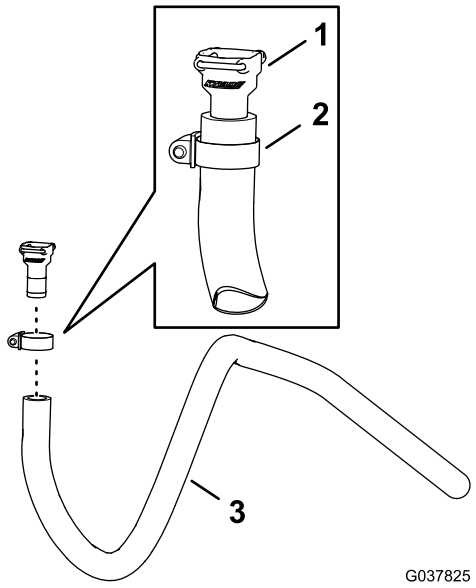

Figure 97

1. Straight barbed fitting (3/4 inch)
2. Hose clamp
3. Hose—1.3 x 180 cm (1/2 x 71 inches)

2. Assemble the straight barbed fitting of the hose to the quick-connect fitting of the flange shutoff valve (Figure 98).

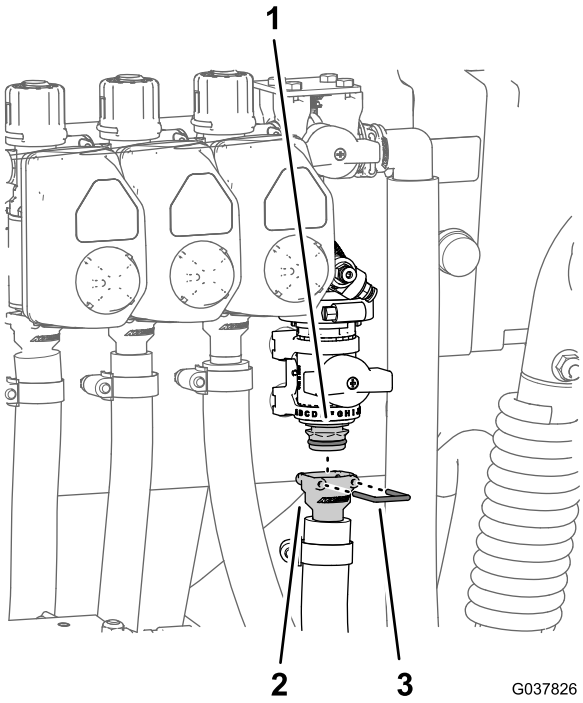

Figure 98

1. Quick-connect fitting (flange shutoff valve)
2. Straight barbed fitting
3. Retainer

3. Secure the straight barbed fitting and the quick-connect fitting with the retainer with the retainer provided with the quick-connect fitting of the hose(Figure 98).
4. Route the supply hose forward along the sprayer tank toward the hose reel, and secure the hose to the tank frame with the 3 cable ties (Figure 99).

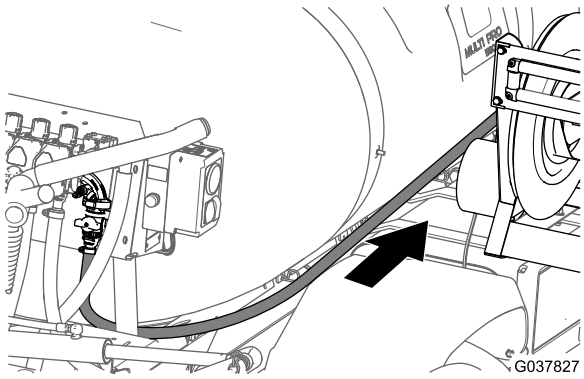

Figure 99

5. Assemble the supply hose onto the straight-hose barb of the hose reel, and secure the hose with a hose clamp (Figure 100).

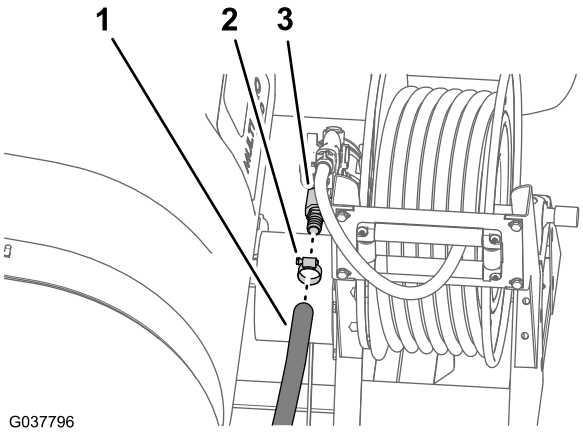

Figure 100

1. Supply hose
2. Hose clamp
3. Straight-hose barb

16

Assembling the Rear Wiring Harness to the Machine

Parts needed for this procedure:

1	Rear wire harness
3	Cable tie

Routing Wire Harness Along the Frame Tube

1. Locate the 168 cm (66 inches) branch of the new electrical harness (Figure 101).

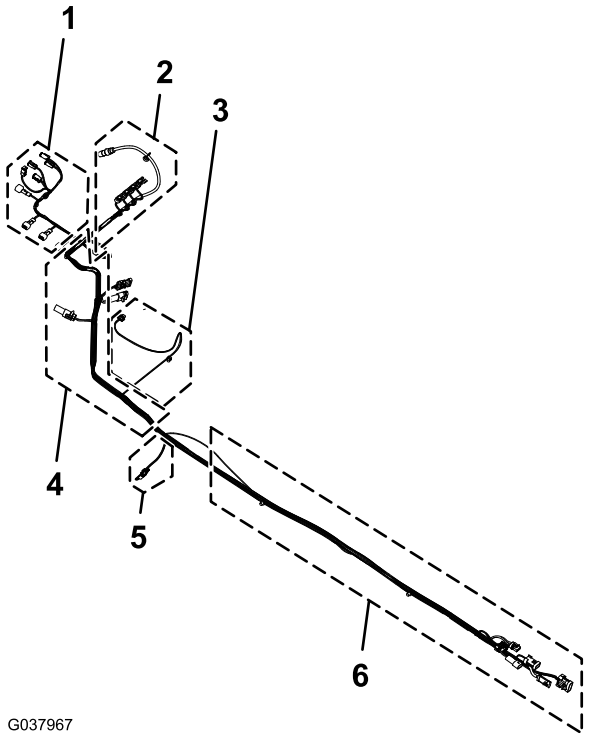

Figure 101

1. 64 cm (25 inches)—**lift cylinder solenoids**
2. 76 cm (30 inches) wire-harness branch—**left, center, and right spray valves, agitation valve, and flow meter**
3. 74 cm (29 inches) wire-harness branch—**spray-pump solenoid**
4. wire-harness branch—**rinse pump, hose-reel power, and hose reel**
5. 30 cm (12 inches) wire-harness branch—**speed sensor**
6. 168 cm (66 inches) wire-harness branch—front harness interface connectors

2. Route the 168 cm (66 inches) of the new electrical harness between the valve mount and right support for the manifold mount (Figure 102).

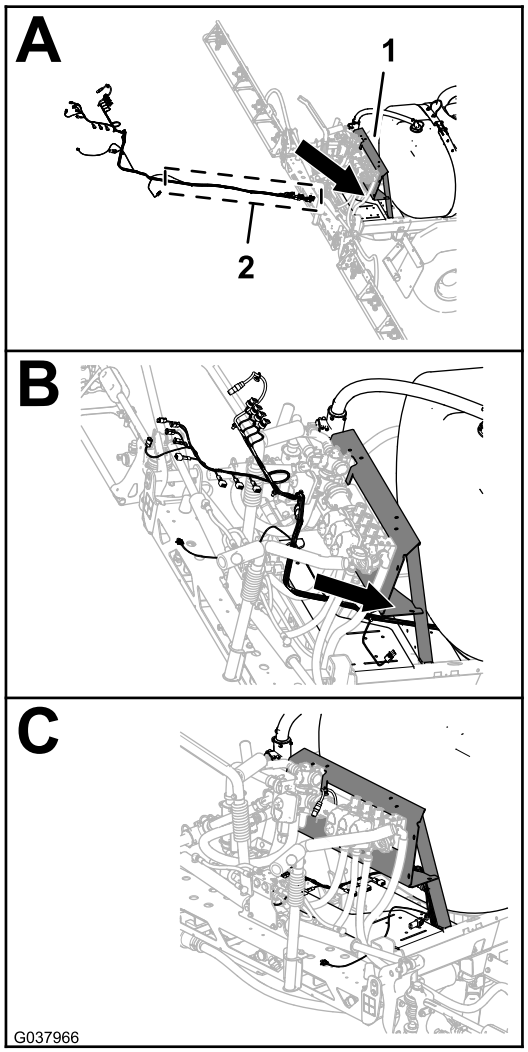

Figure 102

1. Manifold mount
2. 168 cm (66 inches) wire-harness branch—front harness interface connectors

3. 168 cm (66 inches) wire-harness branch of the electrical harness forward along the right frame tube (Figure 103).

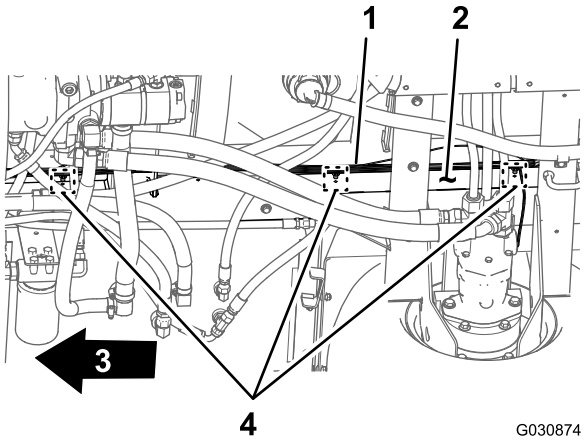

Figure 103

1. Rear wire harness—168 cm (66 inches) branch
2. Right frame tube
3. Front of the machine
4. Push-in fasteners and cable tie locations

4. Insert the 3 push-in fasteners of the 168 cm (66 inches) branch of the rear wire harness into the holes in the right frame tube (Figure 103) where the push-in fasteners of the old rear wire harness were removed; refer to step 3 in Disconnecting the Front and Rear Wire Harnesses (page 10).

Connecting the Front and Rear Wire Harnesses

Note: Use a machine hoist when connecting the front and rear wire harnesses.

1. From under the machine along the right frame tube, locate the electrical connectors for the front and rear wire harnesses of the machine (Figure 104).

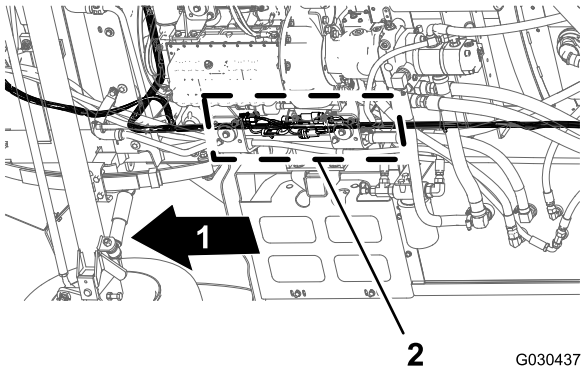

Figure 104

1. Front of the machine
2. Connector interfaces (front and rear wire harnesses)

Note: You will not use the 3-socket connector of the front wire harness (Figure 105).

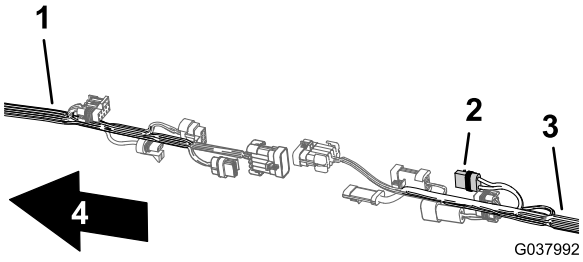

Figure 105

1. Front wire harness
2. 2-socket connector—**not used** (2015 and newer hose-reel power)
3. Rear wire harness
4. Front of the machine

2. Connect the 10-socket connector of the front wire harness for the sprayer-harness interconnect into the 10-pin connector of the rear wire harness for the sprayer-harness interconnect (Figure 106).

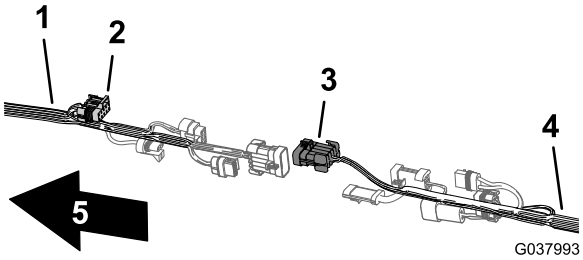

Figure 106

1. Front wire harness
2. 10-socket connector—sprayer-harness interconnect (front wire harness)
3. 10-pin connector—sprayer-harness interconnect (rear wire harness)
4. Rear wire harness
5. Front of the machine

3. Connect the 3-socket connector of the front wire harness for the flow meter into the 3-pin connector of the rear wire harness for the flow meter (Figure 107).

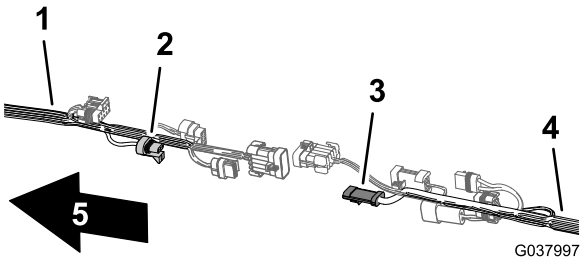

Figure 107

1. Front wire harness
2. 3-socket connector—flow meter(front wire harness)
3. 3-pin connector—flow meter (rear wire harness)
4. Rear wire harness
5. Front of the machine

4. Connect the 8-pin connector of the front wire harness for the sprayer-harness interconnect into the 8-socket connector of the rear wire harness for the rate switch (Figure 108).

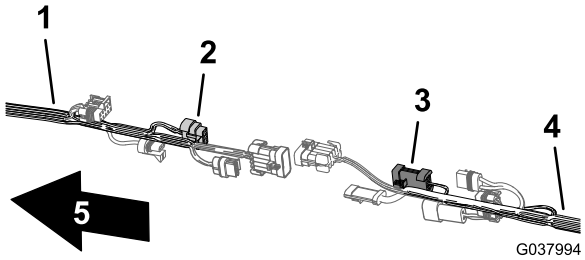

Figure 108

1. Front wire harness
2. 8-pin connector—sprayer-harness interconnect (front wire harness)
3. 8-socket connector—rate switch (rear wire harness)
4. Rear wire harness
5. Front of the machine

5. Connect the 2-pin connector of the front wire harness for the rinse pump into the 2-socket connector of the rear wire harness for the rinse pump (Figure 109).

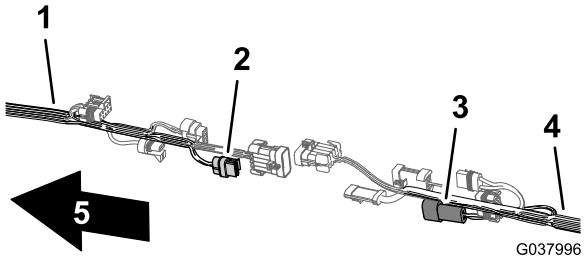

Figure 109

1. Front wire harness
2. 2-socket connector—rinse pump (rear wire harness)
3. 2-pin connector—rinse pump (front wire harness)
4. Rear wire harness
5. Front of the machine

6. Connect the 10-pin connector of the front wire harness for the sprayer-harness interconnect into the 10-socket connector of the rear wire harness for the sprayer-harness interconnect (Figure 110).

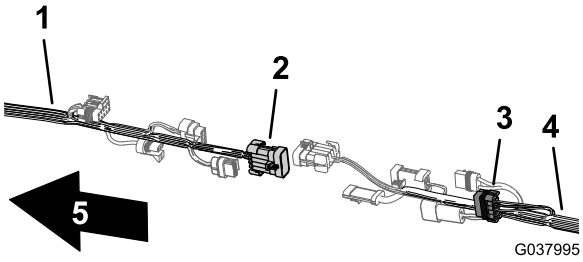

Figure 110

1. Front wire harness
2. 10-pin connector—sprayer-harness interconnect (front wire harness)
3. 10-socket connector—sprayer-harness interconnect (rear wire harness)
4. Rear wire harness
5. Front of the machine

Routing the Pressure-Sense Tube for the Dash Gauge along the Rear Wire Harness

1. Route the pressure-sense tube for the dash gauge along the rear wire harness of the machine (Figure 111).

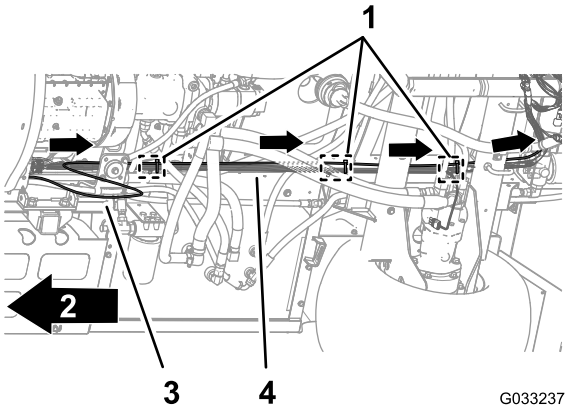

Figure 111

1. Cable ties (3 push-in fastener—chassis anchor points)
2. Front of the machine
3. Pressure-sense tube
4. Rear wire harness

2. Secure the pressure-sense tube to the rear wire harness with 3 cable ties adjacent to the 3 push-in fasteners at the chassis anchor points for the rear wire harness (Figure 111).

Important: Do not pinch or collapse the pressure-sense tube; tighten the cable ties only enough to support the tube.

17

Connecting the Rear Wire Harness

No Parts Required

Routing the Wire Harness at the Manifold Mount

1. Route the 76 cm (30 inches) branch of the wire harness inboard of the support strut for the valve mount and rearward toward the boom-section valves and agitation valve as shown in Figure 112.

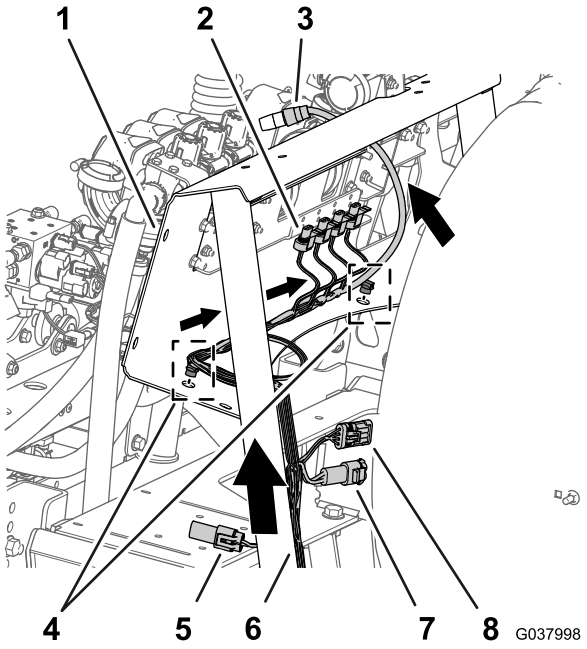

Figure 112

1. Manifold mount
2. 3–socket connector (boom-section valves and agitation valve)
3. 3-socket connector (flow meter)
4. Push-in fastener
5. 2-socket connector (rinse pump)
6. 76 cm (30 inches) wire-harness branch—left, center, and right spray valves, agitation valve, and flow meter
7. 2-pin connector (2015 and newer hose-reel power)
8. 3-socket connector (hose reel)

2. Insert the push-in fasteners of the 76 cm (30 inches) branch into the holes in the lower flange of the manifold mount (Figure 112).

Routing the Wire Harness for the Sprayer Pump

1. Route the 74 cm (29 inches) wire-harness branch for the spray-pump solenoid across the top of the sprayer frame channel and down toward the sprayer-pump solenoid (Figure 113).

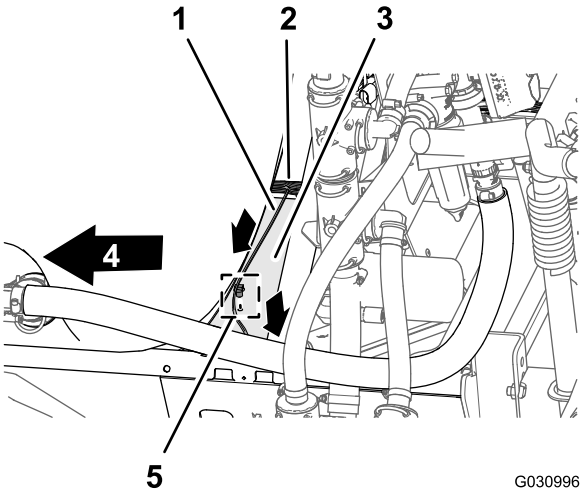

Figure 113

1. 74 cm (29 inches) wire-harness branch—spray-pump solenoid
2. 76 cm (30 inches) wire-harness branch—left, center, and right spray valves, agitation valve, and flow meter
3. Channel (sprayer frame)
4. Front of the machine
5. Push-in fastener

2. Insert the push-in fastener of the 74 cm (29 inches) wire-harness branch into the hole in the sprayer frame channel (Figure 113).

Connecting the Wire Harness to the Boom-Section Valves and the Agitation Valve

1. Connect the 3-pin connector for the actuator of the agitation valve into the 3-socket connector labeled AGITATION VALVE of the 76 cm (30 inches) wire-harness branch (Figure 114).

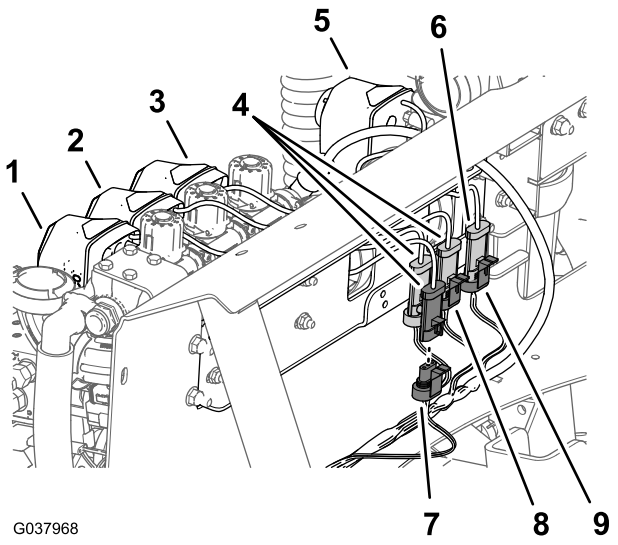

Figure 114

1. Left actuator (boom-section valve)
2. Center actuator (boom-section valve)
3. Right actuator (boom-section valve)
4. 3-pin connector (harnesses—section-valve actuators)
5. Actuator (agitation-valve)
6. 3-socket connector (agitation valve)
7. 3-socket connector (labeled RIGHT-SPRAY VALVE)
8. 3-socket connector (labeled LEFT-SPRAY VALVE)
9. 3-socket connector (labeled AGITATION VALVE)

2. Connect the 3-pin connector for the actuator of the left-boom-section valve into the 3-socket connector labeled LEFT-SPRAY VALVE.
3. Connect the 3-pin connector for the actuator of the center-boom-section valve into the 3-socket connector labeled CENTER-SPRAY VALVE.
4. Connect the 3-pin connector for the actuator of the right-boom-section valve into the 3-socket connector labeled RIGHT-SPRAY VALVE.

Connecting the Wire Harness to the Solenoids for the Lift-Cylinder Manifold

1. At the lower left solenoid, connect the 2-socket connector of the rear wire harness labeled LEFT DOWN SOLENOID into the 2-pin connector for the left down solenoid (Figure 115).

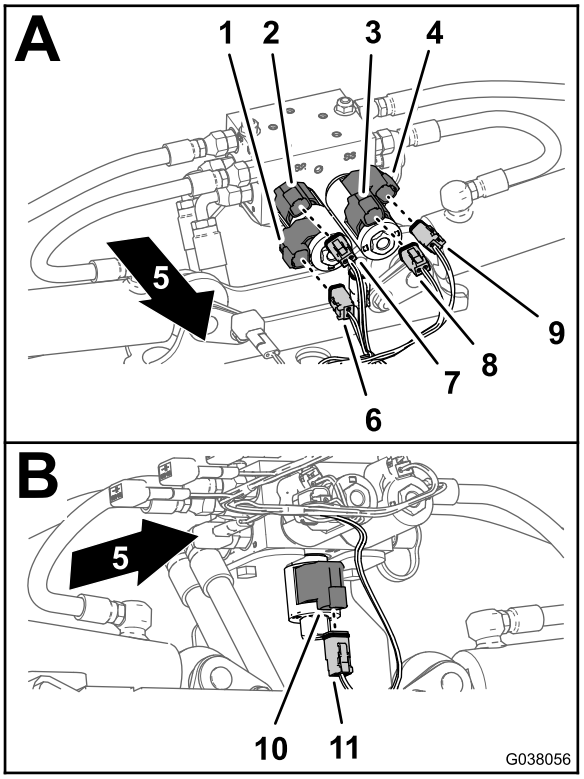

Figure 115

1. 2-pin connector—right down solenoid (lift-cylinder manifold)
2. 2-pin connector—right up solenoid (lift-cylinder manifold)
3. 2-pin connector—left up solenoid (lift-cylinder manifold)
4. 2-pin connector—left down solenoid (lift-cylinder manifold)
5. Front of the machine
6. 2-socket connector—RIGHT DOWN SOLENOID (main-harness connector)
7. 2-socket connector—RIGHT UP SOLENOID (main-harness connector)
8. 2-socket connector—LEFT UP SOLENOID (main-harness connector)
9. 2-socket connector—LEFT DOWN SOLENOID (main-harness connector)
10. 2–pin connector—enable solenoid (lift-cylinder manifold)
11. 2-socket connector—ENABLE SOLENOID (main-harness connector)

2. At the upper left solenoid, connect the 2-socket connector of the rear wire harness labeled LEFT UP SOLENOID into the 2-pin connector for the left up solenoid (Figure 115).

3. At the upper right solenoid, connect the 2-socket connector of the rear wire harness labeled RIGHT UP SOLENOID into the 2-pin connector for the right up solenoid (Figure 115).
4. At the lower right solenoid, connect the 2-socket connector of the rear wire harness labeled RIGHT DOWN SOLENOID into the 2-pin connector for the right down solenoid (Figure 115).
5. At the bottom of the lift-cylinder manifold, connect the 2-socket connector of the rear wire harness labeled ENABLE SOLENOID into the 2-pin connector for the enable solenoid (Figure 115).

Connecting the Wire Harness to the Sprayer Pump and the Speed Sensor

1. At the back of the machine—inboard of the sprayer pump, connect the 2-socket connector of the 86 cm (34 inch) wire-harness branch into the 2-pin connector of the relay for the pump (Figure 116).

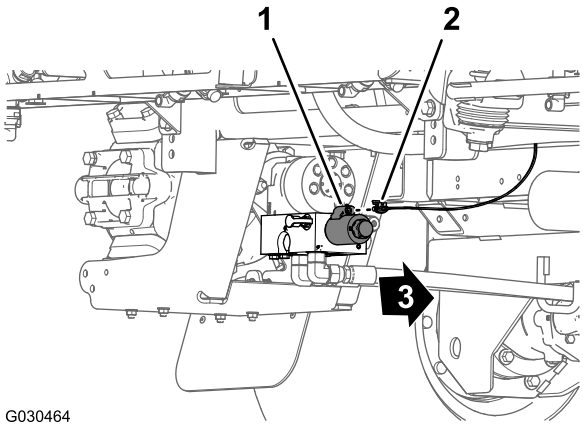

Figure 116

1. 2-pin connector (pump relay)
2. 2-socket connector—86 cm (34 inch) wire-harness branch
3. Front of the machine

2. At the back of the machine (between the right frame tube and the right fender) connect the 3-pin connector of the speed-sensor harness at the right hydraulic-traction motor into the 3-socket connector (unmarked) of the rear wire harness (Figure 117).

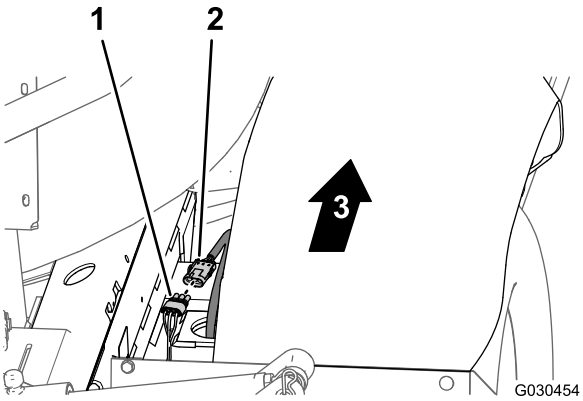

Figure 117

1. 3-socket connector (rear wire harness)
2. 3-pin connector (hydraulic-motor harness
3. Front of the machine

18

Connecting the Rear Wire Harness to the Optional Attachments

Parts needed for this procedure:

1	Jumper harness (optional spray gun kit or electric hose-reel kit)

Connecting the Wire Harness to the Optional Spray Gun Kit or Optional Electric Hose-Reel Kit

1. At the back of the machine, remove the cap from the 4-socket connector of the rear wire harness labeled HOSE REEL (Figure 118)

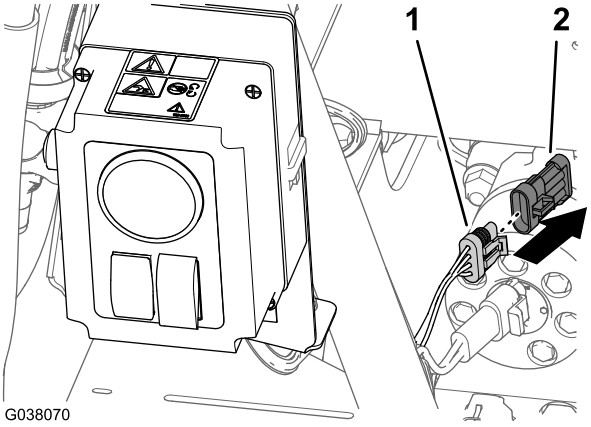

Figure 118

1. 4-socket connector (rear wire harness—labeled HOSE REEL)
2. Cap

2. Connect the 4 pin connector of the jumper harness into the 4-socket connector of the rear wire harness labeled HOSE REEL (Figure 119).

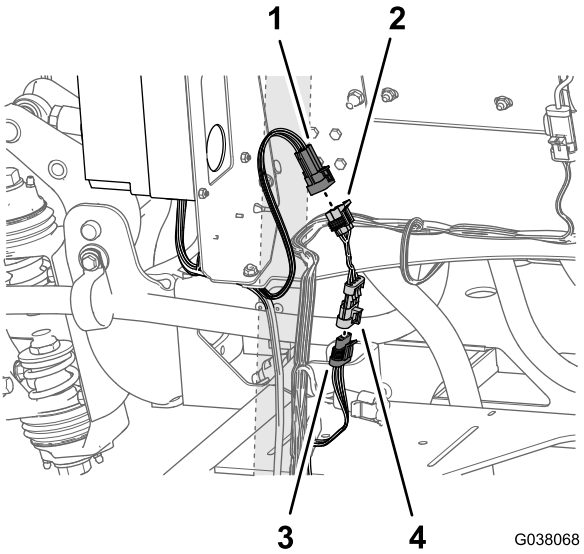

Figure 119

1. 6-pin connector—labeled RATE SWITCH INTERCONNECT (OPTIONAL SPRAY GUN).
2. 6-socket connector (jumper harness)
3. 4-socket connector (rear wire harness—labeled HOSE REEL)
4. 4 pin connector (jumper harness)

3. At the back of the control box for the spray gun or electric hose reel, locate the 6-pin connector (Figure 119) labeled RATE SWITCH INTERCONNECT (OPTIONAL SPRAY GUN).
4. Connect the 6-pin connector (rate switch interconnect) into the 6-socket connector of the jumper harness (Figure 119).

Note: The 2-pin connector of the rear wire harness labeled HOSE REEL POWER is not used.

Connecting the Wire Harness to the Optional Foam-Marker Kit

1. At the end of the 236 cm (93 inch) branch of the wire harness, align the 4-socket connector of the wire harness for the finishing kit with the 4-pin connector of the wire harness from the compressor (Figure 120).

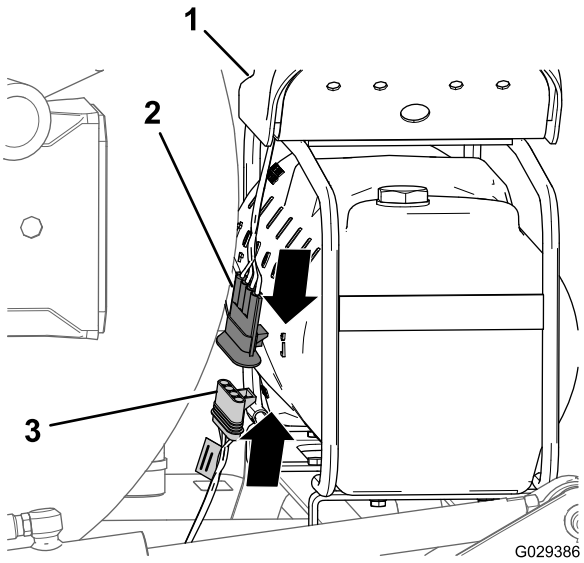

Figure 120

1. Compressor
2. 4-pin connector (wire harness for the compressor)
3. 4-socket connector (wire harness for the finishing kit)

2. Insert the 4-pin connector into the 4-socket connector (Figure 120).

   Note: Press the connectors together until the latch snaps securely.

Connecting the Wire Harness to the Optional Tank-Rinse Kit

1. Connect the 6-pin connector of the rinse-pump harness from the 6-socket connector of the rear wire harness labeled RINSE PUMP (Figure 121).

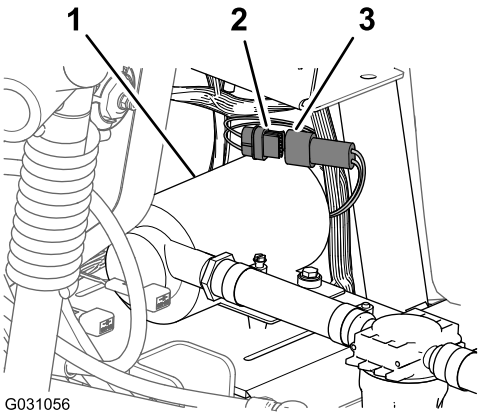

Figure 121

1. Rinse pump
2. 6-socket connector (rear wire harness—labeled RINSE PUMP)
3. 6-pin connector (rinse-pump harness)

2. Align the rinse-pump cover over saddle plate for the rinse pump (Figure 122).

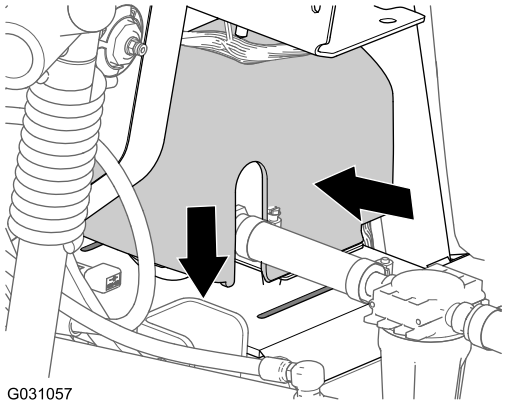

Figure 122

3. Press together the sides of the rinse-pump cover and align the tabs of the cover with the saddle plate (Figure 122).
4. Insert the tabs into the slots and release the sides of the cover (Figure 122).

Connecting the Wire Harness to the Optional Pro Control Kit

Connect the 3-socket connector of the 76 cm (30 inches) wire-harness branch for the flow meter (not labeled) into the 3-pin connector of the harness of the flow meter (Figure 123).

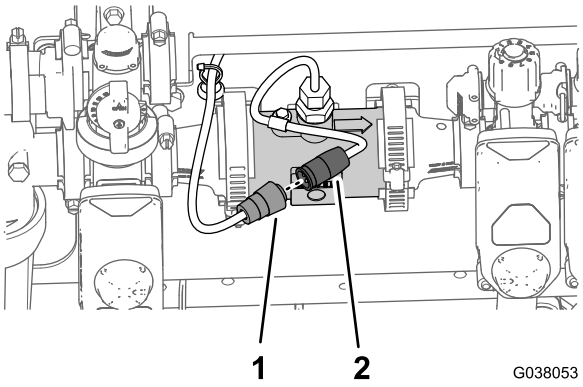

Figure 123

1. 3-socket connector (rear wire harness—76 cm (30 inches) branch)
2. 3-pin connector (flow-meter harness)

19

Connecting the Pressure-Sense Tube for the Dash Gauge

No Parts Required

Connecting the Pressure-Sense Tube for the Dash Gauge—Machines Without an Optional Hose-Reel Kit

1. Align the end of the pressure-sense tube (plastic) for the pressure gauge in the dash with the locking collar for the tube coupler (Figure 124).

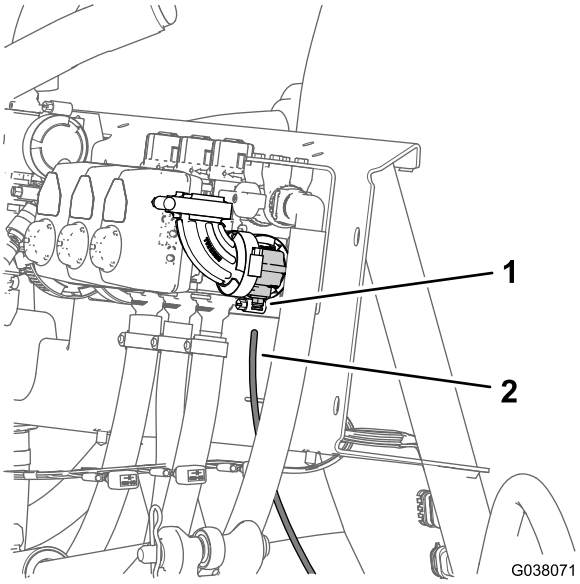

Figure 124

1. Locking collar (tube coupler)
2. Pressure-sense tube (dash-pressure gauge)

2. Insert the sense tube into the locking collar until the tube is fully seated (Figure 124).

Connecting the Pressure Sense-Tube—Optional Spray Gun Kit or Optional Electric Hose-Reel Kit

1. Align the end of the pressure-sense tube (plastic) for the pressure gauge in the dash with the locking collar for the tube coupler at the T-fitting (Figure 125).

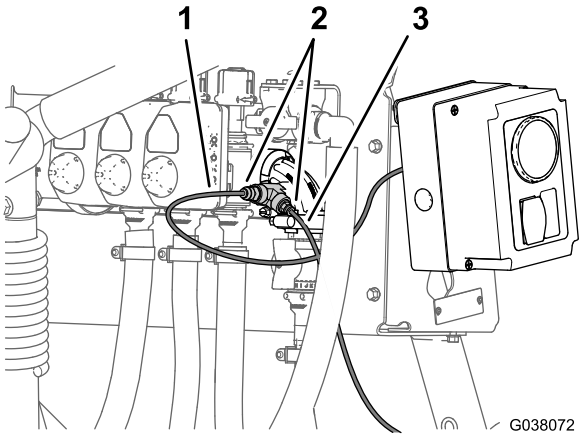

Figure 125

Optional Spray Gun Kit

1. Pressure-sense tube (spray gun or hose-reel gauge)
2. Pressure-sense tube (dash gauge)
3. Tube coupler (T-fitting)

2. Insert the sense tube into the locking collar until the tube is fully seated (Figure 125).
3. Align the end of the pressure-sense tube (plastic) for the pressure gauge in the control box for the spray gun kit or electric hose-reel kit with the locking collar for the tube coupler at the T-fitting (Figure 125).
4. Insert the sense tube into the locking collar until the tube is fully seated (Figure 125).

20

Completing the Installation of the Arag to KZ Valve Conversion Kit

No Parts Required

Procedure

1. Move the prop rod for the seats into the slots and tilt the seats down.
2. Connect the positive (red) cable to the positive (+) battery post and the negative (black) cable to the negative (–) battery post using the bolts and nuts; refer to Figure 4 in Disconnecting the Battery (page 6).
3. Slide the insulator boot over both battery posts ; refer to Figure 4 in Disconnecting the Battery (page 6).
4. Install the battery cover and secure it with the strap; refer to Figure 3 in Disconnecting the Battery (page 6).

Product Overview

Controls

Agitation Switch

The agitation switch is located on the center console to the right of the seat; refer to the *Operator's Manual* for your machine. Toggle this switch forward to turn on the agitation in the tank or rearward to stop the agitation. When the switch is turned on, a light on the switch illuminates. To operate the agitation function, run the sprayer-system pump and run the engine above low idle. The agitation valve is located behind the tank (Figure 126).

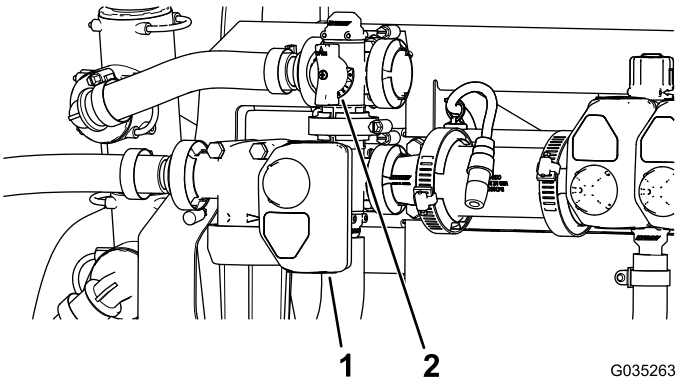

Figure 126

1. Actuator (agitation valve)
2. Agitation-bypass-valve handle

Agitation Bypass Valve

The agitation bypass valve redirects the flow of fluid to the sprayer-system pump when you turn off the agitation function (Figure 126). The agitation bypass valve is located above the agitation valve. You can adjust the bypass valve to ensure that the pressure remains constant when cycling the agitation on and off; refer to Calibrating the Agitation Bypass Valve (page 55).

Agitation Throttle Valve

The agitation throttle valve is a manually operated ball valve that controls flow to the agitation nozzles in the main tank. This valve allows the user to control the sprayer-system pressure at the agitation nozzles of the main tank when larger application rates are required. The agitation throttle valve is located above the pump (Figure 127).

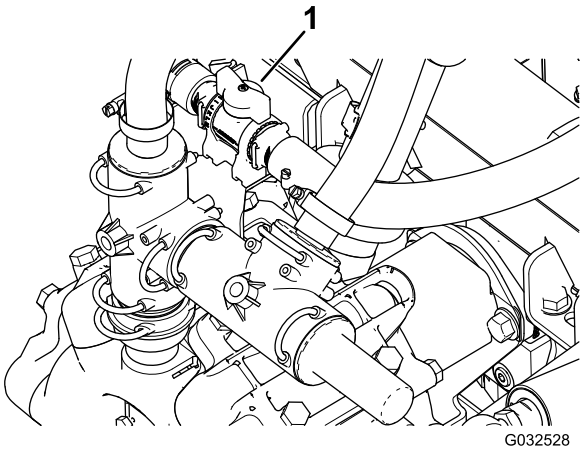

Figure 127

1. Agitation-throttle-valve handle

Boom-Section Valves

The section valves control flow to the 3 boom sections and they can be turned on or off (Figure 128).

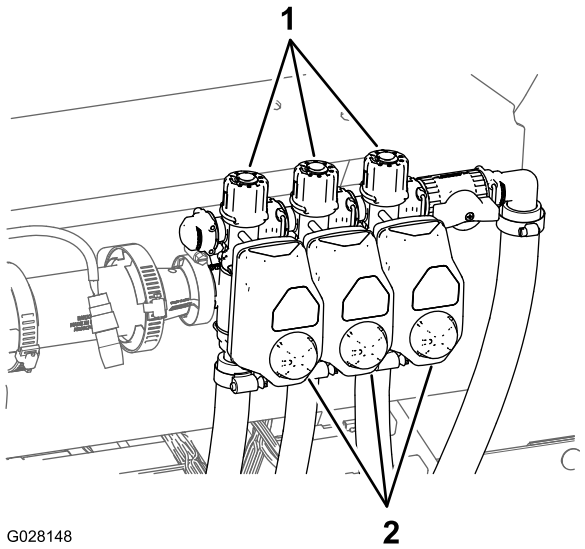

Figure 128

1. Knob (section-bypass valve)
2. Actuators (section valve)

Boom-Section-Bypass Valve

Manual Mode Only

The boom bypass redirects the fluid flow for a boom section to the tank when you turn off the boom section. You can adjust the boom bypass to ensure that the boom pressure remains constant no matter how many booms sections are on.

Operation

Setting the Boom-Section-Bypass Valves

Manual Mode Only

Important: When operating in Auto mode, the boom-sections-bypass shutoff valve must be closed.

Before using the sprayer for the first time, if you change the nozzles, or as needed, calibrate the sprayer flow, speed, and set the boom-section bypass (if operating in Manual mode); refer to the calibration procedure in the *Operator's Manual*.

Note: The section valves must be calibrated each time the nozzles are changed (only if operating/spraying in Manual mode).

Select an open flat area to perform this procedure.

1. Fill the spray tank halfway with clean water.
2. Lower the sprayer booms.
3. Set the parking brake.
4. Set the spray control switch to manual.
5. Set the 3 boom switches to the ON position, but leave the master-boom switch off.
6. Set the pump switch to the ON position, and turn on the agitation.
7. Increase the machine to full throttle.
8. Using the application-rate switch, adjust the application rate (pressure) to 2.75 bar (40 psi).
9. Turn off the left boom and adjust the boom-bypass knob (Figure 129) until the pressure is at the previous level.

   Note: The numbered indicators on the bypass knob and needle are for reference only.

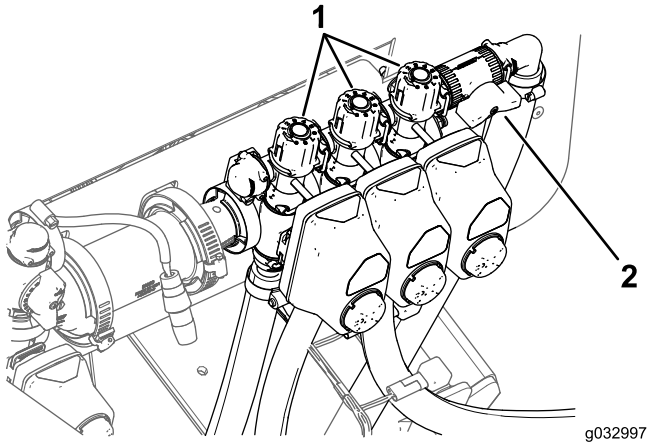

Figure 129

1. Boom-section-bypass adjustment knobs
2. Boom-sections-bypass-shutoff valve

10. Turn on the left boom and turn off the right boom.

11. Adjust the right boom-bypass knob (Figure 129) until the pressure is at the previous level.
12. Turn on the right boom and turn off the center boom.
13. Adjust the center boom-bypass knob (Figure 129) until the pressure is at the previous level.
14. Turn all the booms off.
15. Turn the pump off.

Positioning the Agitation-Bypass-Valve Knob

- The agitation bypass valve is in the full OPEN position as shown in Figure 130.
- The agitation bypass valve is in the CLOSE (0) position as shown in Figure 130.
- The agitation bypass valve is in an INTERMEDIATE (adjusted relative to the pressure gauge for the sprayer system) position as shown in Figure 130.

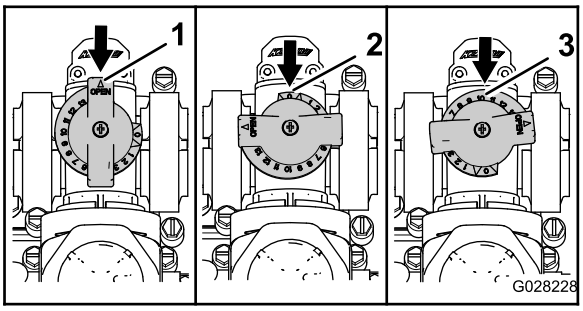

Figure 130

1. Open
2. Closed (0)
3. Intermediate position

Calibrating the Agitation Bypass Valve

Service Interval: Yearly—Calibrate the agitation bypass valve.

Important: If you have the base Spray System installed turn the power switch to the OFF position.

1. Select an open, flat area to perform this procedure.
2. Fill the spray tank halfway with clean water.
3. Verify the agitation control valve is open.

   Note: If it has been adjusted open it completely at this time.
4. Set the parking brake and start the engine.
5. Set the pump switch and the agitation switch to the ON position.
6. Move the throttle lever to the FAST position.
7. Turn the master boom switch to the OFF position.
8. Use the application-rate switch to adjust the sprayer-system pressure to 689 kPa (100 psi).
9. Turn the agitation switch to the OFF position and read the pressure gauge.
   - If the pressure gauge indicates 689 kPa (100 psi), the agitation bypass valve is properly calibrated.
   - If the pressure gauge indicates differently, continue to the next step.
10. Adjust the agitation bypass valve (Figure 131) on the backside of the agitation valve until the sprayer-system pressure indicated on the gauge indicates 689 kPa (100 psi).

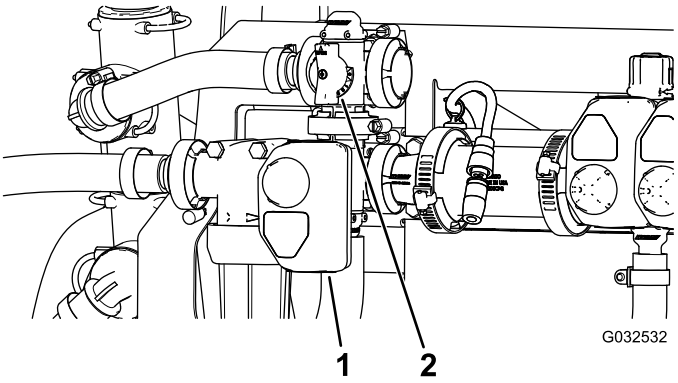

Figure 131

1. Actuator (agitation valve)
2. Agitation bypass valve

11. Turn the pump switch to the OFF position.
12. Move the throttle lever to the IDLE position and turn the key switch to the OFF position.

Maintenance

Changing the Pressure Filter Screen

Service Interval: Every 400 hours—Change the pressure filter screen.

Note: Optional pressure filter screens are available through your authorized Toro parts distributor.

1. Move the machine to a level surface, shut off the sprayer pump, shut off the engine, and remove the key from the starter switch.
2. Align a drain pan under the pressure filter (Figure 132).

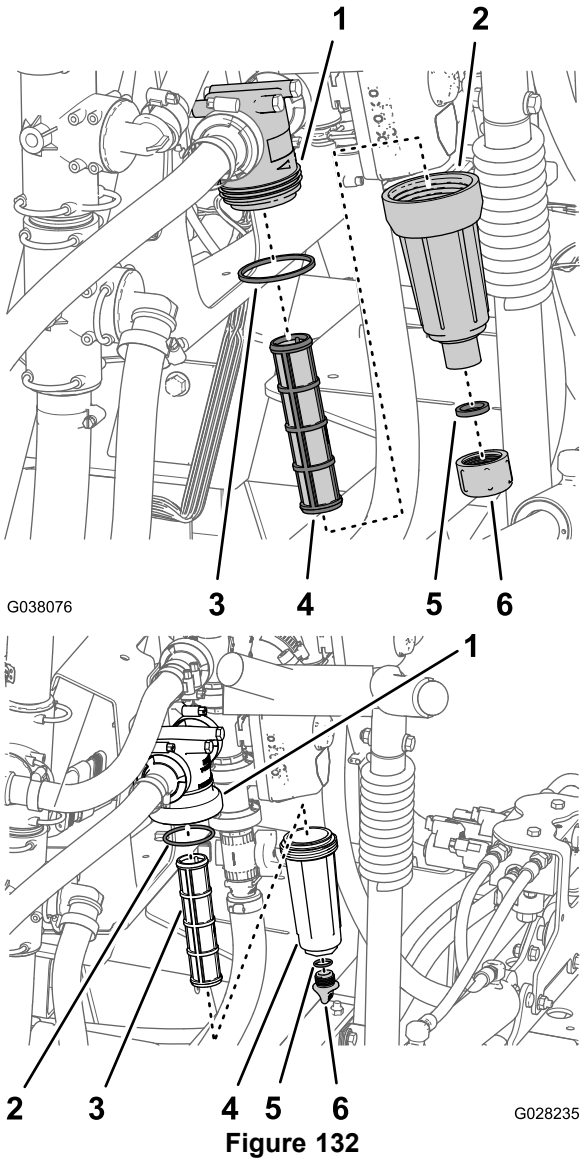

Figure 132

1. Filter head
2. O-ring (bowl)
3. Filter element
4. Bowl
5. O-ring (drain cap)
6. Drain cap

3. Rotate the drain cap counterclockwise and remove it from the bowl of the pressure filter (Figure 132).

Note: Allow the bowl to drain completely.

4. Rotate the bowl counterclockwise and remove it from its filter head (Figure 132).
5. Remove the old pressure-filter element (Figure 132).

Note: Discard the old filter.

6. Check the O-ring for the drain cap (located at the threaded fitting of the bowl) and the O-ring for the bowl for damage and wear (Figure 132).

Note: Replace any damaged or worn O-rings for the plug, bowl, or both.

7. Install the new pressure-filter element into the filter head (Figure 132).

Note: Ensure that the filter element is firmly seated into the filter head.

8. Install the bowl onto the filter head and tighten by hand (Figure 132).
9. Install the cap onto the bowl and tighten by hand (Figure 132).

Cleaning the Agitation and Section Valves

- To clean the agitation valve refer to the following sections:
  1. Removing the Valve Actuator (page 56)
  2. Removing the Agitation-Manifold Valve (page 57)
  3. Cleaning the Manifold Valve (page 59)
  4. Assembling the Manifold Valve (page 60)
  5. Installing the Agitation-Manifold Valve (page 61)
  6. Installing the Valve Actuator (page 62)
- To clean the 3 section valves refer to the following sections:
  1. Installing the Valve Actuator (page 62)
  2. Removing the Section Valve Manifold (page 58)
  3. Cleaning the Manifold Valve (page 59)
  4. Assembling the Manifold Valve (page 60)
  5. Installing the Section-Manifold Valve (page 61)
  6. Installing the Valve Actuator (page 62)

Removing the Valve Actuator

1. Position the sprayer on a level surface, set the parking brake, stop the pump, shut off the engine, and remove the key.
2. Remove the 3-pin connector of the valve actuator from the 3 socket electrical connector of the sprayer harness.
3. Remove the retainer that secures the a actuator to the manifold valve for the rate control, agitation, master boom, or boom-section valve (Figure 133).

Note: Squeeze the 2 legs of the retainer together while pushing it down.

Note: Retain the actuator and retainer for installation in Installing the Valve Actuator (page 62).

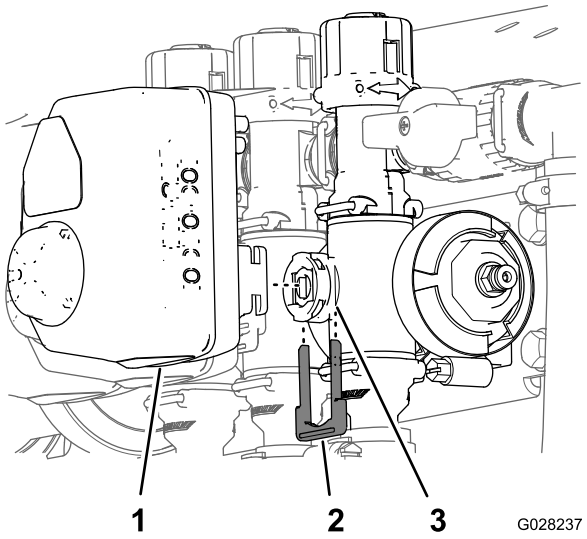

Figure 133

Section-Valve Actuator Shown (the agitation-valve actuator is similar)

1. Valve actuator (section valve shown)
2. Retainer
3. Stem port

4. Remove the actuator from the manifold valve.

Removing the Agitation-Manifold Valve

1. Remove the clamps and gaskets that secure the manifold for the agitation valve to the agitation bypass valve, pressure-filter head, reducer coupling, and adapter fitting (agitation throttle valve) as shown in Figure 134.

Note: Retain the clamps, gaskets, quick connect, and quick-connect pin for installation in Installing the Agitation-Manifold Valve (page 61).

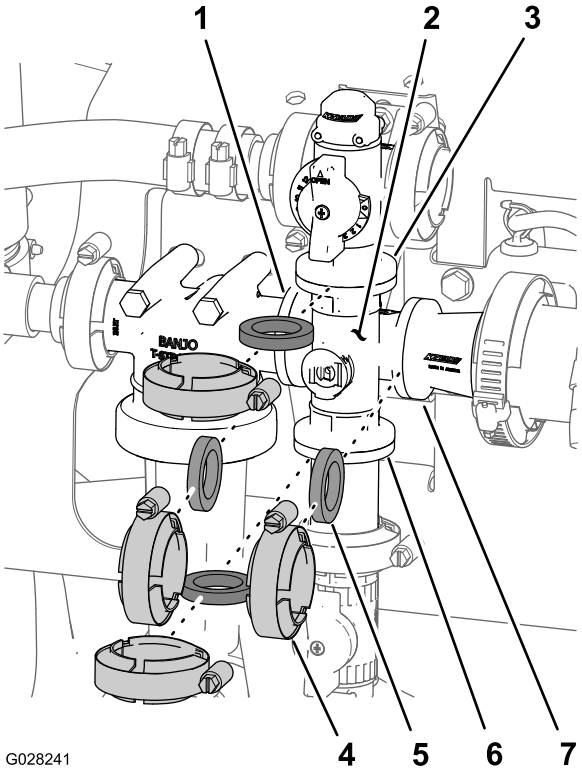

Figure 134

Agitation Valve

1. Flange (pressure-filter head)
2. Manifold (agitation valve)
3. Flange (agitation bypass valve)
4. Flange clamp
5. Gasket
6. Flange (adapter fitting—agitation throttle valve)
7. Flange (reducer coupling)

2. Remove the agitation-valve manifold from the machine (Figure 135).

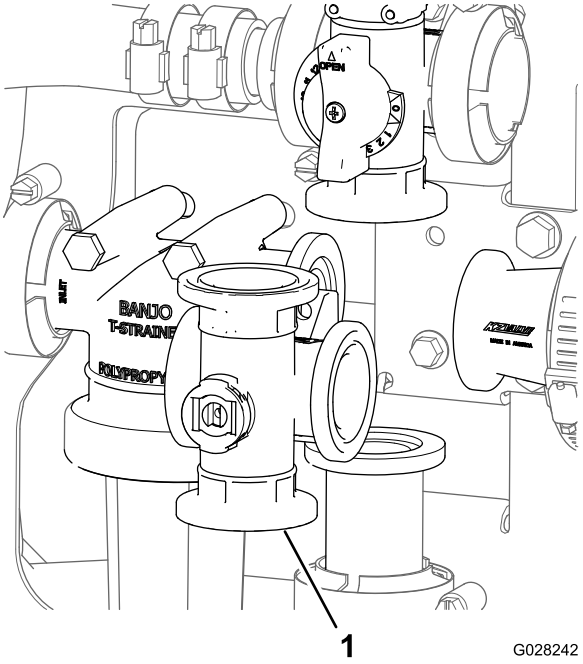

Figure 135

1. Agitation-valve manifold

Removing the Section Valve Manifold

1. Remove clamps and gaskets that secure the manifold for the section valve (Figure 136) to the adjacent section valve (if left, section valve and reducer coupling).

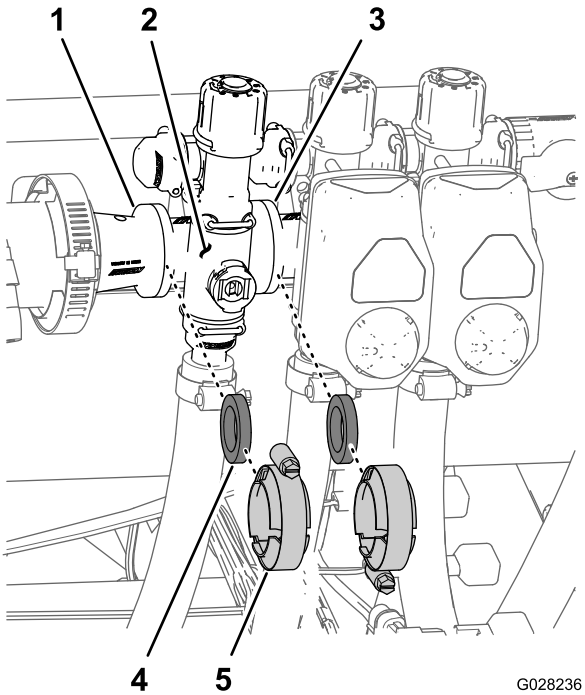

Figure 136

1. Flange (reducer coupling)
2. Manifold (section valve)
3. Flange (adjacent section valve)
4. Gasket
5. Flange clamp

2. Remove the retainer that secures the section valve manifold to the bypass fitting (Figure 137).

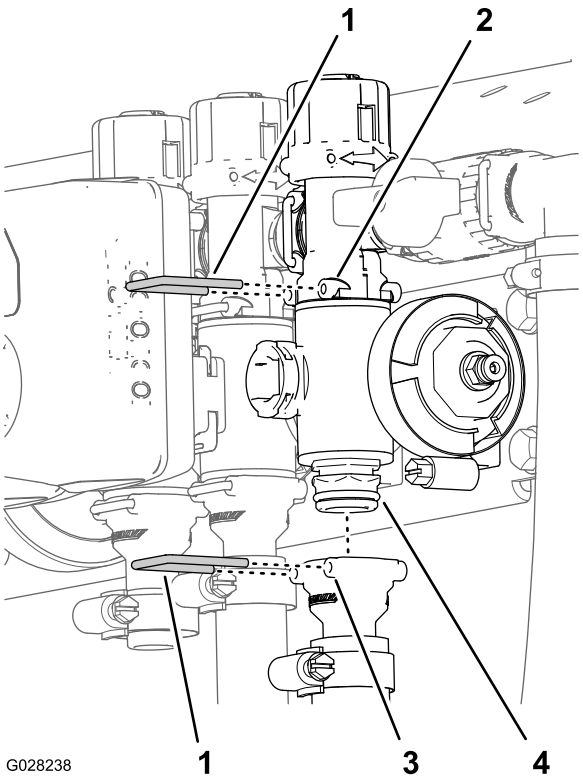

Figure 137

1. Retainer
2. Socket (bypass fitting)
3. Manifold-valve assembly
4. Socket (outlet fitting)

3. Remove the section valve manifold from the machine (Figure 138).

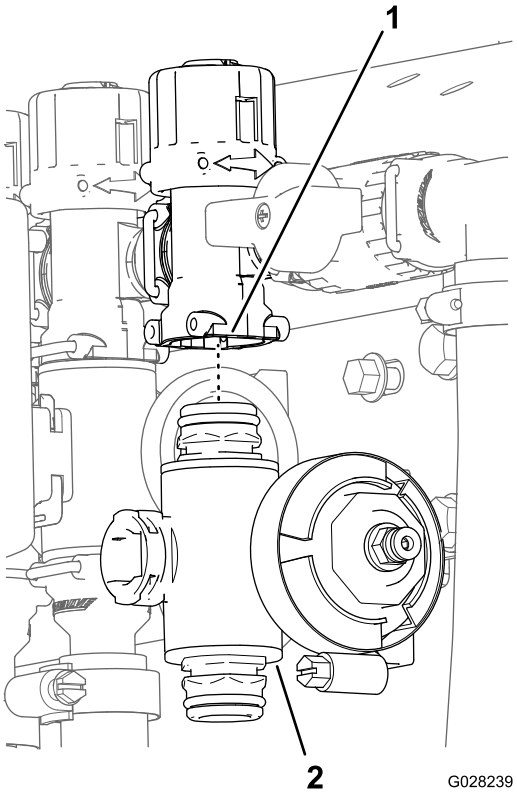

Figure 138

1. Bypass fitting
2. Section valve manifold

Cleaning the Manifold Valve

1. Position the valve stem so that it is in the closed position (Figure 139).

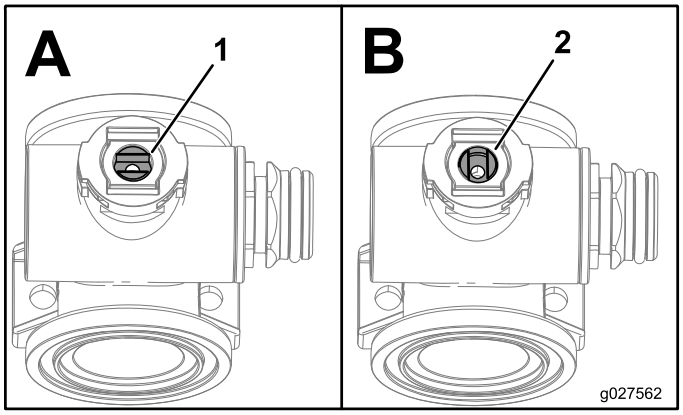

Figure 139

1. Valve open
2. Valve closed

2. Remove the 2 end-cap-fitting assemblies from each end of the manifold body (Figure 140 and Figure 141).

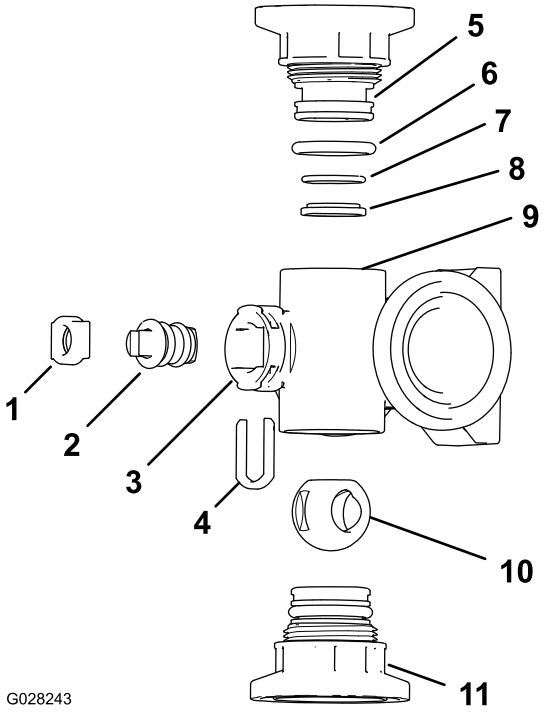

Figure 140

Agitation Valve Manifold

1. Stem retainer
2. Valve stem
3. Stem port
4. Stem retainer
5. End-cap fitting
6. End-cap-seal O-ring (0.796 inch / 0.139 inch)
7. Back seating O-ring (0.676 inch / 0.07 inch)
8. Valve-seat ring
9. Manifold body
10. Ball valve
11. Quick connect

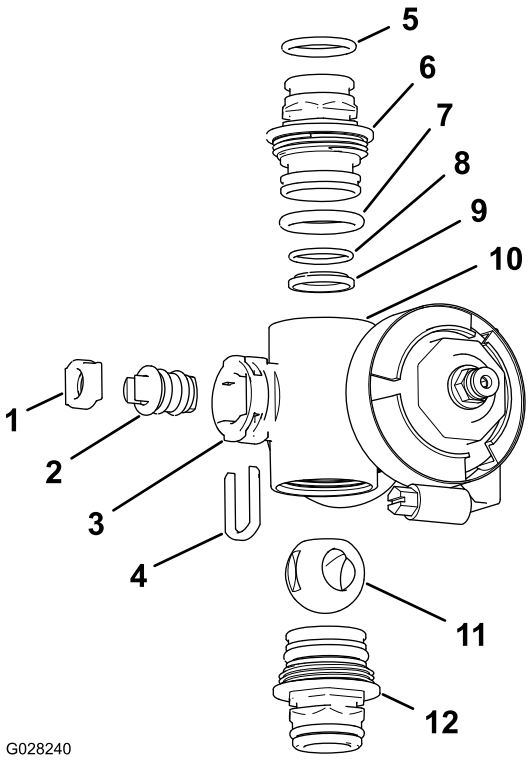

Figure 141
Section Valve Manifold

1.	Valve-stem seat	7.	End cap O-ring (0.796 inch / 0.139 inch)
2.	Valve-stem assembly	8.	Back seating O-ring (0.676 inch / 0.07 inch)
3.	Stem port	9.	Ball seat
4.	Stem retainer	10.	Manifold body
5.	Outlet fitting O-ring (0.737 inch / 0.103 inch)	11.	Ball valve
6.	End-cap fitting	12.	End-cap-fitting assembly

3. Turn the valve stem so that the ball is in the OPEN position (Figure 139).

   Note: The valve stem should be parallel with the valve flow and the ball should slide out.

4. Remove the stem retainer from the slots in the stem port in the manifold (Figure 140 and Figure 141).
5. Remove the stem retainer and valve-stem seat from the manifold (Figure 140 and Figure 141).
6. Reach into the manifold body and remove the valve-stem assembly (Figure 140 and Figure 141).
7. Clean the inside of the manifold and exterior of the ball valve, valve-stem assembly, stem capture, and end fittings.

Assembling the Manifold Valve

1. Check the condition of the outlet fitting O-rings (section valve manifold only), end cap O-rings, back seating O-rings, and ball seat for damage or wear (Figure 140 and Figure 141).

   Note: Replace any damaged or worn O-rings or seats.

2. Apply grease to the valve stem and insert it into the valve-stem seat (Figure 140 and Figure 141).
3. Install the valve stem and seat into the manifold and secure the stem and seat with the stem retainer (Figure 140 and Figure 141).
4. Ensure that the back seating O-ring and the ball seat are aligned and seated into the end-cap fitting (Figure 140 and Figure 141).
5. Install the end-cap-fitting assembly onto the manifold body until the flange of the end-cap fitting touches the manifold body (Figure 140 and Figure 141), then turn the end-cap fitting an additional 1/8 to 1/4 turn.

   Note: Use caution to prevent damage to the end of the fitting.

6. Insert the ball into the valve body (Figure 142).

   Note: The valve stem should fit inside the ball-drive slot. If the valve stem does not fit, adjust the position of the ball (Figure 142).

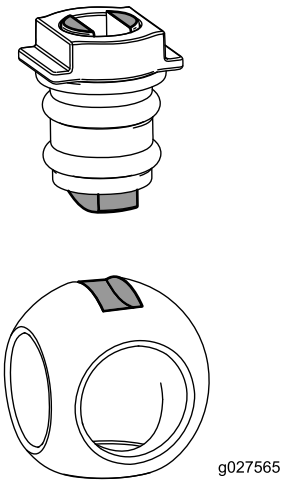

Figure 142

7. Turn the valve-stem assembly so that the valve is closed (Figure 139).
8. Repeat steps 4 and 5 for the other end-cap-fitting assembly.

Installing the Agitation-Manifold Valve

1. Align the flange of the agitation bypass valve, 1 gasket, and the end-cap-fitting flange of the agitation-valve manifold (Figure 143).

   Note: If needed, loosen the mounting hardware for the pressure-filter head as needed to provide clearance.

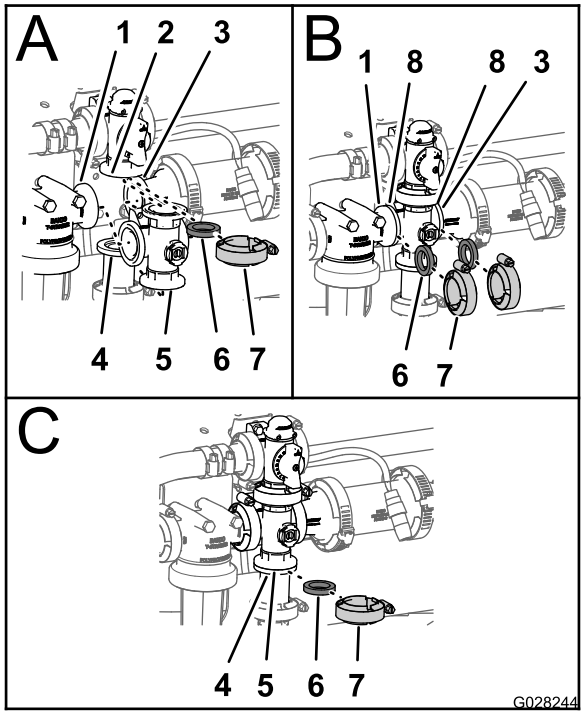

Figure 143

1. Flange (pressure-filter head)
2. Flange (agitation bypass valve)
3. Flange (reducer coupling)
4. Flange clamp
5. Gasket
6. Quick connect
7. Manifold (agitation valve)
8. Flange (manifold—agitation valve)

2. Assemble the agitation bypass valve, gasket, and agitation-valve manifold with a clamp, and tighten by hand (Figure 143).
3. Align a gasket between the flanges of the pressure-filter head and the agitation-valve manifold (Figure 143).
4. Assemble the pressure-filter head, gasket, and agitation-valve manifold with a clamp, and tighten by hand (Figure 143).
5. Align a gasket between the flanges of the agitation-valve manifold and the reducer coupling (Figure 143).
6. Assemble the agitation-valve manifold, gasket, and reducer coupling with a clamp, and tighten by hand (Figure 143).
7. Align a gasket between the flanges of the agitation-valve manifold and the adapter fitting for the agitation throttle valve (Figure 143).
8. Assemble the agitation-valve manifold, gasket, and adapter fitting with a clamp, and tighten by hand (Figure 143).
9. If you loosened the mounting hardware for the pressure-filter head, tighten the nut and bolt to 1978 to 2542 N·cm (175 to 225 in-lb).

Installing the Section-Manifold Valve

1. Insert the upper end-cap fitting of the manifold valve into the bypass fitting (Figure 144).

   Note: If needed, loosen the mounting hardware for the bypass valve as needed to provide clearance.

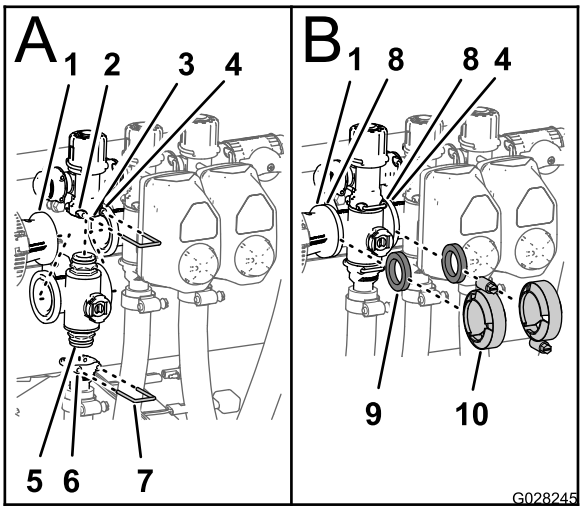

Figure 144

1. Flange (reducer coupling)
2. Socket (bypass fitting)
3. Bypass valve
4. Flange (adjacent manifold—agitation valve)
5. End-cap fitting (manifold-valve assembly)
6. Socket (outlet fitting)
7. Retainer
8. Flange (manifold—section valve)
9. Gasket
10. Flange clamp

2. Secure the end-cap fitting to the bypass fitting by inserting a retainer into the socket of the bypass fitting (Figure 144).
3. Assemble the outlet fitting onto the lower end-cap fitting of the manifold valve (Figure 144).
4. Secure the end-cap fitting to the outlet fitting by inserting a retainer into the socket of the outlet fitting (Figure 144)
5. Align a gasket between the flanges of the reducer coupling and the section valve manifold (Figure 144).
6. Assemble the reducer coupling, gasket, and section valve manifold with a clamp, and tighten by hand (Figure 144).
7. If installing the 2 left most section valves, align a gasket between the flanges of the 2 adjacent section valve manifolds (Figure 144).

8. Assemble the and 2 adjacent section valve manifolds and gasket with a clamp, and tighten by hand (Figure 144).
9. If you loosened the mounting hardware for the bypass valve, tighten the nut and bolt to 1017 to 1243 N·cm (90 to 110 in-lb).

Installing the Valve Actuator

1. Align the actuator to the manifold valve.
2. Secure the actuator and valve with the retainer that you removed in step 3 of Removing the Valve Actuator (page 56).

Storage

Perform the following maintenance steps for short-term or long-term storage:

- **For short-term storage** (less than 30 days), clean the sprayer system; refer to your *Operator's Manual*.
- **For long-term storage** (longer then 30 days), clean the agitation valve and the 3 section valves; refer to Cleaning the Agitation and Section Valves (page 56).

Troubleshooting

Troubleshooting the Spray System

Problem	Possible Cause	Corrective Action
A boom section does not spray.	1. The electrical connection on the boom valve is dirty or disconnected. 2. The fuse is open (blown). 3. A hose is pinched. 4. A boom-bypass valve is improperly adjusted. 5. The boom-section valve is damaged. 6. The electrical system is damaged.	1. Turn the valve off manually. Disconnect the electrical connector on the valve and clean all leads, then connect it. 2. Check the fuses and replace them as necessary. 3. Repair or replace the hose. 4. Adjust the boom-bypass valves. 5. Contact your Authorized Service Dealer. 6. Contact your Authorized Service Dealer.
A boom section does not turn off.	1. The valve is damaged.	1. Disassemble the boom-section valve; refer to the Cleaning section. Inspect all of the parts and replace any that are damaged.
A boom valve is leaking.	1. An O-ring is deteriorated.	1. Disassemble the valve and replace the seals using the Valve Repair Kit; contact your Authorized Service Dealer.
The pressure drops when you turn on a boom.	1. The boom-bypass valve is improperly adjusted. 2. There is an obstruction in the boom-valve body. 3. A nozzle filter is damaged or clogged.	1. Adjust the boom-bypass valve. 2. Remove the inlet and outlet connections to the boom valve and remove any obstructions. 3. Remove and inspect all nozzles.
A boom actuator is not operating properly.	1. A thermal breaker in the fuse block that is responsible for powering the actuator has been tripped due to overheating. 2. A thermal breaker in the boom actuator that is responsible for powering the actuator has been tripped or malfunctioned.	1. Wait for the system to cool down before resuming operation. If the thermal breakers trip repeatedly, contact your Authorized Service Dealer. 2. Contact your Authorized Service Dealer.

Schematics

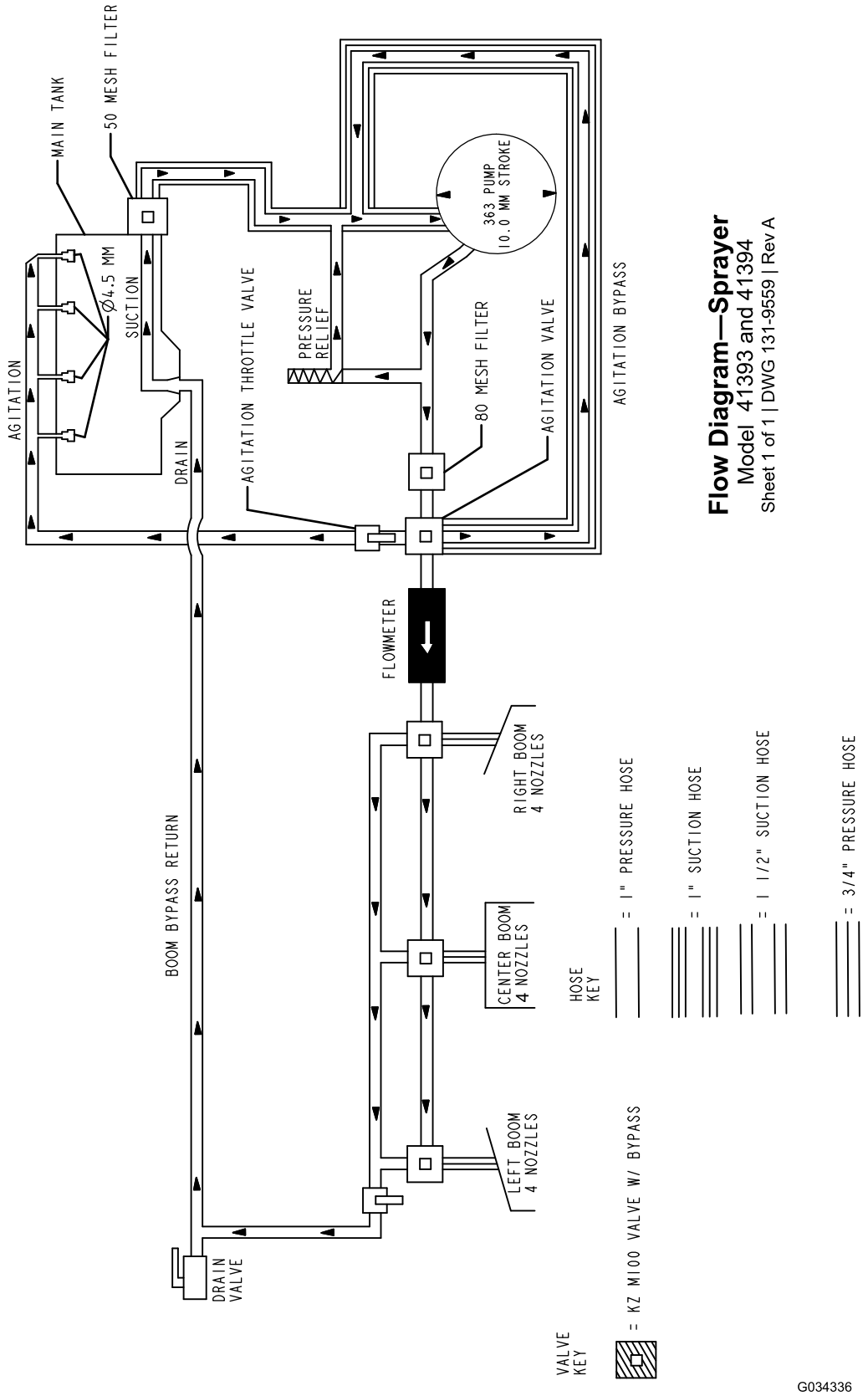

Sprayer Flow Diagram 131-9559 (Rev. A)