Form No. 3407-113 Rev A

SnowMax 724 and 824 QXE Snowthrower

Model No. 38711—Serial No. 400010798 and Up

Model No. 38712—Serial No. 400010798 and Up

Operator's Manual

This product complies with all relevant European directives. For details, see the separate product specific Declaration of Conformity (DOC) sheet.

Introduction

This machine is intended to be used by residential homeowners. It is designed for removing snow from paved surfaces, such as driveways and sidewalks, and other surfaces for traffic on residential or commercial properties. It is not designed for removing materials other than snow, nor is it designed for clearing off gravel surfaces.

Read this information carefully to learn how to operate and maintain your machine properly and to avoid injury and machine damage. You are responsible for operating the machine properly and safely.

You may contact Toro directly at www.Toro.com for machine and accessory information, help finding a dealer, or to register your machine.

Whenever you need service, genuine Toro parts, or additional information, contact an Authorized Service Dealer or Toro Customer Service and have the model and serial numbers of your machine ready. Figure 1 identifies the location of the model and serial numbers on the machine. Write the numbers in the space provided.

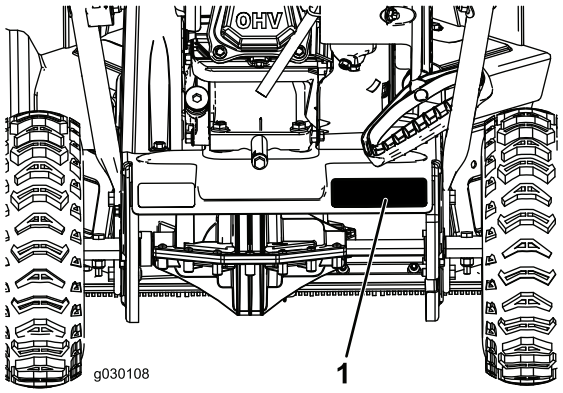

Figure 1

1. Model and serial number location

Model No. _____

Serial No. _____

This manual identifies potential hazards and has safety messages identified by the safety-alert symbol (Figure 2), which signals a hazard that may cause serious injury or death if you do not follow the recommended precautions.



Figure 2

1. Safety-alert symbol

This manual uses 2 words to highlight information. **Important** calls attention to special mechanical information and **Note** emphasizes general information worthy of special attention.

For models with stated power, the net power of the engine was laboratory rated by the engine manufacturer in accordance with SAE J1940. As configured to meet safety, emission, and operating requirements, the actual engine horsepower on this class of snow thrower will be significantly lower.

© 2016—The Toro® Company
8111 Lyndale Avenue South
Bloomington, MN 55420

Register at www.Toro.com.

Original Instructions (EN)
Printed in the USA
All Rights Reserved
3407-113 A

Important: **If you are using this machine above 1500 m (5,000 ft) for a continuous period, ensure that the High Altitude Kit has been installed so that the engine meets CARB/EPA emission regulations. The High Altitude Kit increases engine performance while preventing spark-plug fouling, hard starting, and increased emissions. Once you have installed the kit, attach the high-altitude label next to the serial decal on the machine. Contact any Authorized Toro Service Dealer to obtain the proper High Altitude Kit and high-altitude label for your machine. To locate a dealer convenient to you, access our website at www.Toro.com or contact our Toro Customer Care Department at the number(s) listed in your Emission Control Warranty Statement. Remove the kit from the engine and restore the engine to its original factory configuration when running the engine under 1500 m (5,000 ft). Do not operate an engine that has been converted for high-altitude use at lower altitudes; otherwise, you could overheat and damage the engine. If you are unsure whether or not your machine has been converted for high-altitude use, look for the following label (Figure 3).**

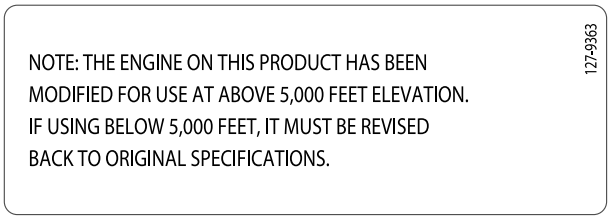

Figure 3

This spark ignition system complies with Canadian ICES-002.

Contents

Introduction 1
Safety 3
Safety and Instructional Decals 3
Setup 5
1 Unfolding the Handle 5
2 Installing the Discharge Chute 6
3 Filling the Engine with Oil 6
Product Overview 8
Operation 8
Before Operation 8
Safety 8
Filling the Fuel Tank 8
Checking the Engine-Oil Level 9
During Operation 9
Safety 9
Starting the Engine 9
Engaging the Auger 11
Disengaging the Auger 11
Self-Propelling the Machine 11
Shutting Off the Engine 11
Operating the Quick Stick® 11
Clearing a Clogged Discharge Chute 12
Operating Tips 12
After Operation 12
Safety 12
Preventing Freeze-up after Use 12
Maintenance 13
Recommended Maintenance Schedule(s) 13
Maintenance Safety 13
Checking the Engine-Oil Level 13
Checking and Adjusting the Skids 14
Inspecting the Throwing Edges 14
Changing the Engine Oil 14
Replacing the Spark Plug 16
Adjusting the Auger Cable 16
Adjusting the Transmission Cable 16
Checking the Tire Pressure 17
Storage 18
Storing the Snowthrower 18

Safety

This machine is designed in consideration of the standards in effect at the time of production.

- Read and understand the contents of this *Operator's Manual* before you start the engine. Ensure that everyone using this product knows how to use the product and understands the warnings.
- Do not put your hands or feet near moving components on the machine.
- Do not operate machine without all guards and other safety protective devices in place and working on the machine.
- Keep clear of any discharge opening. Keep bystanders a safe distance away from the machine.
- Keep children out of the operating area. Never allow children to operate the machine.
- Shut off the engine before unclogging, servicing, or fueling the machine.

You can find additional items of safety information in their respective sections throughout this manual.

Safety and Instructional Decals

Safety and instruction decals are located near areas of potential danger. Replace damaged or missing decals.

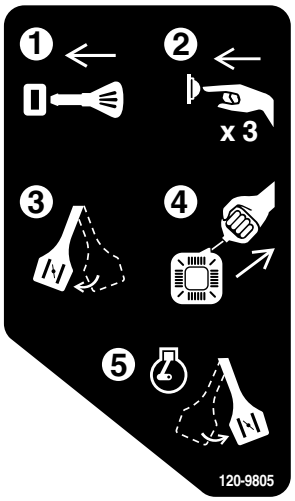

120-9805

1. Insert the key.
2. Prime the engine 3 times.
3. Engage the choke.
4. Pull the starter cord.
5. Once the engine is running, disengage the choke.

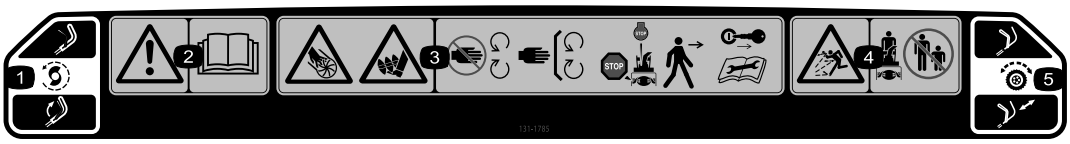

131-1785

Order Part No. 131-5921

1. Auger drive—squeeze the lever to engage; release the lever to disengage.
2. Warning—read the *Operator's Manual*.
3. Cutting/dismemberment hazard of hand or foot, auger—keep away from moving parts; keep all guards and shields in place; shut off the engine and wait for the auger to stop before leaving the machine; remove the ignition key and read the instructions before servicing or performing maintenance.
4. Thrown object hazard—keep bystanders a safe distance away from the snowthrower.
5. Self-propel drive—push down on the handle to engage the self-propel drive.



131-5914

Order Part No. 131-5915

1. Cutting/dismemberment hazard of hand or foot, auger—do not place your hand in the chute; remove the ignition key and read the instructions before servicing or performing maintenance.

Setup

Loose Parts

Use the chart below to verify that all parts have been shipped.

Procedure	Description	Qty.	Use
1	No parts required	–	Unfold the handle.
2	Bolt (1/4–20 X 1–1/2 inches) Locknut (1/4–20 inch) Carriage bolt (1/4–20 x 1 inch) Locknut (1/4–20 inch) Screw (1/4–20 X 5/8 inch)	1 1 3 3 1	Install the discharge chute.
3	No parts required	–	Fill the engine with oil.

1

Unfolding the Handle

No Parts Required

Procedure

Important: **Ensure that the cables are not pinched when unfolding the handle.**

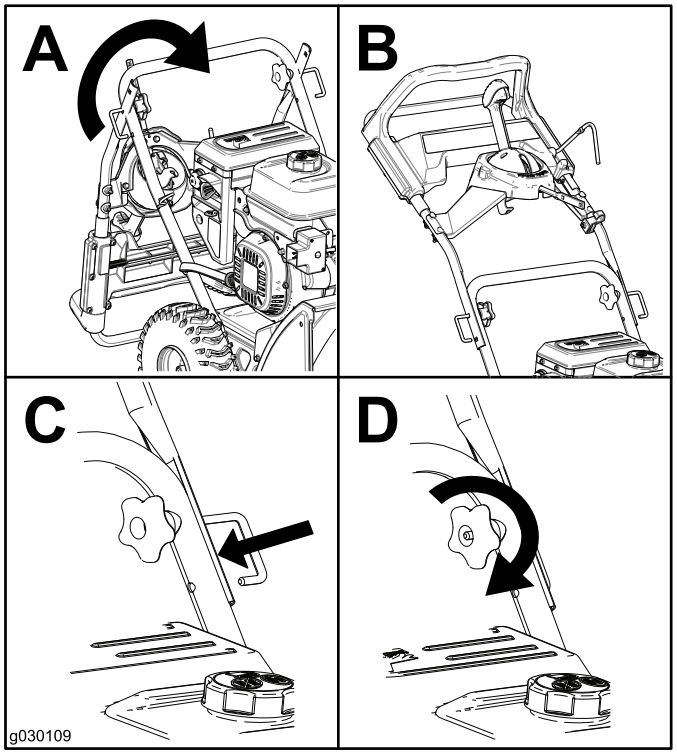

Figure 4

2

Installing the Discharge Chute

Parts needed for this procedure:

1	Bolt (1/4–20 X 1–1/2 inches)
1	Locknut (1/4–20 inch)
3	Carriage bolt (1/4–20 x 1 inch)
3	Locknut (1/4–20 inch)
1	Screw (1/4–20 X 5/8 inch)

Procedure

1. Insert the chute post through the bracket into the base of the machine and secure it using a bolt and a locknut (Figure 5).

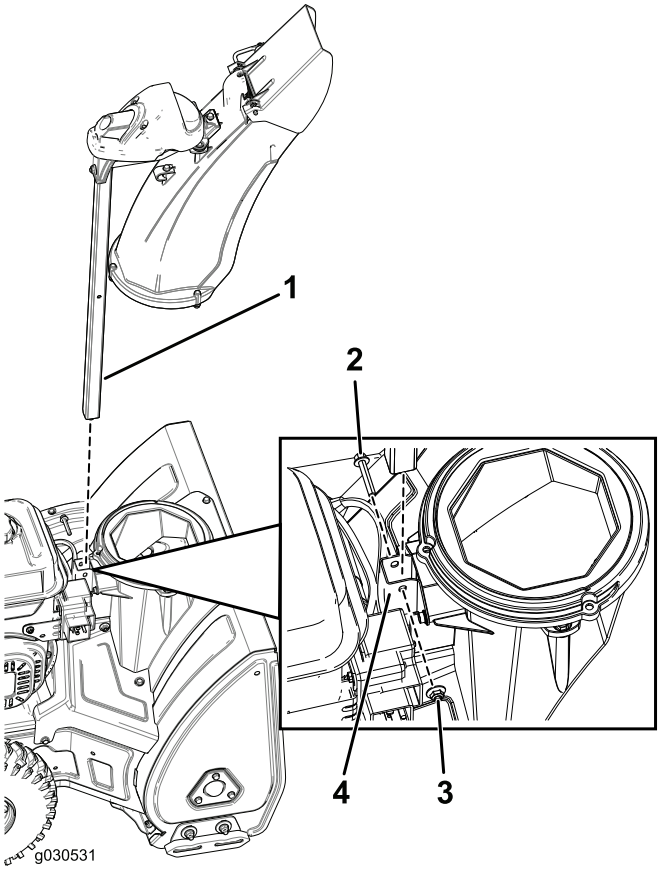

Figure 5

1. Chute post
2. Bolt (1/4–20 X 1–1/2 inches)
3. Locknut (1/4–20 inch)
4. Bracket

2. Assemble the chute rod and secure the cables (Figure 6).

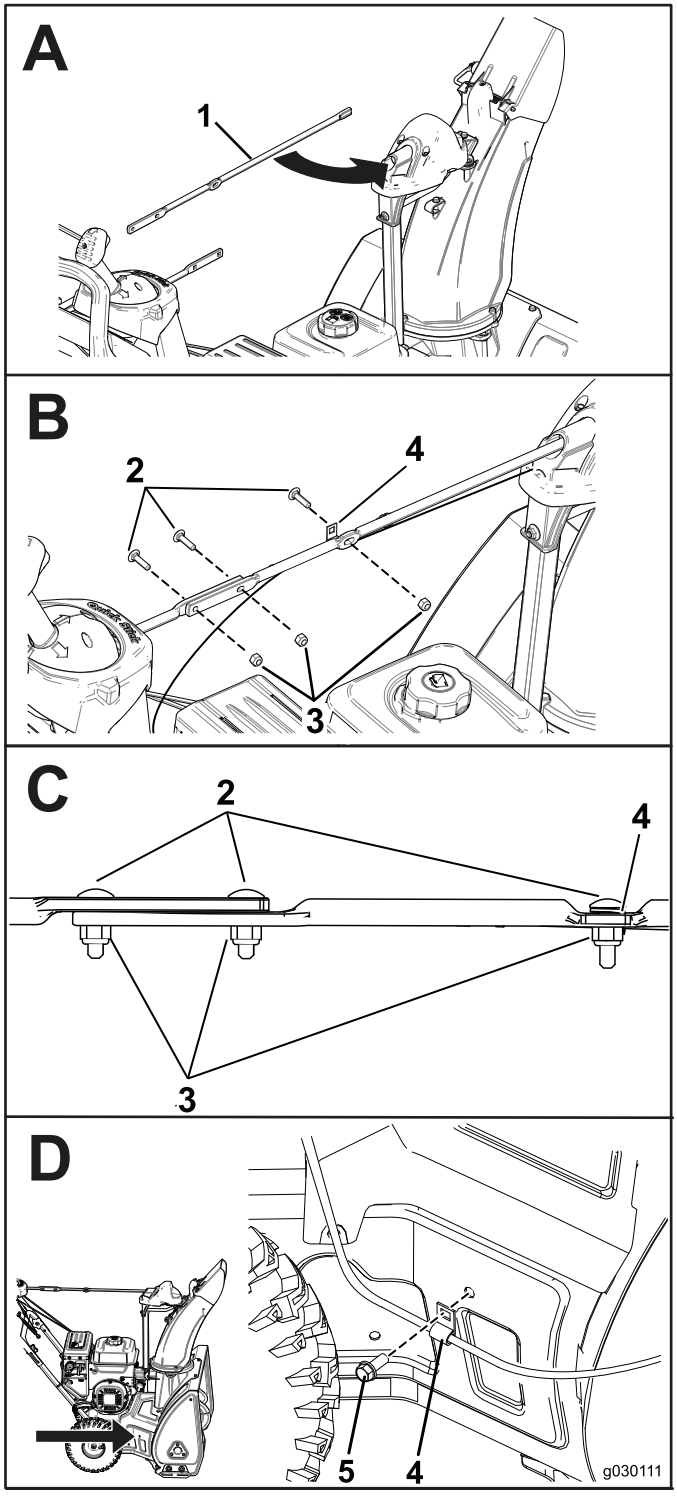

Figure 6

1. Chute rod
2. Carriage bolt (1/4–20 x 1 inch)
3. Locknut (1/4–20 inch)
4. Cable clip
5. Screw (1/4–20 X 5/8 inch)

3

Filling the Engine with Oil

No Parts Required

Procedure

Your machine comes with oil in the engine.

Model	Max fill
38711	0.5 L (16.9 oz)
38712	0.7 L (23.7 oz)

Oil type: automotive detergent oil with an API service classification of SJ, SL, or higher.

Use Figure 7 below to select the best oil viscosity for the outdoor temperature range expected:

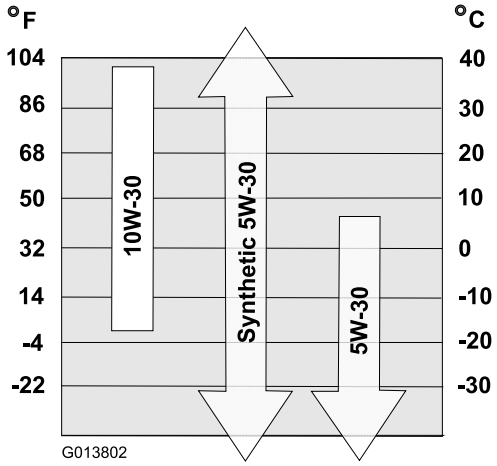

Figure 7

1. Move the machine to a level surface.
2. Clean around the oil-fill cap.
3. Check the oil level and add oil if necessary.

   Note: Do not tighten the dipstick when checking the oil level.

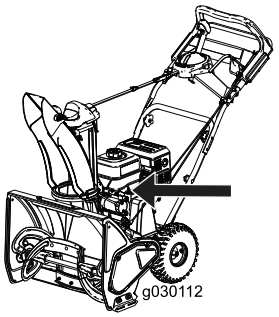

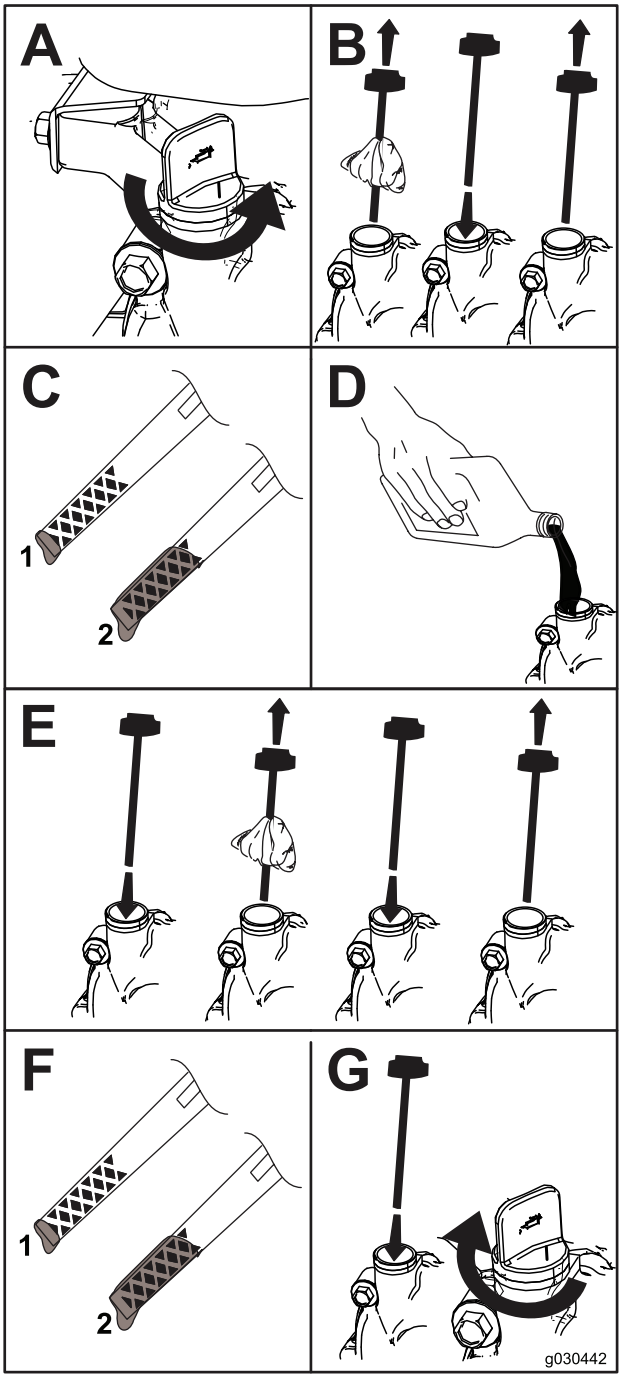

Figure 8

1. Low oil level—add oil
2. Correct oil level

Product Overview

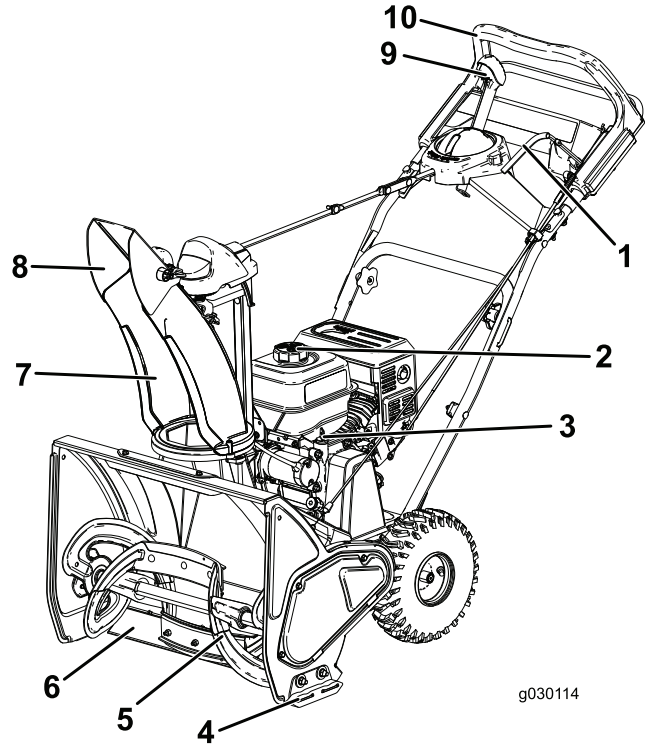

Figure 9

1. Auger lever
2. Fuel-tank cap
3. Dipstick
4. Skid
5. Auger
6. Scraper
7. Discharge chute
8. Chute deflector
9. Quick Stick® discharge-chute control
10. Upper handle

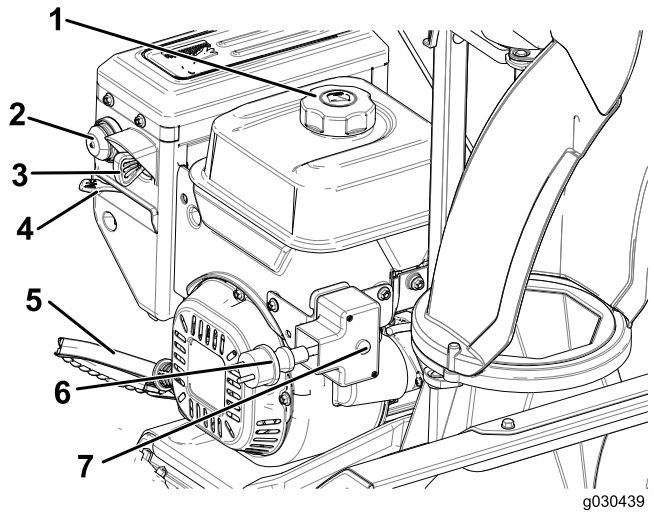

Figure 10

1. Fuel-tank cap
2. Primer
3. Ignition key
4. Choke
5. Recoil-start handle
6. Electric-start plug-in
7. Electric-start button

Operation

Before Operation

Safety

- Use extension cords and receptacles as specified by the manufacturer for all machines with electric-starting motors.
- Do not operate the machine without wearing adequate winter garments. Avoid loose fitting clothing that can get caught in moving parts. Wear slip resistant footwear that will improve footing on slippery surfaces.
- Always eye protection during operation or while performing an adjustment or repair to protect your eyes from foreign objects that the machine may throw.
- Thoroughly inspect the area where you will use the machine and remove all doormats, sleds, boards, wires, and other foreign objects.
- If a shield, safety device, or decal is damaged, illegible, or lost, repair or replace it before beginning operation. Also, tighten any loose fasteners.

Filling the Fuel Tank

Recommended Fuel:

- For best results, use only clean, fresh (less than 30 days old), unleaded gasoline with an octane rating of 87 or higher ((R+M)/2 rating method).
- **Ehtanol:** Gasoline with up to 10% ethanol (gasohol) or 15% MTBE (methyl tertiary butyl ether) by volume is acceptable. Ethanol and MTBE are not the same. Gasoline with 15% ethanol (E15) by volume is not approved for use. **Never** use gasoline that contains more than 10% ethanol by volume, such as E15 (contains 15% ethanol), E20 (contains 20% ethanol), or E85 (contains 85% ethanol). Using unapproved gasoline may cause performance problems and/or engine damage which may not be covered under warranty.
- **Do not** use gasoline containing methanol.
- **Do not** store fuel either in the fuel tank or fuel containers over the winter unless a fuel stabilizer is used.
- **Do not** add oil to gasoline.

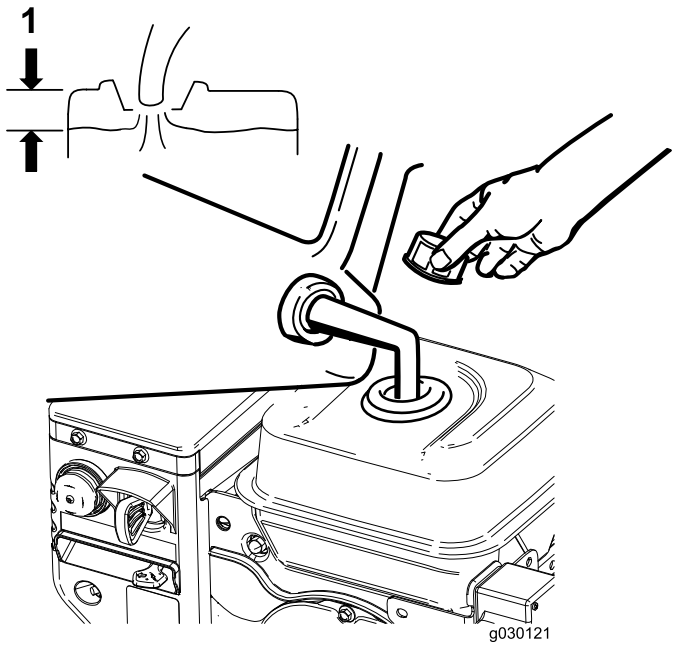

Figure 11

1. Do not fill above the bottom of the fuel tank neck.

Note: For best results, purchase only the quantity of gasoline that you expect to use in 30 days. Otherwise, you may add fuel stabilizer to newly purchased gasoline to keep it fresh for up to 6 months.

Checking the Engine-Oil Level

Refer to Checking the Engine-Oil Level (page 13).

During Operation

Safety

- **Rotating auger blades can injure fingers or hands.** Stay behind the handles and away from the discharge opening while operating the machine. **Keep your face, hands, feet, and any other part of your body or clothing away from moving or rotating parts.**
- Never direct the discharge toward people or areas where property damage can occur.
- Exercise caution to avoid slipping or falling. Always be sure of your footing, and keep a firm hold on the handles. Walk; never run.
- Exercise extreme caution when operating on slopes.
- Never operate the machine without good visibility or light.
- Look behind and use care when backing up with the machine.
- When not actively clearing snow, disengage power to the rotor blades.
- Use extension cords and receptacles as specified by the manufacturer for all machines with electric-starting motors.
- Do not attempt to clear snow from a gravel or crushed rock surface. This product is intended for use only on paved surfaces.
- Do not use the machine on a roof.
- Never attempt to make any adjustments while the engine is running (except when specifically recommended by manufacturer).
- Stay alert for hidden hazards or traffic.
- After striking a foreign object, shut off the engine, remove the ignition key, thoroughly inspect the machine for any damage, and repair the damage before starting and operating the machine.
- If the machine should start to vibrate abnormally, shut off the engine and check immediately for the cause.
- Do not run the engine indoors, except when starting the engine and for transporting the machine in or out of the building. Open the outside doors; exhaust fumes are dangerous.
- Do not overload the machine capacity by attempting to clear snow at too fast a rate.
- Never touch a hot engine or muffler.
- Thoroughly inspect the electrical cord before plugging it into a power source. If the cord is damaged, do not use it to start the machine. Replace the damaged cord immediately. Unplug the power cord whenever you are not starting the machine.

Starting the Engine

Note: Fully insert the key to start the engine. The middle position will not start the engine.

Using the Recoil Starter

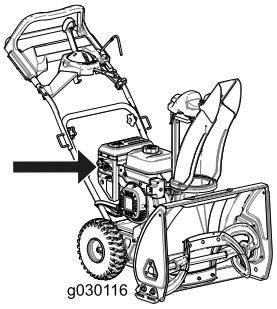

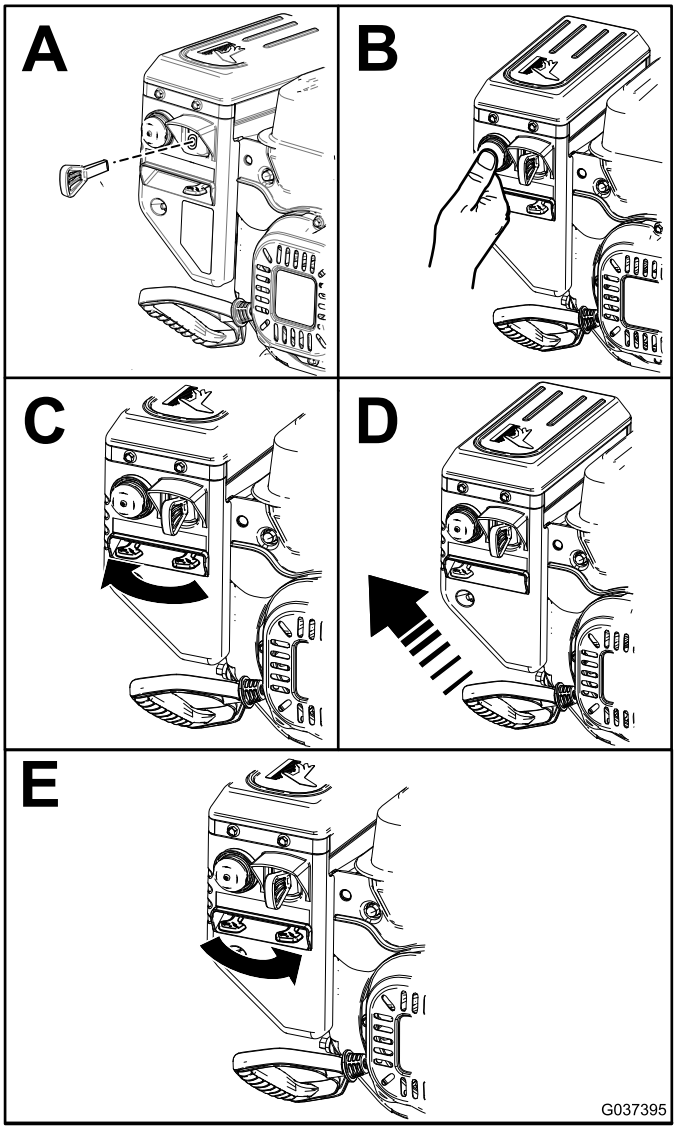

Figure 12

Note: Prime the engine in B of Figure 12 according to the prime table.

Using the Electric Starter

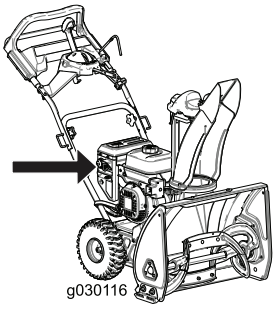

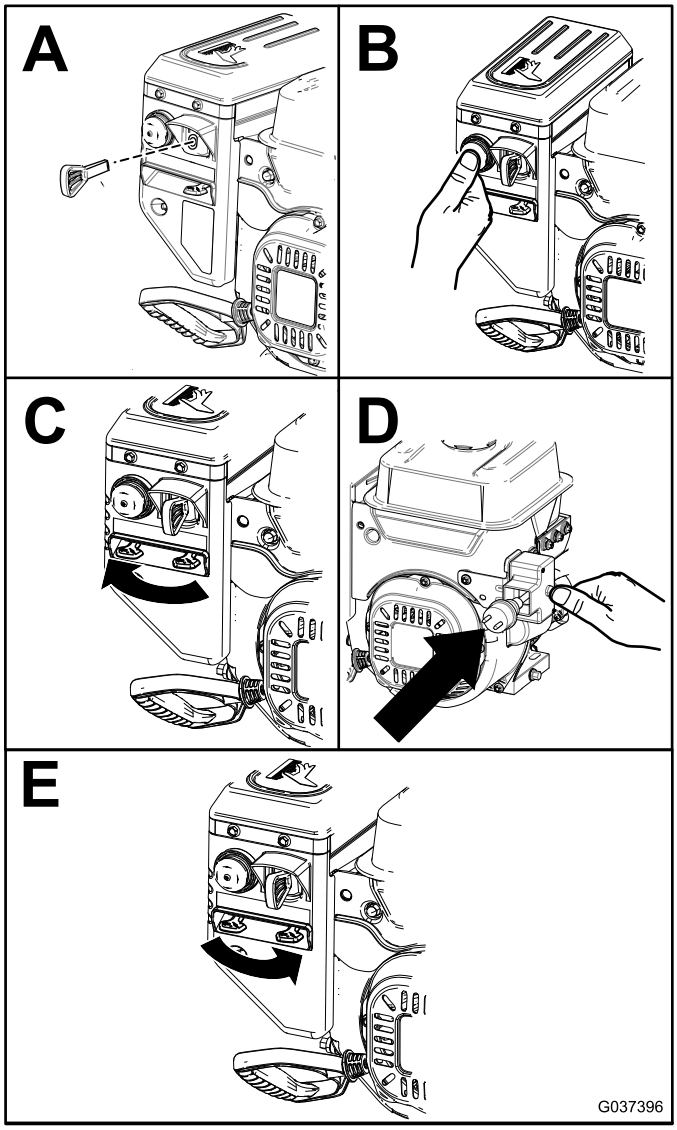

Figure 13

Note: Prime in the engine in B of Figure 13 according to the following table:

Suggested Number of Primes	Temperature
3	-23°C (-10°F) and above
6	Below -23°C (-10°F)

To use the electric starter (electric start only), connect a power cord to the electric-start plug-in first and then to a power source with a residual-current device (RCD). Use only a H05VV-F or H05RN-F power cord recommended for outdoor use that is not longer than 15 m (for a 1.0 mm² cord) or 30 m (for a 1.5 mm² cord).

Important: Do not use a worn or damaged power cord.

Important: To prevent damaging the electric starter, run it in short cycles (5 seconds on, 5 seconds off), no more than 10 times. If the engine still does not start, take the machine to an Authorized Service Dealer for service.

⚠ WARNING

The electrical cord can become damaged, causing a shock or fire.

Thoroughly inspect the electrical cord before using the machine. If the cord is damaged, do not operate the machine. Replace or repair the damaged cord immediately. Contact an Authorized Service Dealer for assistance.

⚠ CAUTION

If you leave the machine plugged into a power source, someone can inadvertently start the machine and injure people or damage property.

Unplug the power cord whenever you are not starting the machine.

Engaging the Auger

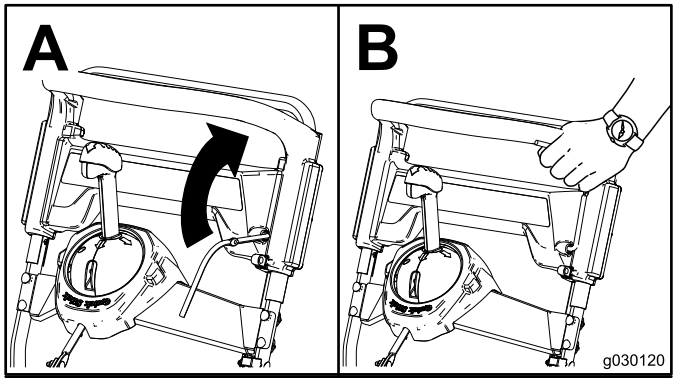

Figure 14

Disengaging the Auger

To disengage the auger, release the auger lever.

Self-Propelling the Machine

To operate the self-propel drive, simply walk with your hands on the upper handle and your elbows at your sides, and the machine will automatically keep pace with you (Figure 15).

Note: You can self-propel the machine with the auger engaged or disengaged.

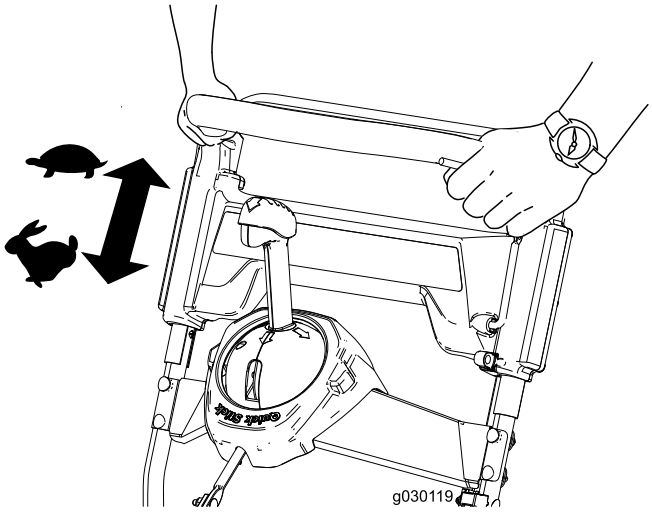

Figure 15

Shutting Off the Engine

To shut off the engine, remove the key from the ignition or move the key to the middle position.

Operating the Quick Stick®

Note: The blue knob must be fully pressed to release the latch and operate the Quick Stick®.

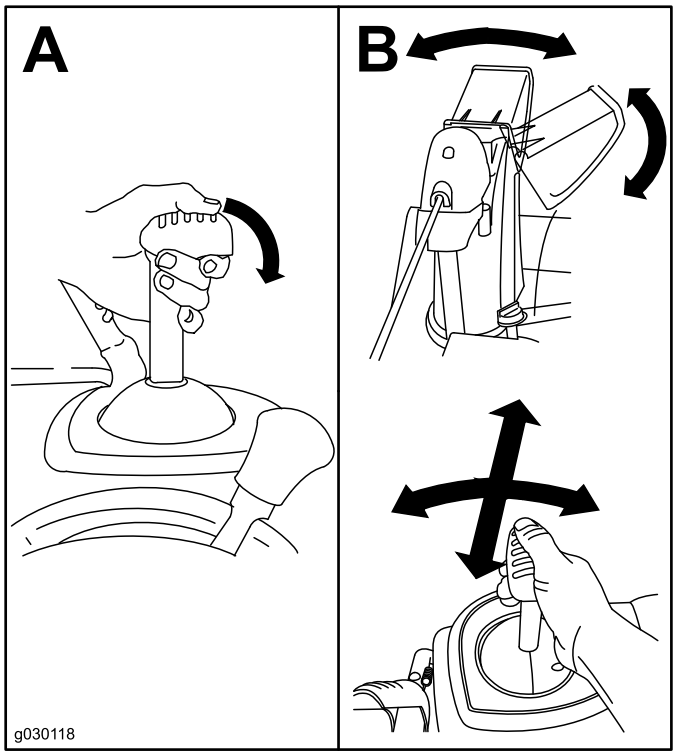

Figure 16

Clearing a Clogged Discharge Chute

Important: Hand contact with the rotating auger inside the discharge chute is the most common cause of injury associated with snowthrowers. Never use your hand to clean out the discharge chute.

1. While remaining in the operating position, release the self-propel handle.
2. Engage the auger.
3. Push down on the handle to raise the front of the machine a few inches (centimeters) off the pavement., then lift the handles quickly to bump the front of the machine onto the pavement.
4. Disengage the auger.
5. Repeat steps 1 through 4, if necessary, until a stream of snow comes out of the discharge chute.

Note: If you cannot unclog the discharge chute by bumping the front of the machine, **shut off the engine, wait for all moving parts to stop, and use a snow-cleanout tool (not included); never use your hand.**

Important: Unclogging the discharge chute by bumping the front of the machine on the pavement may cause the skids to move. Adjust the skids and tighten the skid bolts securely; refer to Checking and Adjusting the Skids (page 14).

Operating Tips

⚠ WARNING

The auger can throw stones, toys, and other foreign objects and cause serious personal injury to the operator or to bystanders.

- **Keep the area to be cleared free of all objects that the rotor blades could pick up and throw.**
- **Keep all children and pets away from the area of operation.**
- Remove the snow as soon as possible after it falls.
- If the machine does not propel itself forward on slippery surfaces or in heavy snow, push forward on the handle, but allow the machine to work at its own pace.
- Overlap each swath to ensure complete snow removal.
- Discharge the snow downwind whenever possible.

After Operation

Safety

- Never store the machine with fuel in the fuel tank inside a building where ignition sources are present, such as hot water heaters, space heaters, or clothes dryers. Allow the engine to cool before storing in any enclosure.
- When storing the machine for more than 30 days, refer to the Storage section for important details.

Preventing Freeze-up after Use

- Let the engine run for a few minutes to prevent moving parts from freezing. Shut off the engine, wait for all moving parts to stop, and remove ice and snow from the machine.
- Clean off any snow and ice from the base of the chute.
- Rotate the discharge chute left and right to free it from any ice buildup.
- With the ignition key in the OFF position, pull the recoil-start handle several times or connect the electrical cord to a power source and the machine and push the electric-start button once to prevent the recoil starter and/or the electric starter from freezing up.
- In snowy and cold conditions, some controls and moving parts may freeze. Do not use excessive force when trying to operate frozen controls. If you have difficulty operating any control or part, start the engine and let it run for a few minutes.
- Do not use the chute control to attempt to move a frozen discharge chute. Hold down the blue knob and use your hands to rotate the chute.
- Transporting the machine in an open trailer or vehicle can cause the controls or discharge chute to freeze.

Maintenance

Note: Determine the left and right sides of the machine from the normal operating position.

Recommended Maintenance Schedule(s)

Maintenance Service Interval	Maintenance Procedure
After the first hour	• Check for loose fasteners and tighten them if necessary.
After the first 2 hours	• Change the engine oil. • Inspect the auger cable and adjust it if necessary. • Inspect the transmission cable and adjust it if necessary.
Before each use or daily	• Check the engine-oil level and add oil if necessary.
Every 100 hours	• Replace the spark plug.
Yearly	• Check the skids and adjust them if necessary. • Inspect the throwing edges and have an Authorized Service Dealer replace the throwing edges and scraper if necessary. • Change the engine oil. • Inspect the auger cable and adjust it if necessary. • Inspect the transmission cable and adjust it if necessary. • Check the tire pressure. • Check for loose fasteners and tighten them if necessary. • Have an Authorized Service Dealer inspect the drive belt and replace it if necessary.
Yearly or before storage	• Prepare the machine for storage.

Maintenance Safety

Read the following safety precautions before performing any maintenance on the machine:

- Before performing any maintenance, service, or adjustment, shut off the engine and remove the key. If major repairs are ever needed, contact an Authorized Service Dealer.
- Check all fasteners at frequent intervals for proper tightness to be sure the machine is in safe working condition.
- Maintain or replace safety and instruction labels, as necessary.
- Do not change the governor settings on the engine.
- Purchase only genuine Toro replacement parts and accessories.

Checking the Engine-Oil Level

Service Interval: Before each use or daily

1. Remove the dipstick, wipe it clean, then fully insert the dipstick **without threading it in.**
2. Remove the dipstick and check the oil level.
   - If the oil level is below the Add mark on the dipstick (Figure 17), add oil. Refer to Changing the Engine Oil (page 14).
   - If the oil level above the Full mark (Figure 17), drain the excess oil until the oil level is at the Full mark on the dipstick; refer to Changing the Engine Oil (page 14).

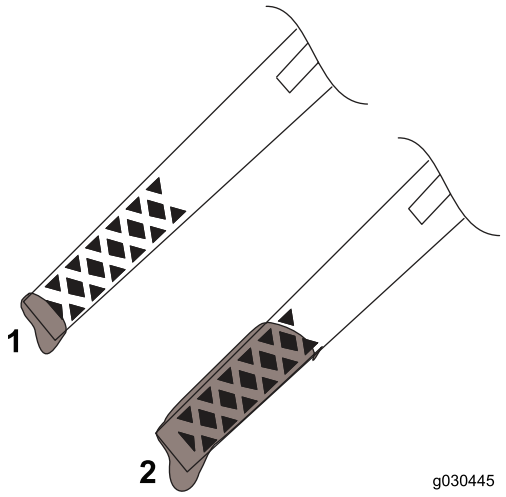

Figure 17

1. Low oil level—add oil
2. Correct oil level

Checking and Adjusting the Skids

Service Interval: Yearly

Check the skids to ensure that the auger does not contact the paved surface. Adjust the skids as needed to compensate for wear (Figure 18).

1. Loosen the skid bolts.
2. Slide a 5 mm (3/16 inch) board underneath the scraper.

   Note: Using a thinner board will result in a more aggressive scraper. A thicker board will result in a less aggressive scraper.
3. Lower the skids to the ground.

   Note: Ensure the skids are flat on the ground.
4. Tighten the skid bolts.

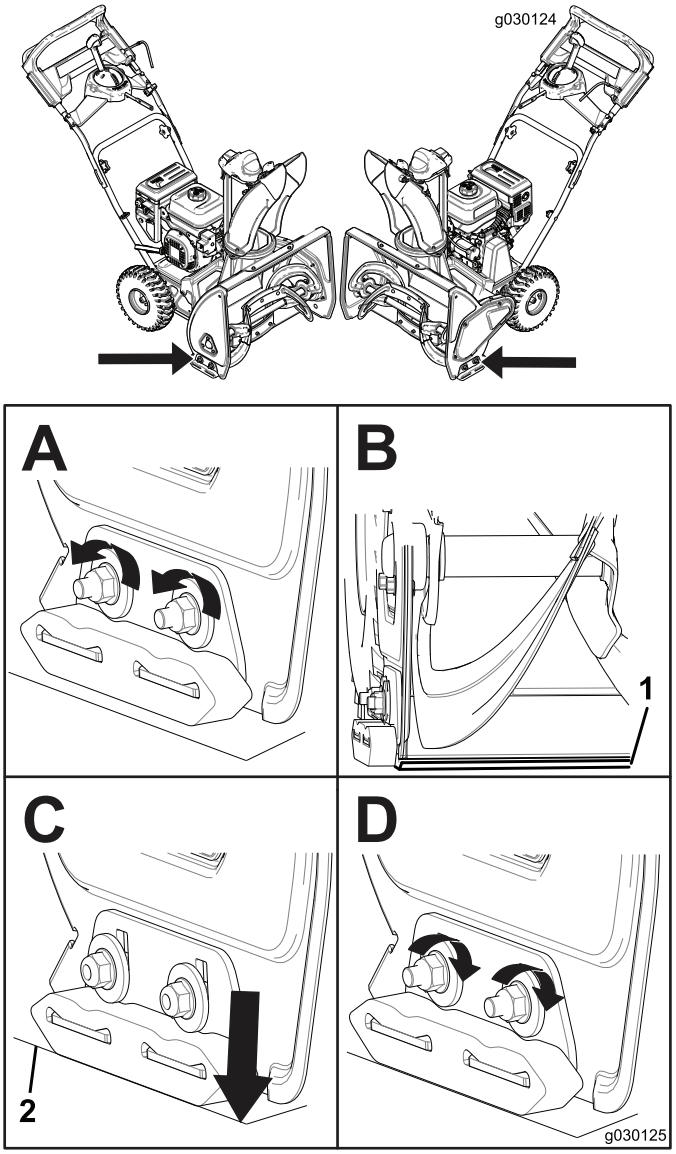

Figure 18

1. 5 mm (3/16 inch) board
2. Ground

Inspecting the Throwing Edges

Service Interval: Yearly—Inspect the throwing edges and have an Authorized Service Dealer replace the throwing edges and scraper if necessary.

Before each session, inspect the throwing edges for wear. When a throwing edge has worn down to the wear indicator hole, have an Authorized Service Dealer replace the throwing edges (Figure 19).

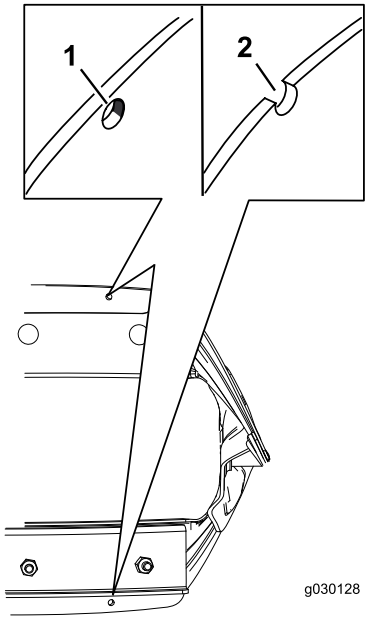

Figure 19

1. The wear indicator hole is intact; you do not need to replace the throwing edges.
2. The wear indicator hole is exposed; replace both throwing edges.

Changing the Engine Oil

Service Interval: After the first 2 hours

Yearly

Run the engine a few minutes before changing the oil to warm it. Warm oil flows better and carries more contaminants.

1. Move the machine to a level surface.
2. Place an oil-drain pan under the oil-drain plug, remove the oil-drain plug, and tip the machine backward and drain the used oil in the oil-drain pan (Figure 20).

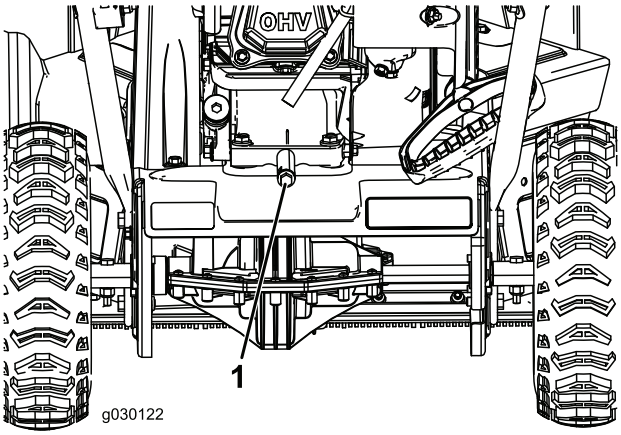

Figure 20

1. Oil-drain plug

3. After draining the used oil, return the machine to the operating position.
4. Install the oil-drain plug and tighten it securely.
5. Clean around the oil-fill cap.
6. Use Figure 21 below to select the best oil viscosity for the outdoor temperature range expected:

Model	Max fill
38711	0.5 L (16.9 oz)
38712	0.7 L (23.7 oz)

Oil type: automotive detergent oil with an API service classification of SJ, SL, or higher.

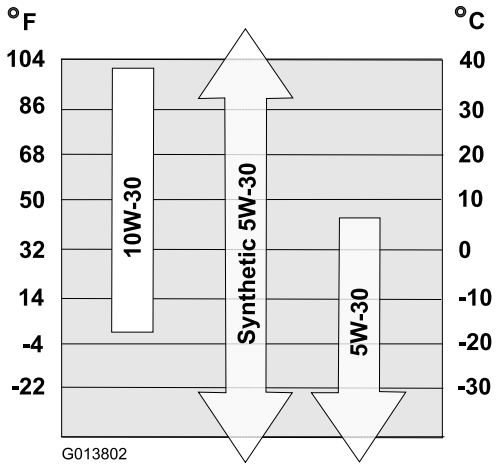

Figure 21

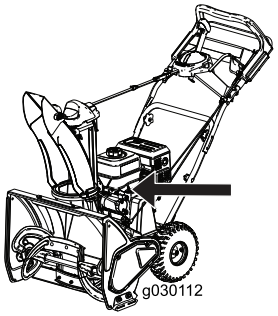

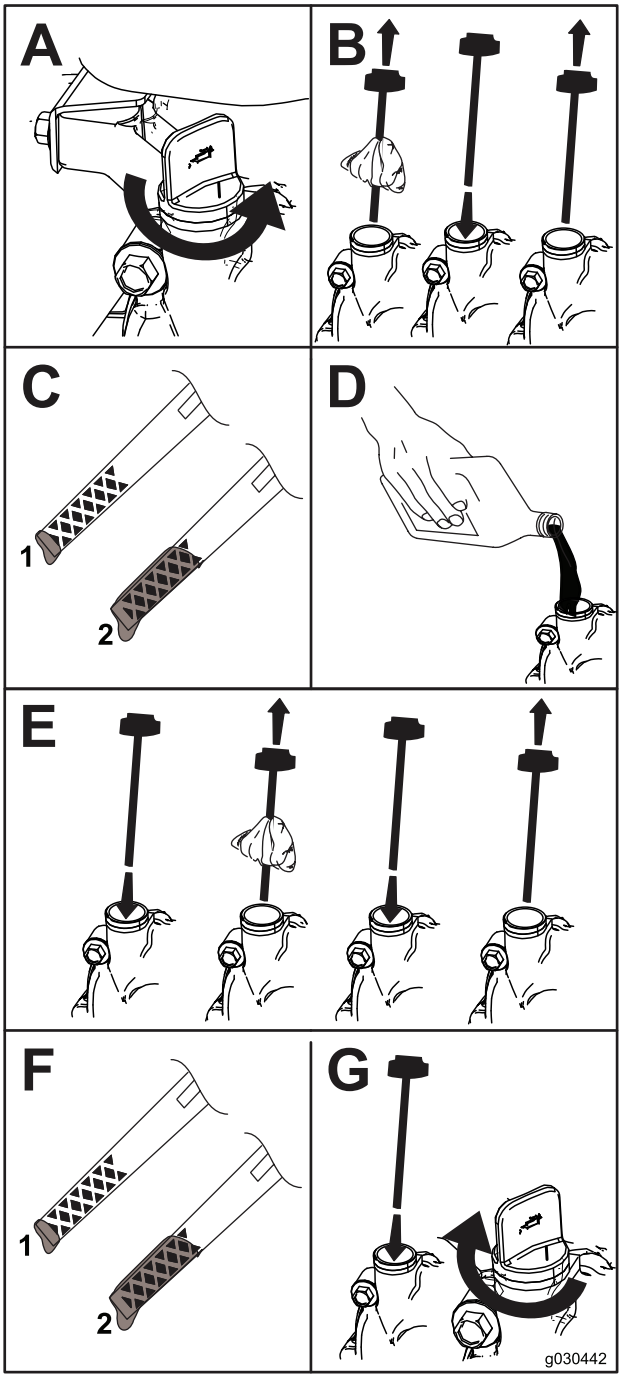

Figure 22

1. Low oil level—add oil
2. Correct oil level

Replacing the Spark Plug

Service Interval: Every 100 hours—Replace the spark plug.

⚠ WARNING

Replacing the spark plug while the engine is hot can result in burns.

Wait until the engine is cool to replace the spark plug.

Use a Toro spark plug or equivalent (Champion® RN9YC or NGK BPR6ES).

1. Remove the boot (Figure 23).

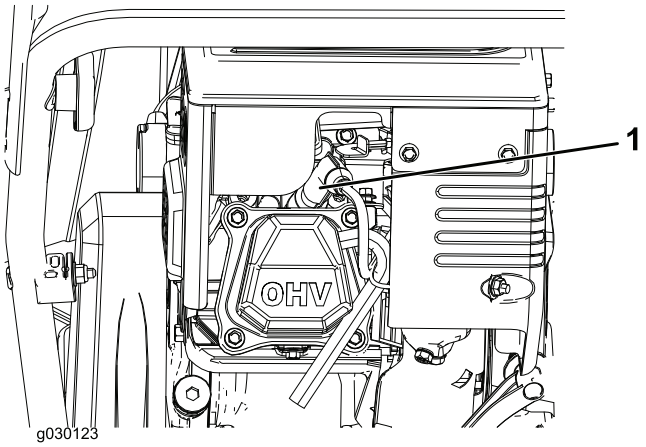

Figure 23

2. Clean around the base of the spark plug.
3. Remove and discard the old spark plug.

   Note: You will need a ratchet wrench extension to remove the spark plug.
4. Set the gap between the electrodes on a new spark plug at 0.76 mm (0.030 inch) as shown in Figure 24.

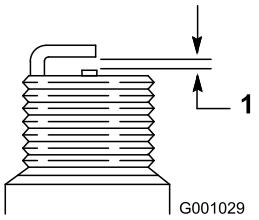

Figure 24

1. 0.76 mm (0.030 inch)

Adjusting the Auger Cable

Service Interval: After the first 2 hours

Yearly

If the drive belt slips or squeals under heavy load, adjust the auger cable.

1. Loosen the nut on the lower cable clamp, but do not remove it (Figure 25).

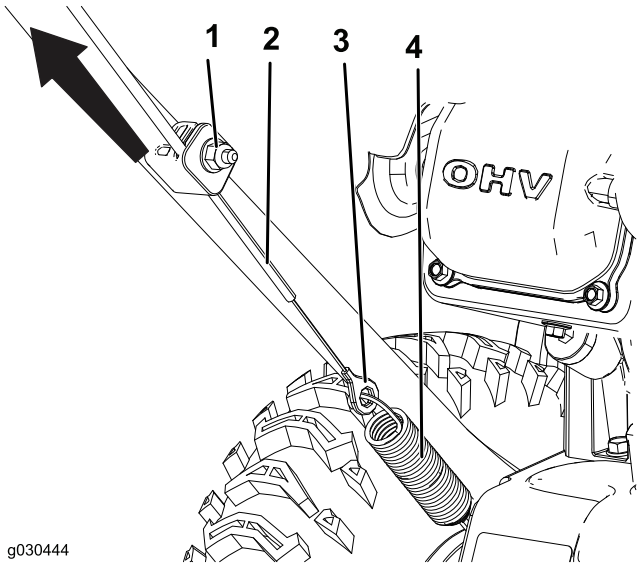

Figure 25

1. Nut
2. Cable
3. Connector
4. Spring

2. Pull the cable up to remove some slack (Figure 25).

   Important: Do not remove all the slack from the cable. Removing all the slack from the cable will prevent the auger from stopping properly.
3. Hold the cable in place and tighten the nut (Figure 25).

Adjusting the Transmission Cable

Service Interval: After the first 2 hours

Yearly

If the wheels easily stall out, or if the wheels drive without engaging the self-propel handle, adjust the transmission cable.

1. Loosen the nut on the upper cable clamp, but do not remove it (Figure 26).

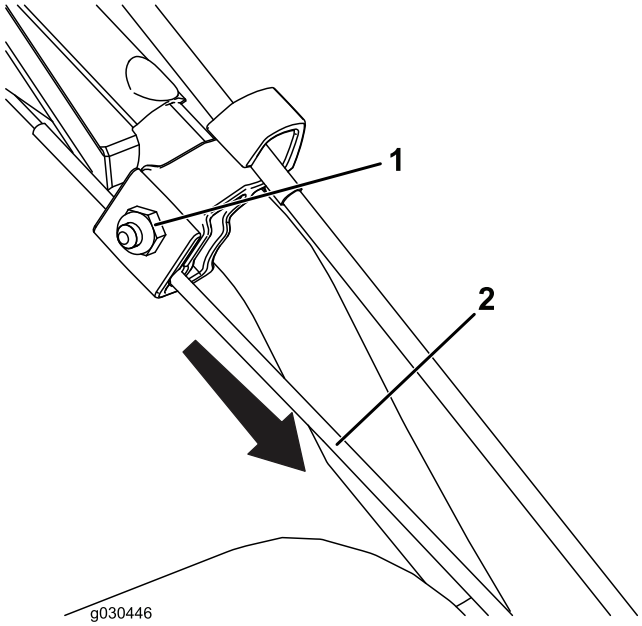

Figure 26

1. Nut
2. Cable

2. Pull the cable down to remove most of the slack in the cable (Figure 26).

   Important: Do not remove all the slack from the cable. Removing all the slack from the cable may cause the wheels to engage without engaging the self-propel handle.

3. Tighten the nut (Figure 26).

Checking the Tire Pressure

Service Interval: Yearly

Set the tire pressure equally in both tires to between 103 and 137 kPa (15 and 20 psi).

Storage

Storing the Snowthrower

⚠ WARNING

- **Gasoline fumes are highly flammable, explosive, and dangerous if inhaled. If you store the machine in an area with an open flame, the gasoline fumes may ignite and cause an explosion.**
- **Do not store the machine in a house (living area), basement, or any other area where ignition sources may be present, such as hot water and space heaters, clothes dryers, furnaces, and other like appliances.**
- **Do not tip the machine backward with fuel in the fuel tank; otherwise, fuel may leak out of the machine.**

1. On the last refueling of the season, add fuel stabilizer to fresh fuel as directed by the engine manufacturer.
2. Run the engine for 10 minutes to distribute the conditioned fuel through the fuel system.
3. Shut off the engine, allow it to cool, and siphon the fuel tank or run the engine until it stops.
4. Start the engine and run it until it stops.
5. Choke or prime the engine, start it a third time, and run the engine until it will not start.
6. Drain the fuel in the carburetor through the carburetor drain bolt into an approved gasoline container.
7. Dispose of unused fuel properly. Recycle it according to local codes, or use it in your automobile.
8. While the engine is still warm, change the engine oil. Refer to Changing the Engine Oil (page 14).
9. Remove the spark plug.
10. Squirt 2 teaspoons of oil into the spark-plug hole.
11. Install the spark plug by hand and then torque it to 27 to 30 N·m (20 to 22 ft-lb).
12. With the ignition key in the OFF position, pull the recoil-start handle slowly to distribute the oil on the inside of the cylinder.
13. Clean the machine.
14. Touch up chipped surfaces with paint available from an Authorized Service Dealer. Sand affected areas before painting, and use a rust preventative to prevent the metal parts from rusting.
15. Tighten any loose fasteners. Repair or replace any damaged parts.
16. Cover the machine and store it in a clean, dry place out of the reach of children. Allow the engine to cool before storing it in any enclosure.

Notes:

Notes:

European Privacy Notice

The Information Toro Collects
Toro Warranty Company (Toro) respects your privacy. In order to process your warranty claim and contact you in the event of a product recall, we ask you to share certain personal information with us, either directly or through your local Toro company or dealer.

The Toro warranty system is hosted on servers located within the United States where privacy law may not provide the same protection as applies in your country.

BY SHARING YOUR PERSONAL INFORMATION WITH US, YOU ARE CONSENTING TO THE PROCESSING OF YOUR PERSONAL INFORMATION AS DESCRIBED IN THIS PRIVACY NOTICE.

The Way Toro Uses Information
Toro may use your personal information to process warranty claims, to contact you in the event of a product recall and for any other purpose which we tell you about. Toro may share your information with Toro's affiliates, dealers or other business partners in connection with any of these activities. We will not sell your personal information to any other company. We reserve the right to disclose personal information in order to comply with applicable laws and with requests by the appropriate authorities, to operate our systems properly or for our own protection or that of other users.

Retention of your Personal Information
We will keep your personal information as long as we need it for the purposes for which it was originally collected or for other legitimate purposes (such as regulatory compliance), or as required by applicable law.

Toro's Commitment to Security of Your Personal Information
We take reasonable precautions in order to protect the security of your personal information. We also take steps to maintain the accuracy and current status of personal information.

Access and Correction of your Personal Information
If you would like to review or correct your personal information, please contact us by email at legal@toro.com.

Australian Consumer Law

Australian customers will find details relating to the Australian Consumer Law either inside the box or at your local Toro Dealer.

Emission Control Warranty Statement

For the United States, California, and Canada



Your Warranty Rights and Obligations

The California Air Resources Board (CARB), the U.S. Environmental Protection Agency (EPA), and The Toro Company, are pleased to explain the emission control system warranty on your 2017–2018 small off-road engine/equipment. In California and the United States, new small off-road engines/equipment must be designed, built, and certified to meet stringent anti-smog standards. The Toro Company warrants the emission control system on your small off-road engine/equipment for the period of time listed below, provided there has been no abuse, neglect, or improper maintenance of your small off-road engine/equipment.

Your emission control system may include parts such as the carburetor, fuel-injection system, the ignition system, catalytic converter, fuel tanks, fuel lines, fuel caps, valves, canisters, filters, vapor hoses, clamps, connectors, and other associated emission-related components.

Where a warrantable condition exists, The Toro Company will repair your small off-road engine/equipment at no cost to you including diagnosis, parts and labor.

Manufacturer's Warranty Coverage

This emission control system is warranted for two years or the duration of The Toro Warranty, whichever is longer. If any emission-related part on your engine/equipment is defective, the part will be repaired or replaced by The Toro Company.

Owner Responsibilities

As the small off-road engine owner, you are responsible for the performance of the required maintenance listed in your *Operator's Manual*. We recommend that you retain all receipts covering maintenance on your small off-road engine/equipment, but we cannot deny warranty solely for the lack of receipts.

As the small off-road engine/equipment owner, you should however be aware that we may deny you warranty coverage if your small off-road engine/equipment or a part has failed due to abuse, neglect, improper maintenance or unapproved modifications.

You are responsible for presenting your small off-road engine/equipment to a Toro Distribution Center or Service Center as soon as a problem exists. The warranty repairs should be completed in a reasonable amount of time, not to exceed thirty (30) days.

If you have any questions regarding your warranty coverage, contact us at:

Customer Care Department, Consumer Division
Toro Warranty Company
8111 Lyndale Avenue South
Bloomington, MN 55420-1196
1-888-384-9939 (U.S. and Canadian customers)
email Customer Support at: www.toro.com

General Emissions Warranty Coverage

The Toro Company warrants to the ultimate purchaser and each subsequent purchaser that the small off-road engine/equipment is:

- Designed, built, and certified to conform with all applicable emissions regulations; and
- Free from defects in materials and workmanship that could cause the failure of a warranted part; and
- Identical in all material respects to the parts as described in the application for certification.

The warranty period begins on the date the small off-road engine/equipment is delivered to an ultimate purchaser. The warranted period is two years or the duration of The Toro Warranty, whichever is longer.

Subject to certain conditions and exclusions as stated below, the warranty on evaporative emissions-related parts is as follows:

1. Any warranted part that is not scheduled for replacement as required maintenance in the written instructions supplied, is warranted for the warranty period stated above. If the part fails during the period of warranty coverage, the part will be repaired or replaced by The Toro Company. Any such part repaired or replaced under warranty will be warranted for the remainder of the warranty period.
2. Any warranted part that is scheduled only for regular inspection in the written instructions supplied is warranted for the warranty period stated above. Any such part repaired or replaced under the warranty will be warranted for the remainder of the warranty period.
3. Any warranted part that is scheduled for replacement as required maintenance in the written instructions supplied is warranted for the period of time before the first scheduled replacement date for that part. If the part fails before the first scheduled replacement, the part will be repaired or replaced by The Toro Company. Any such part repaired or replaced under warranty will be warranted for the remainder of the period prior to the first scheduled replacement point for the part.
4. Repair or replacement of any warranted part under the warranty provisions herein must be performed at an Authorized Service Dealer at no charge to the owner.
5. Warranty services or repairs will be provided at all Service Dealers authorized to service the subject engines or equipment.
6. The small off-road engine/equipment owner will not be charged for diagnostic labor that is directly associated with diagnosis of a defective, emission-related warranted part, provided that such diagnostic work is performed at an Authorized Service Dealer.
7. The Toro Company is liable for damages to other engine/equipment components caused by a failure under warranty of any warranted part.
8. Throughout the small off-road engine/equipment warranty period stated above, The Toro Company will maintain a supply of warranted parts sufficient to meet the expected demand for such parts.
9. Manufacturer approved replacement parts may be used in the performance of any warranty maintenance or repairs and must be provided without charge to the owner. Such use will not reduce the warranty obligations of The Toro Company.
10. Add-on or modified parts that are not approved by The Toro Company may not be used. The use of a non-approved add-on or modified parts by the purchaser will be grounds for disallowing a warranty claim. The Toro Company will not be liable to warrant failures of warranted parts caused by the use of an non-approved add-on or modified parts.

Warranted Parts

The following emission warranty parts are covered, to the extent these parts were present on the Toro engine/equipment and/or Toro supplied fuel system:

1. Fuel System Parts
    - Carburetor and internal parts
    - Cold starting enrichment (primer or choke)
    - Fuel pump
    - Fuel line, fittings, and clamps
    - Fuel tank, cap, and tether
    - Carbon canister
2. Air Induction System
    - Air cleaner
    - Intake manifold
    - Crankcase vent and line(s)
    - Purge line and fittings
3. Ignition System
    - Spark plug(s) and wire(s)
    - Magneto ignition system
4. Catalytic Exhaust System
    - Catalytic converter
    - Exhaust manifold
    - Air injector system and valve(s)
5. Miscellaneous Items Used in Emission Control System
    - Valves, switches, and linkages
    - Connectors, fittings, and brackets

The Toro Warranty and The Toro GTS Starting Guarantee

Residential Snow Products (Int'l)

Conditions and Products Covered

The Toro Company and its affiliate, Toro Warranty Company, pursuant to an agreement between them, jointly promise to repair the Toro Product listed below if defective in materials or workmanship or if the Toro GTS (Guaranteed to Start) engine will not start on the first or second pull, provided the routine maintenance required in the *Operator's Manual* have been performed.

This warranty covers the cost of parts and labor, but you must pay transportation costs.

The following time periods apply from the original date of purchase:

Products	**Warranty Period**
Snowthrowers	
• Powerlite and CCR – Single Stage	2 years Residential Use[2] 45 Days Commercial Use
—Engine	2 years GTS Guarantee, Residential Use[2]
• SnowMax	3 years Residential Use[2] 45 Days Commercial Use
—Chute, chute deflector, and impeller housing	Lifetime (original owner only)[1]
• PowerMax – Two Stage	3 years Residential Use[2] 45 Days Commercial Use
—Chute, chute deflector and impeller housing	Lifetime (original owner only)[1]
Electric Snowthrowers	2 years Residential Use[2] No Warranty for Commercial Use

[1]Original Purchaser means the person who originally purchased the Toro Product.

[2]Residential use means use of the product on the same lot as your home. Use at more than one location is considered commercial use and the commercial use warranty would apply.

Owner Responsibilities

You must maintain your Toro Product by following the maintenance procedures described in the *Operator's Manual*. Such routine maintenance, whether performed by a dealer or by you, is at your expense.

Instructions for Obtaining Warranty Service

If you think that your Toro Product contains a defect in materials or workmanship, follow this procedure:

1. Contact your seller to arrange service of the product. If for any reason it is impossible for you to contact your seller, you may contact any Toro Authorized Distributor to arrange service. Visit http://www.toro.comto locate a Toro distributor in your area.
2. Bring the product and your proof of purchase (sales receipt) to the servicing outlet. If for any reason you are dissatisfied with the servicing outlet's analysis or with the assistance provided, contact us at:

   Toro Warranty Company
   Toro Customer Care Department, RLC Division
   8111 Lyndale Avenue South
   Bloomington, MN 55420-1196 USA
   001–952–948–4707

Items and Conditions Not Covered

There is no other express warranty except for special emission system coverage and engine warranty coverage on some products. This express warranty does not cover the following:

- Cost of regular service or wear parts, such as rotor blades (paddles), scraper blades, belts, fuel, lubricants, oil changes, spark plugs, cable/linkage or brake adjustments
- Components failing due to normal wear
- Any product or part which has been altered or misused or neglected or requires replacement or repair due to accidents or lack of proper maintenance
- Pickup and delivery charges
- Repairs or attempted repairs by anyone other than an Authorized Toro Service Dealer
- Repairs necessary due to failure to follow recommended fuel procedure (consult *Operator's Manual* for more details)
  - Removing contaminants from the fuel system is not covered
  - Use of old fuel (more than one month old) or fuel which contains more than 10% ethanol or more that 15% MTBE
  - Failure to drain the fuel system prior to any period of non-use over one month
- Repairs or adjustments to correct starting difficulties due to the failure to follow proper maintenance procedures or recommended fuel procedure.
- Special operational conditions where starting may require more than two pulls:
  - First time starts after extended period of non-use over three months or seasonal storage
  - Improper starting procedures - if you are having difficulty starting your unit, please check the *Operator's Manual* to ensure that you are using the correct starting procedures. This can save an unnecessary visit to an Authorized Toro Service Dealer.

General Conditions

The purchaser is covered by the national laws of each country. The rights to which the purchaser is entitled with the support of these laws are not restricted by this warranty.