Form No. 3407-349 Rev A

TORO®

Count on it.

Operator's Manual

# Direct Drive Trencher

## RT600 Traction Unit

**Model No. 25200—Serial No. 316000001 and Up**
**Model No. 25200E—Serial No. 316000001 and Up**

Register at www.Toro.com.
Original Instructions (EN)

*3407-349* A

**⚠ WARNING**

**CALIFORNIA**
**Proposition 65 Warning**

**This product contains a chemical or chemicals known to the State of California to cause cancer, birth defects, or reproductive harm.**

# Introduction

This attachment is designed to dig trenches in soil to bury cabling and piping for various applications. It is not intended to cut rock, wood, or any other material other than soil.

Read this information carefully to learn how to operate and maintain your product properly and to avoid injury and product damage. You are responsible for operating the product properly and safely.

You may contact Toro directly at www.Toro.com for product and accessory information, help finding a dealer, or to register your product.

Whenever you need service, genuine Toro parts, or additional information, contact an Authorized Toro Service Dealer or Toro Customer Service and have the model and serial numbers of your product ready. Figure 1 illustrates the location of the model and serial numbers on the product. Write the numbers in the space provided.

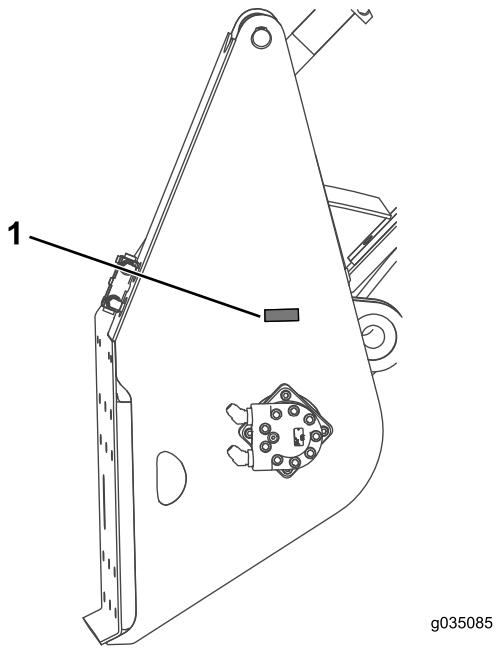


**Figure 1**

1. Location of the model and serial number plate

**Model No.** _____

**Serial No.** _____

This manual identifies potential hazards and has safety messages identified by the safety-alert symbol (Figure 2), which signals a hazard that may cause serious injury or death if you do not follow the recommended precautions.



**Figure 2**

1. Safety-alert symbol

This manual uses 2 words to highlight information. **Important** calls attention to special mechanical information and **Note** emphasizes general information worthy of special attention.

# Contents

Safety ..... 3
Safety and Instructional Decals ..... 4
..... 5
Preparing the Machine ..... 5
Installing the Trencher Attachment ..... 5
Installing the Auger ..... 6
Installing the Restraint-Bar Brackets ..... 6
Installing the Hydraulic Hoses ..... 7
Installing the Boom ..... 8
Installing the Digging Chain ..... 12
Operation ..... 13
Selecting the Proper Components for the Trencher ..... 13
Using the Trencher ..... 15
Operating Tips ..... 17
Maintenance ..... 18
Greasing the Trencher ..... 18
Servicing the Trencher Digging Chain ..... 18
Replacing the Digging Chain ..... 23
Storage ..... 25
Troubleshooting ..... 26

© 2016—The Toro® Company
8111 Lyndale Avenue South
Bloomington, MN 55420



Contact us at www.Toro.com.
Printed in the USA
All Rights Reserved

# Safety

Improperly using or maintaining the trencher can result in injury. To reduce the potential for injury, comply with these safety instructions and those in the machine *Operator's Manual.* Always pay attention to the safety alert symbol, which means Caution, Warning, or Danger—personal safety instruction. Failure to comply with the instruction may result in personal injury or death.

**⚠ DANGER**

There may be buried power, gas, and/or telephone lines in the work area. An electric shock or an explosion may occur if you dig into a utility line.

Have the property or work area marked for buried lines and do not dig in marked areas. Contact your local marking service or utility company to have the property marked (for example, in the United States, call 811 for the nationwide marking service).

**⚠ DANGER**

The moving teeth and auger will cut or sever your hands, feet, or other body parts.

- Keep hands, feet, and any other part of your body or clothing away from moving teeth, auger, or other parts.
- Before adjusting, cleaning, repairing, or inspecting the trencher, lower the trencher to the ground, shut off the engine, wait for all moving parts to stop, and remove the key.

**⚠ WARNING**

When the engine is off, an attachment in the raised position can gradually lower. Someone below the attachment may be pinned or injured by the attachment as it lowers.

Always lower the attachment each time you shut off the machine.

**⚠ WARNING**

When going up or down hill, the machine could overturn if the heavy end is toward the downhill side. Someone may be pinned or seriously injured by the machine if it overturns.

Operate the machine up and down slopes with the heavy end of the machine uphill. An attached trencher makes the back end of the machine heavy.

**⚠ WARNING**

Lightning can cause severe injury or death.

If lightning is seen or thunder is heard in the area, do not operate the machine; seek shelter.

**⚠ CAUTION**

Hydraulic fluid escaping under pressure can penetrate skin and cause injury. Fluid injected into the skin must be surgically removed within a few hours by a doctor familiar with this form of injury; otherwise, gangrene may result.

- Keep your body and hands away from pin-hole leaks or nozzles that eject high-pressure hydraulic fluid.
- Use cardboard or paper to find hydraulic leaks; never use your hands.

**⚠ CAUTION**

Hydraulic fittings, hydraulic lines/valves, and hydraulic fluid may be hot and can burn you if you touch them.

- Wear gloves when maintaining hydraulic components.
- Allow the traction unit and trencher to cool before touching hydraulic components.
- Do not touch hydraulic fluid spills.

# Safety and Instructional Decals

Safety decals and instructions are easily visible to the operator and are located near any area of potential danger. Replace any decal that is damaged or lost.

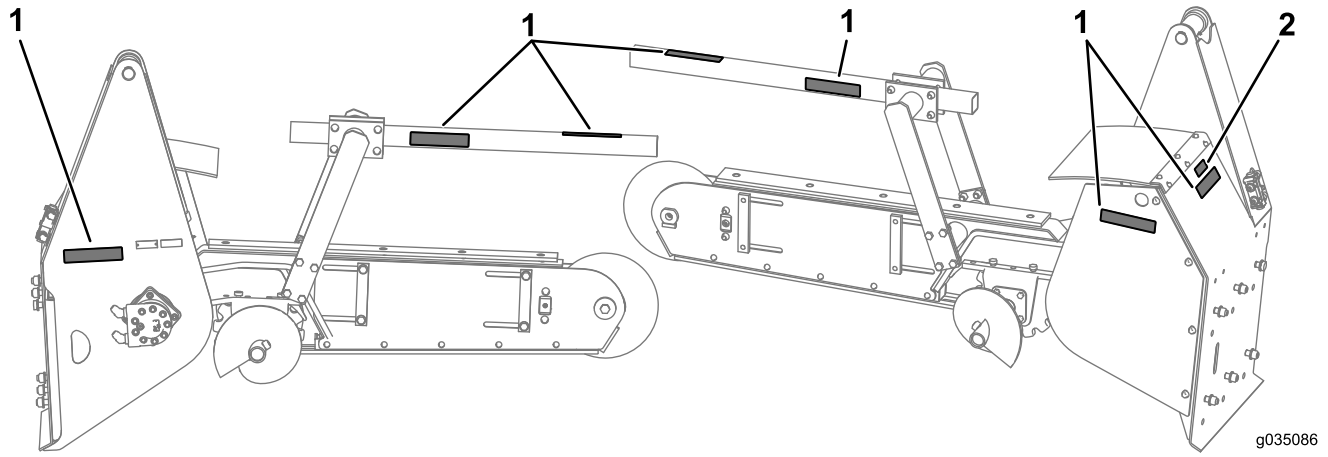


**Figure 3**

1. Decal 125-6670
2. Decal 125-6671

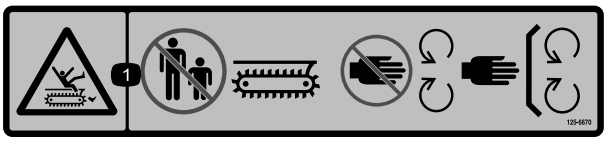


**125–6670**

1. Cutting/dismemberment hazard, trencher—keep bystanders away from the trencher; keep away from moving parts; keep all guards and safeties in place.

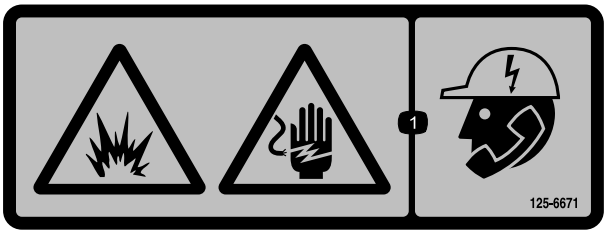


**125-6671**

1. Explosion hazard; electric shock hazard—call local utilities before digging.

# Preparing the Machine

**Important: Ensure that the lifting equipment has a lifting capacity of at least 405 kg (893 lb).**

1. Park the machine on a level surface.
2. Set the parking brake.
3. Turn the key to the OFF position.
4. Remove the key.
5. Disconnect the battery.

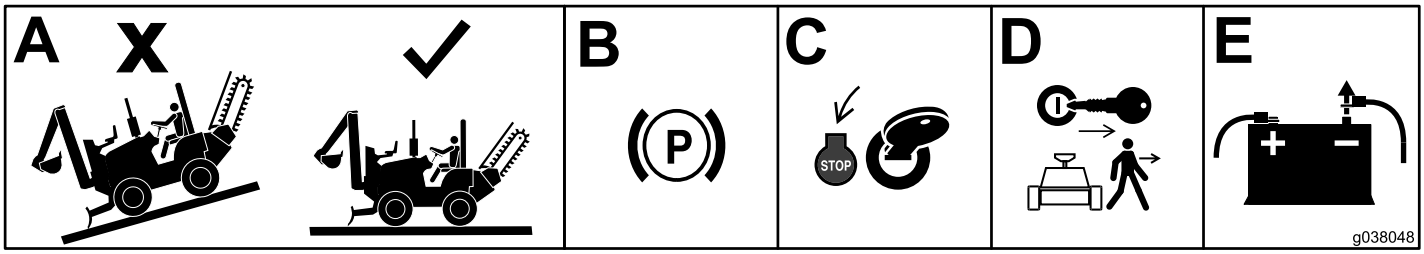


# Installing the Trencher Attachment

Raise the attachment off the floor.

**Important: Ensure that the lifting equipment has a lifting capacity of at least 405 kg (893 lb).**

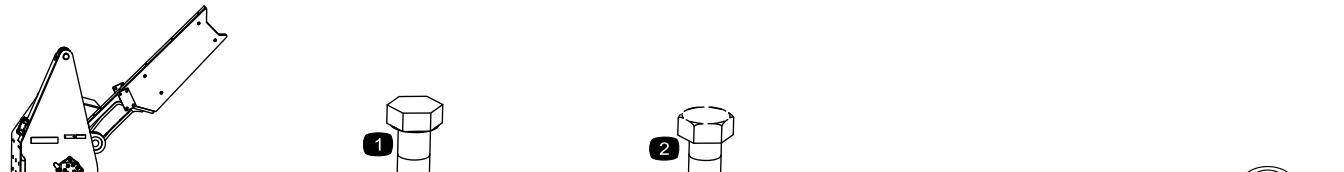


**1x** | **2x (3/4 x 2-1/4 inches)** | **4x (3/4 x 2-1/2 inches)** | **11x** | **6x (3/4 inch)**

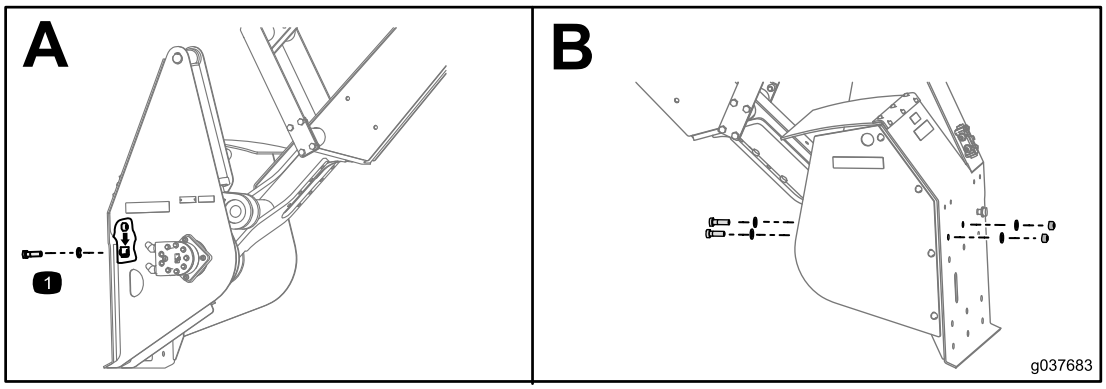


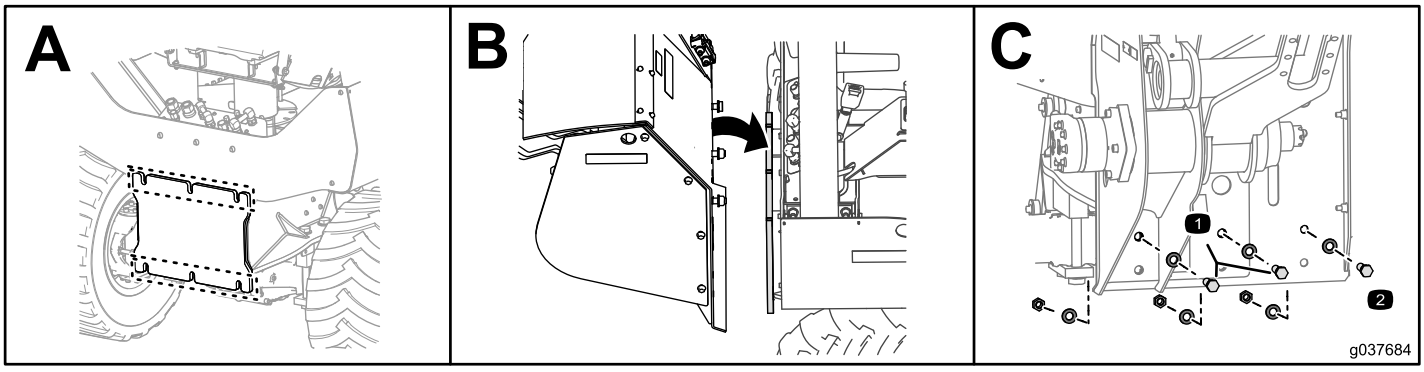

# Installing the Auger

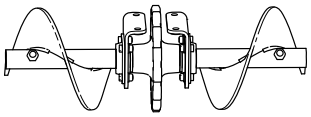



**4x**

**(5/8 x 2 inches)**



**4x**



**4x**

**(5/8 inch)**

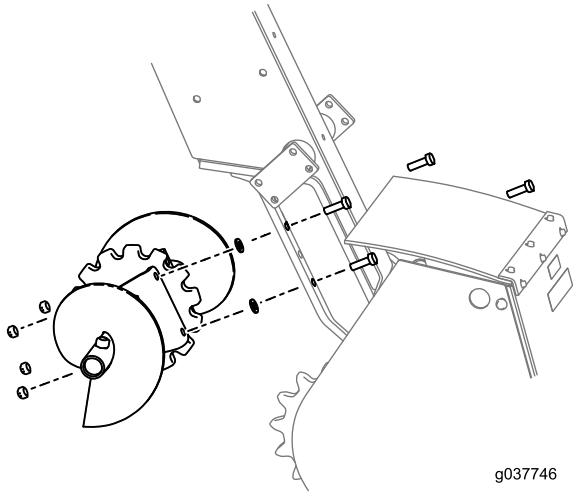


# Installing the Restraint-Bar Brackets

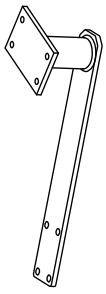

**1x**

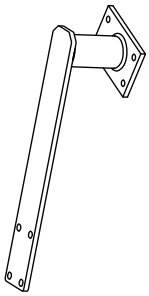

**1x**



**8x**

**(M12)**

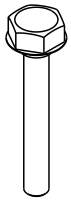

**8x**

**(M12 x 4-1/4 inches)**



**8x**

**(5/8 inch)**

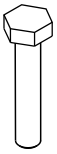

**8x**

**(5/8 x 2 inches)**

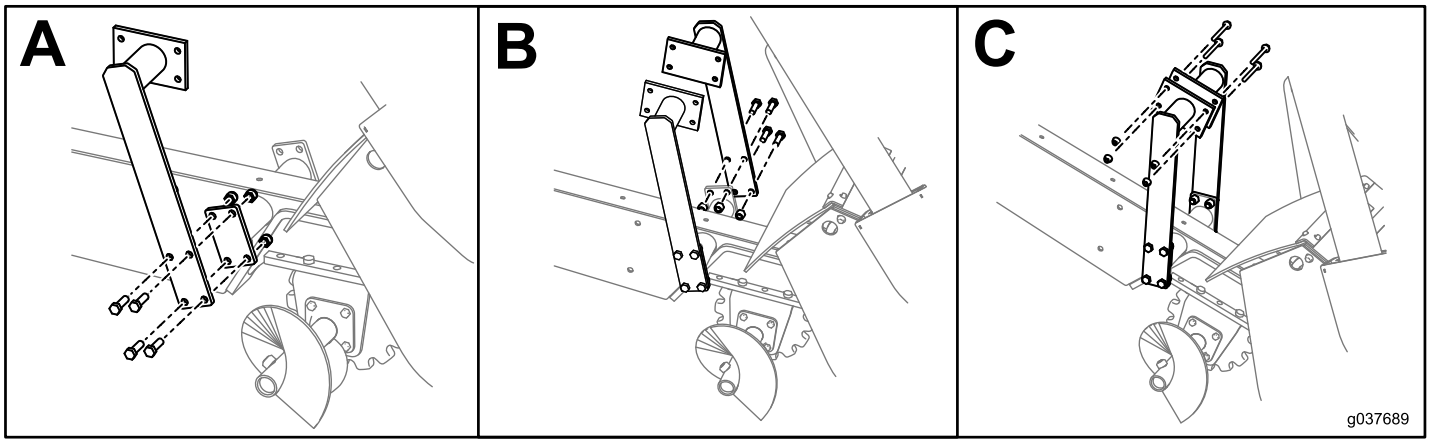

# Installing the Hydraulic Hoses



**2x**

**42 cm (16-1/2 inches)**

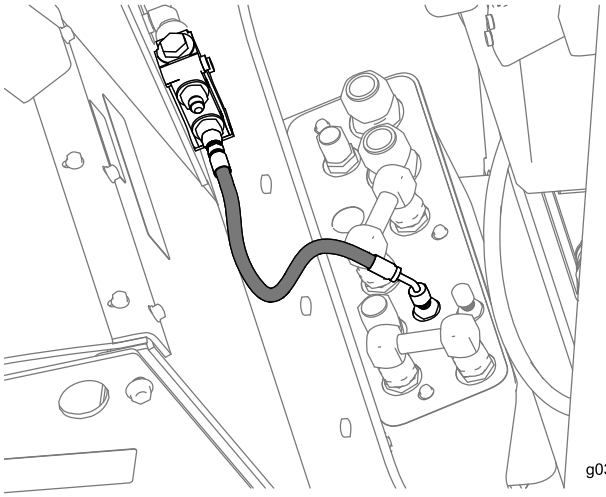


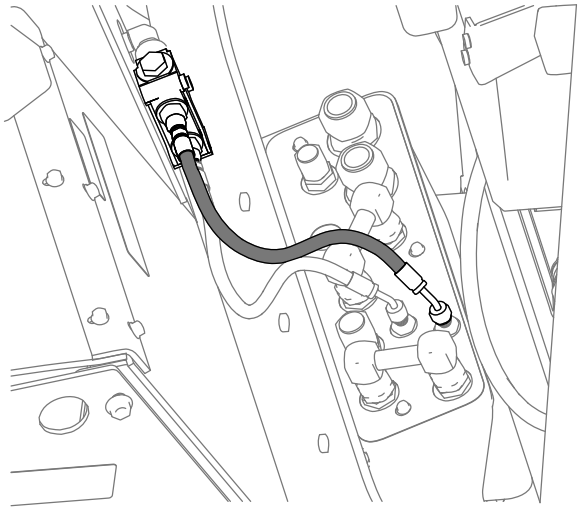


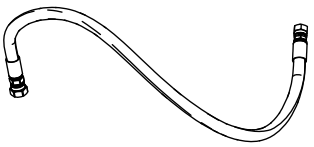

**1x**

**97 cm (38 inches)**

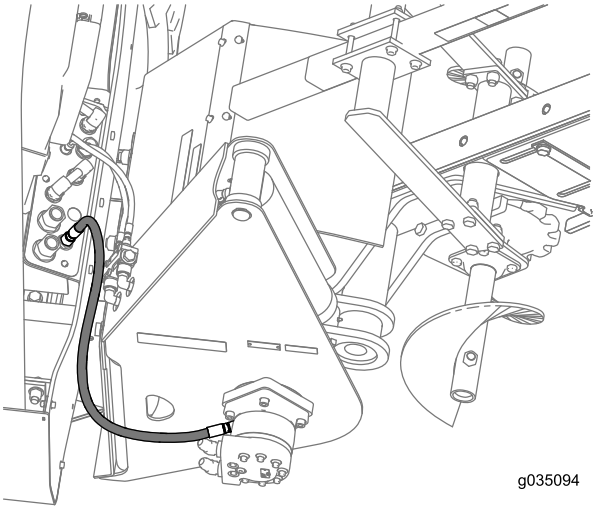




**1x**

**88 cm (34-1/2 inches)**

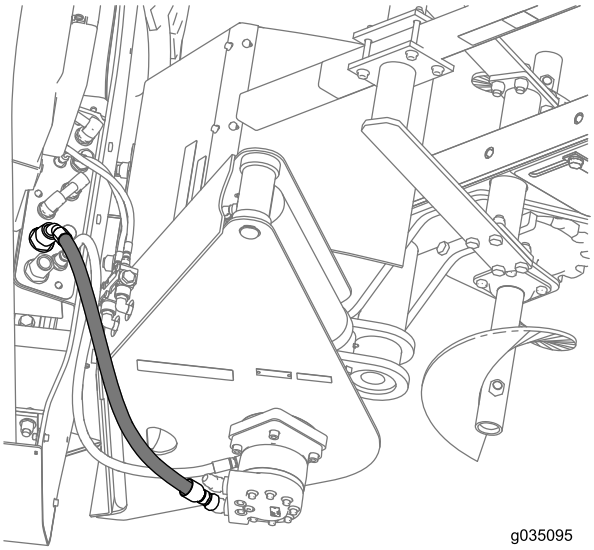



**1x**

**75 cm (29-1/2 inches)**

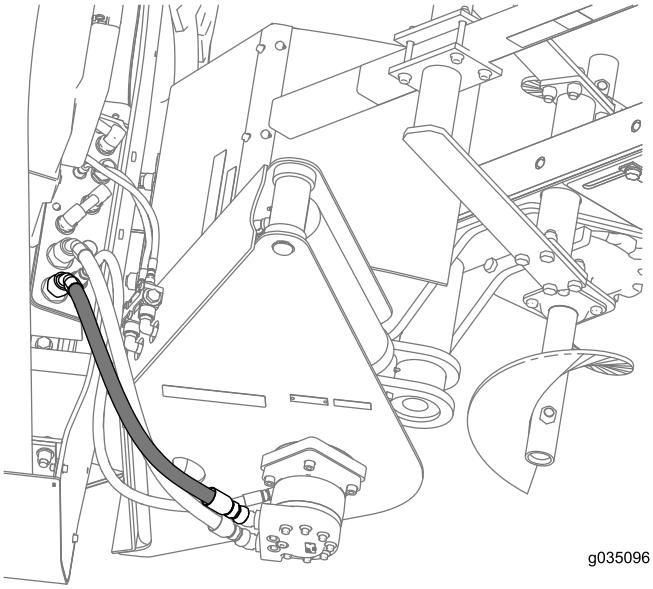


**Testing the hoses**

1. Start the machine; refer to the traction unit *Operator's Manual*.
2. Operate the trencher-chain direction control and the attachment control (located on the right side of the operator seat) in both directions several times to bleed the air from the hydraulic motor and the hydraulic lift cylinder.

   **Note:** The trencher-chain direction control rotates the hub forward and rearward, and the attachment control raises and lowers the boom-mount fitting. Have another person observe the hub and the boom-mount fitting as they move. Move each of the controls in both directions until the hub and the boom-mount fitting move smoothly in both directions.

# Installing the Boom

## Assembling and Installing the Boom-End Cylinder

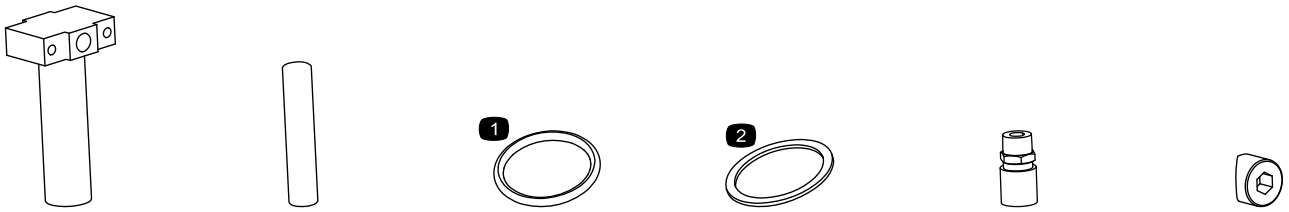


**1x** | **1x** | **1x** | **1x** | **1x** | **1x**

**O-ring**

**Washer (3/16 x 1-3/4 inches)**

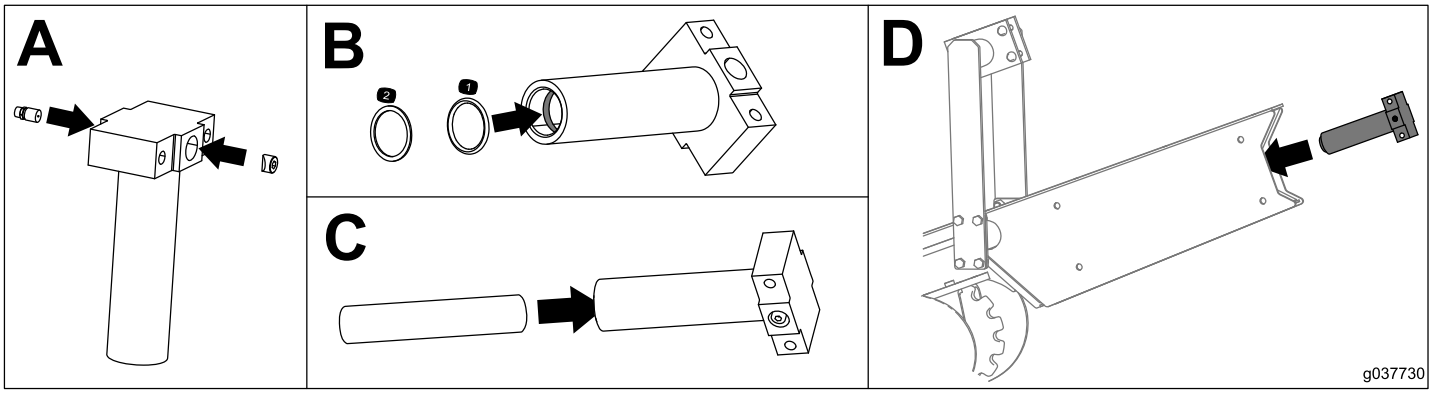

## Installing the Boom Plates



**2x**

**Long boom plates**

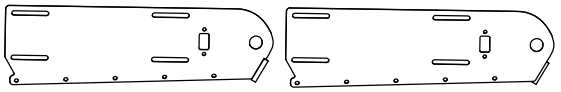

**2x**

**Short boom plates**

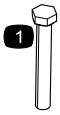


**4x**

**(5/8 x 4-1/2 inches)**

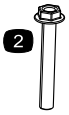


**2x**

**(M12)**



**2x**

**(M12)**

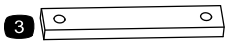


**2x**

**Thick bar clamp**

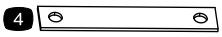


**2x**

**Thin bar clamp**

Place thread locking adhesive on 4 bolts (5/8 x 4-1/2 inches) and install them as shown.

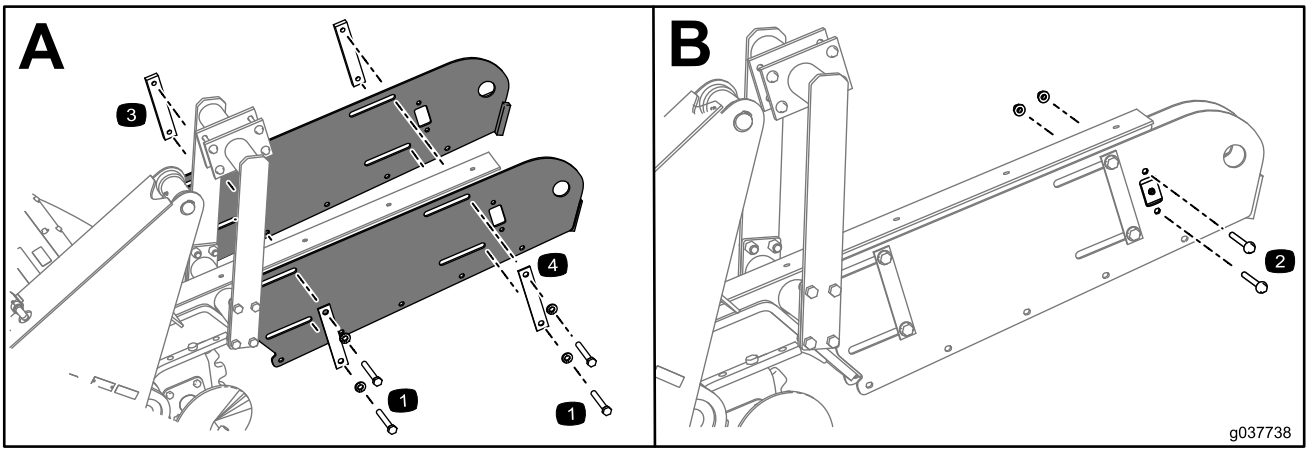

## Installing the Wear Pad Channel

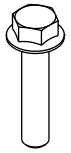



**10x (short boom)** **14x (long boom)** **1x**

**(M10)**

Apply thread-locking adhesive to the bolts (M10) and secure the wear-pad channel onto the boom.

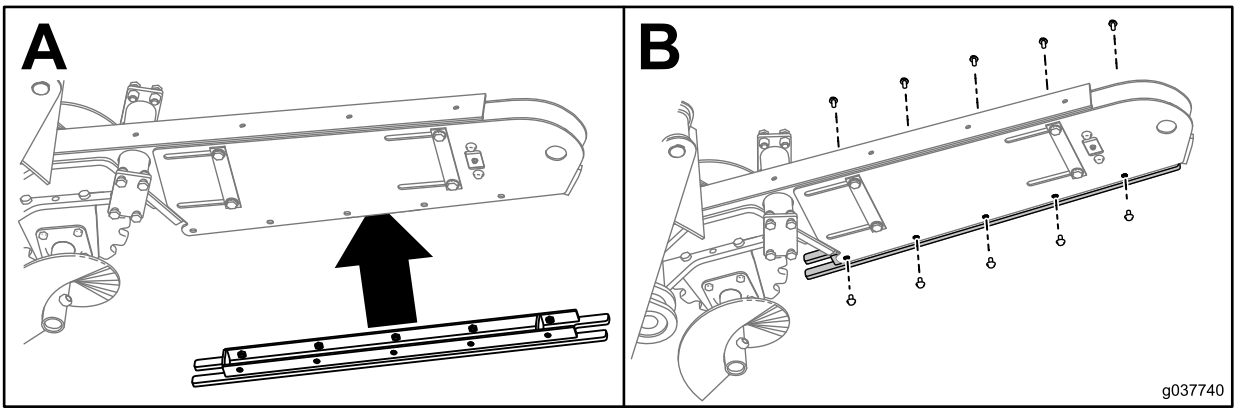


Short boom shown

## Installing the Boom-Roller Assembly

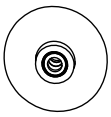

**1x**



**2x**



**1x**



**1x**



**1x**

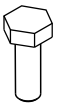

**1x**
**(3/4 x 1-1/2 inches)**

1. Add grease to the washers and ensure that the washers are flush with the roller surface when installing.
2. Install the boom pin through the boom-roller assembly being careful to center the cone spacers before sliding the pin through.
3. Apply thread-locking adhesive to the bolt and torque to 230 to 258 N·m (170 to 190 ft-lb).
4. After the assembly is installed, apply grease to the boom end roller slowly while rotating the roller until the grease is purged from the roller.

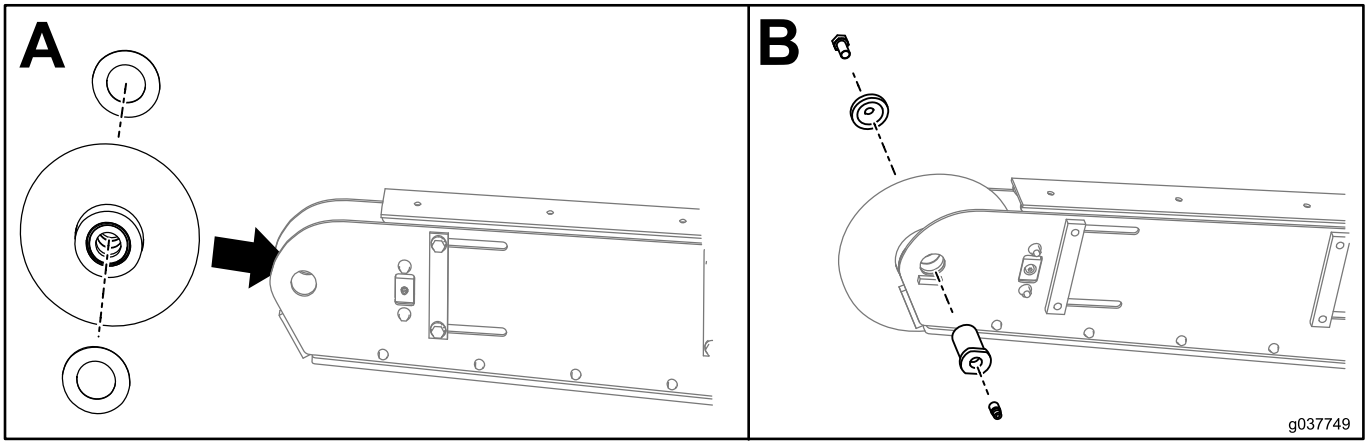


## Installing the Shield Extension (Long Boom Only)

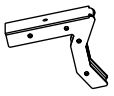

**1x**

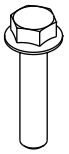

**8x**
**(M10)**

Apply thread-locking adhesive to the bolts (M10) and secure the shield extension onto the boom assembly.

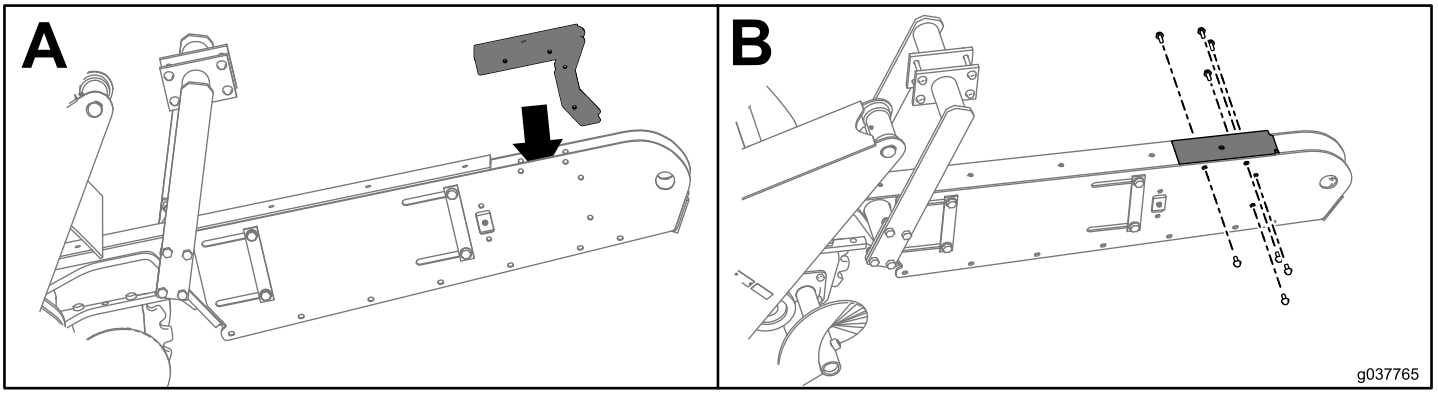

## Installing the Wear Pads and Restraint Bar

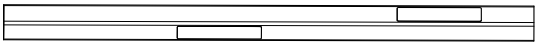

1x

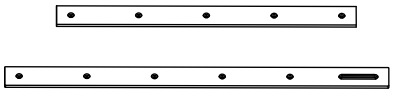

**1x**

**Wear pad (short and long shown)**

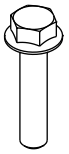

**5x (short boom)** **6x (long boom)**

**(M10)**

Apply thread-locking adhesive to the bolts (M10) and secure the wear pad onto the boom assembly.

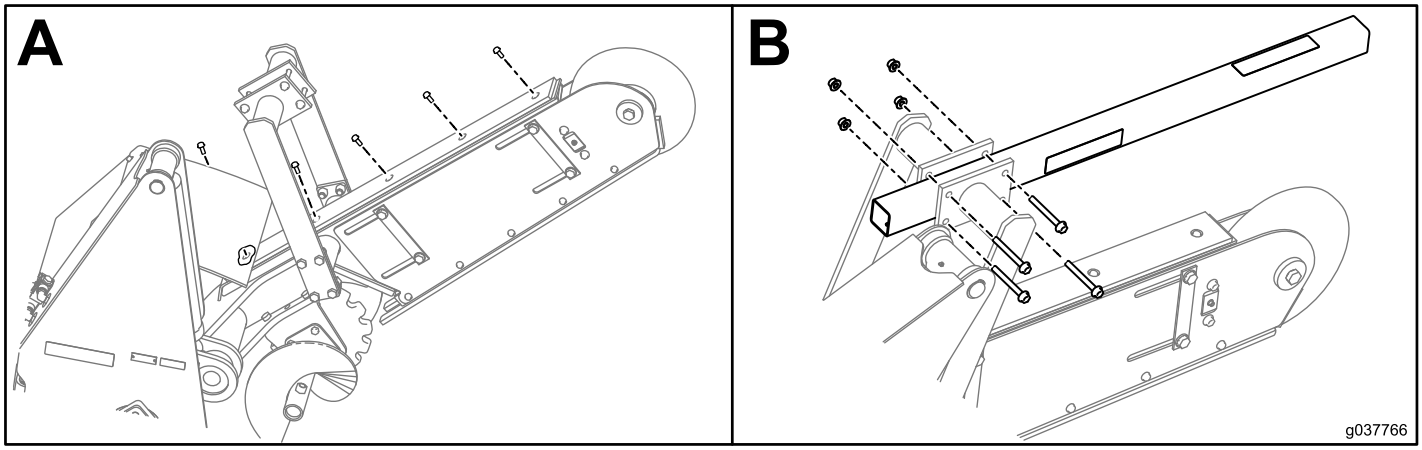


Short boom shown

---

## Torquing the Hardware

**Bolts (M10)**

**48 to 60 N·m**
**65 to 81 ft·lb**

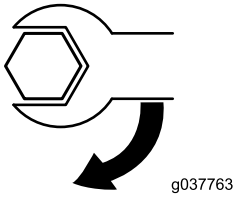


**Bolts (M12)**

**83 to 103 N·m**
**112 to 140 ft·lb**

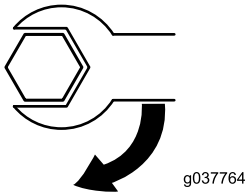


# Installing the Digging Chain

Refer to Installing the Digging Chain (page 24).

# Operation

## Selecting the Proper Components for the Trencher

Using the correct trencher components helps to increase the trenching speed and extending the life of the trencher. Contact an Authorized Toro Service Dealer for more information on parts for your trencher.

### Selecting the Proper Chain

It is important to have the correct chain for the job. The soil conditions will determine the type of chain that has the strength and tension that you need. A chain that is too light wears fast or breaks; a chain that is too heavy increases the load on the machine and reduces the trencher digging speed; however, a heavy chain has a longer wear life than a lighter chain.

You can configure the trencher with an anti-backflex digging chain that is designed for hard digging conditions or a welded H-plate chain for extreme conditions. The side plates of the anti-backflex digging chain are close together. As the chain leaves the sprocket, each link comes together and forms a solid digging channel. This action keeps each tooth at the correct digging angle. The welded H-plate chain is for digging in the most extreme conditions.

**Important: Maintain the correct chain tension. If the chain is too tight or too loose, the digging efficiency decreases and the parts wear more quickly. Refer to Checking the Chain Tension (page 18).**

**Note:** Trencher chains are rated by their tensile strength; for example, a 34 019 kg (75,000 lb) chain takes a minimum of 34 019 kg (75,000 lb) of pull to break the chain.

Select the chain type; choose either a anti-backflex chain or a welded H-plate chain (Figure 20 and Figure 21).

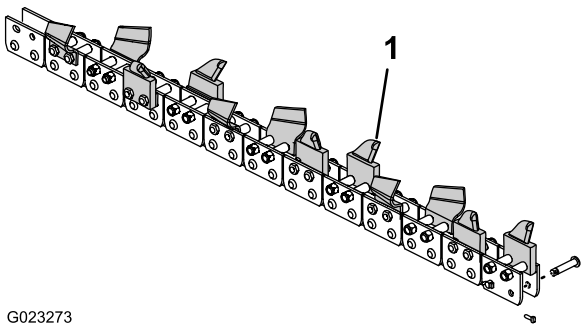


**Figure 20**

1. Anti-backflex chain

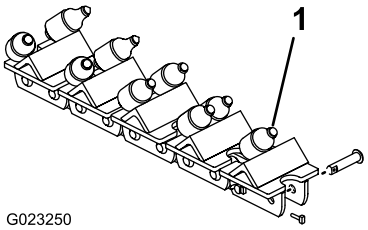


**Figure 21**

1. H-plate chain

### Selecting the Proper Digging Teeth

The most important component of the trencher are the digging teeth; the type of teeth that you select and the arrangement of teeth that you use greatly affects the digging efficiency and tooth wear.

- Choose the teeth type:
  - cupped teeth
  - rock/frost bit
  - shark teeth
  - cupped teeth and rock/frost bit combination
  - cupped and shark teeth combination
- Choose the tooth arrangement width:
  - 152 mm (6 inch)
  - 203 mm (8 inch)

#### Types of Digging Teeth

The types of digging teeth are as follows:

- **Cupped teeth (Figure 22)** are the best for cutting through light to medium soil. The cupped design of the tooth cuts through the soil and then moves it up and out of the trench.

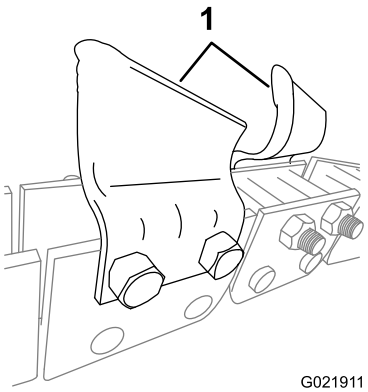


**Figure 22**

1. Cupped teeth

- **Rock and frost teeth** (Figure 23) or **shark teeth** (Figure 24) are best for cutting ground that is very hard, rocky, or frozen; it is also used for cutting through asphalt.

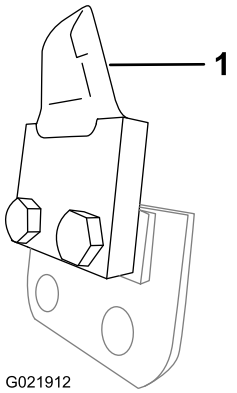


**Figure 23**

1. Shark tooth

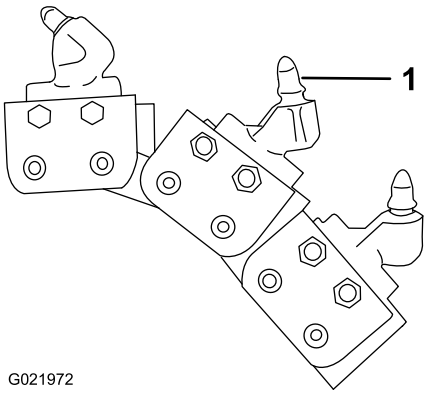


**Figure 24**

1. Rock and frost tooth

**Arrangements of the Digging Teeth**

The arrangement of digging teeth involves both where and how each tooth is attached to the digging chain. Use the following guidelines when you select the arrangements of teeth:

- Install teeth that are the same width and are spaced equally around the chain.
- Use fewer teeth on the chain when you are operating the trencher in wet clay or gumbo.
- Use more teeth on the chain when you are operating the trencher in sandy loam or rocky ground.

**Note:** You can use different types and combinations of teeth to increase productivity in various digging conditions. The rock and frost teeth or the shark teeth penetrate the soil well, and the cupped teeth help to remove the soil. Try several combinations to determine the one best suited for your site.

## Combinations of Boom, Chain, and Teeth for Various Soil Types and Conditions

| Soil Type | Chain Type | | Digging Teeth Type | | | |
|---|---|---|---|---|---|---|
| | Heavy Duty Anti-backflex | H-Plate | Cup Cutter | Rock/Frost Mining Bit | Shark | Mixed |
| Sand | | | X | | | |
| Sandy Loam | | | X | | | |
| Loose Shale | | | X | | | X |
| Topsoil | | | X | | | |
| Caliche (Hard) | X | | X | X | X | X |
| Clay (Gumbo) | X | | X | | | |
| Coral | X | X | | X | X | |
| Rock (Loose) | X | X | | X | X | |
| Asphalt | X | X | | X | X | |
| Hard Clay | X | X | | X | X | X |
| Frozen Soil | X | X | | X | X | X |

**Note:** You need a rock wheel to cut solid rock or concrete.

# Using the Trencher

## Checking the Tooth-mounting Bolts

**Service Interval:** Before each use or daily

Check the mounting bolts of all the chain teeth (Figure 25), and tighten the bolts as needed.

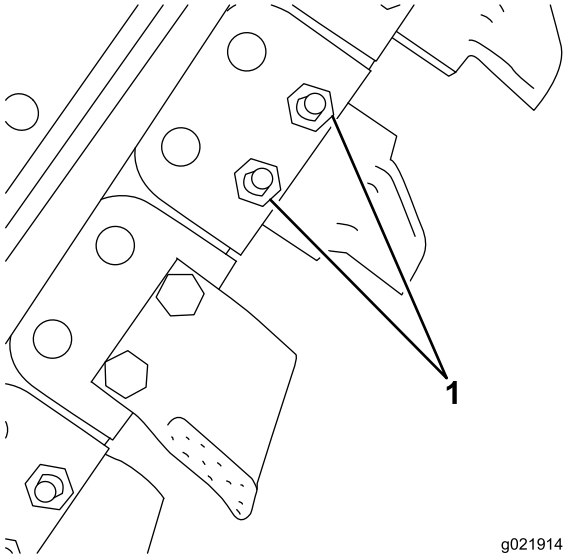


**Figure 25**

1. Mounting bolts

## Positioning the Seat for Trenching

Fasten the seat belt and rotate the seat to the trenching position.

**Note:** You must be seated in the operator's seat before moving the machine; otherwise, the engine stops in 1 second.

## Using the Trencher Controls

- Move the rear attachment speed control lever forward to actuate the digging chain in the forward direction.
- Move the lever further forward to increase the chain speed.
- Move the lever further rearward to decrease the chain speed.

  Move the control to the NEUTRAL position (A) to stop the chain; move the control lever rearward (B) to reverse the chain direction.
- To lower the trencher boom to the desired depth, push the attachment control lever away from you; to raise the trencher boom, pull the control lever toward you. When you release the control lever, it will return to the NEUTRAL position automatically.

## Positioning the Boom for Trenching

For the best trenching performance and the smoothest machine operation, the boom must be in the full down trenching position (Figure 26). Having the boom in this position pulls the machine down for better traction. The ground drive simply pulls the trencher teeth into the face of the trench.

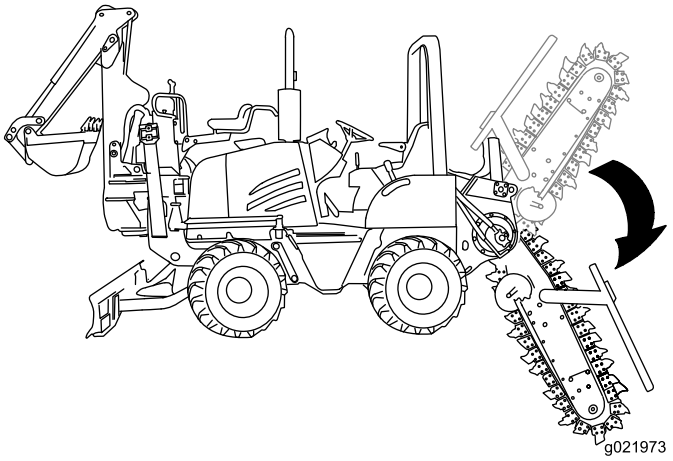


**Figure 26**

When you raise the boom from the full down position, the trenching load pulls the machine rearward. This pulling reduces the traction and may cause the machine to bounce and pull when the chain contacts roots or rocks. The rearward pull of the trenching operation also works against the ground drive, causing the engine to work harder.

## Starting a Trench

**Important: Know the location of all underground utilities before operating the machine on the work site.**

1. Ensure that all persons are away from the machine before you start the engine and while you are trenching.
2. Start the engine; refer to the traction unit *Operator's Manual*.
3. Run the engine at 1/4 throttle until the engine reaches the operating temperature.
4. Move the crumber (if equipped) to the Transport position (Figure 27).

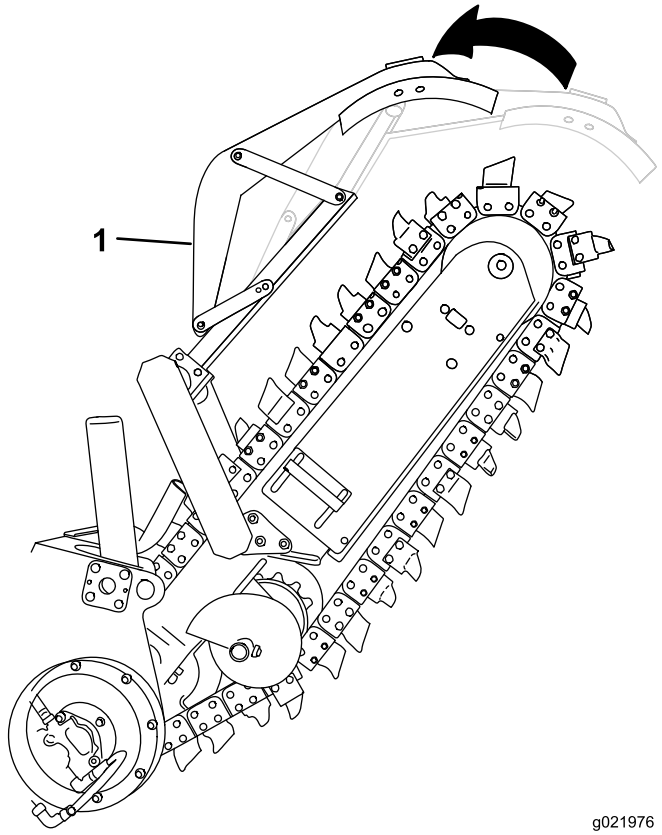


**Figure 27**

1. Crumber bar (optional)

5. When the engine has reached the operating temperature, move the machine to the work area and position the machine to cut the trench.

   **Note:** Ensure that the end of the trencher boom is several feet beyond the starting point of the trench.

6. Align the machine to the center line of the new trench.
7. Adjust the engine speed to the Full throttle position, and lower the boom to just above the ground.
8. Start the digging chain by moving the rear attachment control lever toward the front of the machine.

   **Note:** You must be seated in the operator seat before moving the machine; otherwise, the engine stops in 1 second.

   **Note:** The crumber (if equipped) automatically moves from the TRANSPORT position into the OPERATING position when the trencher attachment reaches the maximum dig depth.

9. Move the utility-traction lever forward until the machine starts to move forward.
10. Lower the boom into the ground.
11. When the digging chain is lowered to the desired depth, move the utility-traction lever forward until the engine speed decreases about 10% (200 to 300 rpm).

    **Note:** Remember that speed on the tachometer.

12. Decrease the digging chain speed and look at the tachometer.

    **Note:** If the engine speed increases, push the utility-traction lever forward until the engine speed is the same that in step 11. Repeat this step to obtain the best trenching speed.

    **Note:** Some hard soil conditions allow you to dig a trench faster by reducing the chain speed.

**⚠ WARNING**

**Operating a trencher attachment without a restraint bar or a crumber could result in server personal injury or death if the chain breaks.**

**Do not operate a trencher attachment without a restraint bar.**

**Note:** The trencher operates best when the engine is at full throttle. Adjust the ground speed to keep from lugging the engine.

**Important: All steering should be gradual. Do not make sharp turns with the boom in the ground. Marking sharp turns while digging with the trencher will damage the trencher.**

**Note:** Check the chain tension when you are starting a new trench in each location; refer to Checking the Chain Tension (page 18).

## Cutting a Curved Trench

**Important: Do not make sharp turns with the boom in the ground. Marking sharp turns while digging with the trencher will damage the trencher.**

You can make a gradual curve by using the rear-wheel steering control only as needed to slightly articulate the machine. Do not make steering corrections, as this will swing the boom into the side of the trench and undercut it.

## Straightening a Crooked Trench

As the trencher is digging, it may vary slightly from a straight line; this can occur if you are digging too quickly for the soil conditions. To straighten the trench, raise the boom, reverse the ground travel and move the trencher forward until the digging chain clears the trench. Correct the alignment of the trencher to the trench and lower the boom.

## Finishing the Trench

1. When you complete the trench, stop the machine.
2. Slowly raise the boom until it is out of the trench about 15 cm (6 inches).
3. Move the attachment ground speed control lever to the NEUTRAL (disengaged) position to stop the digging chain.

4. Pull the attachment lift lever back to the RAISE position until the boom is in the TRANSPORT position.
5. Move the throttle to the IDLE position, shut off the engine, and remove the key.

# Operating Tips

- Clean the area of trash, branches, and rocks before trenching to prevent damaging the equipment.
- Always select the shortest boom, the lightest chain, and the lightest teeth to handle the job. In hard digging conditions, select a high tensile-strength chain, a rock boom, and an anti-backflex chain with rock and frost teeth.
- Always begin trenching with the slowest ground speed possible. Increase the trenching speed if conditions permit. If the chain speed slows down, reduce the ground speed to keep the chain moving at its fastest rate. Do not spin the wheels while trenching.
- Always use full throttle (maximum engine speed) when trenching.
- Always trench while the machine is moving in the forward direction.
- Trench with the chain at a 45- to 60-degree angle for best results.
- You can dig a trench faster by controlling the depth and adjusting the boom periodically.
- If the trencher binds in the soil, reverse the chain direction. Once the chain is loose, change chain directions and continue trenching.
- If you need the finished trench to be cleaner than what is possible with the trencher, you can purchase a crumber from an Authorized Toro Service Dealer. The crumber, which mounts onto the restraint bar, scrapes the trench clean as you dig.
- If the digging speed of the trencher is too slow or too fast, adjust it.
- Use the correct chain for the ground conditions; refer to Selecting the Proper Chain (page 13).
- To obtain maximum digging efficiency from the trencher, always keep good sharp teeth at the necessary spaces. As teeth become worn, replace them immediately.
- Some ground conditions may require a faster chain speed. Move the chain speed control further forward from the NEUTRAL position. You can reduce the life of the digging chain by using it at higher chain speeds for an extended time.

# Maintenance

## Greasing the Trencher

**Service Interval:** Every 50 hours

1. Clean the grease fittings with a rag.
2. Connect the grease gun to the grease fitting for the bearing of the lower lift cylinder, and apply 3 pumps of grease to the fittings (Figure 28, Figure 29, and Figure 30).
3. Wipe up any excess grease.

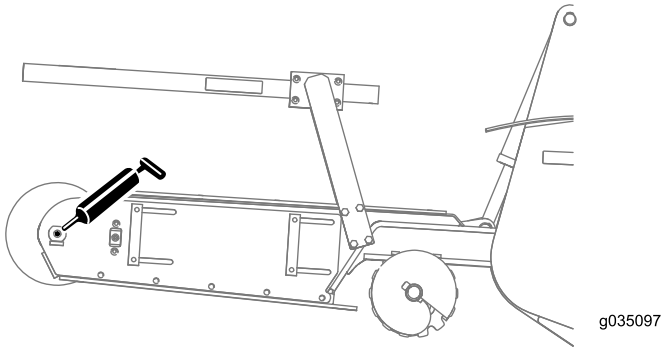


**Figure 28**

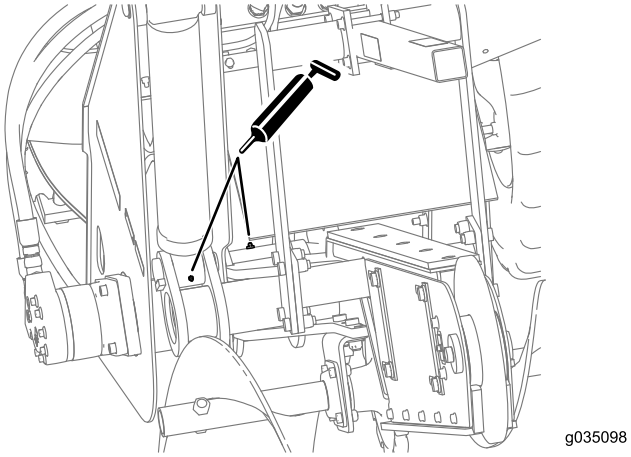


**Figure 29**

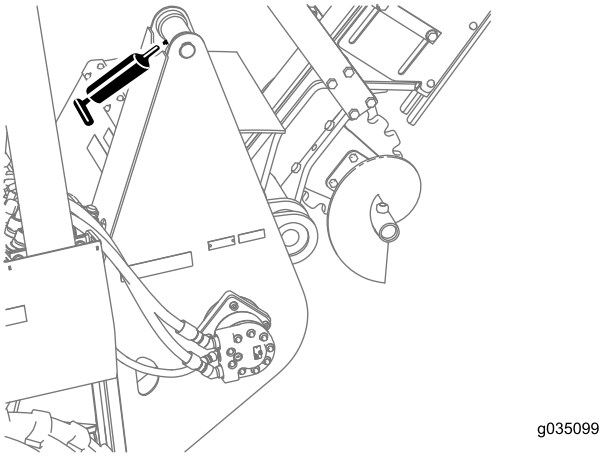


**Figure 30**

# Servicing the Trencher Digging Chain

## Checking the Chain Tension

**Service Interval:** After the first 10 hours

Before each use or daily

1. Start the engine.
2. Make a trench about 3 m (10 ft) long.
3. Stop the trencher chain and lift the boom out of the trench.
4. Move the boom to the horizontal position (Figure 31).

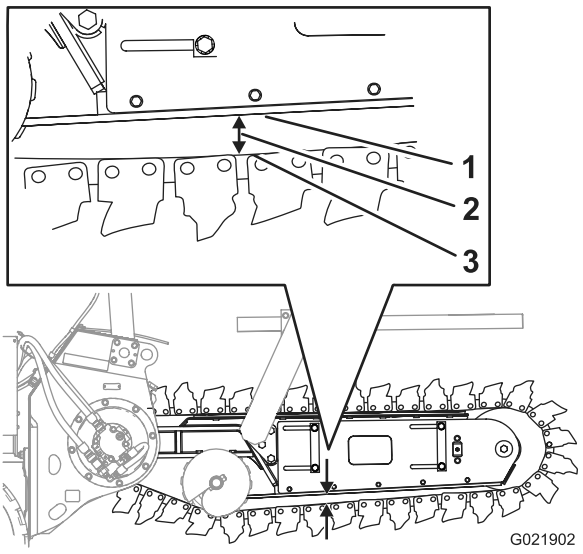


**Figure 31**

1. Lower wear strip
2. 51 to 76 mm (2 to 3 inch) gap
3. Chain

5. Shut off the engine and remove the key.

6. Measure the distance between the chain and the bottom of the lower wear strip (Figure 31).
   - If the gap between the lower wear strip and the chain is 51 to 76 mm (2 to 3 inch), the chain tension is correct (Figure 31).
   - If the gap is **smaller** that 51 mm (2 inch), the chain tension too tight; refer to Decreasing the Chain Tension (page 19).
   - If the gap is **larger** that 76 mm (3 inch), the chain tension too loose; refer to Increasing the Chain Tension (page 20).

   **Note:** The chain tension has a significant affect on the productivity of the machine; set the chain tension as loose as possible.

## Decreasing the Chain Tension

**⚠ WARNING**

**If you remove the grease fitting from the boom before you release the pressure in the system, personal injury may result.**

**Before removing the grease fitting, loosen (but do not remove) the plug on the opposite side of the boom.**

1. At the left side of the boom, loosen the 4 bolts that secure the lock bars and the side plates (Figure 32).

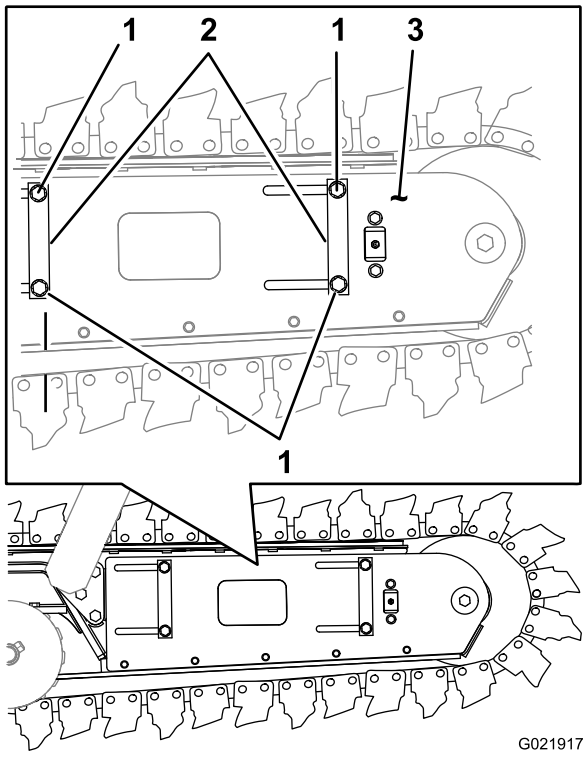


**Figure 32**

1. Bolt
2. Lock bars
3. Side plate

2. Locate the bleed plug (hex-socket) at the side plate on the right side of the boom (Figure 33).

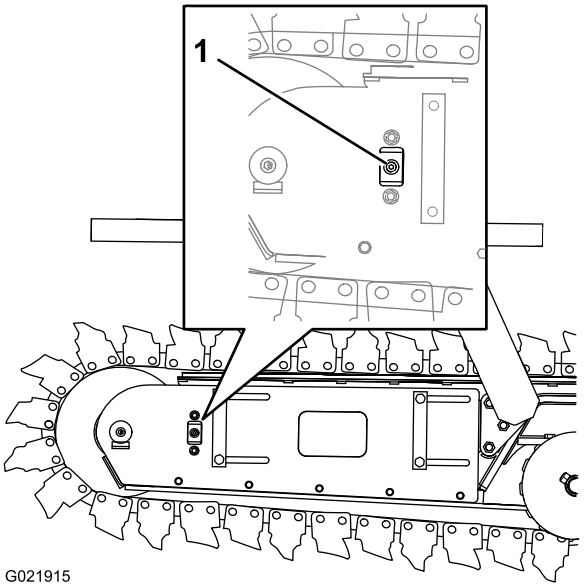


**Figure 33**

1. Bleed plug

3. Slowly rotate the bleed plug counterclockwise 2 or 3 revolutions, and allow the grease to flow from around the plug (Figure 33).

   **Note:** The chain tension will decrease as the gap between the chain and the wear strip increases.
4. When you achieve a 51 to 76 mm (2 to 3 inch) gap between the chain and the wear strip, tighten the plug (Figure 32 and Figure 33).
5. Torque the 4 bolts (Figure 32) that secure the lock bars and the side plates to 190 to 215 N-m (140 to 159 ft-lb).
6. Perform the steps in Checking the Chain Tension (page 18).

## Increasing the Chain Tension

**⚠ WARNING**

**If you remove the grease fitting from the boom before you release the pressure in the system, personal injury may result.**

**Before removing the grease fitting, loosen (but do not remove) the plug on the opposite side of the boom.**

Grease Type: Lithium-based grease

1. Locate the cap for the grease fitting at the side plate on the left side of the boom (Figure 34).

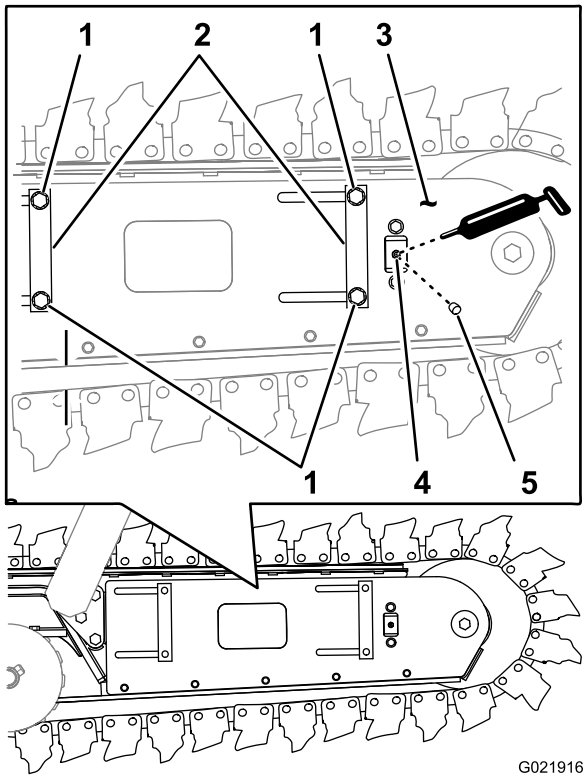


**Figure 34**

1. Bolt
2. Lock bar
3. Side plate
4. Grease fitting
5. Dust cap

2. Clean the area around the dust cap with a cleaning solvent (Figure 34).
3. Use a needle-nose pliers to rotate the dust cap counterclockwise and remove the cap from the grease fitting (Figure 34).
4. Loosen the bolts that secure the lock bars and the side plates on the left side of the boom (Figure 32).
   - 4 bolts for the short boom (Figure 34)
   - 5 bolts for the large boom (Figure 35)

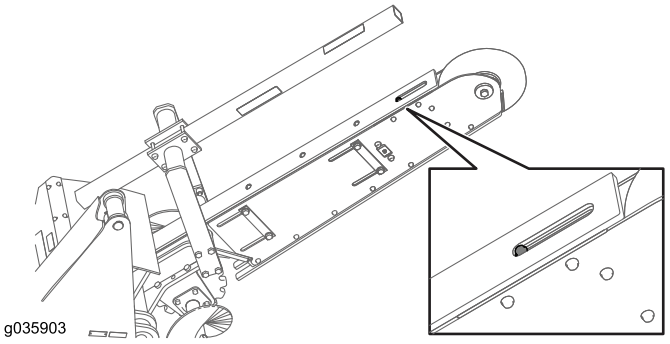


**Figure 35**

5. Connect a grease gun with the specified grease to the grease fitting.
6. While observing the chain gap, pump the grease gun until the gap between the wear strip and the chain is 51 to 76 mm (2 to 3 inches); refer to Figure 31.
7. Remove the grease gun from the fitting and install the dust cap.
8. Torque the 4 bolts (Figure 32) that secure the lock bars and the side plates to 190 to 215 N-m (140 to 159 ft-lb).
9. Perform the steps in Checking the Chain Tension (page 18).

## Torquing the Fasteners on the Chain Drive Sprocket

**Service Interval:** After the first 10 hours

After the first 25 hours

Torque the 8 studs and nuts that secure the sprocket for the digging chain to the planetary drive housing to 109 to 314 N·m (81 to 99 ft-lb); refer to (Figure 36).

**Note:** The torque specifications are for dry threads only.

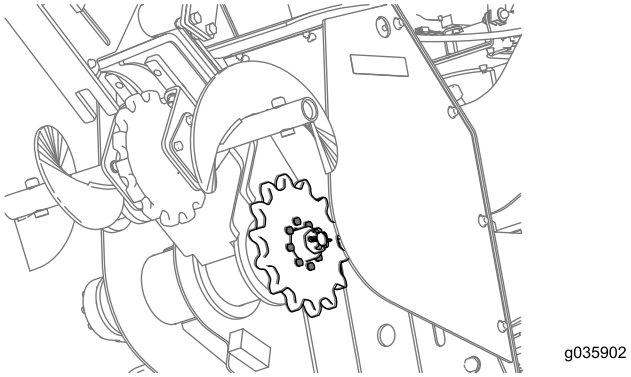


**Figure 36**

## Checking the Trencher Chain Wear Strip and Wear Channel

**Service Interval:** Before each use or daily

1. Lift the chain at the wear strip at the top of the boom, and check the wear strip for signs of damage or excessive wear (Figure 37).

   **Note:** If the wear strip is worn through to the frame of the boom, replace the wear strip; refer to Replacing the Trencher Chain Wear Strip (page 22).

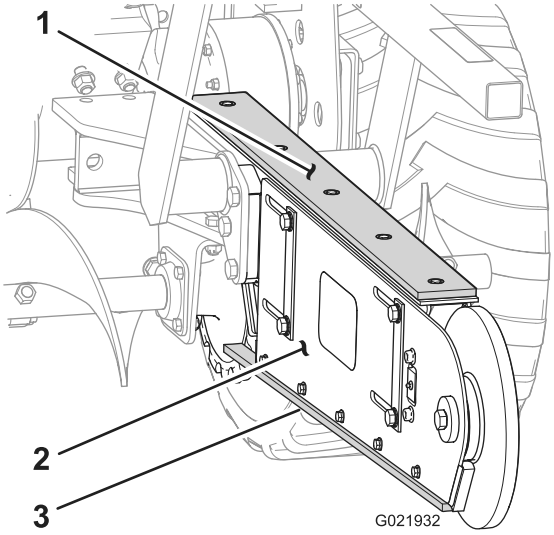


**Figure 37**

The digging chain has been removed for clarity.

1. Wear strip
2. Boom
3. Wear channel

2. Check the wear channel at the bottom of the boom for signs of damage and excessive wear (Figure 37).

   **Note:** If the wear channel is worn through to the bracket of the channel, replace the wear channel; refer to Replacing the Trencher Wear Channel (page 22).

## Replacing the Trencher Chain Wear Strip

1. Loosen the trencher chain; refer to Decreasing the Chain Tension (page 19).
2. Lift the chain at the top of the boom, and install blocks between the chain and the boom (Figure 38).

   **Note:** Supporting the chain at the bottom of the boom helps by lifting the chain above the wear strip.

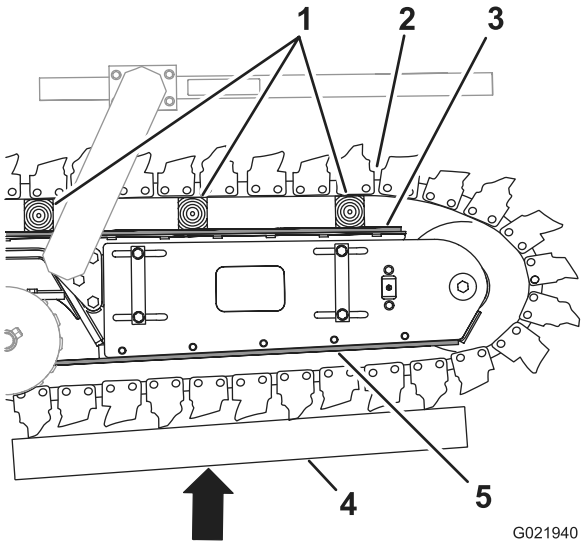


**Figure 38**

1. Blocks
2. Digging chain
3. Wear strip
4. Support
5. Wear channel

3. Remove the 5 bolts that secure the wear strip to the top of the boom (Figure 39).

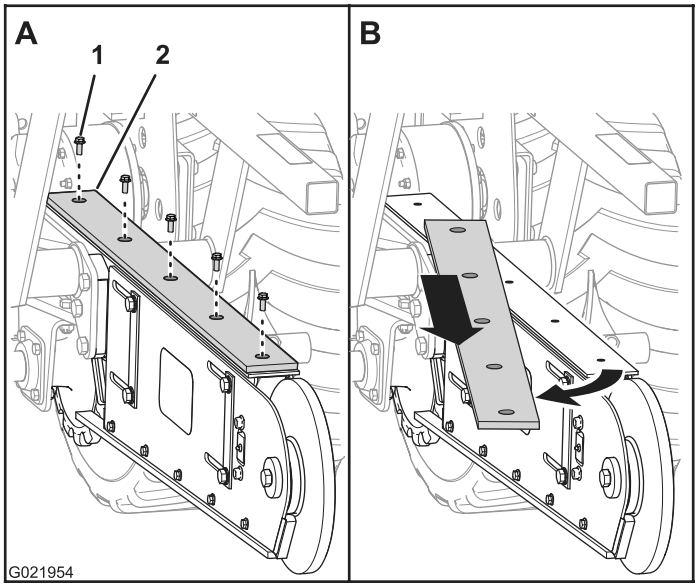


**Figure 39**

The digging chain has been removed for clarity.

1. Bolt
2. Wear strip

4. Remove the wear strip (Figure 39).
5. Clean the threads of the bolts.
6. Apply medium-grade (service removable) thread-locking compound to the threads of the bolts.
7. Align the holes of the new wear strip with the holes in the top of the boom (Figure 39).
8. Secure the wear strip to the top of the boom with the bolts that you previously removed (Figure 39).
9. Remove the wood blocks and lower the chain onto the boom.
10. Adjust the chain tension of the trencher; refer to Checking the Chain Tension (page 18).

## Replacing the Trencher Wear Channel

1. Loosen the trencher chain; refer to Decreasing the Chain Tension (page 19).
2. Remove the 10 bolts that secure the wear channel to the bottom left and bottom right sides of the boom (Figure 40).

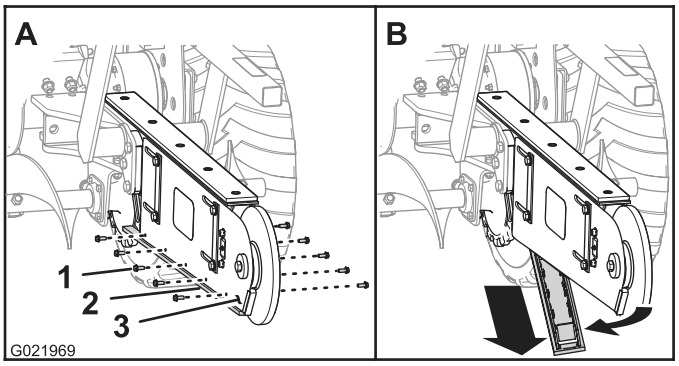


**Figure 40**

The digging chain has been removed for clarity.

1. Bolt
2. Wear strip
3. Boom

3. Remove the trencher wear channel (Figure 40).
4. Clean the threads of the bolts.
5. Apply medium-grade (service removable) thread-locking compound to the threads of the bolts.
6. Align the holes of the new wear channel with the holes in the bottom left and bottom right sides of the boom (Figure 40).
7. Secure the wear channel to the bottom of the boom with the bolts that you previously removed (Figure 40).
8. Adjust the chain tension of the trencher; refer to Checking the Chain Tension (page 18).

# Replacing the Digging Chain

## Removing the Digging Chain

### Preparing to Remove the Digging Chain

1. Start the machine and move the boom to the full up position.
2. Rotate the digging chain until the master pin is positioned at the top of the idler wheel of the boom (Figure 42).
3. Turn the machine off, and remove the key.
4. Remove the bleed plug from the chain tensioner of the boom; refer to Checking the Chain Tension (page 18).

   **Note:** The idler wheel of the boom should move forward and down as the chain tension decreases.
5. Install the bleed cap.
6. Start the machine, move the boom to the horizontal position, turn the machine off and remove the key.

### Removing the Master Pin in the Digging Chain

1. Counting from the master pin, loop the lifting strap around the chain at the digging tooth of the fifth or sixth link below and forward of the idler wheel (Figure 41).
2. With the strap attached to the lifting equipment, raise the lifting strap enough to support the digging chain.
3. Clamp the ends of the chain with a with a chain clamp at the link rollers at either side of the inner and outer plates at the master pin (Figure 41).

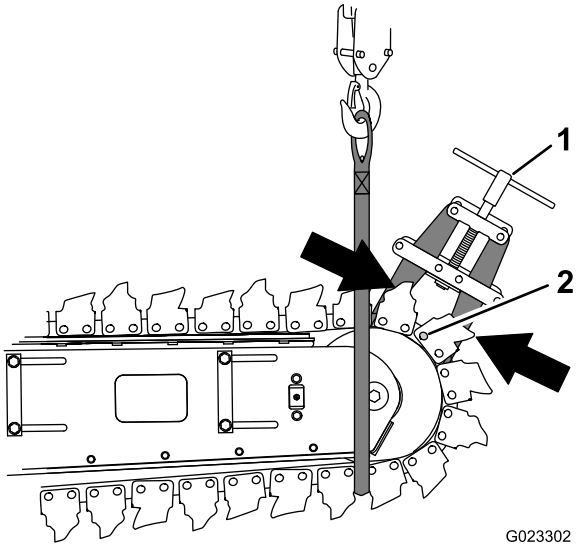


**Figure 41**

1. Chain clamp
2. Master pin hole

4. Straighten or cut off the tail of the safety pin and remove the pin (Figure 42).

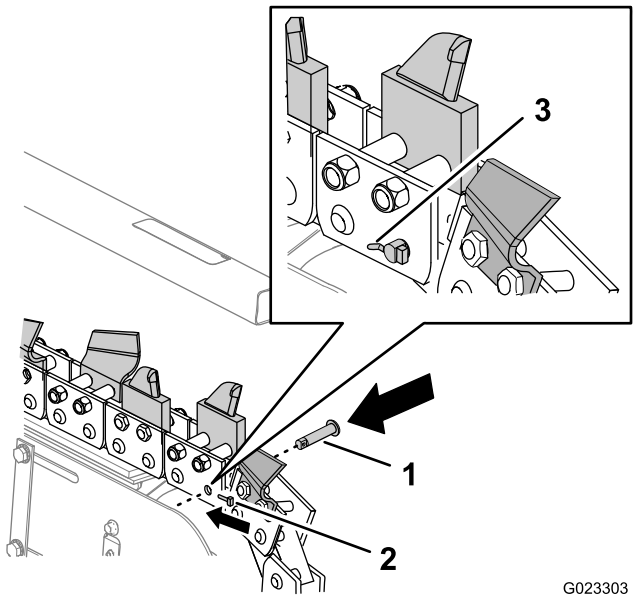


**Figure 42**

1. Master pin
2. Safety pin
3. Safety pin (bent 30° to 45°)

**Note:** Discard the safety pin.

5. Remove the master pin and the roller for the master pin (Figure 42).

   **Note:** Retain the master pin and the roller for installing the replacement chain.

### Removing the Digging Chain from the Machine

1. Lower the lifting equipment until the end of the digging chain is laying on the ground (Figure 46).
2. Remove the lifting strap.
3. Start the machine and lower the boom until the bottom idler wheel is positioned 31 to 36 cm (12 to 14 inches) above the ground (Figure 43).

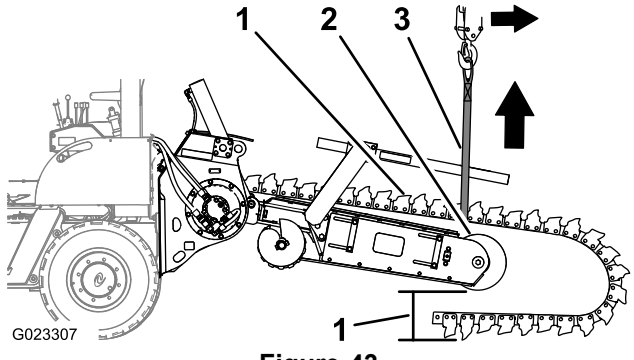


**Figure 43**

1. Digging chain
2. Idler wheel
3. Lifting strap
4. Clearance 31 to 36 cm (12 to 14 inches)

4. Start the machine and move the trencher drive control to the slow forward chain speed position.

5. When the digging chain has cleared the drive sprocket, move the trencher drive control to the NEUTRAL position, turn the machine off, and remove the key (Figure 43).
6. Wrap the lifting strap around the digging chain at the idler wheel, and attach the strap to the lifting equipment (Figure 43).
7. Raise the lifting equipment and remove the digging chain from the boom (Figure 43).

# Installing the Digging Chain

### Preparing to Install the Digging Chain

1. Start the machine and move the boom to the full up position.
2. Set the parking brake, turn the machine off, and remove the key.
3. Remove the bleed plug from the chain tensioner of the boom; refer to Checking the Chain Tension (page 18).
4. Move the idler wheel of the boom forward and down.
5. Install the bleed cap.
6. Start the machine, move the boom to the horizontal position, turn the machine off, and remove the key.
7. Lay the digging chain on the ground in a straight line, below the lifting equipment such as a hoist, and with the cutting face of the teeth pointing toward the path where you will move the machine (forward) to position it over the digging chain (Figure 44).

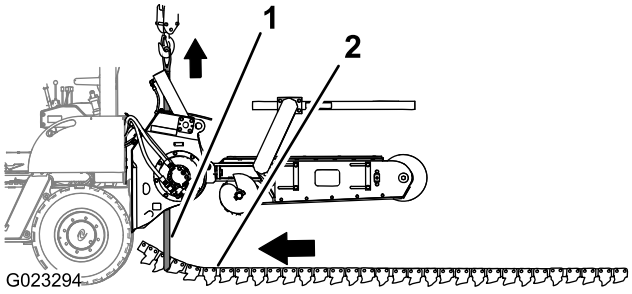


**Figure 44**

1. Lifting strap
2. Digging chain (teeth down and forward)

8. At the forward end of the chain, loop a 3.65 m (12 foot) lifting strap with a lifting capacity of 181.4 kg (400 lb) around the chain at the digging tooth of the third or fourth link of the chain (Figure 44).
9. Start the machine and position it with trencher over the digging chain and with the lifting strap forward of the drive sprocket of the trencher (Figure 44).

   **Note:** When positioned correctly, the boom of the trencher is aligned with the digging chain.
10. Turn the machine off and remove the key.

### Aligning the Digging Chain

This procedure requires 2 people to align the digging chain to the machine.

1. Route the ends of the lifting strap forward of the sprocket hub, on either side of the drive sprocket, and up past the dirt deflector (Figure 45).

   **Note:** Move the dirt deflector up and away from the lifting strap.

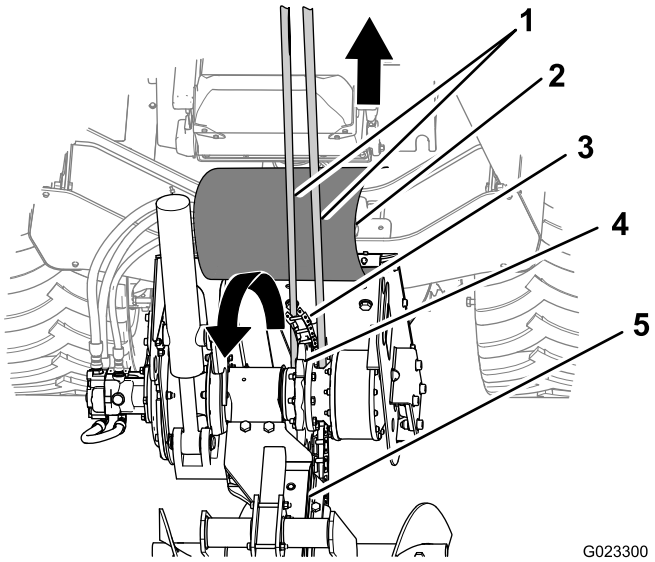


**Figure 45**

1. Lifting strap
2. Dirt deflector
3. Digging chain
4. Drive sprocket
5. Upper wear strip

2. Connect the ends of the lifting strap to the lifting equipment, and raise the end of the chain until the drive pins engage the drive sprocket (Figure 45).
3. Start the machine and move the trencher drive control to the slow forward chain speed position.

   **Important: If the chain is not aligned or engaged with the drive sprocket, turn the machine off, remove the key, and align the chain to the drive sprocket.**

   **Note:** The machine drives the chain onto the upper wear strip of the boom.

   **Note:** Maintain tension on the strap until the end of the chain is on the upper wear strip.
4. Lower the lifting strap as the chain moves around the sprocket and into position on the upper wear strip.
5. Move the trencher drive control to the NEUTRAL position when the end of the chain is positioned on top of the idler wheel of the boom (Figure 46).

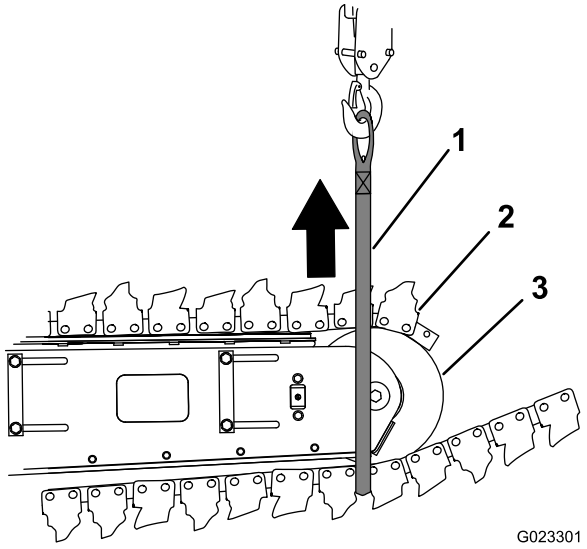


**Figure 46**

1. Lifting strap
2. Digging chain
3. Idler wheel

6. Shut off the machine and remove the key.
7. Remove the lifting strap from the machine.

### Linking the Digging Chain

1. At the end of the chain laying on the ground, loop the lifting strap around the chain at the digging tooth of the fifth or sixth link of the chain (Figure 46).
2. Raise the chain and position it around the idler wheel (Figure 46 and Figure 41).

   **Note:** Rotate the auger as necessary to engage the teeth of auger drive sprocket with the digging chain.
3. Clamp the ends of the chain with a with a chain clamp at the link rollers at either side of the inner and outer plates at the master pin (Figure 41).
4. Align the hole of a link roller with the holes in the inner plates at the end of the chain (Figure 42).
5. Align the holes in the inner plates and the roller of the chain with the holes in the outer plates of the other end of the chain (Figure 42).
6. Align the master pin with the hole in the pin parallel with the chain plates forward of the idler wheel (Figure 42).
7. Insert the master pin through the digging chain plates.
8. Insert the safety pin through the master pin with the head of the pin toward the idler wheel (Figure 42).

   **Important: Do not install a used safety pin. Only use a new safety pin.**
9. Remove the lifting strap and the chain clamp.
10. Bend the tail of the safety pin down 30° to 45° (Figure 42).
11. Adjust the tension of the digging chain; refer to Checking the Chain Tension (page 18).

# Storage

1. Before storing the machine, brush off the dirt from the attachment.
2. Check the condition of the digging chain. Adjust and lubricate the chain. Replace any worn or damaged parts.
3. Check and tighten all bolts, nuts, and screws. Repair or replace any part that is damaged or worn.
4. Ensure that all hydraulic couplers are connected together to prevent contaminating the hydraulic system.
5. Paint all scratched or bare metal surfaces with paint available from an Authorized Service Dealer.
6. Store the attachment in a clean, dry garage or storage area. Cover the trencher to protect it and keep it clean.

# Troubleshooting

| Problem | Possible Cause | Corrective Action |
|---|---|---|
| The chain does not turn. | 1. A hydraulic fitting is not completely connected. | 1. Check and tighten all fittings. |
| | 2. A hydraulic fitting is damaged. | 2. Replace the damaged fitting. |
| | 3. There is an obstruction in a hydraulic hose. | 3. Find and remove the obstruction. |
| | 4. An auxiliary valve on the machine is not opening. | 4. Repair the valve. |
| | 5. The boom-end bearing has failed. | 5. Replace the bearing. |
| | 6. The digging chain is too tight. | 6. Adjust the tension on the digging chain. |
| | 7. There is sand buildup in the tooth root of the drive sprocket. | 7. Raise the trencher, run the chain backward, then decrease the chain tension. |
| | 8. The hydraulic motor or the chain drive has failed. | 8. Contact an Authorized Service Dealer. |
| The trencher does not dig fast enough. | 1. The teeth are worn. | 1. Replace any worn teeth. |
| | 2. There is a restriction in a hydraulic hose. | 2. Check the hoses and repair any problems found. |
| | 3. The hydraulic system is too hot. | 3. Shut down the system and allow it to cool. |
| | 4. The relief valve is set below specifications. | 4. Contact an Authorized Service Dealer. |
| The chain turns in the wrong direction. | 1. The hydraulic hoses are reversed. | 1. Disconnect the reversed hoses and install them correctly. |
| The bearing-case lube is contaminated. | 1. The fill plug is leaking. | 1. If there is moisture around the wheel plug, change the oil and replace the plug and the plug O-ring. |
| | 2. The O-ring on the motor has failed. | 2. Contact an Authorized Service Dealer. |
| | 3. The seal has failed. | 3. Contact an Authorized Service Dealer. |

# Notes:

# The Toro Warranty

A Limited Warranty

Underground Equipment

## Conditions and Products Covered

The Toro Company and its affiliate, Toro Warranty Company, pursuant to an agreement between them, jointly warrant your Toro Underground Equipment ("Product") to be free from defects in materials or workmanship. Where a warrantable condition exists, we will repair the Product at no cost to you including diagnostics, labor, and parts.
The following warranty applies from the date the Product is delivered to the original retail purchaser or rental owner.

| Products | Warranty Period |
|---|---|
| Engine Powered Units & Fluid Mixers | 1 year or 1000 operating hours, whichever occurs first |
| All Serialized Attachments | 1 year |
| Rock Hammer | 6 months |
| Engines | Through engine manufacturers: 2 years or 2000 operating hours, whichever occurs first |

## Instructions for Obtaining Warranty Service

You are responsible for notifying the Underground Dealer from whom you purchased the Product as soon as you believe a warrantable condition exists. If you need help locating a Underground Dealer, or if you have questions regarding your warranty rights or responsibilities, you may contact us at:

Toro Customer Care
Toro Warranty Company
8111 Lyndale Avenue South
Bloomington, MN 55420-1196
Toll Free at 855-493-0088 (U.S. Customers)
1-952-948-4318 (International Customers)

## Owner Responsibilities

As the Product owner, you are responsible for required maintenance and adjustments stated in your *Operator's Manual*. Failure to perform required maintenance and adjustments can be grounds for disallowing a warranty claim.

## Items and Conditions Not Covered

Not all product failures or malfunctions that occur during the warranty period are defects in materials or workmanship. This warranty does not cover the following:

- Product failures which result from the use of non-Toro replacement parts, or from installation and use of add-on, or modified non-Toro branded accessories and products. A separate warranty may be provided by the manufacturer of these items.
- Product failures which result from failure to perform recommended maintenance and/or adjustments. Failure to properly maintain your Toro product per the Recommended Maintenance listed in the *Operator's Manual* can result in claims for warranty being denied.
- Product failures which result from operating the Product in an abusive, negligent, or reckless manner.
- Parts subject to consumption through use unless found to be defective. Examples of parts which are consumed, or used up, during normal Product operation include, but are not limited to: brakes, filters, lights, bulbs, belts, tracks or tires, digging teeth, digging booms, digging, drive, or track chains, track pads, drive sprockets, idlers, rollers, blades, cutting edges, or other ground engaging components.
- Failures caused by outside influence. Conditions considered to be outside influence include, but are not limited to, weather, storage practices, contamination, use of unapproved fuels, coolants, lubricants, additives, water, or chemicals, etc.
- Failure or performance issues due to the use of fuels (e.g. gasoline, diesel, or biodiesel) that do not conform to their respective industry standards.
- Normal noise, vibration, wear and tear, and deterioration.
- Normal "wear and tear" includes, but is not limited to, damage to seats due to wear or abrasion, worn painted surfaces, scratched decals, etc.
- Hauling expenses, travel time, mileage, or overtime associated with transporting product to the authorized Toro dealer.

## Parts

Parts scheduled for replacement as required maintenance in the *Operator's Manual,* are warranted for the period of time up to the scheduled replacement time for that part. Parts replaced under this warranty are covered for the duration of the original product warranty and become the property of Toro. Toro will make the final decision whether to repair any existing part or assembly or replace it. Toro may use remanufactured parts for warranty repairs.

## Maintenance is at Owner's Expense

Engine tune-up, lubrication, cleaning and polishing, replacement of filters, coolant, and completing recommended maintenance are some of the normal services Toro products require that are at the owner's expense.

## General Conditions

Repair by an Authorized Toro Underground Dealer is your sole remedy under this warranty.

**Neither The Toro Company nor Toro Warranty Company is liable for indirect, incidental or consequential damages in connection with the use of the Toro Products covered by this warranty, including any cost or expense of providing substitute equipment or service during reasonable periods of malfunction or non-use pending completion of repairs under this warranty. Except for the Emissions warranty referenced below, if applicable, there is no other express warranty. All implied warranties of merchantability and fitness for use are limited to the duration of this express warranty.**

Some states do not allow exclusions of incidental or consequential damages, or limitations on how long an implied warranty lasts, so the above exclusions and limitations may not apply to you. This warranty gives you specific legal rights, and you may also have other rights which vary from state to state.

## Note regarding engine warranty:

The Emissions Control System on your Product may be covered by a separate warranty meeting requirements established by the U.S. Environmental Protection Agency (EPA) and/or the California Air Resources Board (CARB). The hour limitations set forth above do not apply to the Emissions Control System Warranty. Refer to the Engine Emission Control Warranty Statement supplied with your product or contained in the engine manufacturer's documentation for details.

## Countries Other than the United States or Canada

Customers who have purchased Toro products exported from the United States or Canada should contact their Toro Distributor (Dealer) to obtain guarantee policies for your country, province, or state. If for any reason you are dissatisfied with your Underground Dealer's service or have difficulty obtaining guarantee information, contact the Toro importer.

**Australian Consumer Law:** Australian customers will find details relating to the Australian Consumer Law either inside the box or at your local Toro Dealer.