Form No. 3382-315 Rev B

TITAN® Riding Mower

Model No. All Models

Setup Instructions

Setup

Loose Parts

Use the chart below to verify that all parts have been shipped.

Procedure	Description	Qty.	Use
1	No parts required	–	Connect the battery.
2	Rear hitch Bolt (5/16 x 2-1/2 inches) Locknut (5/16 inch)	1 2 2	Install the rear hitch.
3	No parts required	–	Set up the Rollover Protection System (ROPS) bar.
4	No parts required	–	Check the mower adjustment.
5	Ignition key Hose coupling (not included with CE models) Operator's Manual Engine operator's manual Operator training material	1 1 1 1 1	Complete the setup.

Note: Determine the left and right sides of the machine from the normal operating position.

© 2016—The Toro® Company
8111 Lyndale Avenue South
Bloomington, MN 55420

Register at www.Toro.com.

Original Instructions (EN)
Printed in the USA
All Rights Reserved

3382-315 B

1

Connecting the Battery

No Parts Required

Procedure

1. Locate the battery and negative battery cable.
2. Remove the fasteners on the negative battery cable, and use them to secure the negative battery cable to the negative post (Figure 1).

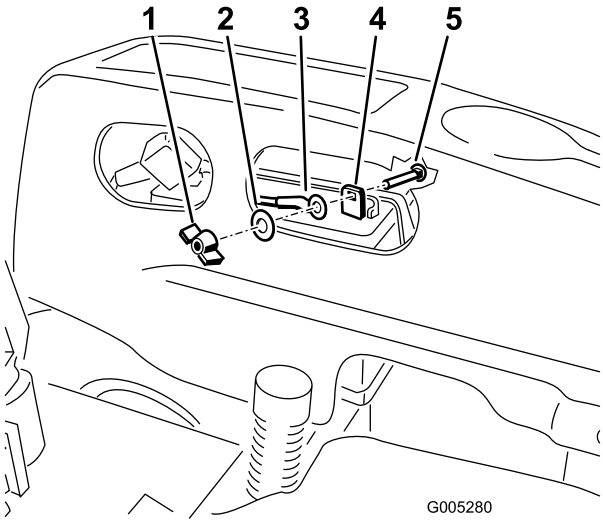

Figure 1

1. Wing nut
2. Washer
3. Negative battery cable
4. Negative battery post
5. Carriage bolt

2

Installing the Rear Hitch

Parts needed for this procedure:

1	Rear hitch
2	Bolt (5/16 x 2-1/2 inches)
2	Locknut (5/16 inch)

Procedure

Use the 2 bolts (5/16 x 2-1/2 inches) to secure the bracket to the frame (Figure 2).

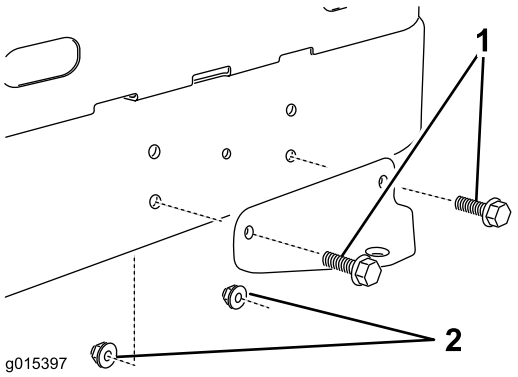

Figure 2

1. Bolts (5/16 x 2-1/2 inches)
2. Locknuts (5/16 inch)

3

Setting up the Rollover Protection System (ROPS) Bar

No Parts Required

Procedure

1. Remove the bolts (1/2 x 3 inches), washers, and nuts from the middle hole on the ROPS plate (Figure 3).

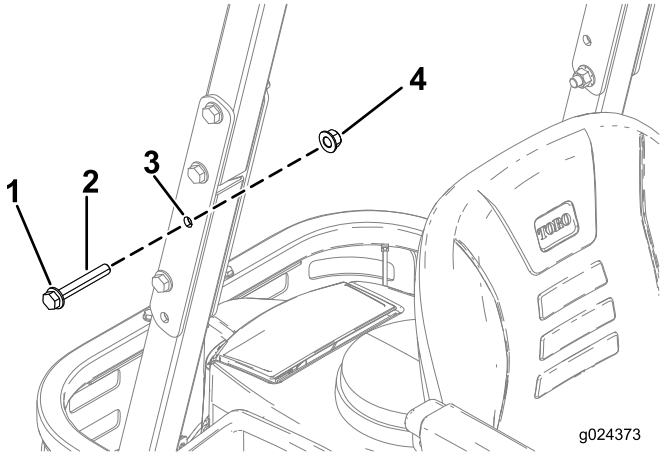

Figure 3

Left side shown; repeat on the right side

1. Washer
2. Bolt (1/2 x 3 inches)
3. Middle hole
4. Nut

2. Rotate the ROPS to the upright position.
3. Install the bolts (1/2 x 3 inches), washers, and nuts removed previously into the middle hole (Figure 3).
4. Remove the bolts (1/2 x 3 inches), washers, and nuts from the fourth hole in the ROPS plate (Figure 4).

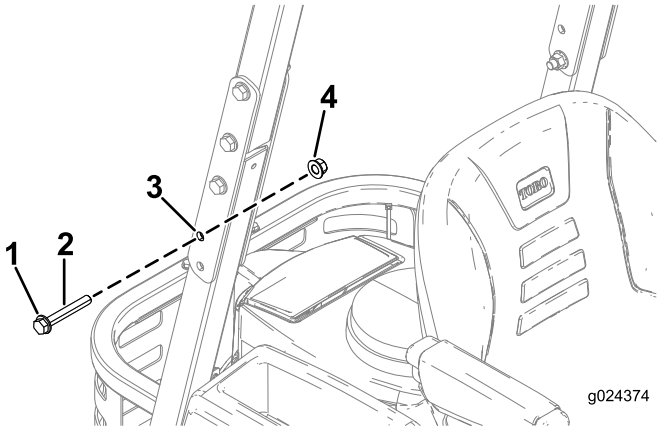

Figure 4

Left side shown; repeat on the right side

1. Washer
2. Bolt (1/2 x 3 inches)
3. Fourth hole
4. Nut

5. Install the removed bolts (1/2 x 3 inches), washers, and nuts into the lowest hole in the ROPS plate (Figure 5).

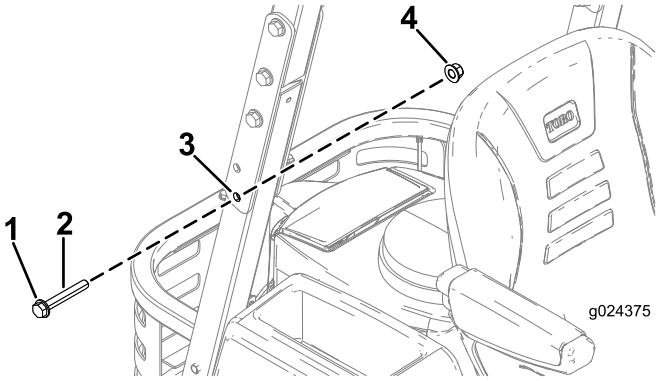

Figure 5

Left side shown; repeat on the right side

1. Washer
2. Bolt (1/2 x 3 inches)
3. Lowest hole
4. Nut

6. Torque all of the fasteners to approximately 45 N·m (33 ft-lb).

4

Checking the Mower Adjustment

No Parts Required

Procedure

Adjust the side-to-side level and the front-to-rear blade slope. Use the relevant procedures in the *Operator's Manual* to verify that the deck is level, and make any adjustments as necessary. Refer to the *Operator's Manual* for more information.

5

Completing the Setup

Parts needed for this procedure:

1	Ignition key
1	Hose coupling (not included with CE models)
1	*Operator's Manual*
1	Engine operator's manual
1	Operator training material

Procedure

Checking the Tire Pressure

Check the front and rear tires for proper inflation; refer to Checking the Tire Pressure in the *Operator's Manual* for the recommended inflation pressure.

Checking the Side-Discharge Chute

Remove the packing restraint holding the side discharge chute up and lower the chute into place.

Checking the Engine-Oil Level

Before you start the engine and use the machine, check the oil level in the engine crankcase; refer to Checking the Oil Level in the *Operator's Manual*.

Keep all the following items with the machine:

- Ignition key
- Hose coupling (not included in CE models)
- *Operator's Manual*
- Engine operator's manual
- View the operator training material before operating the machine.