Form No. 3403-942 Rev B

Door Kit

Workman® GTX Utility Vehicle with Cab

Model No. 07150

Installation Instructions

⚠ WARNING

CALIFORNIA
Proposition 65 Warning

This product contains a chemical or chemicals known to the State of California to cause cancer, birth defects, or reproductive harm.

Parts

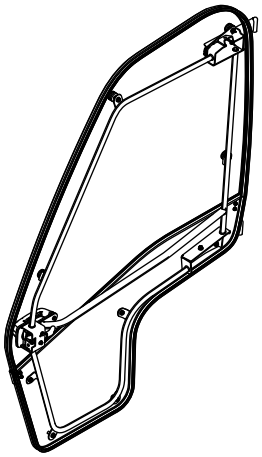

1x

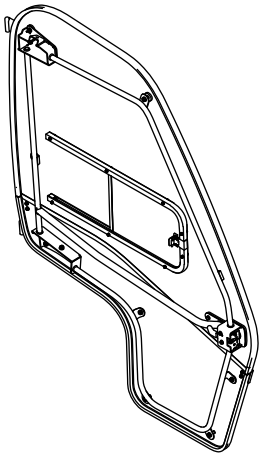

1x

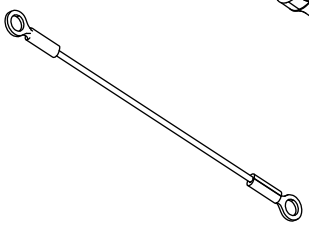

2x

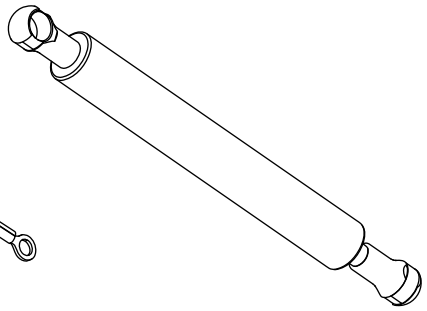

2x

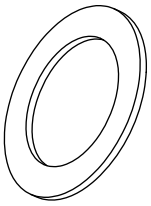

8x

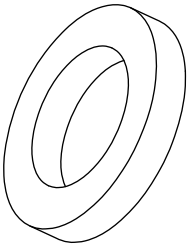

4x

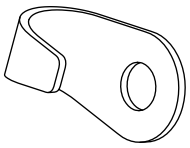

2x

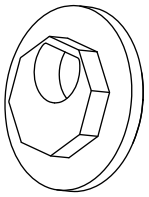

2x

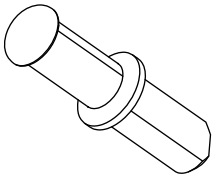

2x

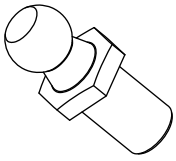

2x



6x

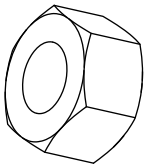

2x

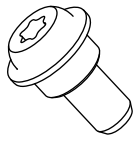

4x

© 2016—The Toro® Company
8111 Lyndale Avenue South
Bloomington, MN 55420

Register at www.Toro.com.

Original Instructions (EN)
Printed in the USA
All Rights Reserved

3403-942 B

Preparing the Machine

1. Park the machine on a level surface.
2. Engage the parking brake.
3. Shut off the engine.
4. Remove the key from the ignition.

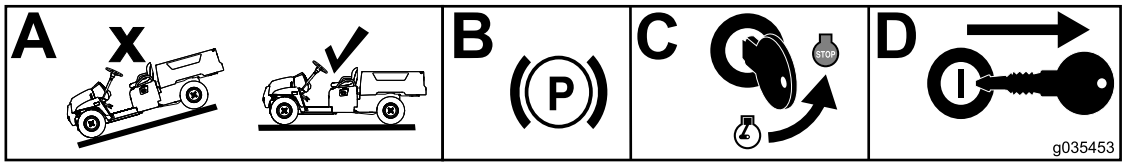

Figure 1

Installing the Door Kit

1. Secure the door straps and springs to the doors as shown in Figure 2.

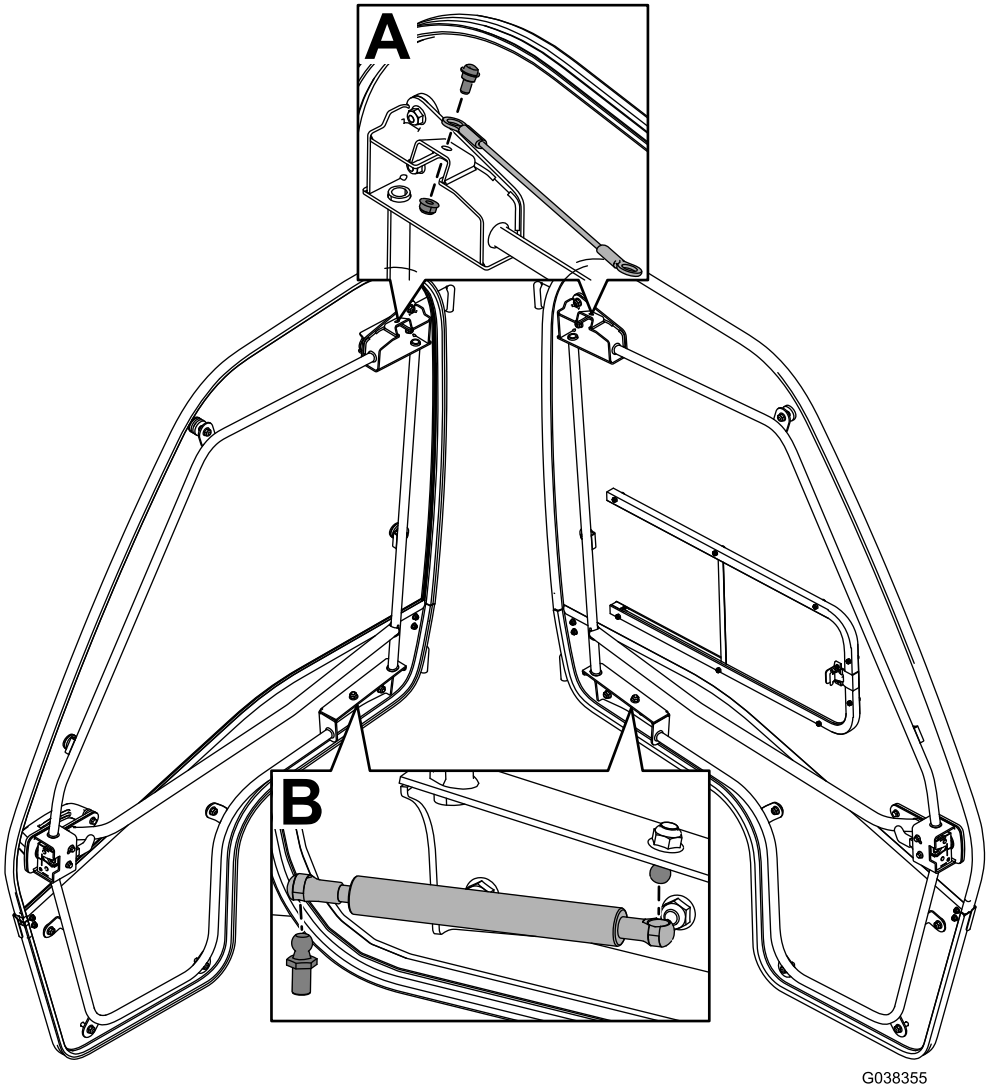

Figure 2

2. Place a brass washer on each of the 4 hinge posts and then carefully drop the doors into place as shown in Figure 3.

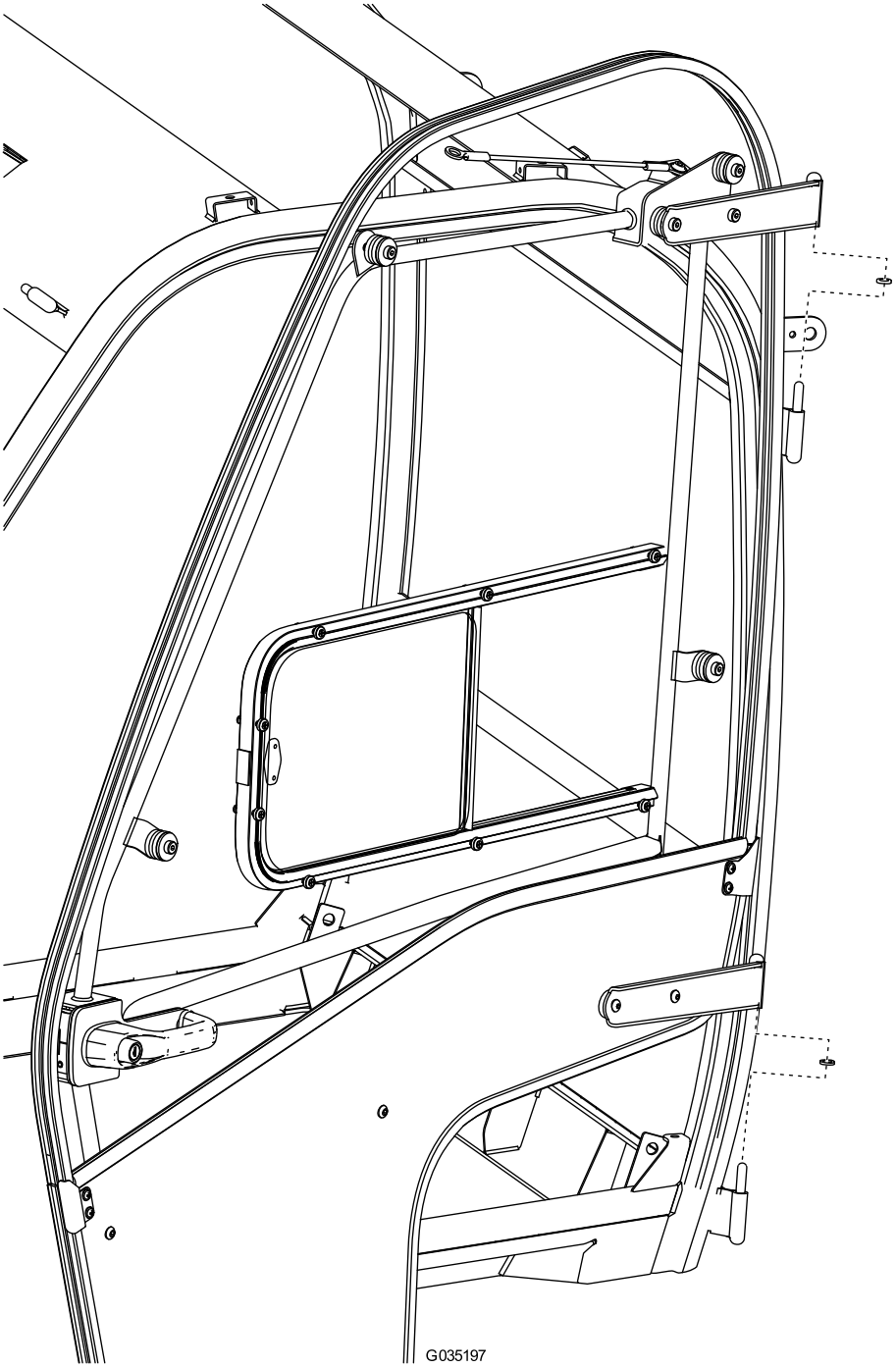

Figure 3

3. Secure the door straps and springs to the frame as shown in Figure 4.

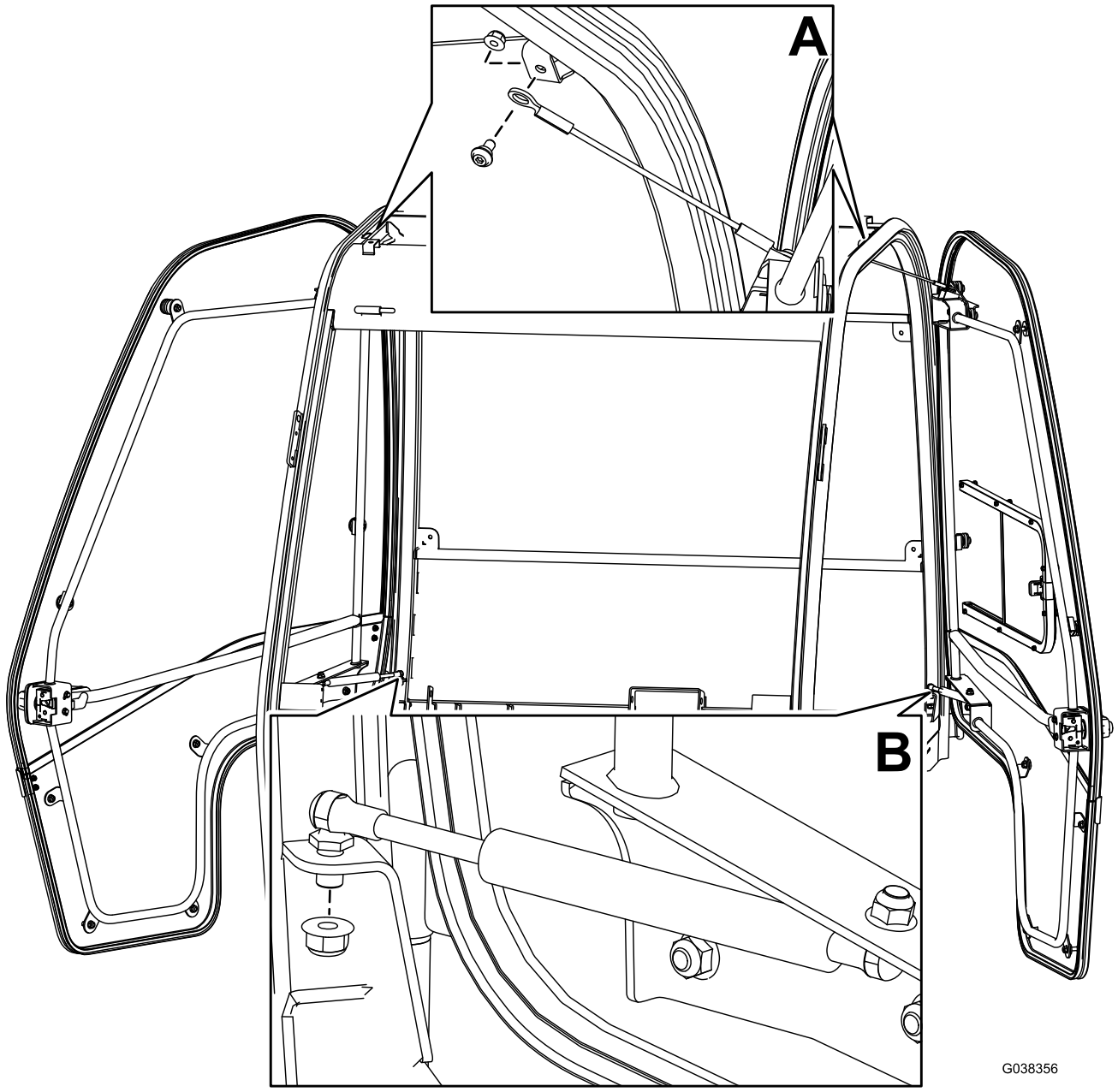

Figure 4

4. Install the door latches as shown in Figure 5.

Note: If the doors do not latch properly, adjust the assembly or install the extra shims until they do.

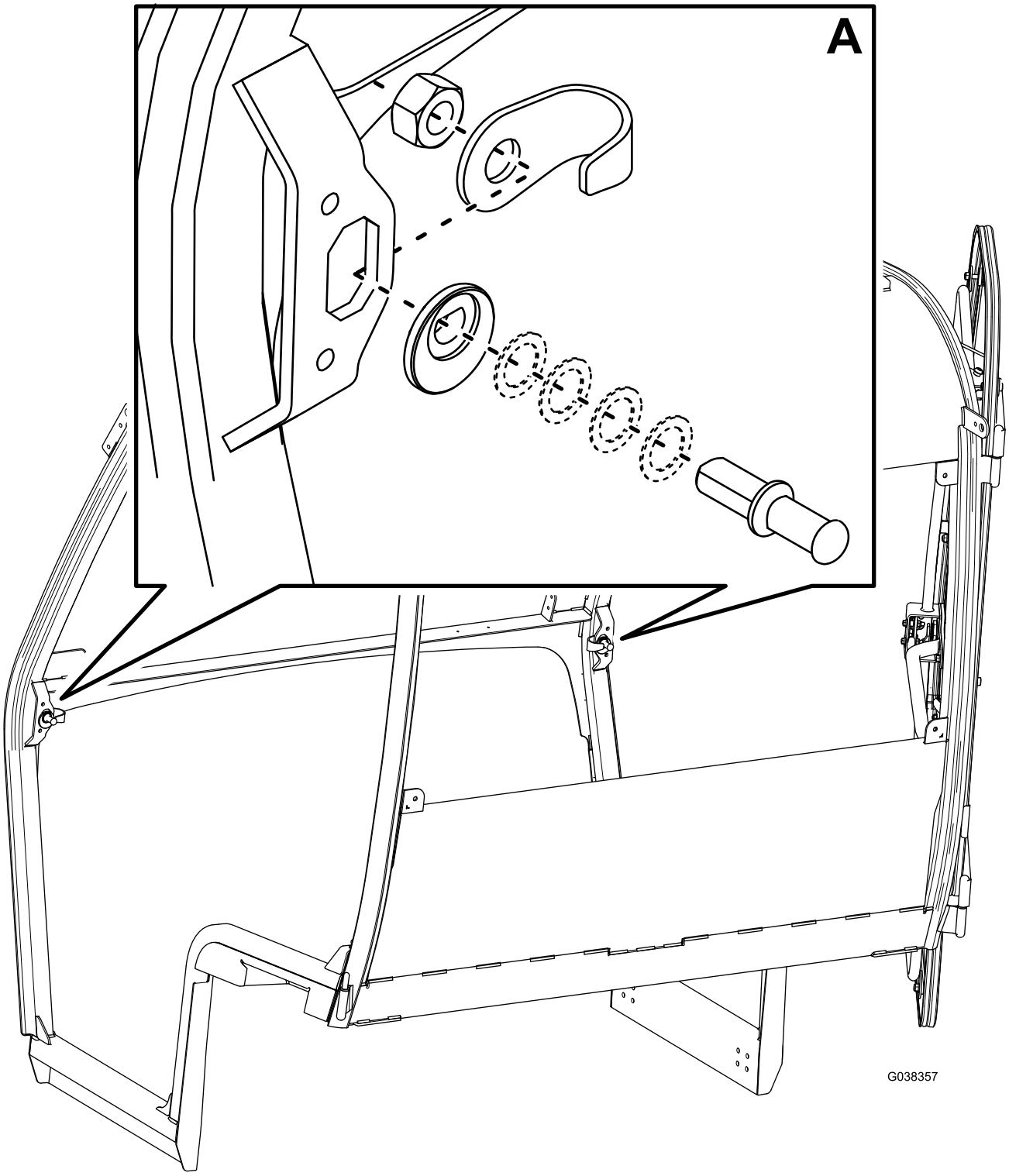

Figure 5

Notes:

Notes:



Count on it.