Form No. 3407-884 Rev A

TORO®

Count on it.

Operator's Manual

27-inch Verticutter

Reelmaster® 7000-D Cutting Unit

Model No. 03731—Serial No. 400000000 and Up

Register at www.Toro.com.
Original Instructions (EN)

CE

3407-884 A

⚠ WARNING

CALIFORNIA
Proposition 65 Warning

This product contains a chemical or chemicals known to the State of California to cause cancer, birth defects, or reproductive harm.

This product complies with all relevant European directives. For details, please see the Declaration of Incorporation (DOI) at the back of this publication.

Introduction

The verticutter kits are mounted on a ride-on machine and is intended to be used by professional, hired operators in commercial applications. It is primarily designed for verticutting grass on well-maintained lawns in parks, sports fields, and on commercial grounds.

Read this information carefully to learn how to operate and maintain your product properly and to avoid injury and product damage. You are responsible for operating the product properly and safely.

You may contact Toro directly at www.Toro.com for product and accessory information, help finding a dealer, or to register your product.

Whenever you need service, genuine Toro parts, or additional information, contact an Authorized Service Dealer or Toro Customer Service and have the model and serial numbers of your product ready. Figure 1 identifies the model and serial numbers on the product. Write the numbers in the space provided.

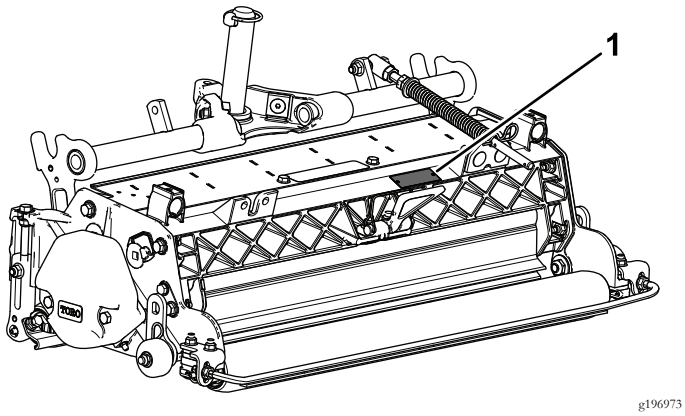

g196973

Figure 1

1. Location of the model and serial numbers

Model No. _____

Serial No. _____

This manual identifies potential hazards and has safety messages identified by the safety alert symbol (Figure 2), which signals a hazard that may cause serious injury or death if you do not follow the recommended precautions.



g000502

Figure 2

1. Safety alert symbol

This manual uses 2 words to highlight information. **Important** calls attention to special mechanical information and **Note** emphasizes general information worthy of special attention.

Contents

Safety 3
Safety and Instructional Decals 3
Setup 4
1 Inspecting the Verticutter 5
2 Installing the Transport Rollers 5
3 Installing the O-ring and the Grease Fitting 5
4 Installing the Turf-Compensation Spring 6
5 Adjusting the Blade Depth 7
6 Adjusting the Rear Grass Shield 7
7 Adjusting the Roller Scrapers 8
8 Adjusting the Transport Rollers 8
9 Mounting the Verticutter Reel 9
10 Adjusting the Cutting-Unit Steering 9
11 Adjusting the Turf-Compensation Settings 10
Product Overview 11
Specifications 11
Operation 11
Training Period 11
Operating Tips 11
Maintenance 12
Lubricating the Verticutter 12
Removing the Verticutter Blades from the Shaft 12
Installing the Verticutter Blades 13
Servicing the Roller 13

© 2016—The Toro® Company

8111 Lyndale Avenue South
Bloomington, MN 55420

Contact us at www.Toro.com.
Printed in the USA

All Rights Reserved

Safety

This machine has been designed in accordance with EN ISO 5395:2013.

Improper use or maintenance of this equipment can result in injury or death. To reduce the potential for injury or death, comply with the following safety instructions.

- Read, understand, and follow all instructions in the traction unit *Operator's Manual* before operating the verticutters.
- Read, understand, and follow all instructions in this *Operator's Manual* before operating the verticutters.
- Never allow children to operate the traction unit or the verticutters. Do not allow adults to operate the traction unit or the verticutters without proper instruction. Only trained operators who have read this *Operator's Manual* should operate the verticutters.
- Never operate the verticutters when tired, ill, or under the influence of drugs or alcohol.
- Keep all shields and safety devices in place. If a shield, a safety device, or a decal is illegible or damaged, repair or replace it before resuming operation. Also, tighten any loose nuts, bolts, and screws to ensure that the verticutters are in safe operating condition.
- Wear appropriate clothing, including eye protection; slip-resistant, substantial foot protection; and hearing protection. Tie back long hair and do not wear jewelry.
- Remove all debris or other objects that might be picked up and thrown by the reel blades of the cutting unit. Keep all bystanders away from the working area.
- If the verticutter blades strike a solid object or the unit vibrates abnormally, stop and shut off the engine. Check the verticutter for damaged parts. Repair any damage before starting and operating the verticutter.
- Park the machine on a level surface, lower the cutting units to the ground, shut off the engine, engage the parking brake, and remove the key whenever you leave the machine unattended.
- Be sure that the verticutters are in safe operating condition by keeping nuts, bolts, and screws tight.
- Remove the key from the switch to prevent accidental starting of the engine when servicing, adjusting, or storing the machine.
- Perform only those maintenance instructions described in this manual. If major repairs are ever needed or assistance is desired, contact an Authorized Toro Distributor.
- To ensure optimum performance and continued safety certification of the machine, use only genuine Toro replacement parts and accessories. Replacement parts and accessories made by other manufacturers could be dangerous, and such use could void the product warranty.

Safety and Instructional Decals

Safety decals and instructions are easily visible to the operator and are located near any area of potential danger. Replace any decal that is damaged or missing.

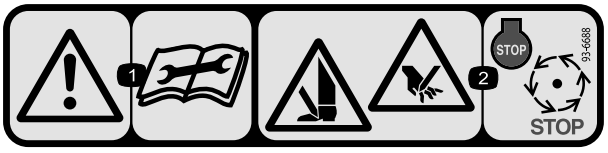

decal93-6688

93-6688

1. Warning—read the instructions before servicing or performing maintenance.
2. Cutting hazard of hand or foot—shut off the engine and wait for moving parts to stop.

Setup

Loose Parts

Use the chart below to verify that all parts have been shipped.

Procedure	Description	Qty.	Use
1	Verticutter	1	Inspect the verticutter.
2	Transport roller assembly Cotter pin	2 2	Install the transport rollers.
3	O-ring Grease fitting	1 1	Install the O-ring and the grease fitting.
4	Turf-compensation assembly Long bolt Carriage bolt Flange locknut Flange nut	1 1 2 3 1	Install the turf-compensation spring assembly.
5	No parts required	–	Adjust the blade depth.
6	No parts required	–	Adjust the rear grass shield.
7	No parts required	–	Adjust the roller scrapers.
8	No parts required	–	Adjust the transport rollers.
9	No parts required	–	Mount the verticutter reel.
10	No parts required	–	Adjust the cutting-unit steering.
11	No parts required	–	Adjust the turf-compensation settings.

Media and Additional Parts

Description	Qty.	Use
Operator's Manual	1	Review the material and save it in an appropriate place.

Important: **Without these parts, total setup cannot be completed.**

Note: Determine the left and right sides of the machine from the normal operating position.

Note: Whenever the verticutter has to be tipped to expose the verticutter blades, use the kick stand (supplied with traction unit) (Figure 3).

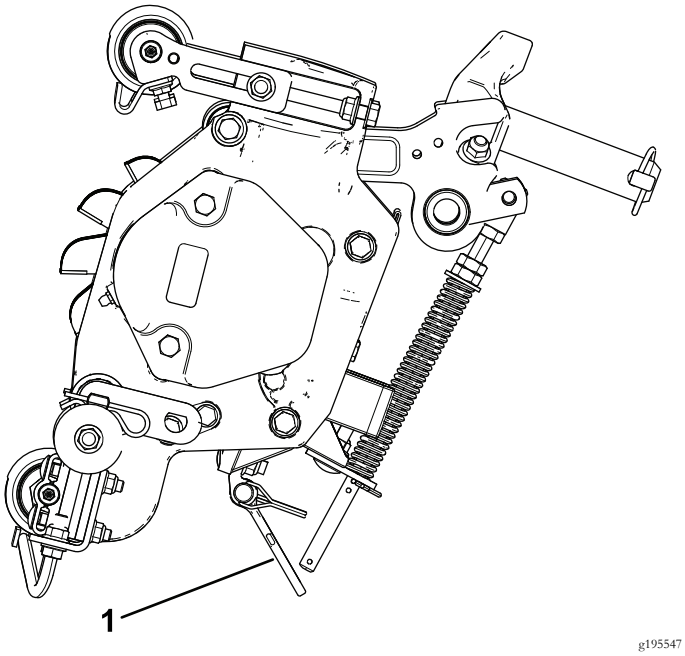

Figure 3

1. Kick stand

1

Inspecting the Verticutter

Parts needed for this procedure:

1	Verticutter

Procedure

After the verticutter is removed from the box, inspect the following:

1. Check each end of the reel for grease. Grease should be visibly evident in the reel bearings and in the internal splines of the reel shaft.
2. Ensure that all nuts and bolts are securely tightened.
3. Make sure that the carrier frame suspension operates freely and does not bind when moved back and forth.

2

Installing the Transport Rollers

Parts needed for this procedure:

2	Transport roller assembly
2	Cotter pin

Procedure

1. If the cutting units are installed on the traction unit, park the machine on a level surface, lower the cutting units to the ground, shut off the engine, engage the parking brake, and remove the key.
2. Secure a transport roller bracket to each side plate pin with a cotter pin (Figure 4).

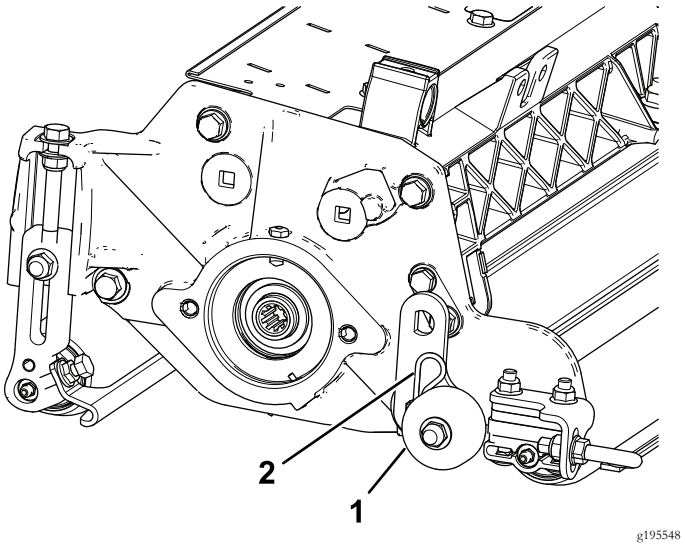

Figure 4

1. Transport roller assembly 2. Cotter pin

Note: The roller should be positioned to the rear of the verticutter.

3

Installing the O-ring and the Grease Fitting

Parts needed for this procedure:

1	O-ring
1	Grease fitting

Procedure

The grease fitting must be installed on the reel motor side of the verticutter. Use the following diagram to determine the position of each reel motor (Figure 5).

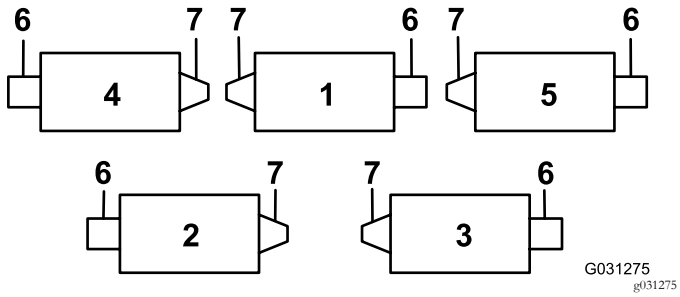

Figure 5

1. Verticutter 1
2. Verticutter 2
3. Verticutter 3
4. Verticutter 4
5. Verticutter 5
6. Reel motor
7. Weight

1. Remove and discard the setscrew on the reel-motor side plate (Figure 6).

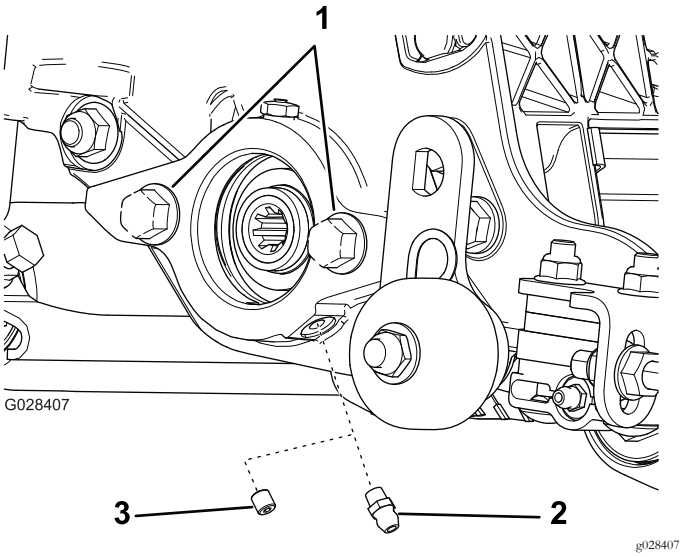

Figure 6

1. Bolts
2. Straight grease fitting (install)
3. Setscrew (remove and discard)

2. Install the straight grease fitting (Figure 6).
3. For verticutter 2 and verticutter 4 locations (Figure 5), move the end weight to the opposite side of the cutting unit.
4. If there are no bolts on the reel-motor side plate, install them (Figure 6).
5. Install the O-ring on the reel motor (Figure 7).

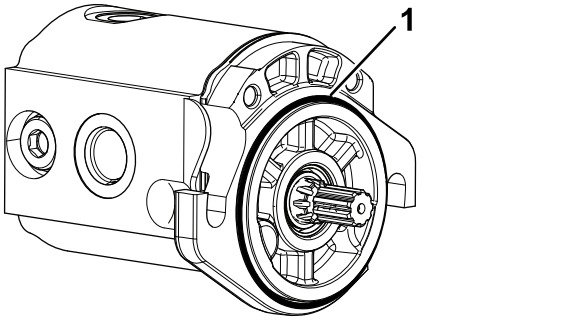

Figure 7

1. O-ring

4

Installing the Turf-Compensation Spring

Parts needed for this procedure:

1	Turf-compensation assembly
1	Long bolt
2	Carriage bolt
3	Flange locknut
1	Flange nut

Procedure

Install the turf compensation spring assembly on the same side as the reel motor (Figure 5 and Figure 8).

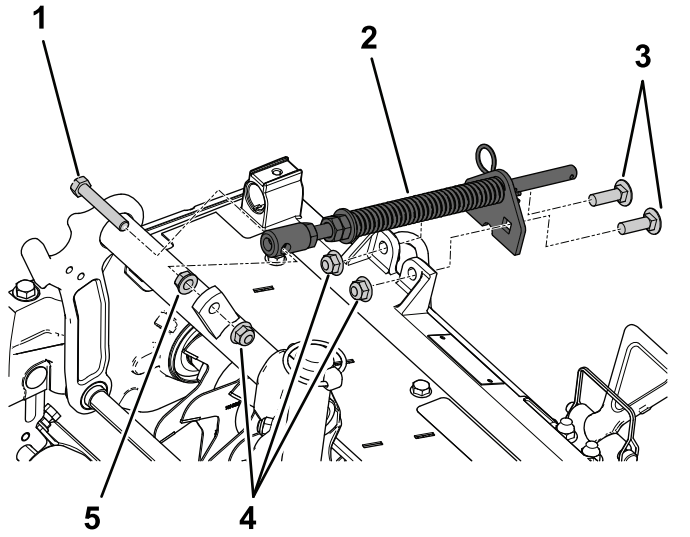

Figure 8

1. Long bolt
2. Compensation spring assembly
3. Carriage bolts
4. Flange locknuts
5. Flange nut

5

Adjusting the Blade Depth

No Parts Required

Procedure

Note: The maximum recommended blade penetration depth is 6 mm (1/4 inch).

1. Place the verticutter reel on a level surface.
2. Place 2 gauge bars, which have the desired depth of blade penetration below the ground, under the front and rear rollers of the verticutter reel (on each end of the reel) (Figure 9).

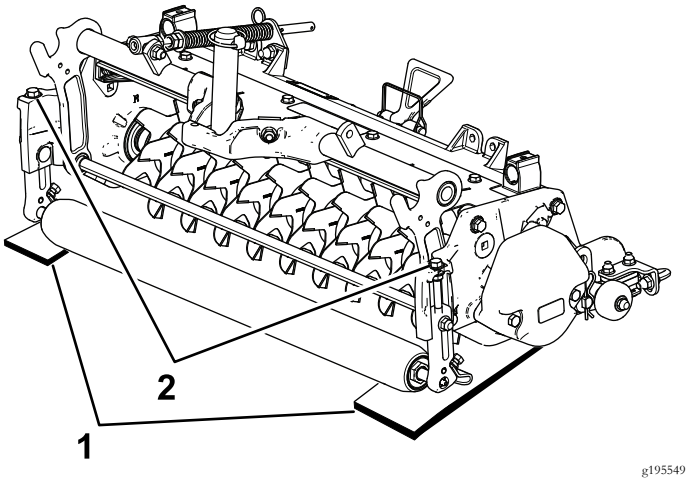

Figure 9

1. Gauge bar
2. Adjusting bolt

Note: The verticutter blades must not touch the gauge bars.

3. Turn the adjusting bolt on each height-of-cut bracket (Figure 9) so that the reel blades come in contact with the level surface on both ends.

Note: As the verticutter blades wear, the diameter of the reel will decrease and the depth setting will change. Check the depth setting periodically to ensure that the desired setting is achieved.

6

Adjusting the Rear Grass Shield

No Parts Required

Procedure

Note: When operating in turf conditions where much debris or unusually heavy thatch is encountered, open the rear discharge shield to help allow the debris to discharge from the reel.

1. Loosen the bolts on the pivot of the grass shield (Figure 10).

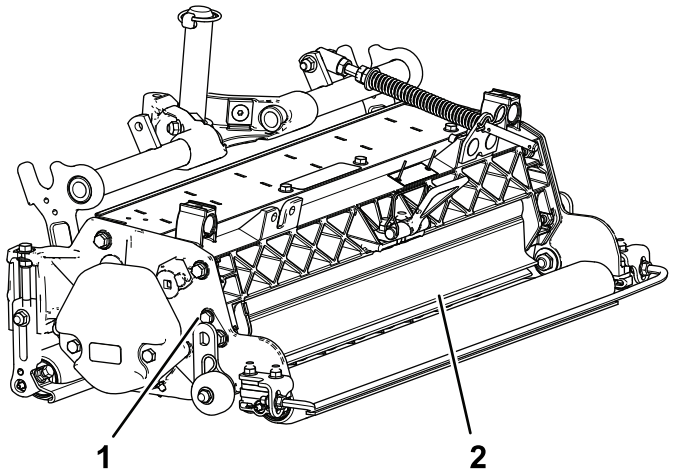

Figure 10

1. Pivot bolt
2. Rear grass shield

2. Rotate the grass shield to the desired setting, and tighten the bolts (Figure 10).

⚠ CAUTION

Thrown debris could cause personal injury.

Do not open the rear shield so that it is higher than level to ground.

7

Adjusting the Roller Scrapers

No Parts Required

Procedure

1. Loosen the flange nuts that secure the roller scrapers (Figure 11).

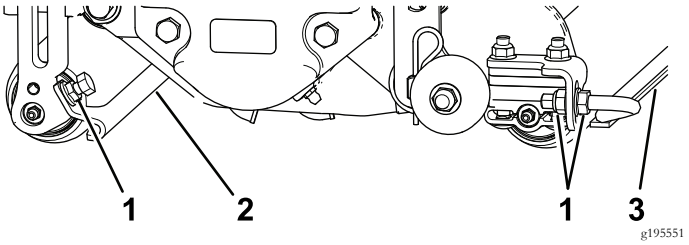

Figure 11

1. Flange nuts
2. Front roller scraper
3. Rear roller scraper

2. Move the scraper rods in or out to attain 0.0 to 0.75 mm (0.0 to 0.03 inch) clearance between the scraper and the roller.
3. Ensure that the scraper rod is parallel to the roller and to the level surface.
4. Tighten the flange nuts to lock the adjustment.

8

Adjusting the Transport Rollers

No Parts Required

Procedure

Before the verticutters are lowered to the shop floor or removed from the traction unit, lower the transport rollers (Figure 11) to protect the blades from hard surface contact.

1. Remove the cotter pin that secures the transport roller bracket to the side plate pin.
2. Position the transport roller as follows:
   - Lower the roller bracket before the verticutter is lowered to the shop floor.
   - Raise the roller bracket after the verticutter is raised to the operating position.

3. Secure the transport roller bracket to the side plate pin with the cotter pin.
4. Repeat the procedure on the opposite end of the verticutter.

9

Mounting the Verticutter Reel

No Parts Required

Procedure

Important: When lowering the verticutter reels, care must be taken to prevent damage to the reel blades due to contact with a concrete floor or a paved surface. Lower the transport rollers before lowering the verticuttiers to a concrete floor or a paved surface.

Figure 12 shows the orientation of the hydraulic drive motor for each of the locations.

Verticutter reels are mounted to the traction unit the same way cutting units are. Refer to the traction unit *Operator's Manual* for mounting instructions.

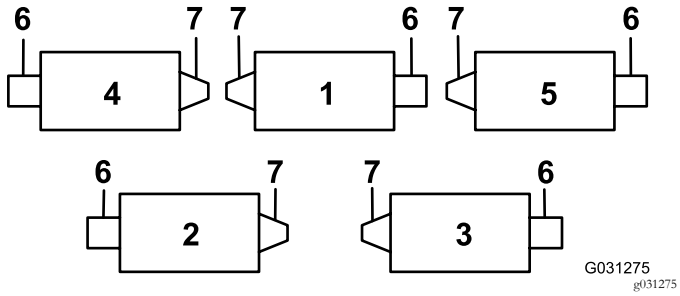

Figure 12

1. Verticutter 1
2. Verticutter 2
3. Verticutter 3
4. Verticutter 4
5. Verticutter 5
6. Reel motor
7. Weight

10

Adjusting the Cutting-Unit Steering

No Parts Required

Increased Steering for the Rear Cutting Units

Increase the steering on the rear cutting units by removing the 2 pivot spacers, hex socket screws, and flange locknuts (Figure 13) from the carrier frames of the rear cutting units (cutting units 2 and 3); refer to Figure 12.

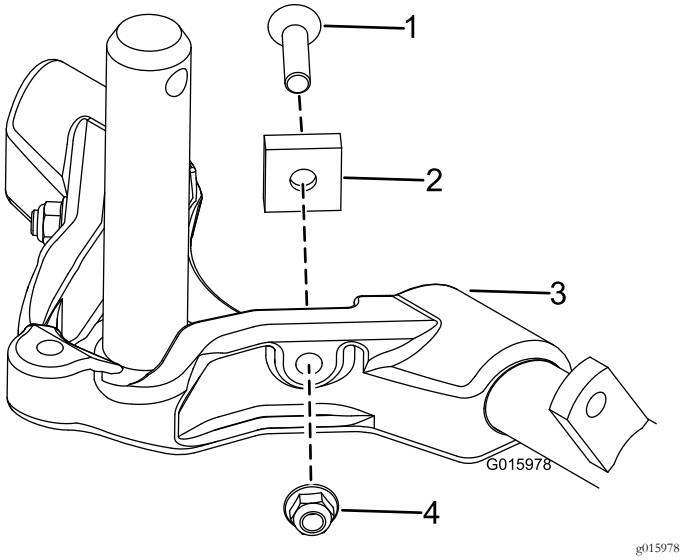

Figure 13

1. Hex socket screw
2. Pivot spacer
3. Carrier frame
4. Flange locknut

Locking the Steering

To lock (fix) the steering on the cutting units, secure the pivot yoke to the carrier frame with the snapper pin (Figure 14).

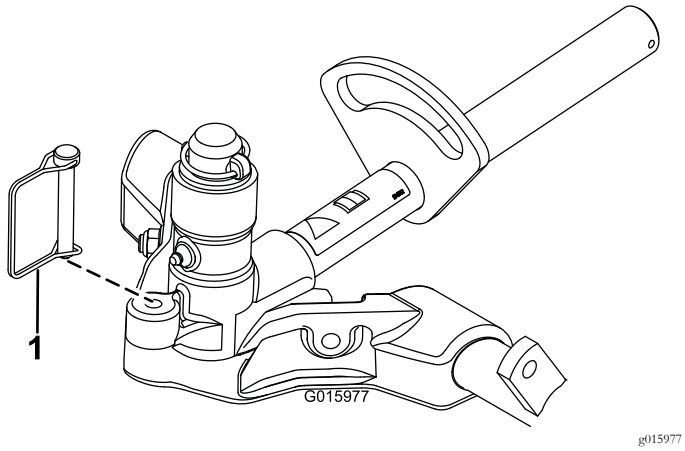

Figure 14

1. Snapper pin

Note: Fixed steering is recommended when cutting side hills.

11

Adjusting the Turf-Compensation Settings

No Parts Required

Procedure

Important: Make the spring adjustments with the cutting unit mounted to the traction unit, pointing straight ahead and lowered to the shop floor.

1. Make sure that the hairpin cotter is installed in the rear hole in the spring rod (Figure 15).

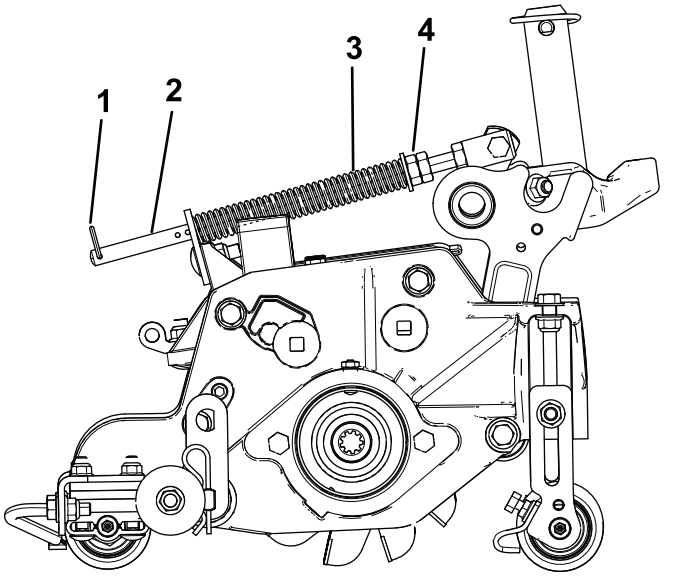

Figure 15

1. Hairpin cotter
2. Spring rod
3. Turf-compensation spring
4. Hex nuts

2. Tighten the hex nuts on the front end of the spring rod until the compressed length of the spring is 15.9 cm (6.25 inches) (Figure 15).

   Note: When operating the machine on rough terrain, decrease the spring length by 12.7 mm (1/2 inch).

   Note: The turf-compensation setting will need to be reset if the verticutter blade depth setting is changed.

Product Overview

Specifications

Net weight	64 kg (140 lb)

Operation

Note: Determine the left and right sides of the machine from the normal operating position.

Training Period

Before operating the verticutter reels, evaluate the performance of the reel at the desired setting. Operate in a clear, unused area to determine whether the desired results will be achieved. Make adjustments as necessary.

Operating Tips

1. Operate the traction unit at full throttle, full reel speed (setting 9) and at desired traction speed.
2. The maximum recommended setting is 6 mm (1/4 inch) deep blade penetration.
3. Power requirements to operate the verticutter reels will vary with turf and soil conditions. Travel speed may need to be reduced in some conditions.
4. When operating in turf conditions where much debris is encountered, or unusually heavy thatch, open the front and rear discharge shields to help allow the debris to discharge from the reel.

⚠ CAUTION

Thrown debris could cause personal injury.

Do not open the rear shield so that it is higher than level to the ground.

Maintenance

Lubricating the Verticutter

Each verticutter has 5 grease fittings (Figure 16) that must be lubricated weekly with No. 2 lithium grease.

The lubrication points are the front roller (2), the rear roller (2), and the reel motor splines (1).

Important: Lubricating the cutting units immediately after washing helps purge water out of the bearings and increases bearing life.

1. Wipe each grease fitting with a clean rag.
2. Apply grease until you see clean grease coming out of the roller seals and the bearing relief valve (Figure 16).

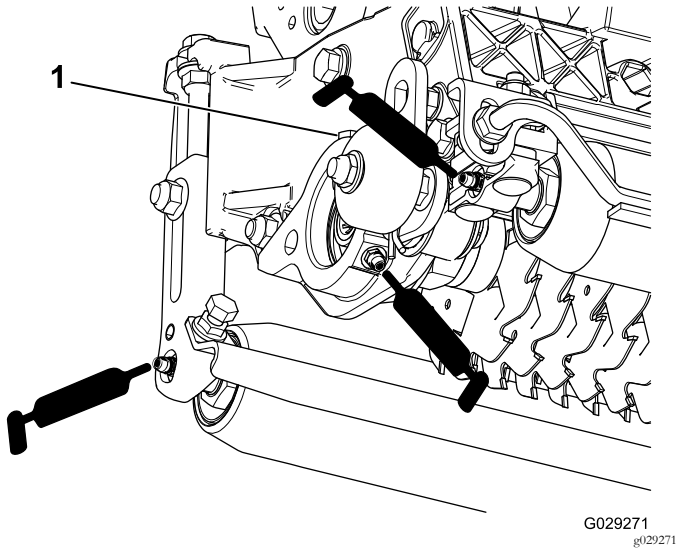

Figure 16

1. Relief valve

3. Wipe any excess grease away.

Removing the Verticutter Blades from the Shaft

1. Secure the end of the verticutter shaft, which has only one washer and nut, in a vise.
2. On other end of shaft, rotate the nut counter-clockwise and remove the nut.

⚠ CAUTION

The blades are extremely sharp and may have burrs that will cut your hands.

Use caution when removing the blades from the shaft.

3. Remove the small spacer, the washer, the blades and the large spacers. Clean and lubricate the square shaft with a light coating of grease to simplify the assembly (Figure 17).

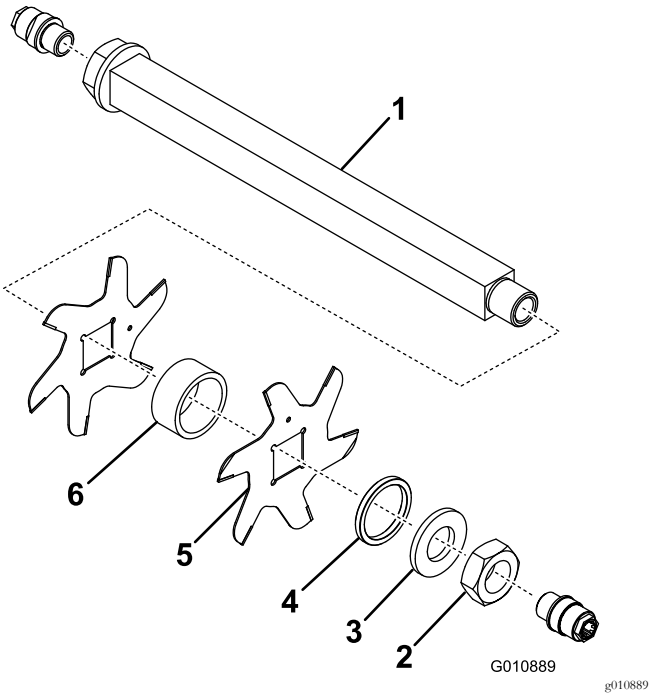

Figure 17

1. Shaft
2. Nut
3. Washer
4. Small spacer
5. Blade (19)
6. Large spacer (18)

Important: Do not invert the verticutter reel blades. The order of disassembly is extremely important. Do not invert the verticutter reel blades when disassembling or reverse the order when assembling them. Note the verticutter blades index hole. The index hole is provided for assembly in order to obtain the proper helix for the verticutter reel.

Installing the Verticutter Blades

1. Assemble a reel blade (Figure 18).
2. Assemble a large spacer.
3. Do not invert the reel blades when reassembling them onto the reel shaft.

   Note: If the blades are inverted, the blades that are in use (rounded) will be mixed with the sharp ends of the blades which were not in use. This will cause unsatisfactory performance in the verticutter reel unit. Pay close attention when disassembling the verticutter blades from the reel.
4. Install the next blade clockwise so that the index reference hole (Figure 18) is not aligned with the first blade hole by one flat of the shaft.

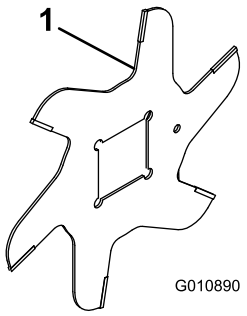

g010890

Figure 18

1. Index reference hole

5. Continue to install spacers and blades in this manner until the full complement of blades has been installed.

   Note: When properly assembled, the blades will be staggered in such a manner as to appear like a helix.
6. Install the small spacer to the shaft.
7. Apply Blue Loctite 242 to the nut. Install the nut onto the shaft, (with the machined side of the nut toward the spacer) and tighten it to 108.5 to 135 N·m (80 to 100 ft-lb).

Servicing the Roller

A Roller Rebuild Kit, Part 114-5430 and a Roller Rebuild Tool Kit, Part 115-0803 (Figure 19) are available for servicing the roller. The Roller Rebuild Kit includes all the bearings, bearing nuts, inner seals, and outer seals to rebuild a roller. The Roller Rebuild Tool Kit includes all the tools and the installation instructions required to rebuild a roller with the roller rebuild kit. Refer to your parts catalog or contact your distributor for assistance.

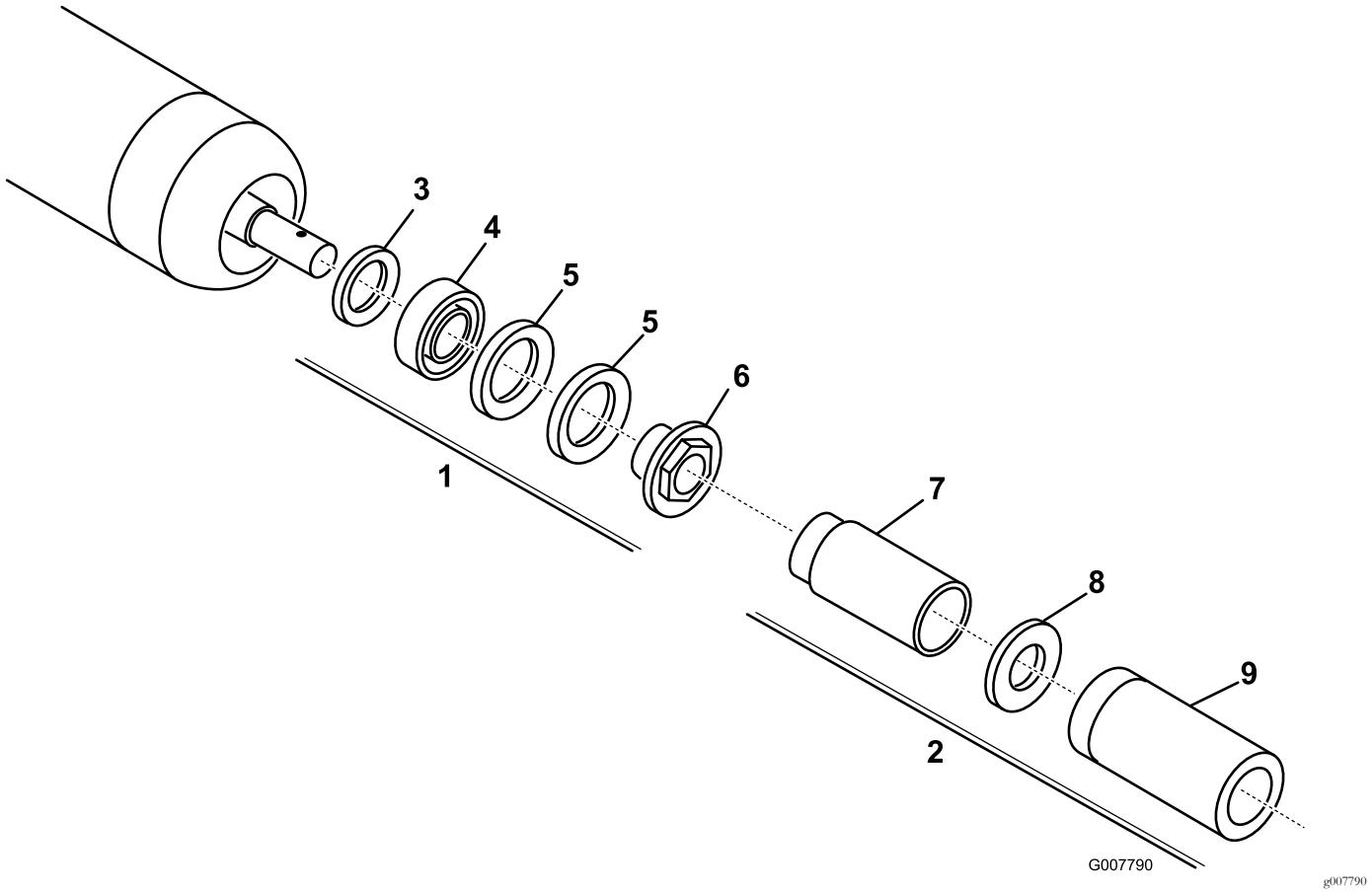

Figure 19

1. Rebuild kit (Part No. 114–5430)
2. Rebuild tool kit (Part No. 115–0803)
3. Inner seal
4. Bearing
5. Outer seal
6. Bearing nut
7. Inner seal tool
8. Washer
9. Bearing/outer seal tool

Notes:

Notes:

Notes:

Declaration of Incorporation

The Toro Company, 8111 Lyndale Ave. South, Bloomington, MN, USA declares that the following unit(s) conform(s) to the directives listed, when installed in accordance with the accompanying instructions onto certain Toro models as indicated on the relevant Declarations of Conformity.

Model No.	Serial No.	Product Description	Invoice Description	General Description	Directive
03731	400000000 and Up	27-inch Verticutter, Reelmaster 7000-D Cutting Unit	RM7000 27IN VERTICUTTER CU	Verticutter	2006/42/EC

Relevant technical documentation has been compiled as required per Part B of Annex VII of 2006/42/EC.

We will undertake to transmit, in response to requests by national authorities, relevant information on this partly completed machinery. The method of transmission shall be electronic transmittal.

This machinery shall not be put into service until incorporated into approved Toro models as indicated on the associated Declaration of Conformity and in accordance with all instructions, whereby it can be declared in conformity with all relevant Directives.

Certified:



David Klis
Sr. Engineering Manager
8111 Lyndale Ave. South
Bloomington, MN 55420, USA
November 15, 2016

EU Technical Contact:

Marcel Dutrieux
Manager European Product Integrity
Toro Europe NV
Nijverheidsstraat 5

2260 Oevel
Belgium

Tel. +32 16 386 659

European Privacy Notice

The Information Toro Collects
Toro Warranty Company (Toro) respects your privacy. In order to process your warranty claim and contact you in the event of a product recall, we ask you to share certain personal information with us, either directly or through your local Toro company or dealer.

The Toro warranty system is hosted on servers located within the United States where privacy law may not provide the same protection as applies in your country.

BY SHARING YOUR PERSONAL INFORMATION WITH US, YOU ARE CONSENTING TO THE PROCESSING OF YOUR PERSONAL INFORMATION AS DESCRIBED IN THIS PRIVACY NOTICE.

The Way Toro Uses Information
Toro may use your personal information to process warranty claims, to contact you in the event of a product recall and for any other purpose which we tell you about. Toro may share your information with Toro's affiliates, dealers or other business partners in connection with any of these activities. We will not sell your personal information to any other company. We reserve the right to disclose personal information in order to comply with applicable laws and with requests by the appropriate authorities, to operate our systems properly or for our own protection or that of other users.

Retention of your Personal Information
We will keep your personal information as long as we need it for the purposes for which it was originally collected or for other legitimate purposes (such as regulatory compliance), or as required by applicable law.

Toro's Commitment to Security of Your Personal Information
We take reasonable precautions in order to protect the security of your personal information. We also take steps to maintain the accuracy and current status of personal information.

Access and Correction of your Personal Information
If you would like to review or correct your personal information, please contact us by email at legal@toro.com.

Australian Consumer Law

Australian customers will find details relating to the Australian Consumer Law either inside the box or at your local Toro Dealer.

The Toro Warranty

A Two-Year Limited Warranty

Conditions and Products Covered

The Toro Company and its affiliate, Toro Warranty Company, pursuant to an agreement between them, jointly warrant your Toro Commercial product ("Product") to be free from defects in materials or workmanship for two years or 1500 operational hours*, whichever occurs first. This warranty is applicable to all products with the exception of Aerators (refer to separate warranty statements for these products). Where a warrantable condition exists, we will repair the Product at no cost to you including diagnostics, labor, parts, and transportation. This warranty begins on the date the Product is delivered to the original retail purchaser.
* Product equipped with an hour meter.

Instructions for Obtaining Warranty Service

You are responsible for notifying the Commercial Products Distributor or Authorized Commercial Products Dealer from whom you purchased the Product as soon as you believe a warrantable condition exists. If you need help locating a Commercial Products Distributor or Authorized Dealer, or if you have questions regarding your warranty rights or responsibilities, you may contact us at:

Toro Commercial Products Service Department
Toro Warranty Company
8111 Lyndale Avenue South
Bloomington, MN 55420-1196

952–888–8801 or 800–952–2740
E-mail: commercial.warranty@toro.com

Owner Responsibilities

As the Product owner, you are responsible for required maintenance and adjustments stated in your *Operator's Manual*. Failure to perform required maintenance and adjustments can be grounds for disallowing a warranty claim.

Items and Conditions Not Covered

Not all product failures or malfunctions that occur during the warranty period are defects in materials or workmanship. This warranty does not cover the following:

- Product failures which result from the use of non-Toro replacement parts, or from installation and use of add-on, or modified non-Toro branded accessories and products. A separate warranty may be provided by the manufacturer of these items.
- Product failures which result from failure to perform recommended maintenance and/or adjustments. Failure to properly maintain your Toro product per the Recommended Maintenance listed in the *Operator's Manual* can result in claims for warranty being denied.
- Product failures which result from operating the Product in an abusive, negligent, or reckless manner.
- Parts subject to consumption through use unless found to be defective. Examples of parts which are consumed, or used up, during normal Product operation include, but are not limited to, brake pads and linings, clutch linings, blades, reels, rollers and bearings (sealed or greasable), bed knives, spark plugs, castor wheels and bearings, tires, filters, belts, and certain sprayer components such as diaphragms, nozzles, and check valves, etc.
- Failures caused by outside influence. Conditions considered to be outside influence include, but are not limited to, weather, storage practices, contamination, use of unapproved fuels, coolants, lubricants, additives, fertilizers, water, or chemicals, etc.
- Failure or performance issues due to the use of fuels (e.g. gasoline, diesel, or biodiesel) that do not conform to their respective industry standards.
- Normal noise, vibration, wear and tear, and deterioration.
- Normal "wear and tear" includes, but is not limited to, damage to seats due to wear or abrasion, worn painted surfaces, scratched decals or windows, etc.

Parts

Parts scheduled for replacement as required maintenance are warranted for the period of time up to the scheduled replacement time for that part. Parts replaced under this warranty are covered for the duration of the original product warranty and become the property of Toro. Toro will make the final decision whether to repair any existing part or assembly or replace it. Toro may use remanufactured parts for warranty repairs.

Deep Cycle and Lithium-Ion Battery Warranty:

Deep cycle and Lithium-Ion batteries have a specified total number of kilowatt-hours they can deliver during their lifetime. Operating, recharging, and maintenance techniques can extend or reduce total battery life. As the batteries in this product are consumed, the amount of useful work between charging intervals will slowly decrease until the battery is completely worn out. Replacement of worn out batteries, due to normal consumption, is the responsibility of the product owner. Battery replacement may be required during the normal product warranty period at owner's expense. Note: (Lithium-Ion battery only): A Lithium-Ion battery has a part only prorated warranty beginning year 3 through year 5 based on the time in service and kilowatt hours used. Refer to the *Operator's Manual* for additional information.

Maintenance is at Owner's Expense

Engine tune-up, lubrication, cleaning and polishing, replacement of filters, coolant, and completing recommended maintenance are some of the normal services Toro products require that are at the owner's expense.

General Conditions

Repair by an Authorized Toro Distributor or Dealer is your sole remedy under this warranty.

Neither The Toro Company nor Toro Warranty Company is liable for indirect, incidental or consequential damages in connection with the use of the Toro Products covered by this warranty, including any cost or expense of providing substitute equipment or service during reasonable periods of malfunction or non-use pending completion of repairs under this warranty. Except for the Emissions warranty referenced below, if applicable, there is no other express warranty. All implied warranties of merchantability and fitness for use are limited to the duration of this express warranty.

Some states do not allow exclusions of incidental or consequential damages, or limitations on how long an implied warranty lasts, so the above exclusions and limitations may not apply to you. This warranty gives you specific legal rights, and you may also have other rights which vary from state to state.

Note regarding engine warranty:

The Emissions Control System on your Product may be covered by a separate warranty meeting requirements established by the U.S. Environmental Protection Agency (EPA) and/or the California Air Resources Board (CARB). The hour limitations set forth above do not apply to the Emissions Control System Warranty. Refer to the Engine Emission Control Warranty Statement supplied with your product or contained in the engine manufacturer's documentation for details

Countries Other than the United States or Canada

Customers who have purchased Toro products exported from the United States or Canada should contact their Toro Distributor (Dealer) to obtain guarantee policies for your country, province, or state. If for any reason you are dissatisfied with your Distributor's service or have difficulty obtaining guarantee information, contact the Toro importer.

374-0253 Rev D