Form No. 3366-560 Rev G

TORO®

Count on it.

Parts Catalog

Greensmaster® 3420 2-Wheel Drive Traction Unit

Model No. 04540—Serial No. 311000001 and Up

Register at www.Toro.com.
Original Instructions (EN)

3366-560 G

Ordering Replacement Parts

To order replacement parts, please supply the part number, the quantity, and the description of each part desired.

Understanding Reference Numbers

Each identified part in an illustration has a reference number. The reference number for a part also appears in the parts list, along with other information about the part.

This catalog uses two special reference number formats, one to indicate parts in a service assembly and another to indicate the quantity of a given part in an illustration.

Service Assembly Reference Numbers

Parts in service assemblies have reference numbers in the form a:b. The a represents the reference number of the entire service assembly and the b represents a sequential number unique to each part within the service assembly.

For example, a wheel assembly might be identified by reference number 6, the tire by 6:1, the valve by 6:2, and the wheel by 6:3. When you order the assembly identified by reference number 6, you receive all parts identified by reference numbers 6:1,6:2, and 6:3. However, you may also order any part individually. Reference numbers of this type appear in illustration and in parts lists.

Reference Numbers Indicating Quantity

In an illustration, if a reference number indicates more than one part, the reference number has the form nX y. The n represents the quantity of the part, the X is the multiplication symbol, and the y represents the reference number.

For example, in an illustration, the reference number 2X 37 means that two of the parts identified by reference number 37 are indicated.

List of Abbreviations

AR: as required

ASM: assembly

BBC: blade brake control

BHTF: button head thread forming

CARR: carriage

CCW: counter clockwise

CW: clockwise

DEG: degrees

DPA: Dual Point Adjustment

ECM: electronic control module

EXT: external

FH: flat head

GA: gauge

HD: heavy-duty

HF: hex flange

HH: hex head

HHF: hex head flange

HHFTF: hex head flange thread forming

HJ: hex jam

HLH: hex lag head

HOC: height-of-cut

HP: high pressure

HSBH: hex socket button head

HSFH: hex socket flat head

HSH: hex socket head

HWH: hex washer head

HWHTF: hex washer head thread forming

HYD: hydraulic

LH: left hand

LP: low pressure

LPG: Liquefied Petroleum Gas

NI: nylon insert

NPTF: national pipe thread fine

PFH: phillips flat head

PPH: phillips pan head

PPHTF: phillips pan head thread forming

PRH: phillips round head

PTH: phillips truss head

PTO: power-take-off

RH: right hand

ROPS: roll-over protection system

RRB: rear roller brush

SFH: slotted fillister head

SHH: slotted hex head

SHWH: slotted hex washer head

SPH: slotted pan head

SQH: square head

SRH: slotted round head

STD: standard

TAP: self tapping

TTH: torx truss head

Contents

Roll-Over Protection System Assembly . . . 5
Brake Cable Grommet Assembly . . . 6
Frame Assembly . . . 7
Platform Assembly . . . 8
Right Hand Support Platform Assembly . . . 9
Seatbase Assembly . . . 10
Steering Arm and Adjuster Assembly . . . 11
Brake Cable and Lever Assembly . . . 12
Back Wheel Assembly . . . 13
Hydraulic Cylinder Assembly No. 117-4480 . . . 14
Front Wheel Assembly . . . 15
Right Hand Brake Assembly No. 115-9441 . . . 16
Left Hand Brake Assembly No. 115-9440 . . . 17
Right Hand Wheel Motor Assembly No. 117-4302 . . . 18
Left Hand Wheel Motor Assembly No. 117-4303 . . . 19
Console and Reel Control Assembly . . . 20
Traction Interface Control Assembly . . . 21
Ignition, Throttle and Choke Control Assembly . . . 22
Console Cable Routing Assembly . . . 23
Engine and Exhaust Assembly . . . 24
Radiator, Fuel Pump and Air Cleaner Assembly . . . 26
Air Cleaner Assembly No. 95-5805 . . . 27
Radiator, Air and Fuel Line Assembly . . . 28
Generator and Engine Frame Assembly . . . 29
Generator/Controller Assembly No. 117-8185 . . . 30
Generator Assembly No. 117-8182 . . . 31
Generator Service Assembly No. 119-1069 . . . 32
Fuel and Hydraulic Tank Assembly . . . 33
Controller Assembly . . . 34
Battery Assembly . . . 35
Wire Harness Assembly . . . 36
Pump Coupling Assembly . . . 37
Hydraulic Pump Assembly No. 114-9957 . . . 38
Neutral Centering Assembly . . . 40
Traction Drive Hydraulic Line Assembly . . . 41
Traction Drive Hose Routing Assembly . . . 42
Lift Circuit Assembly . . . 43
Steering Valve Assembly No. 114-4672 . . . 44
Hydraulic Cylinder Assembly No. 119-8129 . . . 45
Hydraulic Cylinder Assembly No. 119-8128 . . . 46
Hydraulic Lift Manifold Assembly No. 119-7118 . . . 47
Hydraulic Lift Manifold Assembly No. 117-9856 . . . 48
Steering Circuit Assembly (1) . . . 49
Steering Circuit Assembly (2) . . . 50
Hydraulic Gear Pump Assembly No. 114-9958 . . . 51
Steering Circuit Assembly (3) . . . 52
Steering Circuit Assembly (4) . . . 53
Suspension and Basket Assembly . . . 54
Suspension A-Arm Assembly . . . 55
Suspension Crossarm Assembly . . . 56
Suspension Pin Position Assembly . . . 57
Electric Reel Motor Assembly . . . 58
Electric Reel Motor Assembly No. 119-7575 . . . 59
Electric Motor Assembly . . . 60

© 2016—The Toro® Company
8111 Lyndale Avenue South
Bloomington, MN 55420

Contact us at www.Toro.com.
Printed in the USA.
All Rights Reserved

Contents (continued)

Electric Mow Battery Assembly 61
Crankcase Assembly 63
Oil Pan Assembly 64
Cylinder Head Assembly 65
Gear Case Assembly 66
Cylinder Head Cover Assembly 67
Dipstick and Guide Assembly 68
Main Bearing Case Assembly 69
Cam Shaft and Idle Gear Shaft Assembly 70
Piston and Crankshaft Assembly 71
Flywheel and Fuel Camshaft Assembly 72
Idle Apparatus and Stop Solenoid Assembly 73
Injection Pump and Governor Assembly 74
Speed Control Plate Assembly 75
Nozzle Holder and Glow Plug Assembly 76
Nozzle Holder Component Assembly 77
Alternator and Pulley and Fuel Pump Cover Assembly 80
Alternator Components 81
Starter Installation Assembly 82
Starter Assembly No. 110-3800 83
Water Flange, Thermostat and Water Pump Assembly 84
Water Pipe Assembly 85
Valve and Rocker Arm Assembly 86
Intake Manifold Assembly 87
Exhaust Manifold Assembly 88
Attachments and Accessories 89

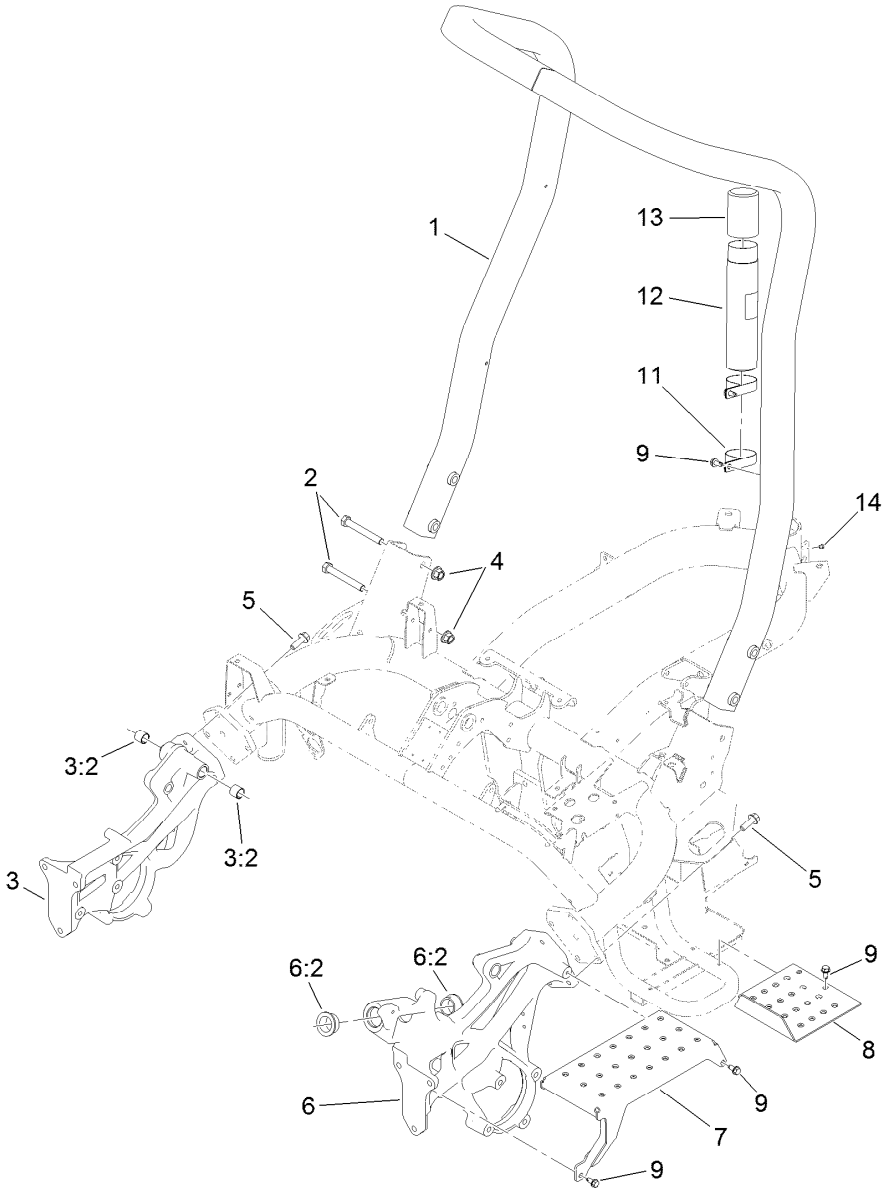

Roll-Over Protection System Assembly

Ref.	Part Number	Qty.	Description
1	115-8206	1	ROPS Assembly
2	325-35	4	Screw-HH
3	117-9023	1	Casting-Side, RH
3:2	94-9609	2	Bushing-Straight
4	99-5107	4	Nut-Lock
5	117-9035	8	Screw-HHF
6	117-9022	1	Casting-Side, LH
6:2	60-0080	2	Bushing
7	117-9051-01	1	Step
8	119-4468-01	1	Plate-Step
9	32104-32	9	Screw-HWH
11	2412-133	2	R-Clamp
12	104-7050	1	Tube-Manual
13	104-7048	1	Cap-Housing
14	302-59	1	Plug-Threaded

Brake Cable Grommet Assembly

Ref.	Part Number	Qty.	Description
1	240-5	1	Grommet
2	98-8529	3	Grommet

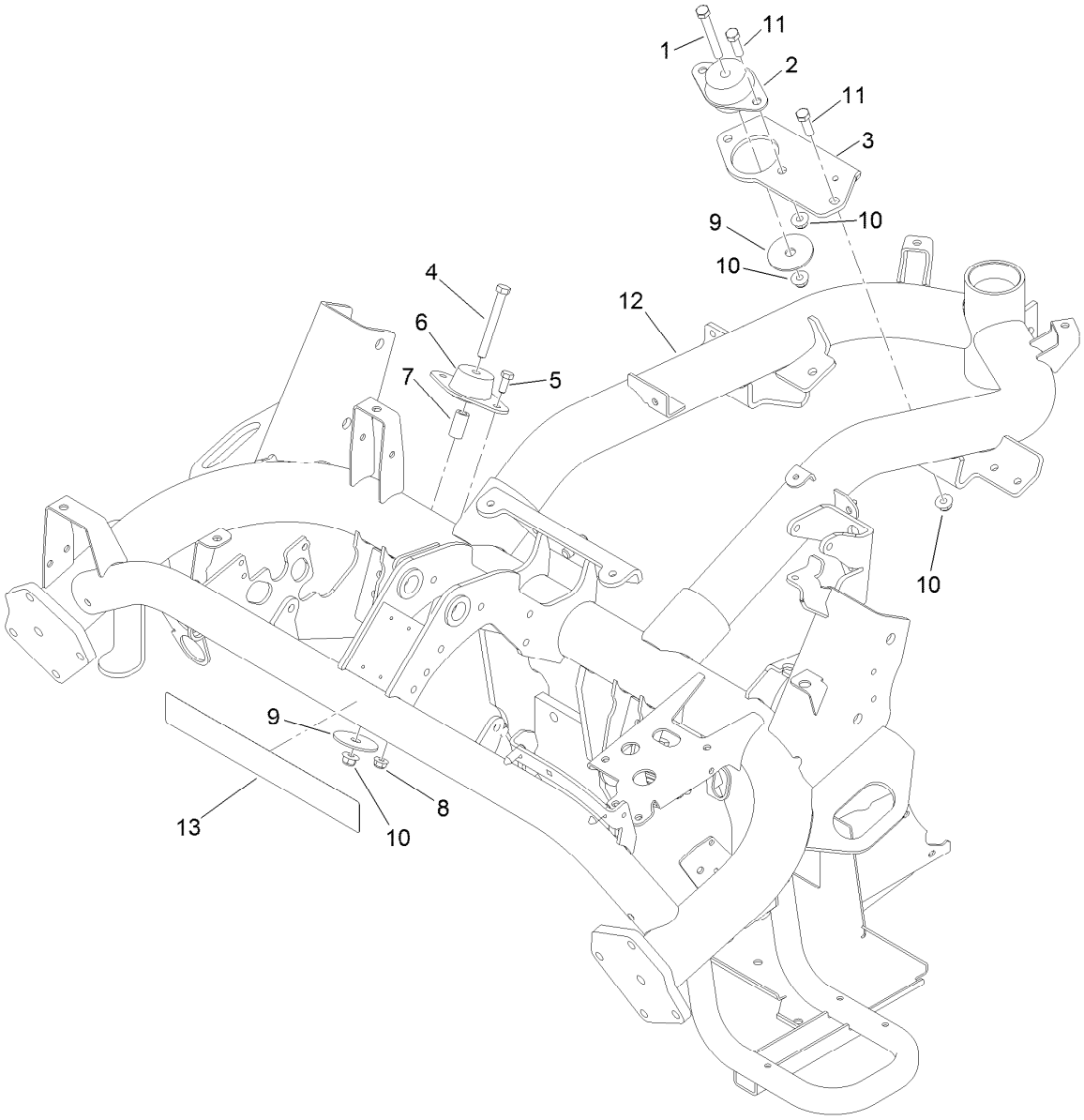

Frame Assembly

Ref.	Part Number	Qty.	Description
1	323-14	1	Screw-HH
2	53-9680	1	Mount-Engine
3	119-2134-01	1	Bracket-Mount, Rear
4	323-20	2	Screw-HH
5	322-4	4	Screw-HH
6	83-1030	2	Mount-Engine
7	110-4631	2	Tube-Spacer
8	104-8300	4	Nut-Flange, NI
9	87-5100	3	Washer-Snubbing
10	104-8301	6	Nut-Flange, NI
11	323-7	3	Screw-HH
12	117-4461-01	1	Diesel Frame ASM
13	115-8196	1	Decal

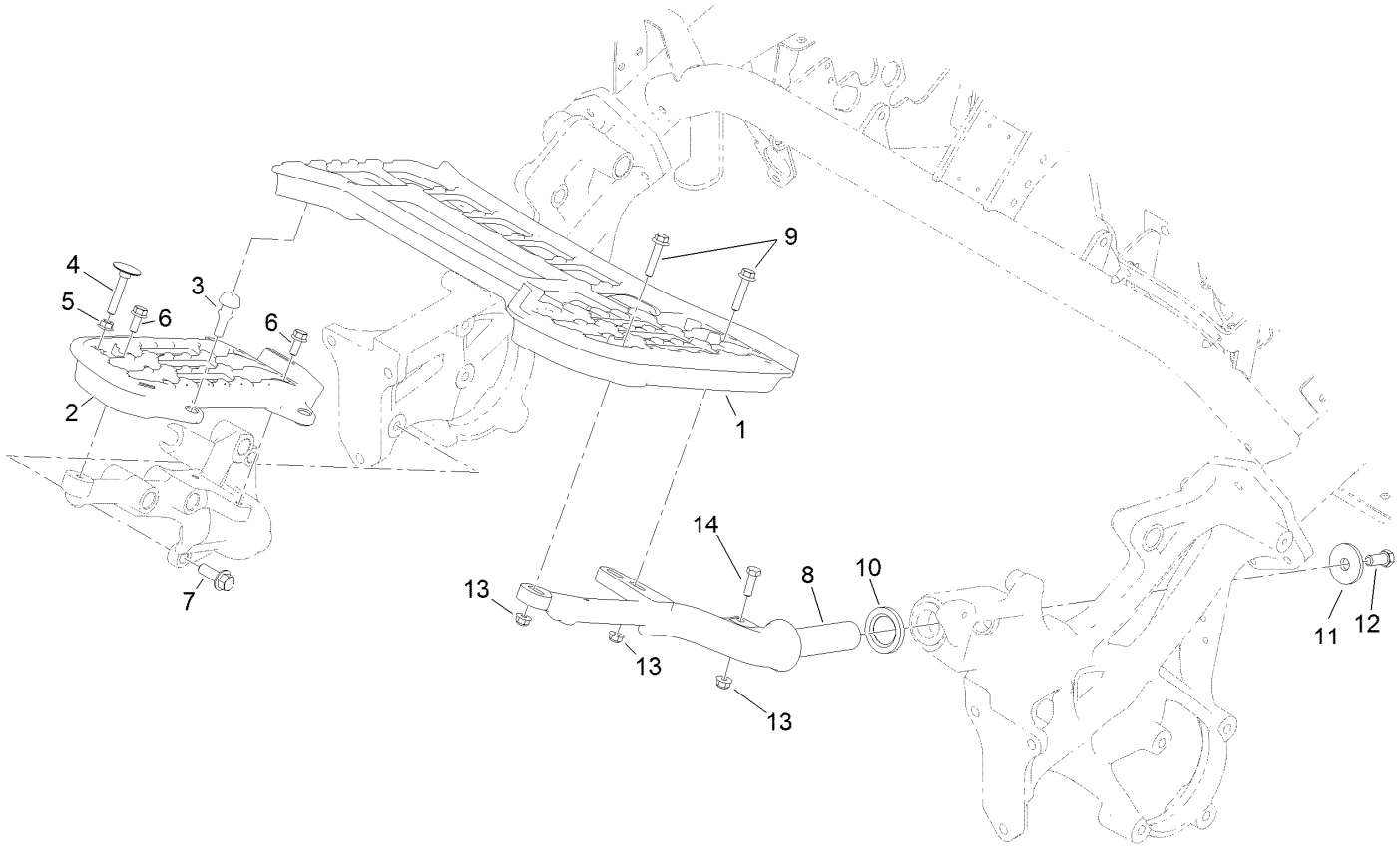

Platform Assembly

Ref.	*Part Number*	*Qty.*	*Description*
1	117-9009	1	Platform-LH
2	117-9008	1	Platform-RH
3	117-9072	2	Bumper-Rubber
4	115-8240	1	Screw-Elevator
5	32128-20	1	Nut-HF
6	3234-47	3	Screw-HHF
7	117-9035	3	Screw-HHF
8	117-9006-01	1	Support-Platform, LH
9	115-1794	3	Screw-HHF
10	94-8946	1	Washer-Thrust
11	84-1560	1	Washer-Thrust
12	324-4	1	Screw-HH
13	104-8300	4	Nut-Flange, NI
14	322-5	1	Screw-HH

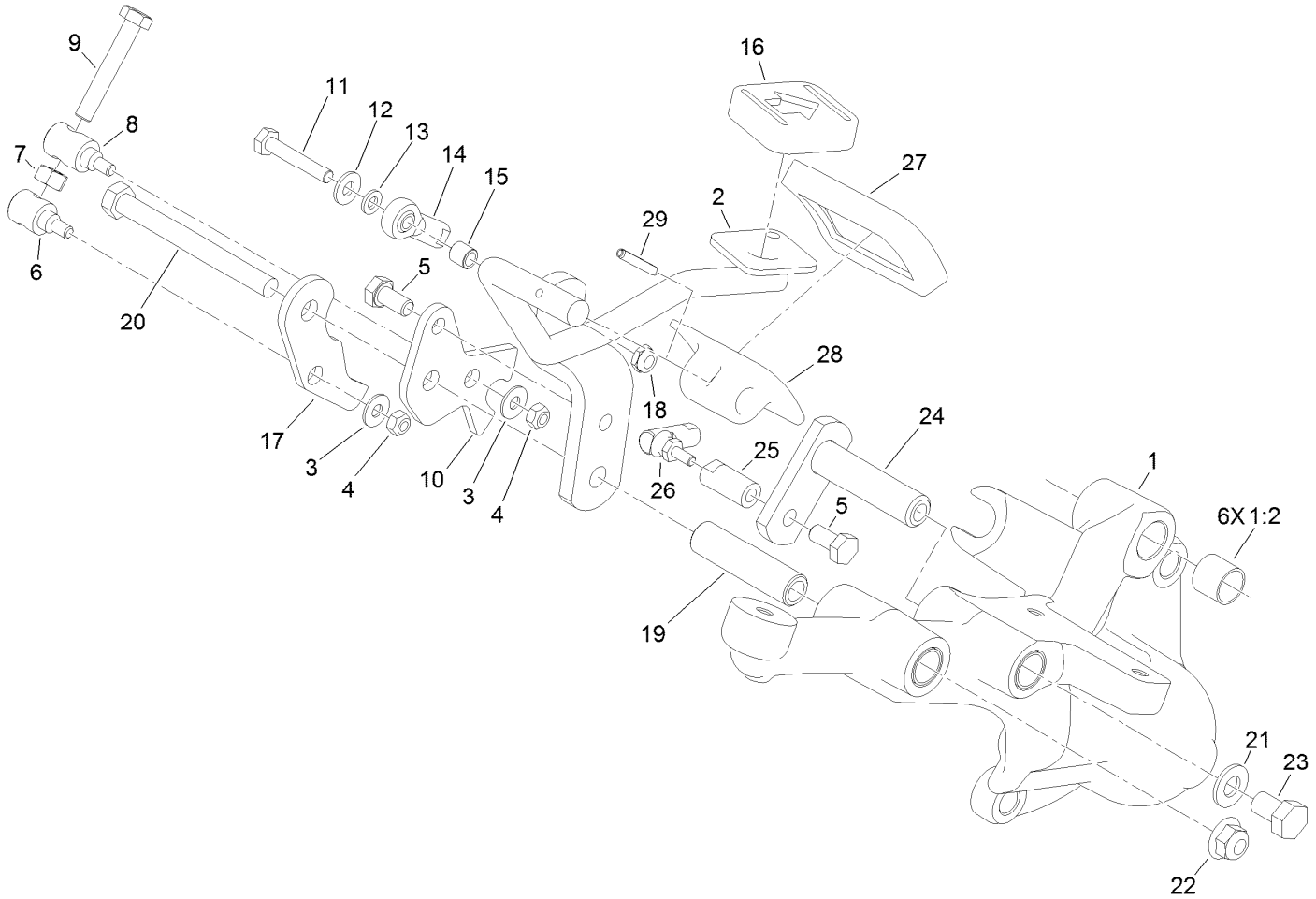

Right Hand Support Platform Assembly

Ref.	Part Number	Qty.	Description
1	117-9019	1	Support-Platform, RH
1:2	256-311	6	Bushing-Split
2	119-1725-01	1	Rod-Traction
3	3256-1	2	Washer-Flat
4	33023-00	2	Nut-Lock
5	33114-016	2	Screw-HH
6	94-1374	1	Trunnion-Bracket, Mow
7	33014-00	1	Nut-Hex
8	94-1375	1	Trunnion-Bracket, Lock
9	94-3489	1	Screw-HH
10	117-9021	1	Bracket-Lock
11	321-9	1	Screw-HH
12	3256-22	1	Washer-Flat
13	33093-00	1	Washer-Flat
14	2411-41	1	Rod End-Ball Joint

Ref.	Part Number	Qty.	Description
15	99-3545	1	Spacer
16	74-9110	1	Pad-Pedal, Reverse
17	119-9315	1	Bracket-Mow
18	3296-56	1	Nut-Lock, NI
19	94-1371	1	Spacer
20	323-42	1	Screw-HH
21	3256-24	1	Washer-Flat
22	104-8301	1	Nut-Flange, NI
23	33115-016	1	Screw-HH
24	94-1300	1	Lock-Neutral
25	94-1386	1	Shaft-Pedal
26	2411-38	1	Joint-Ball
27	74-9100	1	Pad-Pedal, Forward
28	117-9507	1	Pedal-Accelerator
29	32121-45	1	Pin-Spring

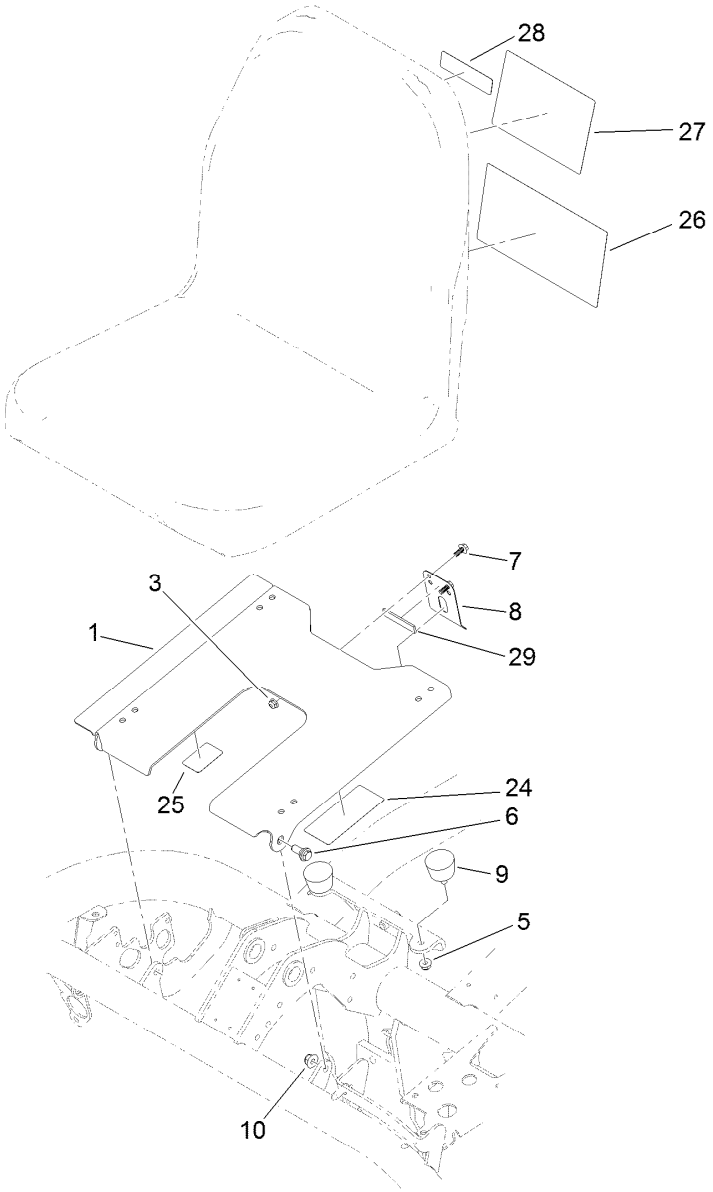

Seatbase Assembly

Ref.	Part Number	Qty.	Description
1	117-4440-03	1	Plate-Seat
3	104-7201	2	Nut-Flange, NI
5	104-8300	2	Nut-Flange, NI
6	94-7582	2	Bolt-Shoulder
7	99-6810	2	Screw-HHF
8	66-2630	1	Latch-Seat
9	68-3270	2	Bumper-Rubber
10	104-8301	2	Nut-Flange, NI
24	115-8201	1	Decal-Fuse Reference Diesel
25	115-8203	1	Decal-Reference, Fuse (Radiator Fan)
26	115-8170	1	Decal-Service, Spanish
26	115-8171	1	Decal-Service, French

Ref.	Part Number	Qty.	Description
26	115-8172	1	Decal-Service, German
26	115-8173	2	Decal, Service, Swedish
26	115-8174	1	Decal-Service, Italian
26	115-8175	1	Decal-Service, Portuguese
26	115-8176	1	Decal-Service, Norwegian
26	115-8177	1	Decal-Service, Finnish
26	115-8178	1	Decal-Service, Danish
26	115-8179	1	Decal-Service, Dutch
26	115-8180	1	Decal-Service, Japanese
26	119-9343	1	Decal-Aid, Quick Reference
27	115-8156	1	Decal-Speed, Clip
28	117-2718	1	Decal-Arrester, Spark
29	120-5753	1	Strip-Foam

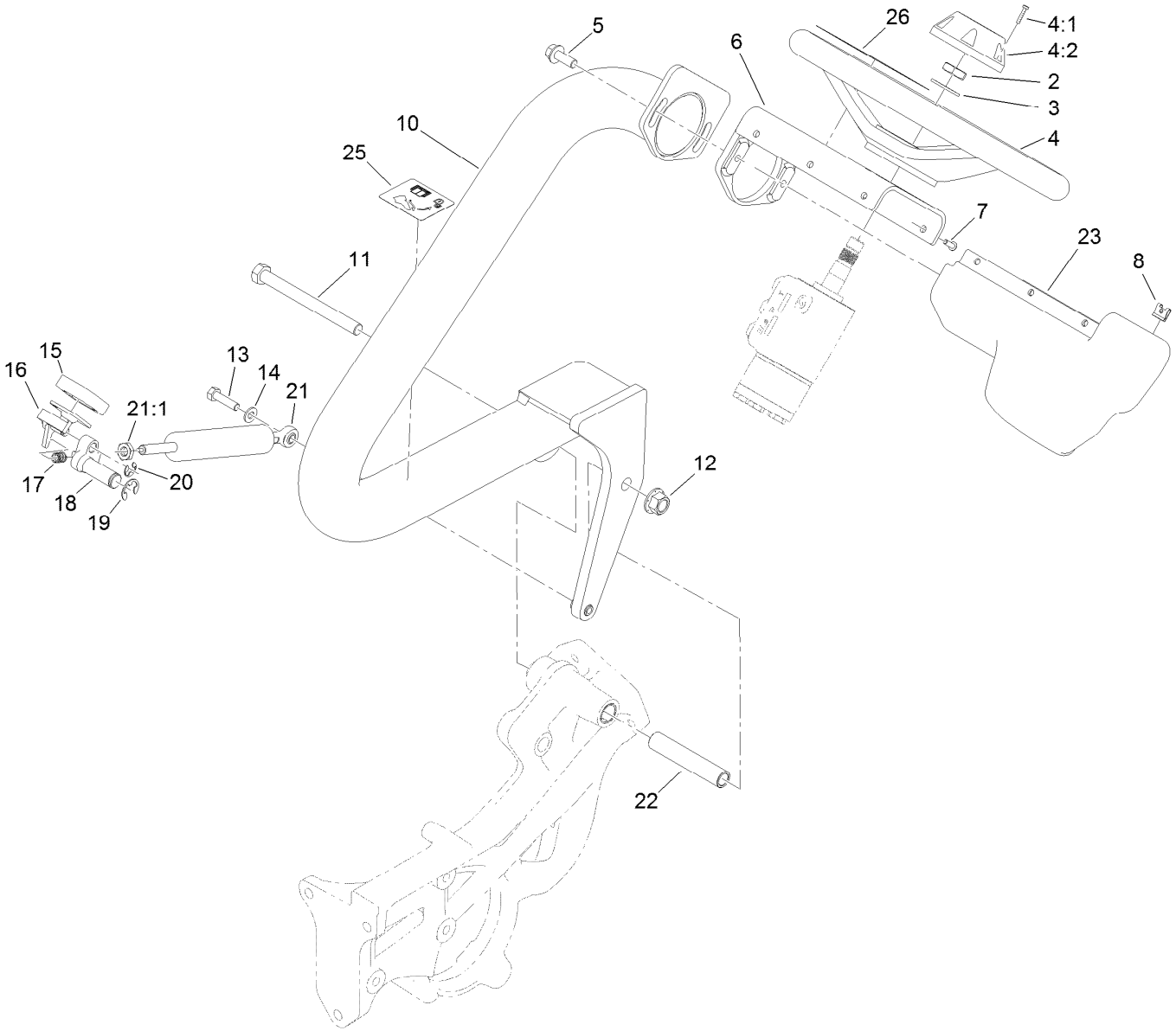

Steering Arm and Adjuster Assembly

Ref.	Part Number	Qty.	Description
2	3296-33	1	Nut-Lock, NI
3	3256-27	1	Washer-Flat
4	75-0560	1	Steering Wheel ASM
4:1	32144-21	1	Screw
4:2	68-5140	1	Cap-Wheel, Steering
5	3234-42	2	Screw-HHF
6	117-9346-03	1	Mount-Steering
7	3274-39	6	Screw-HSBH
8	3290-277	6	Nut-Speed
10	117-4444-01	1	Arm-Steering
11	325-22	1	Screw-HH
12	99-5107	1	Nut-Lock
13	322-47	1	Screw-HH
14	3256-23	1	Washer-Flat

Ref.	Part Number	Qty.	Description
15	74-9110	1	Pad-Pedal, Reverse
16	117-4457	1	Lever ASM
17	106-9791	1	Spring
18	117-9024	1	Lever-Pivot
19	32120-19	1	E-Ring
20	105-7004	1	E-Ring
21	117-4447	1	Cylinder-Gas
21:1	112-8617	1	Nut-Hex
22	117-9002	1	Spacer
23	119-9300	1	Cover-Valve, Steering
25	119-9346	1	Decal-Arm, Steering
26	117-9536	1	Decal-Danger
26	117-9537	1	Decal-Danger, Ce

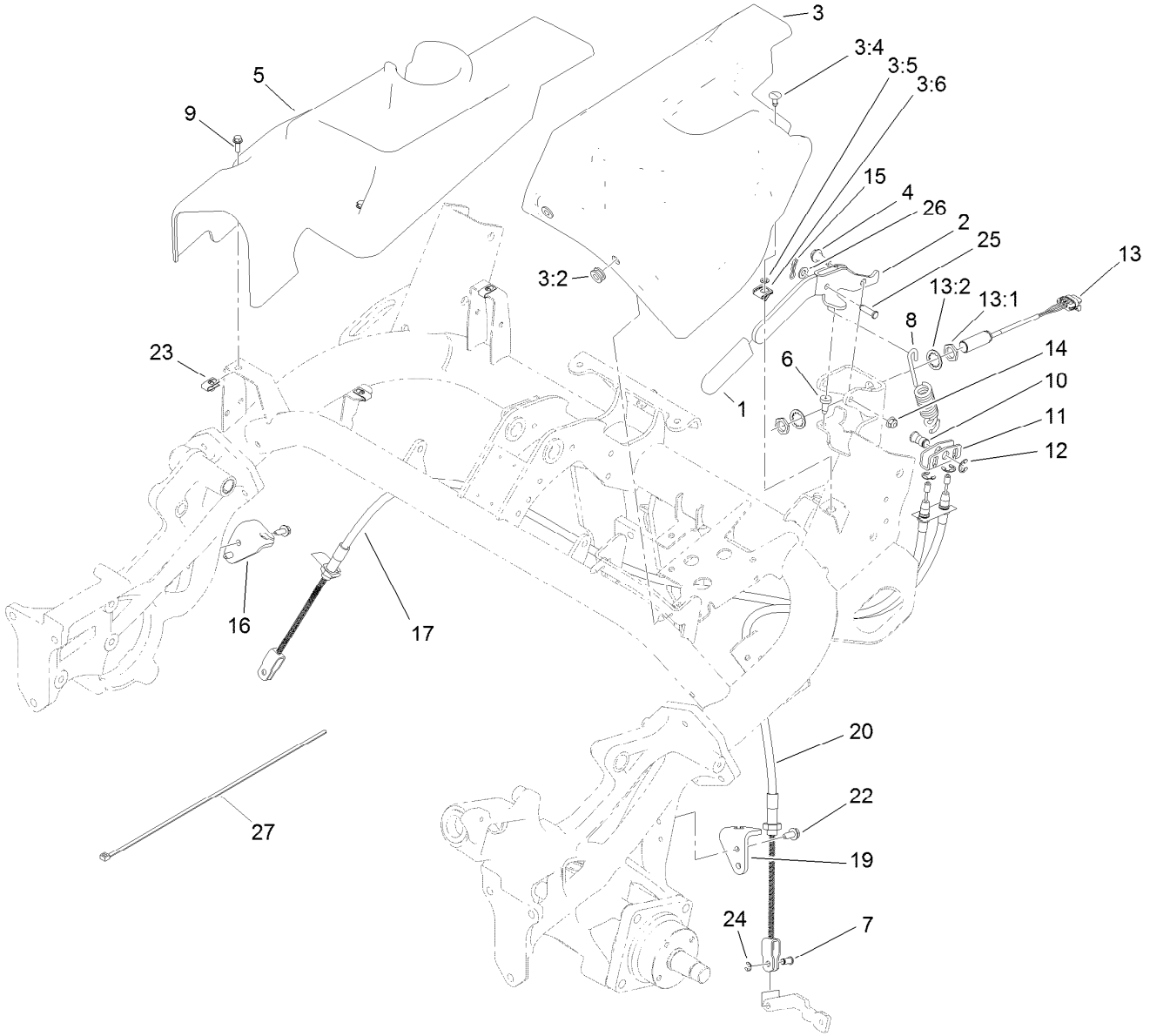

Brake Cable and Lever Assembly

Ref.	Part Number	Qty.	Description
1	21-1880	1	Grip-Handle
2	119-2149-03	1	Lever-Brake
3	119-1731	1	LH Cover ASM
3:2	92-5972	2	Grommet-Rubber
3:4	119-1728	1	Stud-1/4 Turn
3:5	119-1729	1	Retainer-Stud
3:6	119-1730	1	Receptacle-Clip, Mini
4	116-1297	2	Screw-Shoulder
5	119-1678	1	Cover-Side, RH
6	87-8460	1	Bumper-Rubber
7	109-6887	2	Pin-Clevis
8	119-2144	1	Spring-Extention
9	115-5103	3	Screw-HHF
10	119-2146	1	Pin
11	114-9994	1	Bracket-Equalizer, Cable
12	32120-47	3	Ring-Retaining, External

Ref.	Part Number	Qty.	Description
13	115-5300	1	Proximity Switch ASM
13:1	117-3207	2	Nut-Hex
13:2	117-3208	2	Washer-Lock, Internal Tooth
14	104-8300	2	Nut-Flange, NI
15	119-1415	1	Pin-Cotter, Locking
16	115-5787	1	Bracket-Brake Cable, RH
17	115-9412	1	Cable-Brake, RH
19	114-9997	1	Bracket-Brake Cable, LH
20	114-9996	1	Cable-Brake, LH
22	32104-32	4	Screw-HWH
23	107069	3	Clip
24	701197	2	E-Ring
25	283-61	1	Pin-Yoke
26	3256-23	1	Washer-Flat
27	3290-379	1	Tie-Cable

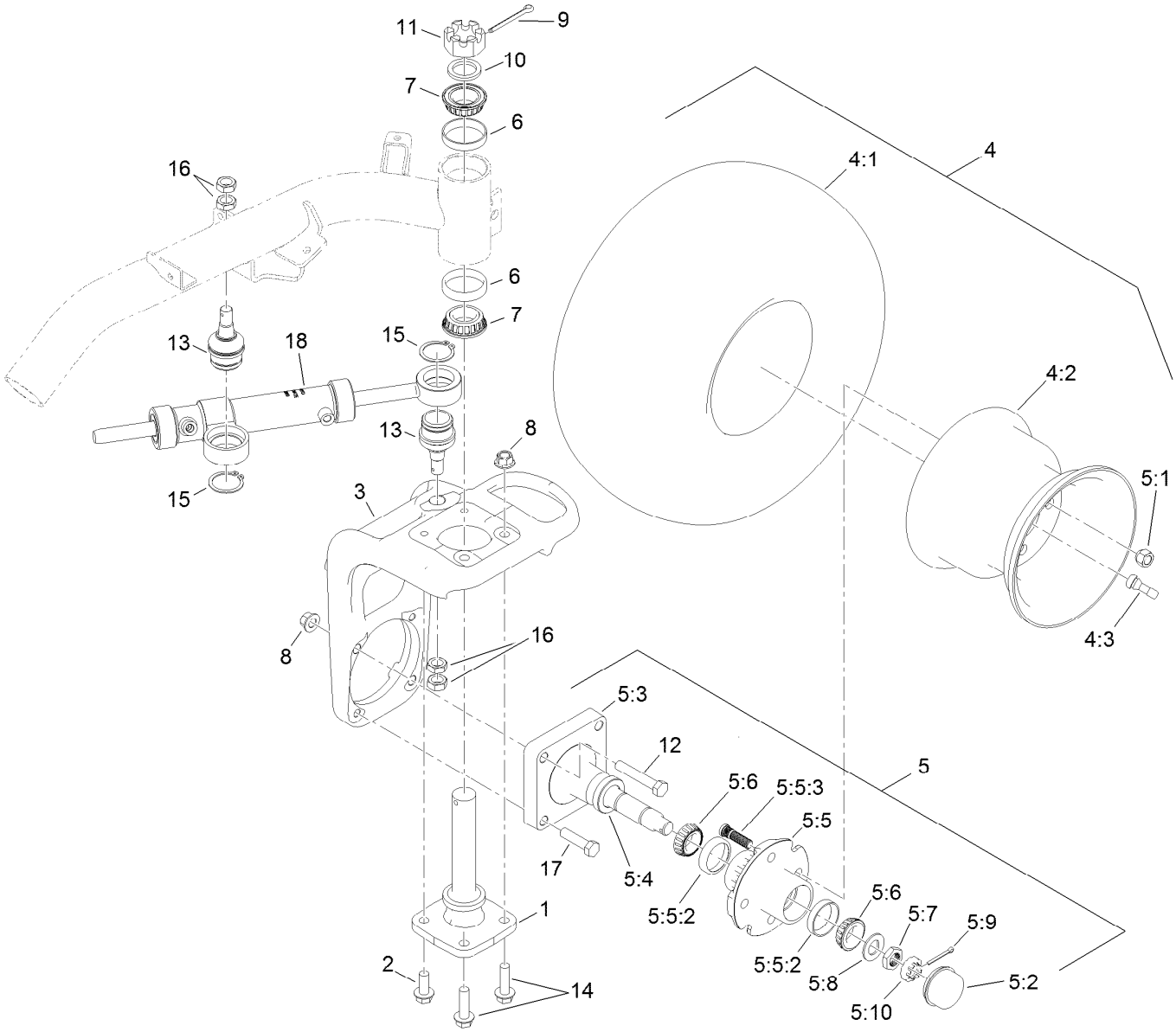

Back Wheel Assembly

Ref.	Part Number	Qty.	Description
1	115-2657	1	Spindle-Steering
2	3234-38	2	Screw-HHF
3	117-4366-01	1	Base-Fork, Rear
4		1	Wheel And Tire ASM ●
4:1	117-9031	1	Tire
4:2	217-60	1	Rim
4:3	232-27	1	Stem-Valve
5	119-4490	1	Wheel Spindle ASM
5:1	242-50	4	Nut-Lug
5:2	241-119	1	Cap-Dust
5:3	112-7173	1	Spindle
5:4	112-1690	1	Seal-Oil
5:5	117-9093	1	Hub ASM
5:5:2	254-72	2	Bearing-Cup, Tapered
5:5:3	114-3918	4	Stud-Wheel
5:6	254-94	2	Bearing-Cone, Tapered
5:7	117-8260	1	Nut

Ref.	Part Number	Qty.	Description
5:8	117-8259	1	Washer-Spindle
5:9	3272-18	1	Pin-Cotter
5:10	93-0307	1	Nut-Lock, Retainer
6	115-9471	2	Bearing-Cup
7	115-9472	2	Bearing-Cone And Seal
8	99-5107	4	Nut-Lock
9	3272-37	1	Pin-Cotter
10	18-6320	1	Washer-Steering
11	32136-9	1	Nut-Hex, Slotted
12	325-12	2	Screw-HH
13	117-9875	2	Joint-Ball
14	3234-22	2	Screw-HHF
15	32151-104	2	Ring-Retaining, External
16	3220-6	4	Nut-Jam
17	325-8	2	Screw-HH
18	117-4480	1	HYD Cylinder ASM

● Not serviced separately

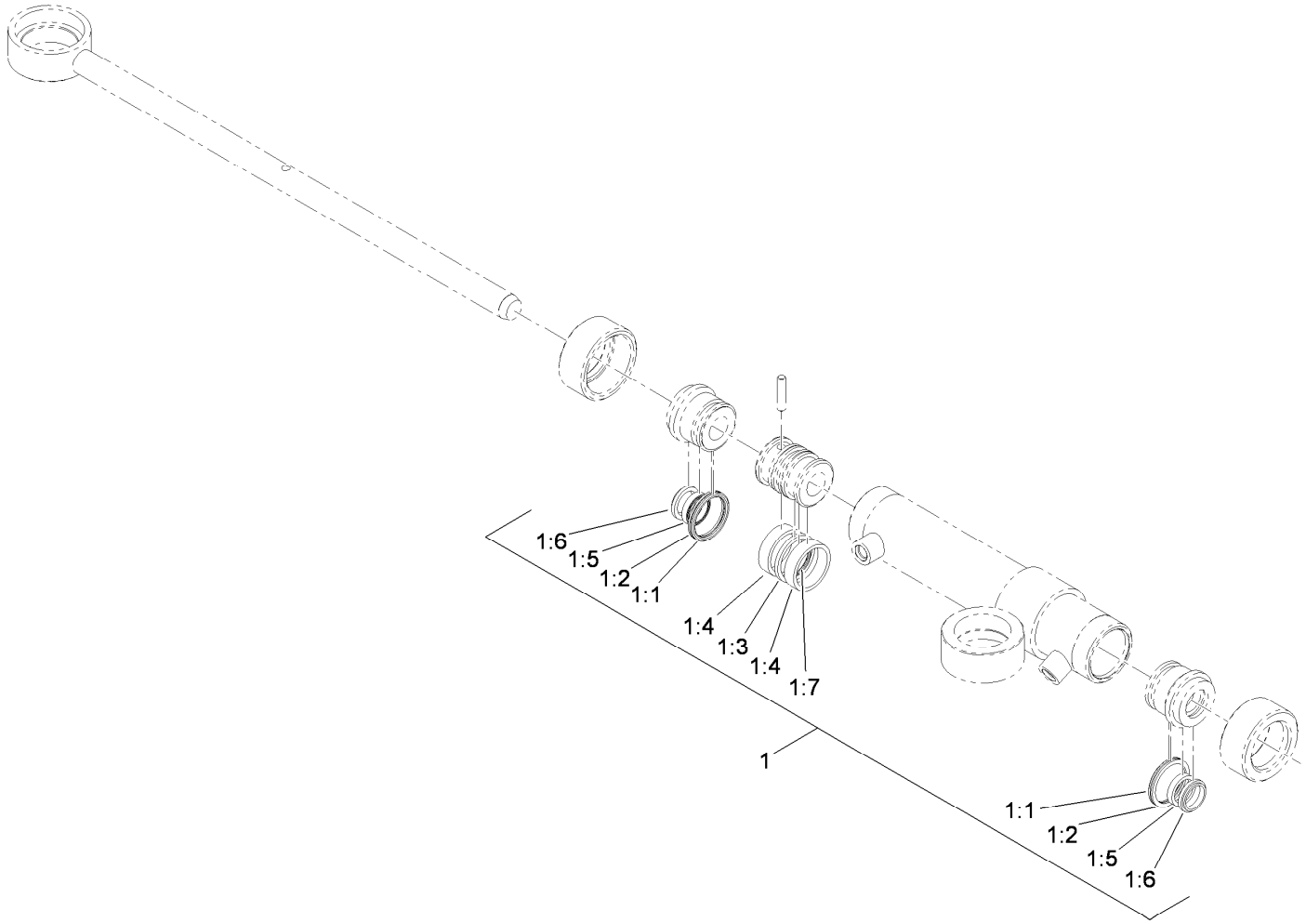

Hydraulic Cylinder Assembly No. 117-4480

Ref.	*Part Number*	*Qty.*	*Description*
1	119-7124	1	Kit-Seal
1:1		2	Ring-Retaining ●
1:2		2	Ring-Backup ●
1:3		1	Seal-Psp ●
1:4		2	Ring-Wear ●
1:5		2	Seal-Bs ●
1:6		2	Seal-Dust ●
1:7		1	Ring-Retaining ●

● Not serviced separately

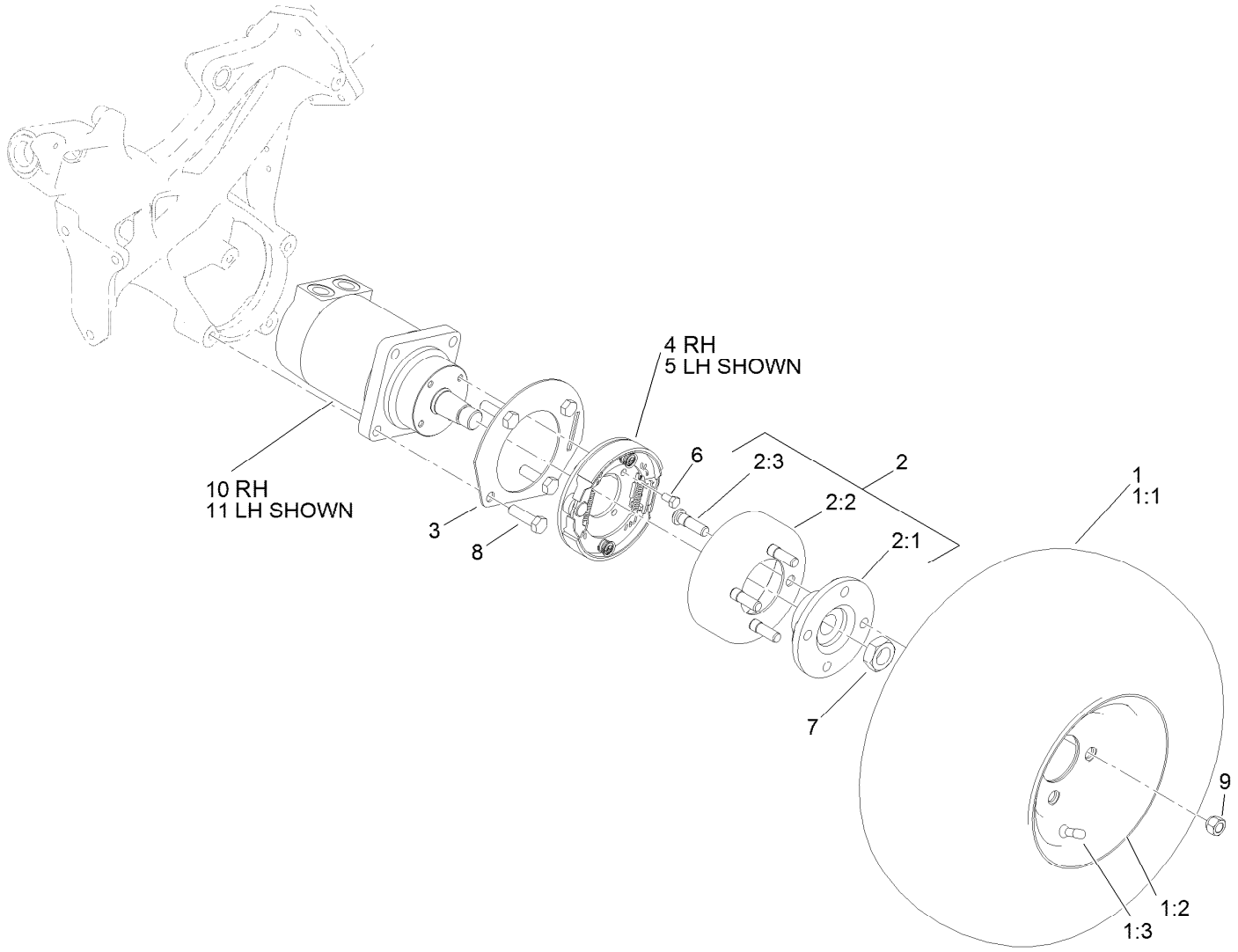

Front Wheel Assembly

Ref.	Part Number	Qty.	Description
1		2	Wheel And Tire ASM ●
1:1	117-9031	1	Tire
1:2	117-9032	1	Rim
1:3	232-27	1	Stem-Valve
2	115-2661	2	Brake Drum ASM
2:1	115-2662-03	1	Hub-Wheel
2:2	115-2663	1	Drum-Brake
2:3	85-6540	4	Stud-Drive
3	114-9998-03	2	Tab-Lever, Brake

Ref.	Part Number	Qty.	Description
4	115-9441	1	RH Brake ASM
5	115-9440	1	LH Brake ASM
6	322-2	8	Screw-HH
7	26-3790	2	Nut-Lock
8	325-7	8	Screw-HH
9	242-50	8	Nut-Lug
10	117-4302	1	RH Wheel Motor ASM
11	117-4303	1	LH Wheel Motor ASM

● Not serviced separately

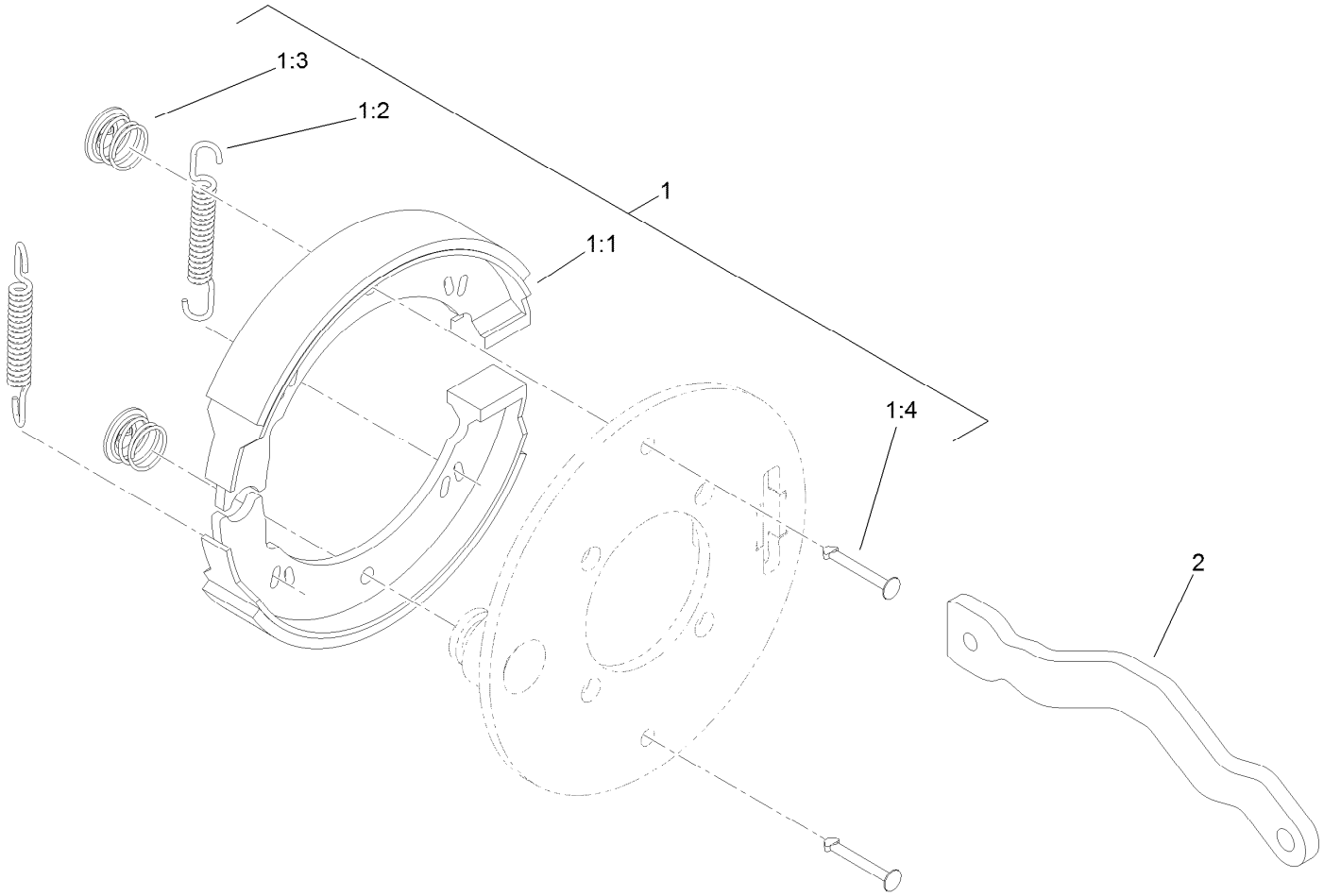

Right Hand Brake Assembly No. 115-9441

Ref.	*Part Number*	*Qty.*	*Description*
1	119-7136	1	Kit-Brake
1:1		2	Shoe-Brake ●
1:2		2	Spring ●
1:3		2	Clip ●
1:4		2	Pin-Retainer ●
2	115-5789	1	Lever-Brake, RH

● Not serviced separately

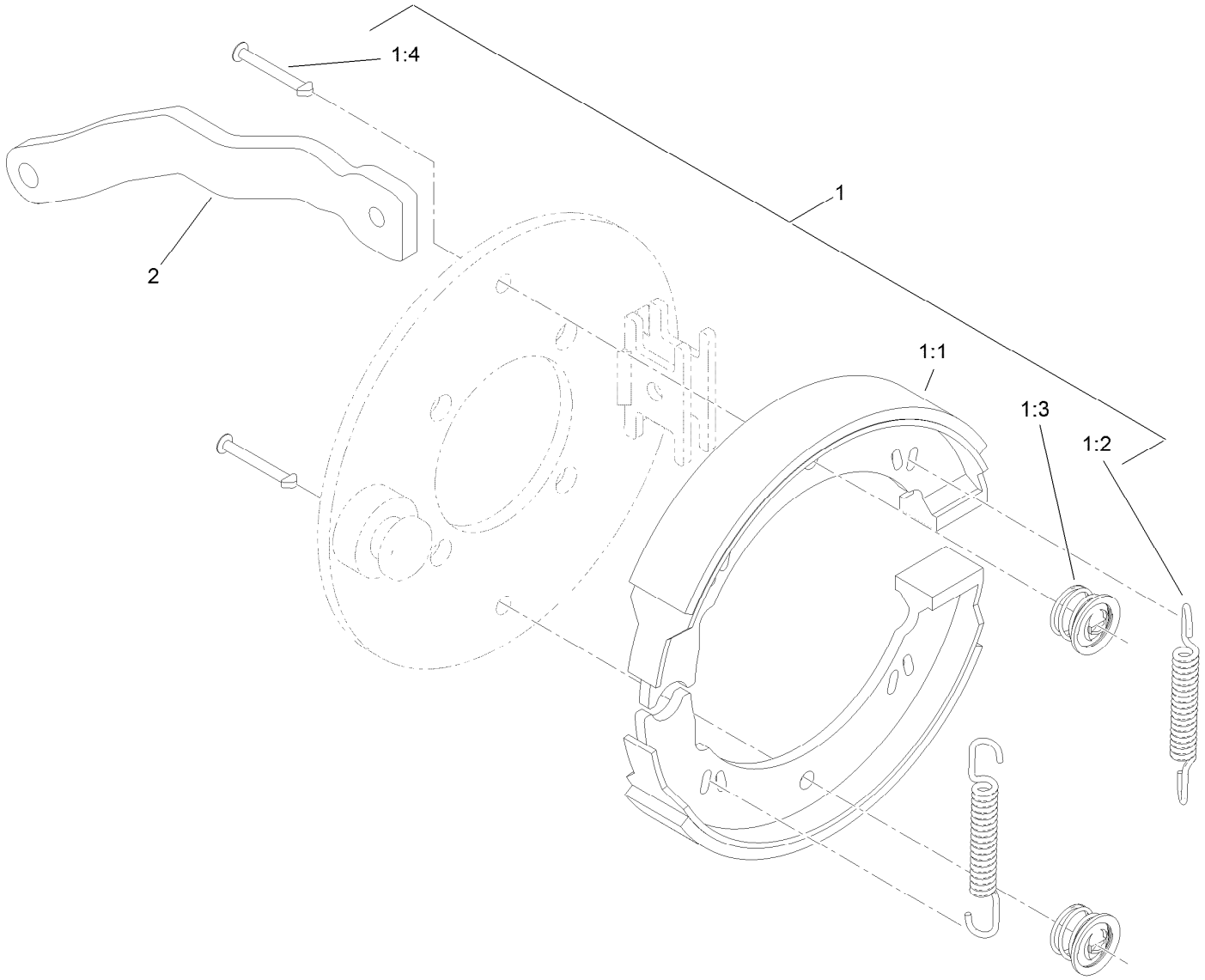

Left Hand Brake Assembly No. 115-9440

Ref.	*Part Number*	*Qty.*	*Description*
1	119-7136	1	Kit-Brake
1:1		2	Shoe-Brake ●
1:2		2	Spring ●
1:3		2	Clip ●
1:4		2	Pin-Retainer ●
2	115-2664	1	Lever-Brake, LH

● Not serviced separately

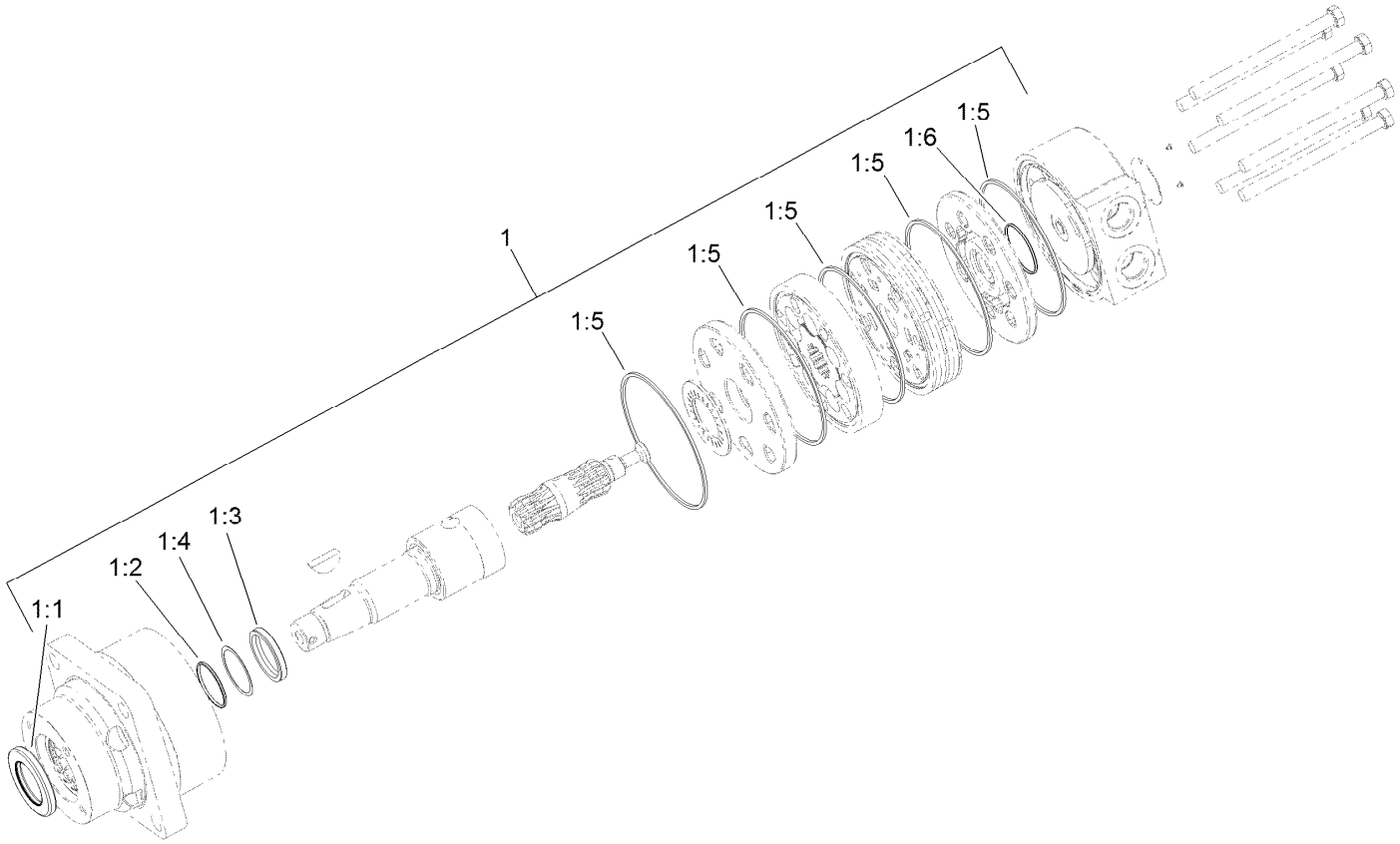

Right Hand Wheel Motor Assembly No. 117-4302

Ref.	*Part Number*	*Qty.*	*Description*
1	94-8178	1	Seal Kit
1:1		1	Seal-Dirt And Water ●
1:2		1	Backup-Ring ●
1:3		1	Seal-Shaft ●
1:4		1	Washer-Backup ●
1:5		5	Seal-Square, Ring (Inner) ●
1:6		1	Seal-Commutator ●

● Not serviced separately

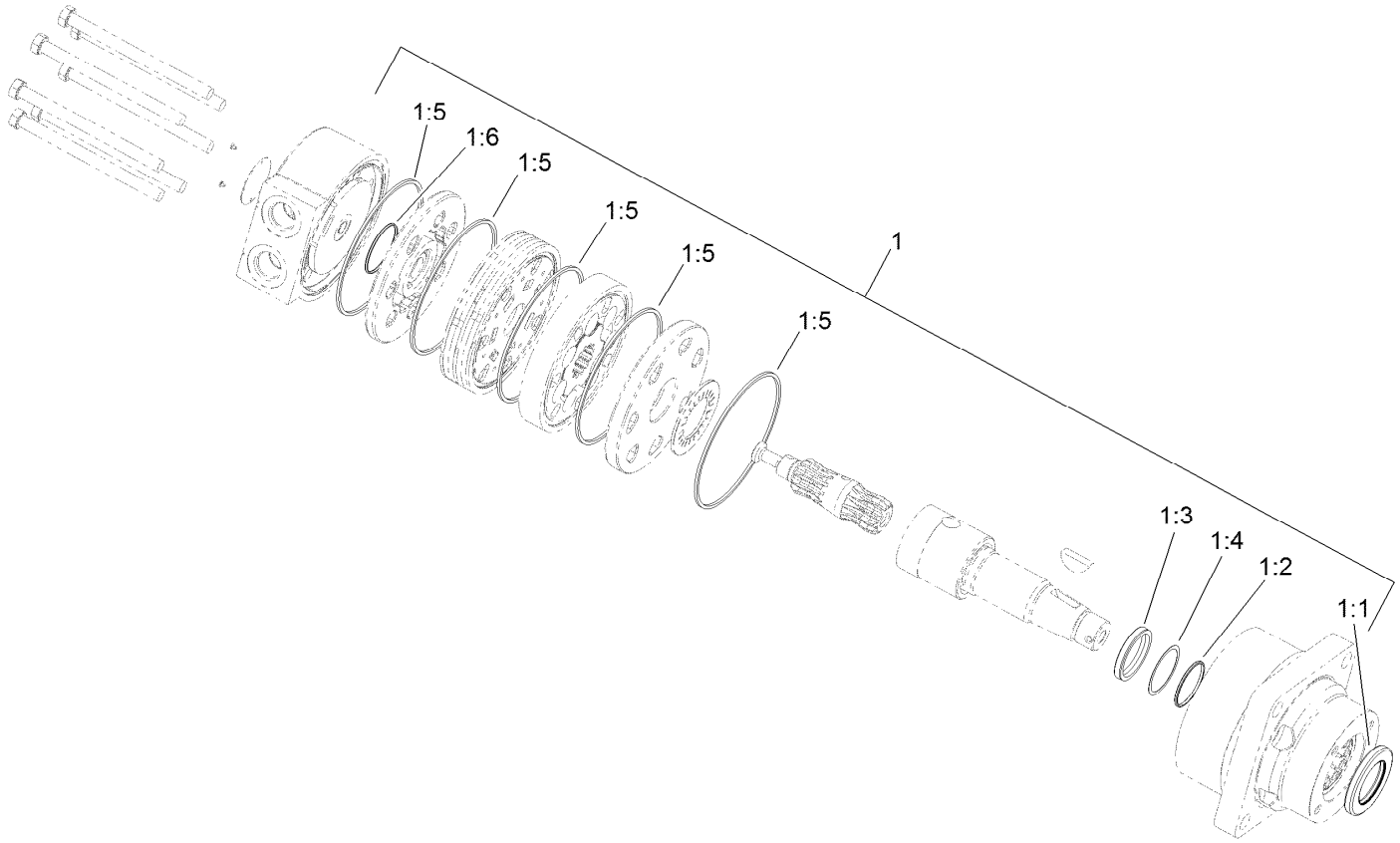

Left Hand Wheel Motor Assembly No. 117-4303

Ref.	*Part Number*	*Qty.*	*Description*
1	94-8178	1	Seal Kit
1:1		1	Seal-Dirt And Water ●
1:2		1	Backup-Ring ●
1:3		1	Seal-Shaft ●
1:4		1	Washer-Backup ●
1:5		5	Seal-Square, Ring (Inner) ●
1:6		1	Seal-Commutator ●

● Not serviced separately

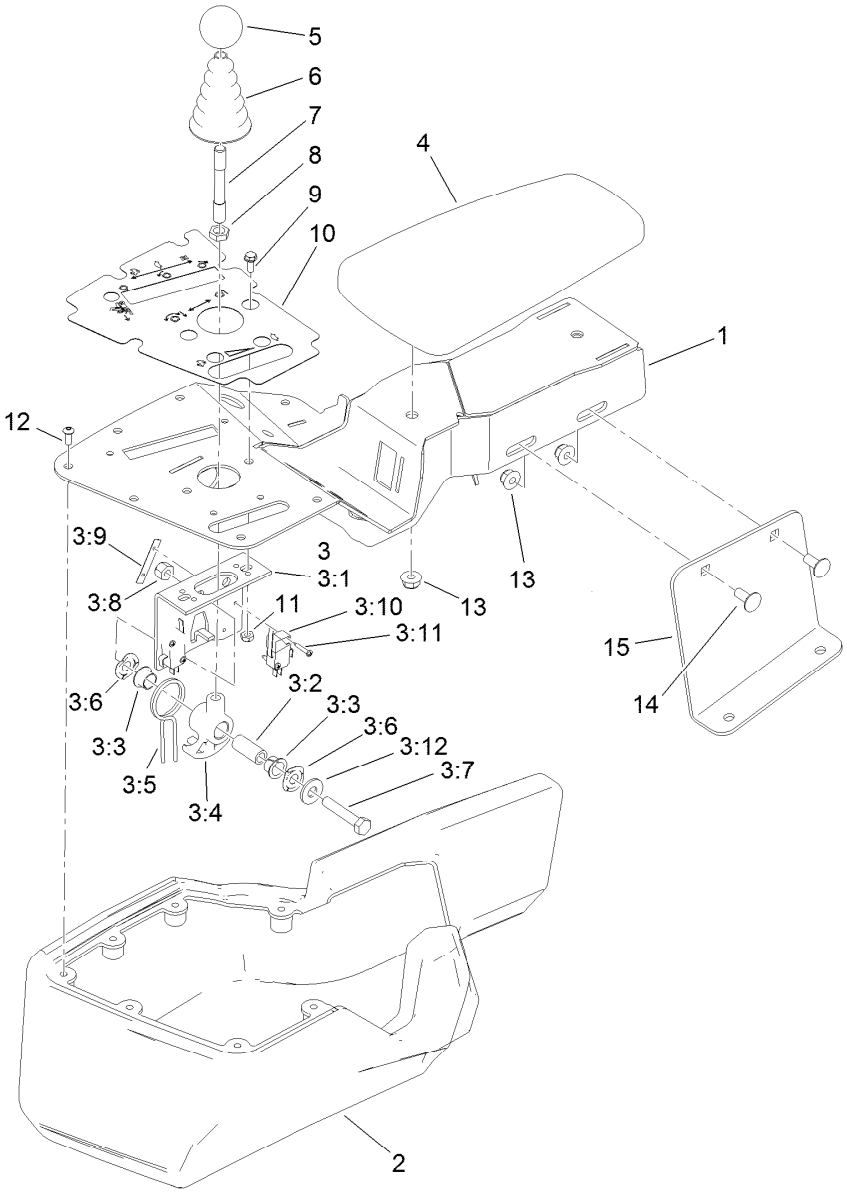

Console and Reel Control Assembly

Ref.	Part Number	Qty.	Description
1	115-9804-03	1	Cover
2	115-9798	1	Cover-Console
3	106-4167	1	Joystick Bracket ASM
3:1	115-5357-03	1	Bracket-Joystick
3:2	106-4192	1	Spacer
3:3	93-5547	2	Bushing-Nylon
3:4	105-7507	1	Hub-Pivot, Joystick
3:5	105-8289	1	Spring-Torsion
3:6	106-4193	2	Washer-Finger, Spring
3:7	322-9	1	Screw-HH
3:8	3296-29	1	Nut-Lock, NI
3:9	3290-354	2	Nut-Speed
3:10	108-6496	2	Switch (W/Boot)
3:11	95-3003	4	Screw-PPHTF

Ref.	Part Number	Qty.	Description
3:12	3256-3	1	Washer-Flat
4	108-7602	1	Rest-Arm
5	120-9752	1	Knob-Round, Yellow
6	93-5961	1	Boot-Lever
7	105-8288	1	Rod-Joystick
8	3218-3	1	Nut-Jam
9	3290-321	2	Screw-HWH
10	119-1657	1	Decal-Console
11	3296-12	2	Nut-Lock, NI
12	115-9830	7	Screw-HSBH
13	104-8300	4	Nut-Flange, NI
14	3230-23	2	Screw-CARR
15	119-7121-03	1	Bracket-Shipping

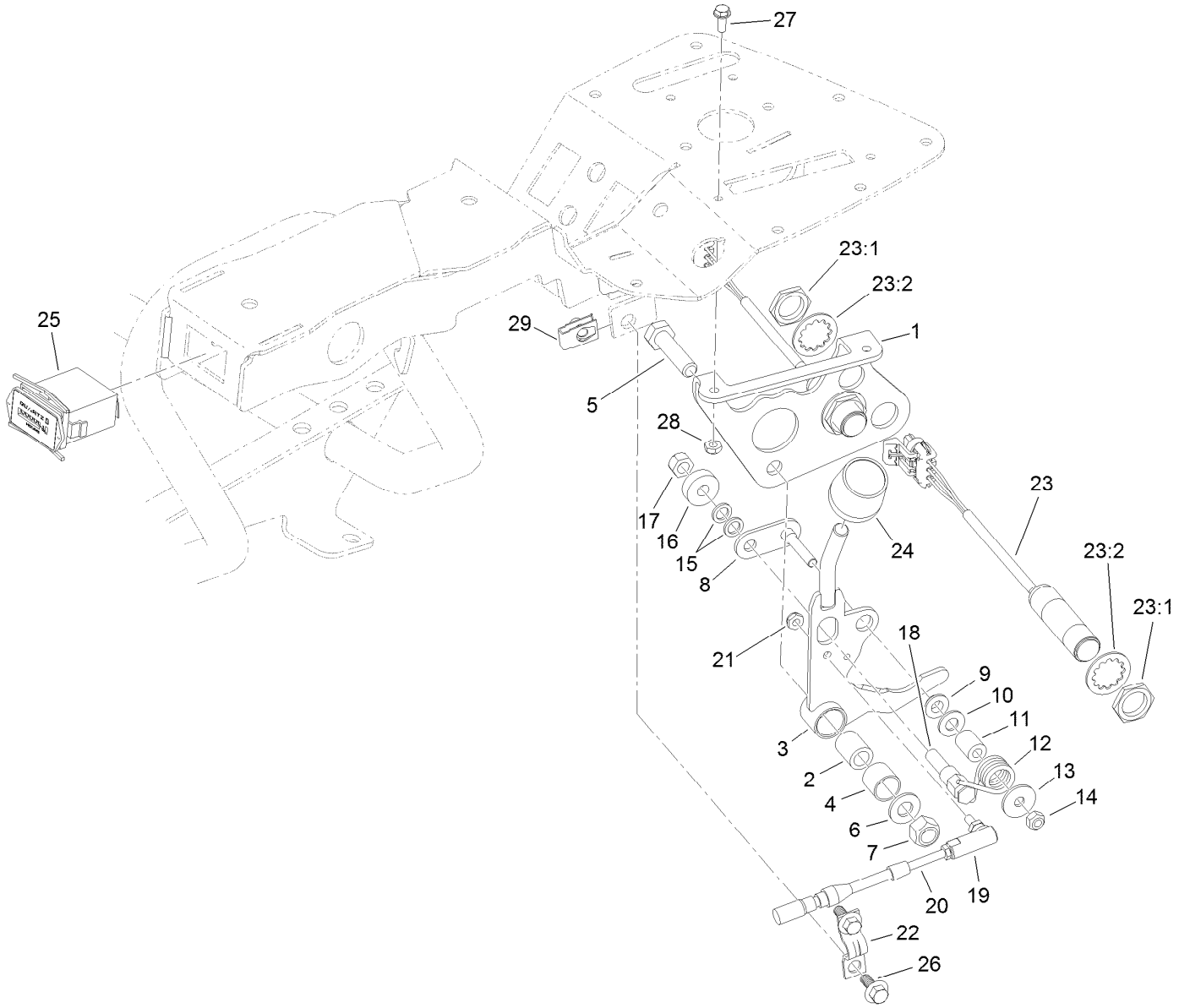

Traction Interface Control Assembly

Ref.	Part Number	Qty.	Description
1	115-9774-03	1	Bracket-Function, Lever
2	94-1378	1	Tube-Pivot, Handle
3	115-9772	1	Handle ASM
4	256-311	1	Bushing-Split
5	33115-040	1	Screw-HH
6	3256-24	1	Washer-Flat
7	33025-00	1	Nut-Lock, NI
8	94-9614	1	Pivot-Roller
9	94-9619	1	Bushing
10	3256-23	1	Washer-Flat
11	94-9618	1	Spacer-Spring
12	94-9620	1	Spring-Torsion
13	3256-67	1	Washer-Flat
14	33023-00	1	Nut-Lock
15	75-5470	2	Spacer-Bearing
16	251-259	1	Bearing-Ball
17	33024-00	1	Nut-Lock, NI
18	94-9617	1	Pin-Spring
19	2411-38	1	Joint-Ball
20	115-8247	1	Cable-Lock, Neutral
21	3296-27	1	Nut-Lock, NI
22	93-2279	1	Clamp-Cable
23	115-5300	2	Proximity Switch ASM
23:1	117-3207	2	Nut-Hex
23:2	117-3208	2	Washer-Lock, Internal Tooth
24	120-9753	1	Knob-Cylindrical, Orange
25	1-513374	1	Meter-Hour
26	99-6810	2	Screw-HHF
27	3290-321	2	Screw-HWH
28	3296-12	2	Nut-Lock, NI
29	107069	2	Clip

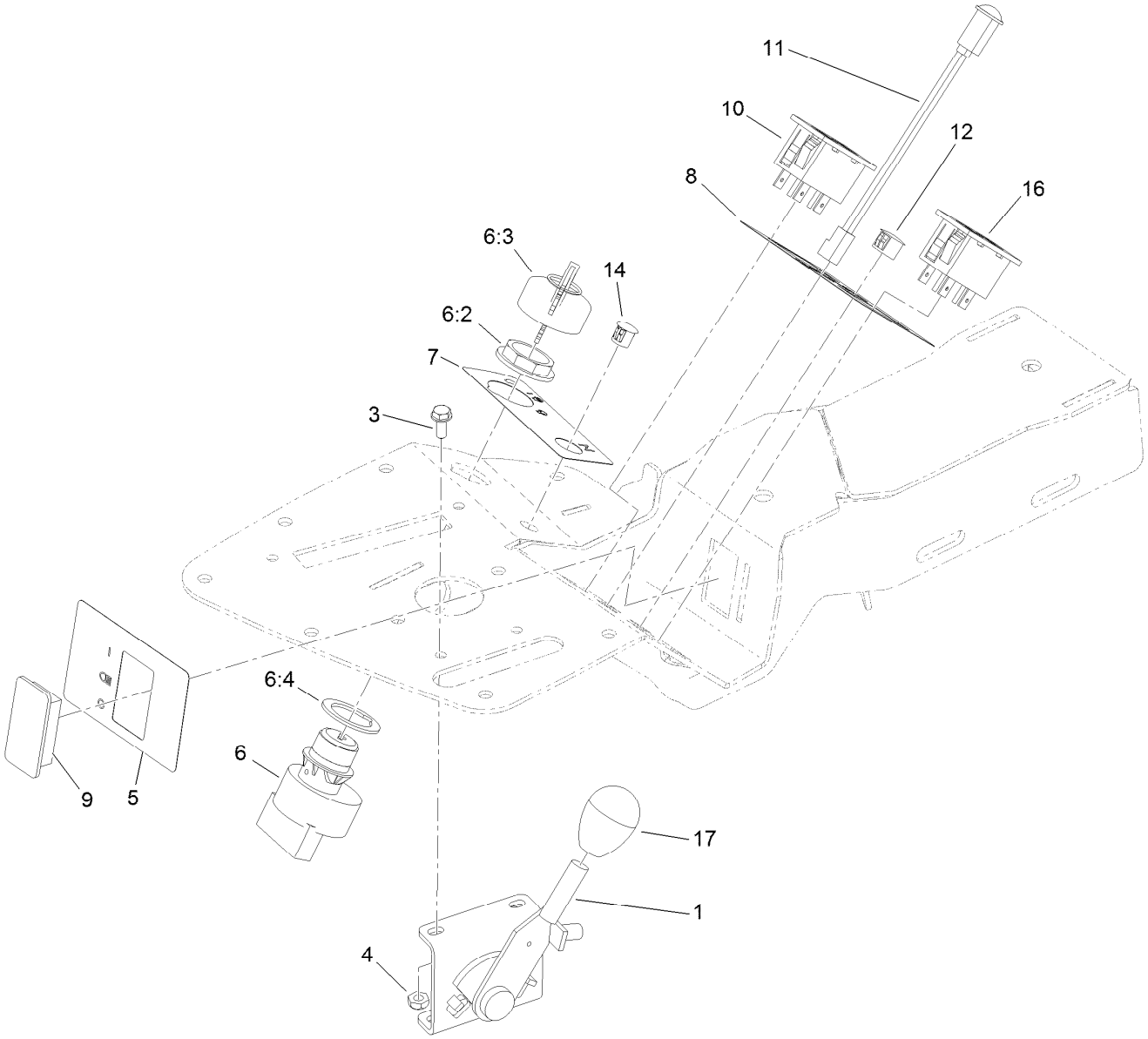

Ignition, Throttle and Choke Control Assembly

Ref.	Part Number	Qty.	Description
1	119-1662	1	Throttle ASM
3	3290-321	2	Screw-HWH
4	3296-12	2	Nut-Lock, NI
5	119-1687	1	Decal-Lights
6	106-5269	1	Ignition Switch ASM
6:2	108-8660	1	Nut-Mounting
6:3	106-5270	1	Ignition Key Set
6:4	108-8659	1	Washer-Backup
7	119-1688	1	Decal-Ignition, Console

Ref.	Part Number	Qty.	Description
8	119-1658	1	Decal-Diagnostic, Console
9	99-7420	1	Plug-Hole
10	100-8071	1	Lamp-Warning
11	95-7652	1	Light-Indicator
12	2410-64	1	Plug-Button
14	104-9368	1	Plug-Dome
16	100-8070	1	Lamp-Warning
17	120-9751	1	Knob-Oval, Black

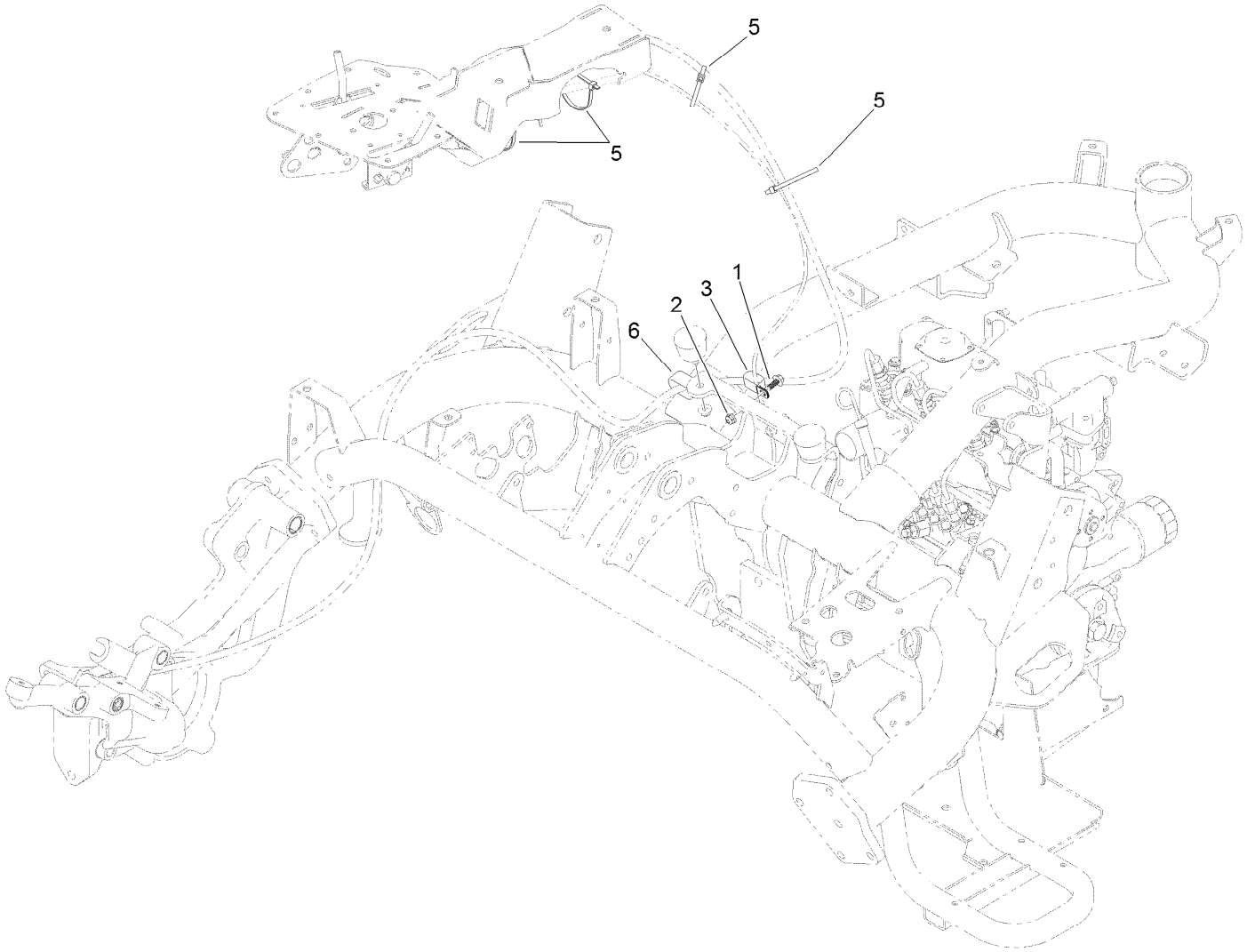

Console Cable Routing Assembly

Ref.	*Part Number*	*Qty.*	*Description*
1	99-6810	1	Screw-HHF
2	104-7201	1	Nut-Flange, NI
3	119-8153	1	Clamp-R, Double Tube
5	3290-379	4	Tie-Cable
6	120-1959	1	Clamp-R, Double

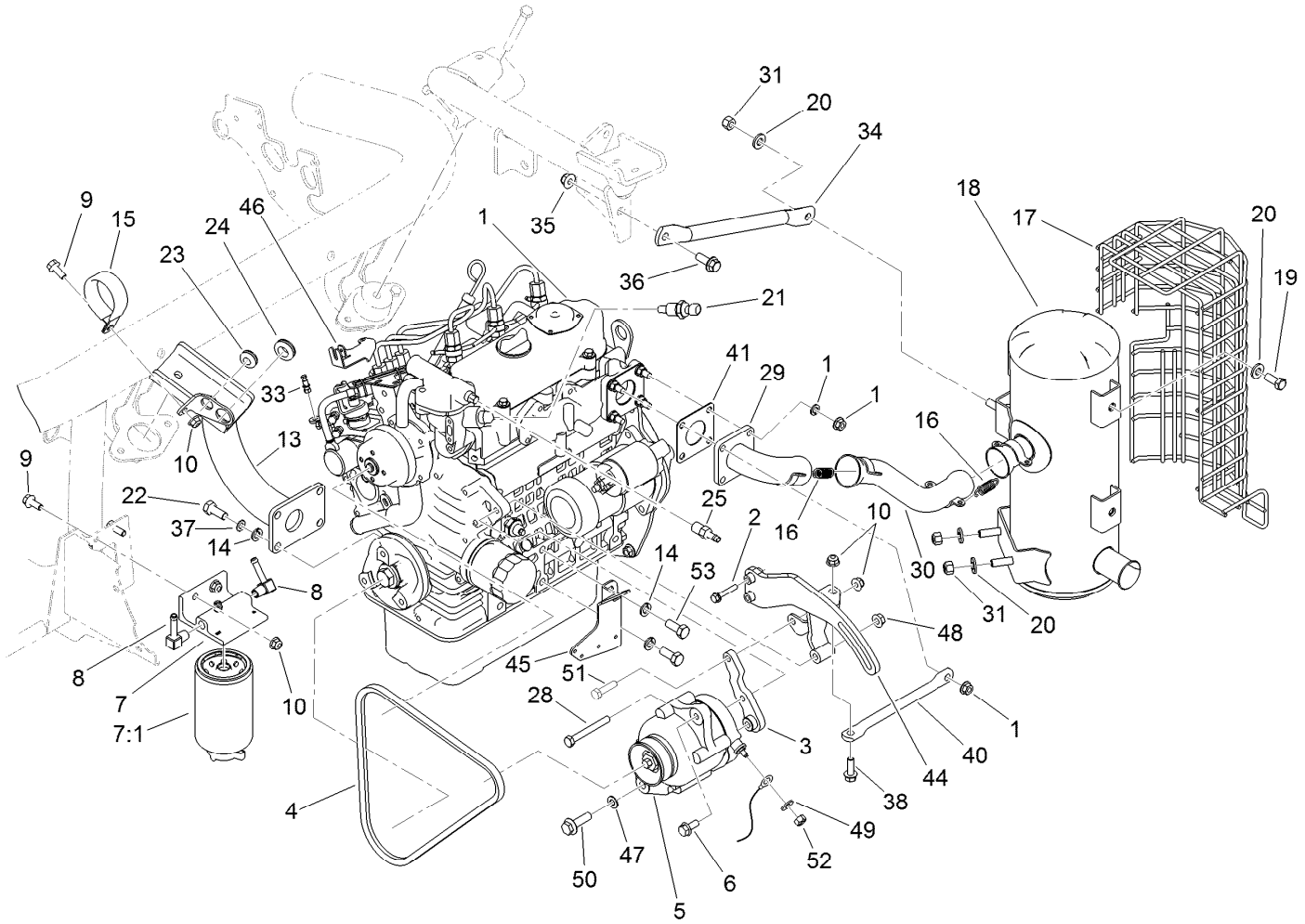

Engine and Exhaust Assembly

Ref.	Part Number	Qty.	Description
1	119-2141	1	Engine ASM
2	33103-035	2	Screw-HHF
3	119-4428-03	1	Bracket-Alternator
4	119-4486	1	Belt-V, Fan
5	117-5541	1	60 Amp Alternator ASM
6	33104-020	1	Screw-HHF
7	110-9044	1	Separator-Filter
7:1	110-9049	1	Filter-Spin On
8	353-707	2	Fitting-HYD, 90 DEG
9	3234-47	2	Screw-HHF
10	104-8300	5	Nut-Flange, NI
13	119-2128-03	1	Support-Engine
14	42-9600	6	Washer-Lock, Spring
15	115-9469	1	Clamp-R
16	104-6478	4	Spring-Extension
17	115-8718-03	1	Shield-Muffler
18	120-1950	1	Muffler ASM
19	323-5	4	Screw-HH
20	100-4852	8	Washer-Hardened
21	119-4478	1	Sender-Temperature
22	43-0090	4	Screw-HH

Ref.	Part Number	Qty.	Description
23	1-633630	1	Grommet
24	237-124	2	Grommet
25	353-783	1	Fitting-Straight
28	119-8194	1	Screw-HH
29	114-8009	1	Exhaust Plate ASM
30	114-8013	1	Exhaust Pipe ASM
31	32152-2	4	Nut-Lock, Cone
33	108-5928	1	Swivel-Stop, Cable
34	120-1956-03	1	Tube-Brace
35	104-8301	1	Nut-Flange, NI
36	3234-42	1	Screw-HHF
37	3255-8	1	Washer-Lock
38	3234-29	2	Screw-HHF
40	120-1961-03	1	Tube-Brace
41	99-8343	1	Gasket-Muffler
44	119-8182-03	1	Bracket-Alternator
45	120-1964-03	1	Bracket-Harness
46	108-5922	1	Bracket-Support, Throttle
47	3256-23	1	Washer-Flat
48	33004-00	1	Nut-HF
49	3256-2	1	Washer-Flat

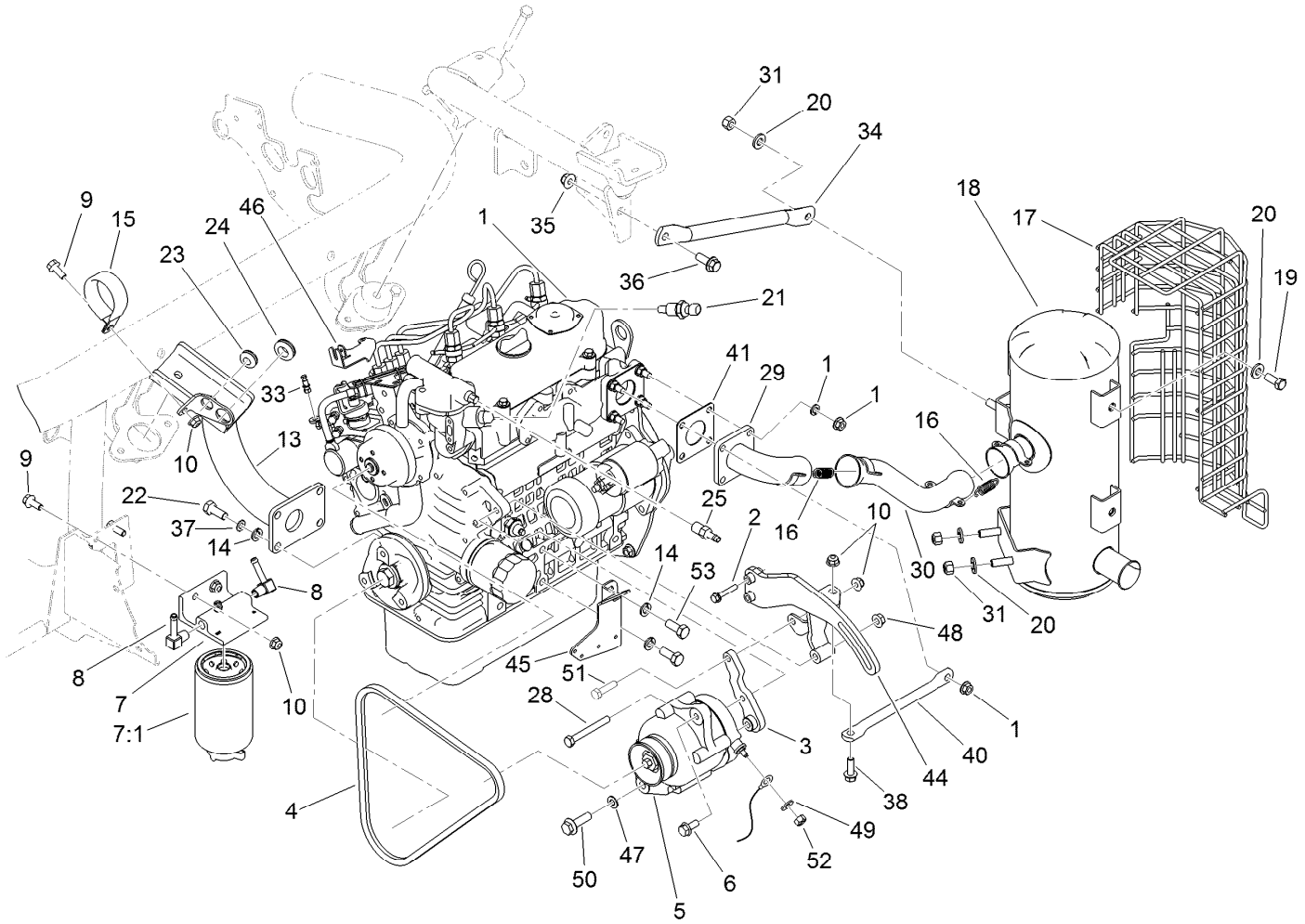

Engine and Exhaust Assembly (continued)

Ref.	Part Number	Qty.	Description
50	33105-035	1	Screw-HHF
51	322-6	1	Screw-HH
52	33013-00	1	Nut-Hex
53	63-7790	2	Screw-Cap

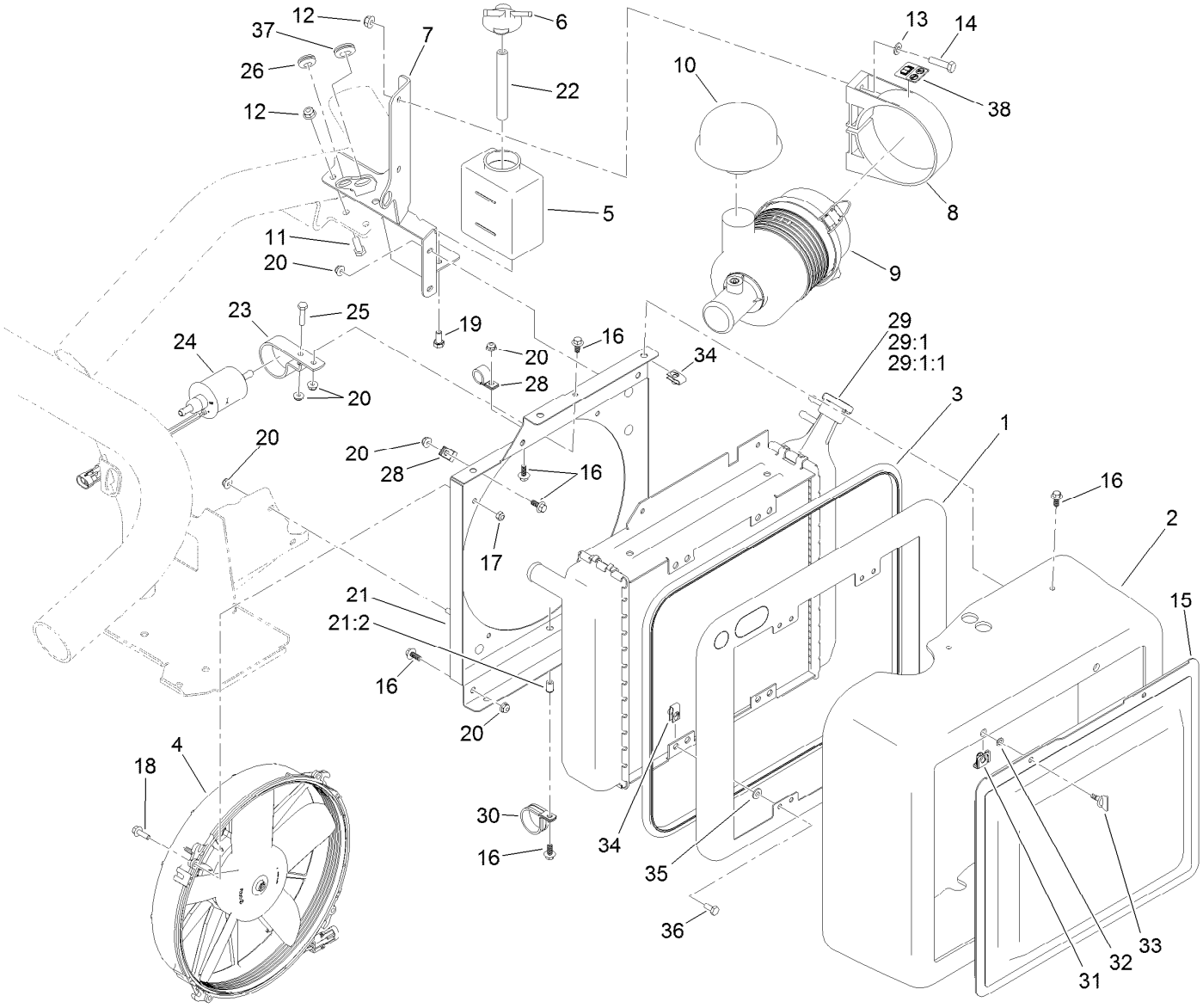

Radiator, Fuel Pump and Air Cleaner Assembly

Ref.	Part Number	Qty.	Description
1	117-9307-03	1	Panel-Seal, Radiator
2	117-9296	1	Shroud-Radiator
3	117-9308	1	Trim-Seal
4	115-5765	1	Fan
5	93-2049	1	Tank-Overflow
6	93-2048	1	Cap-Tank, Overflow
7	117-9260-03	1	Air Cleaner Bracket ASM
8	95-5806	1	Bracket-Mounting
9	95-5805	1	Air Cleaner ASM
10	46-7510	1	Hood-Inlet, Air
11	322-4	2	Screw-HH
12	104-8300	4	Nut-Flange, NI
13	3256-23	2	Washer-Flat
14	322-6	2	Screw-HH
15	117-9311-03	1	Screen
16	99-6810	12	Screw-HHF
17	110-8451	4	Nut-Hex, NI
18	33103-020	4	Screw-HHF
19	33114-016	2	Screw-HH
20	104-7201	12	Nut-Flange, NI

Ref.	Part Number	Qty.	Description
21	119-9038	1	Shroud ASM
21:2	32117-2	1	Insert-Threaded
22	108-3283	1	Hose-Fuel
23	110-8817	1	Bracket-Pump, Fuel
24	110-8806	1	Pump-Fuel
25	321-7	1	Screw-HH
26	1-633630	1	Grommet
28	2412-87	2	Clamp-Cable
29	117-9860	1	Radiator
29:1	115-7766	1	Cap-Radiator
29:1:1	106-6755	1	Decal-Cap, Radiator
30	119-9037	1	Clamp-R
31	119-1730	2	Receptacle-Clip, Mini
32	119-1729	2	Retainer-Stud
33	120-1957	2	Stud-Rapier
34	107069	8	Clip
35	3256-22	4	Washer-Flat
36	321-3	4	Screw-HH
37	237-124	1	Grommet
38	115-8155	1	Decal-Warning

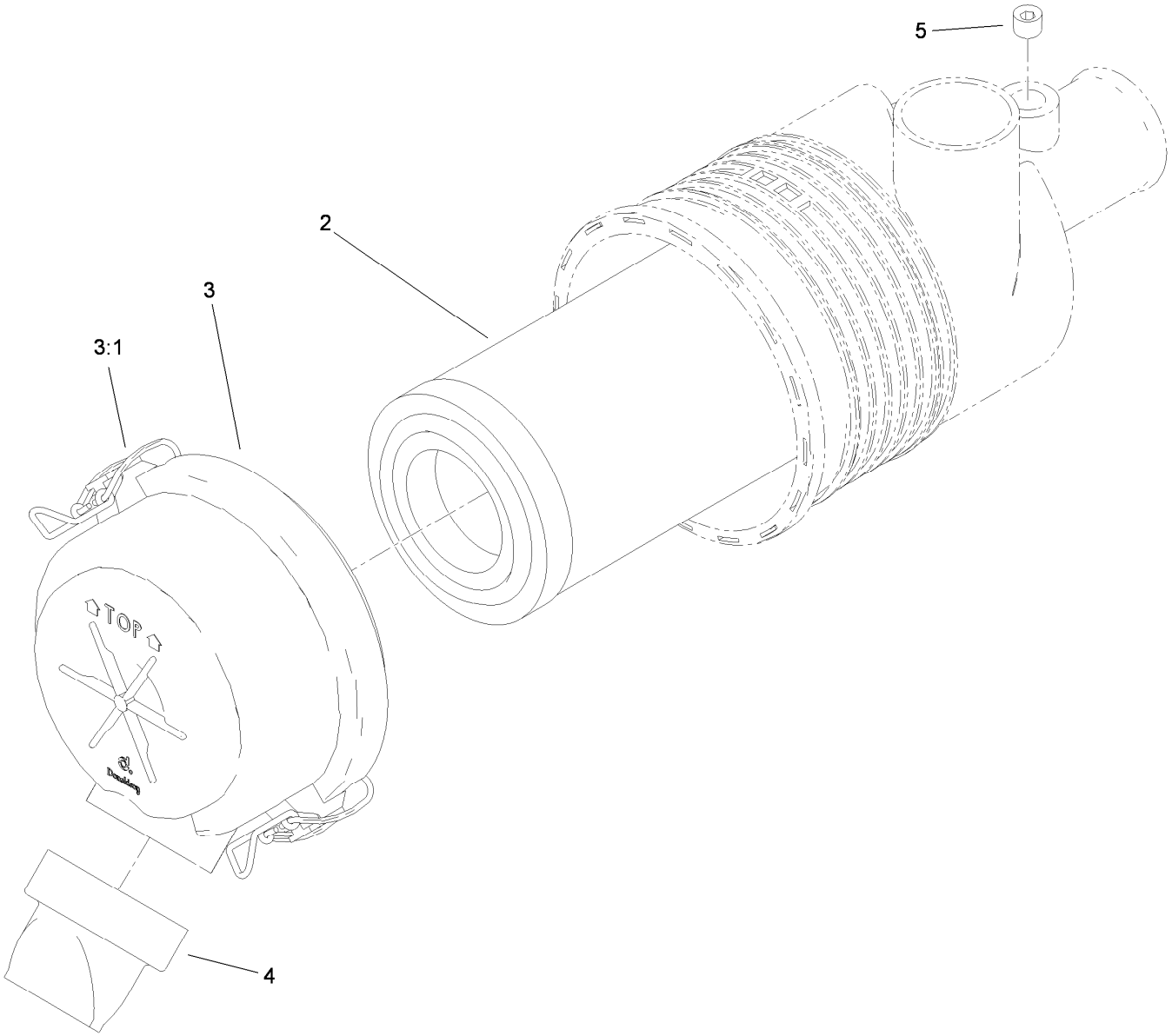

Air Cleaner Assembly No. 95-5805

Ref.	*Part Number*	*Qty.*	*Description*
2	108-3811	1	Filter-Air
3	94-3652	1	Cover ASM
3:1	1-643283	2	Latch-Cleaner, Air
4	87-9400	1	Valve-Vacuator
5	285-17	1	Plug-Pipe

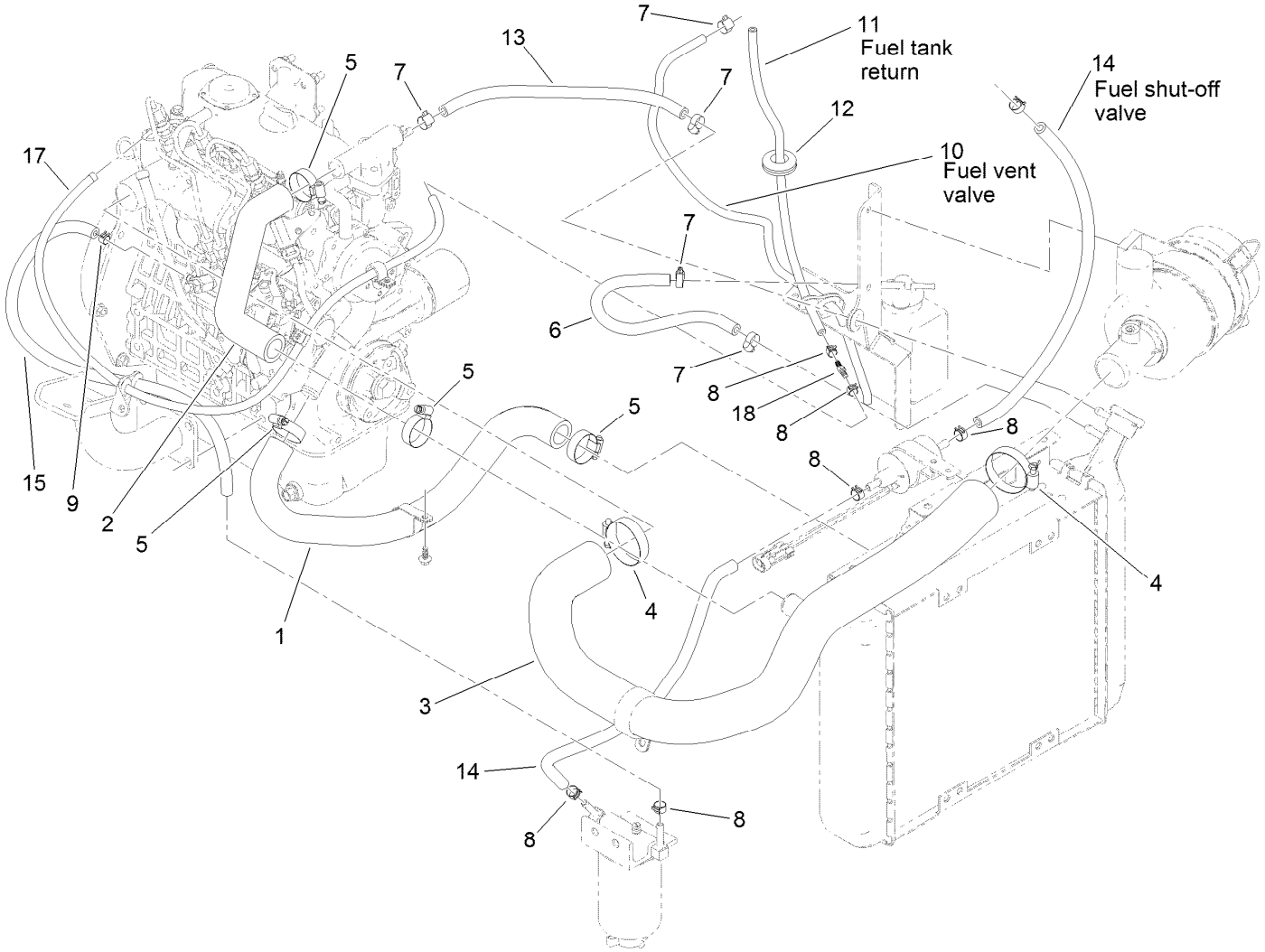

Radiator, Air and Fuel Line Assembly

Ref.	Part Number	Qty.	Description
1	117-9268	1	Hose-Radiator, Lower
2	117-9261	1	Hose-Radiator, Upper
3	117-4481	1	Hose-Air
4	2412-92	2	Clamp-Hose
5	1-633989	4	Clamp-Hose
6	110-4110	1	Hose-LP
7	2412-108	5	Clamp-Worm
8	92-2379	6	Clamp-Hose
9	2412-146	4	Clamp-Hose

Ref.	Part Number	Qty.	Description
10	119-6074	1	Hose-Fuel
11	119-8150	1	Hose-Fuel
12	240-4	1	Grommet-Rubber
13	119-8136	1	Hose-Fuel
14	110-4109	2	Hose-Fuel
15	110-6187	1	Hose-Fuel
17	119-3517	1	Hose-Fuel
18	120-1996	1	Splicer-Hose, Barbed

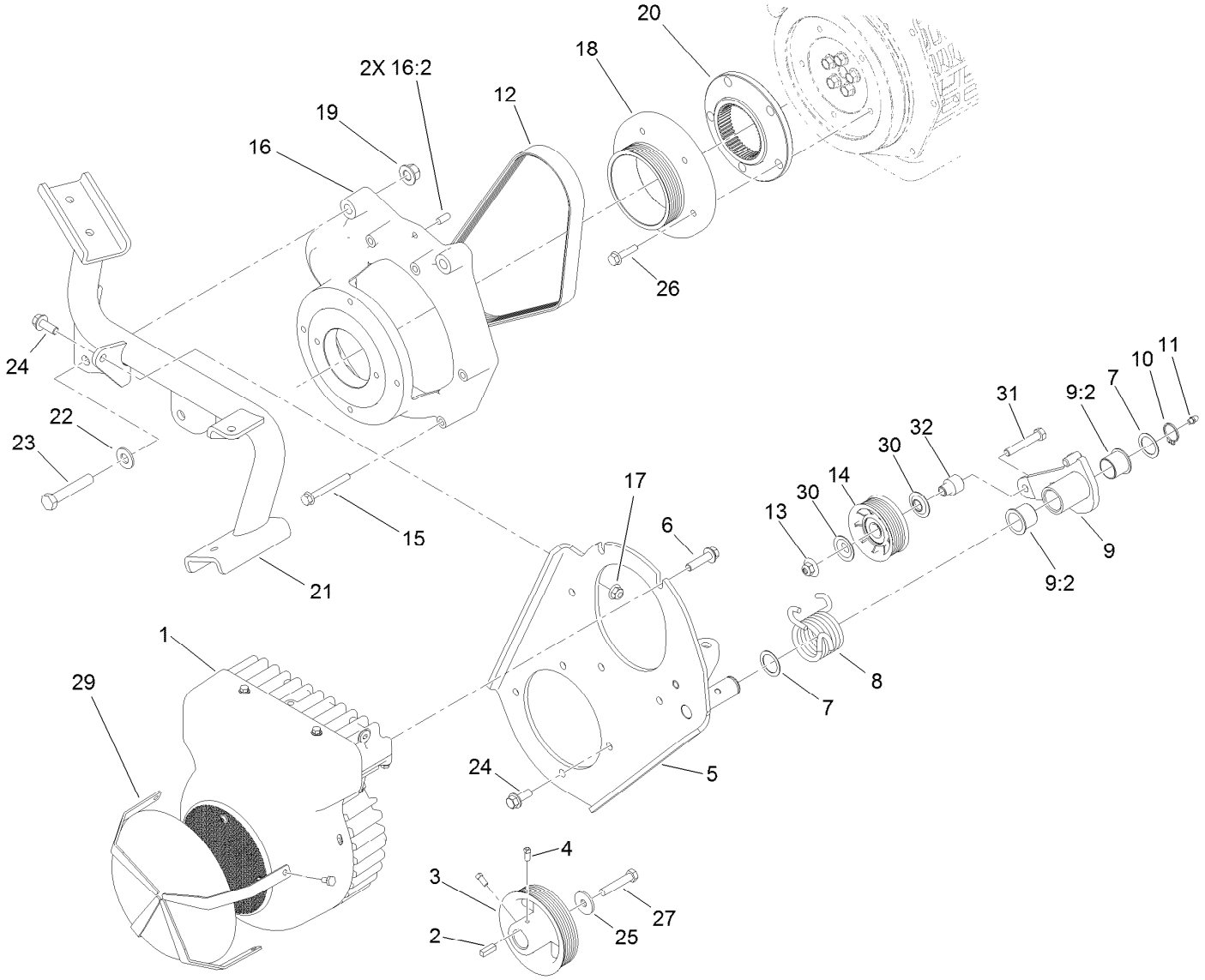

Generator and Engine Frame Assembly

Ref.	Part Number	Qty.	Description
1	117-8185	1	Generator/Controller ASM
2	10-7070	1	Key-Square
3	117-9295	1	Pulley-Generator
4	3241-7	2	Screw-SQH
5	117-9293-03	1	Plate-Generator
6	114-4681	5	Screw-HHF
7	74-1810	2	Washer
8	117-9342	1	Spring-Torsion
9	117-9294	1	Idler Bracket ASM
9:2	99-3631	2	Bushing-Flange
10	32151-36	1	Ring-Retaining
11	302-5	1	Fitting-Grease
12	117-4464	1	Belt-V
13	109-6658	1	Nut-Flange, NI
14	120-5766	1	Pulley ASM
15	33104-070	5	Screw-HHF
16	119-4454	1	Bell Housing ASM

Ref.	Part Number	Qty.	Description
16:2	87-1910	2	Pin-Dowel
17	104-8301	5	Nut-Flange, NI
18	117-4458	1	Pulley-Engine, Diesel
19	99-5107	2	Nut-Lock
20	115-8727	1	Flange-Coupling
21	119-2131-03	1	Mount-Rear, Engine
22	87-7270	2	Washer-Thrust
23	325-11	2	Screw-HH
24	3234-42	6	Screw-HHF
25	63-8410	1	Washer
26	33104-035	5	Screw-HHF
27	3211-9	1	Screw-HH
29	117-4504-03	1	Guard
30	120-5757	2	Washer-Flange
31	323-11	1	Screw-HH
32	120-2009	1	Spacer-Pulley, Idler

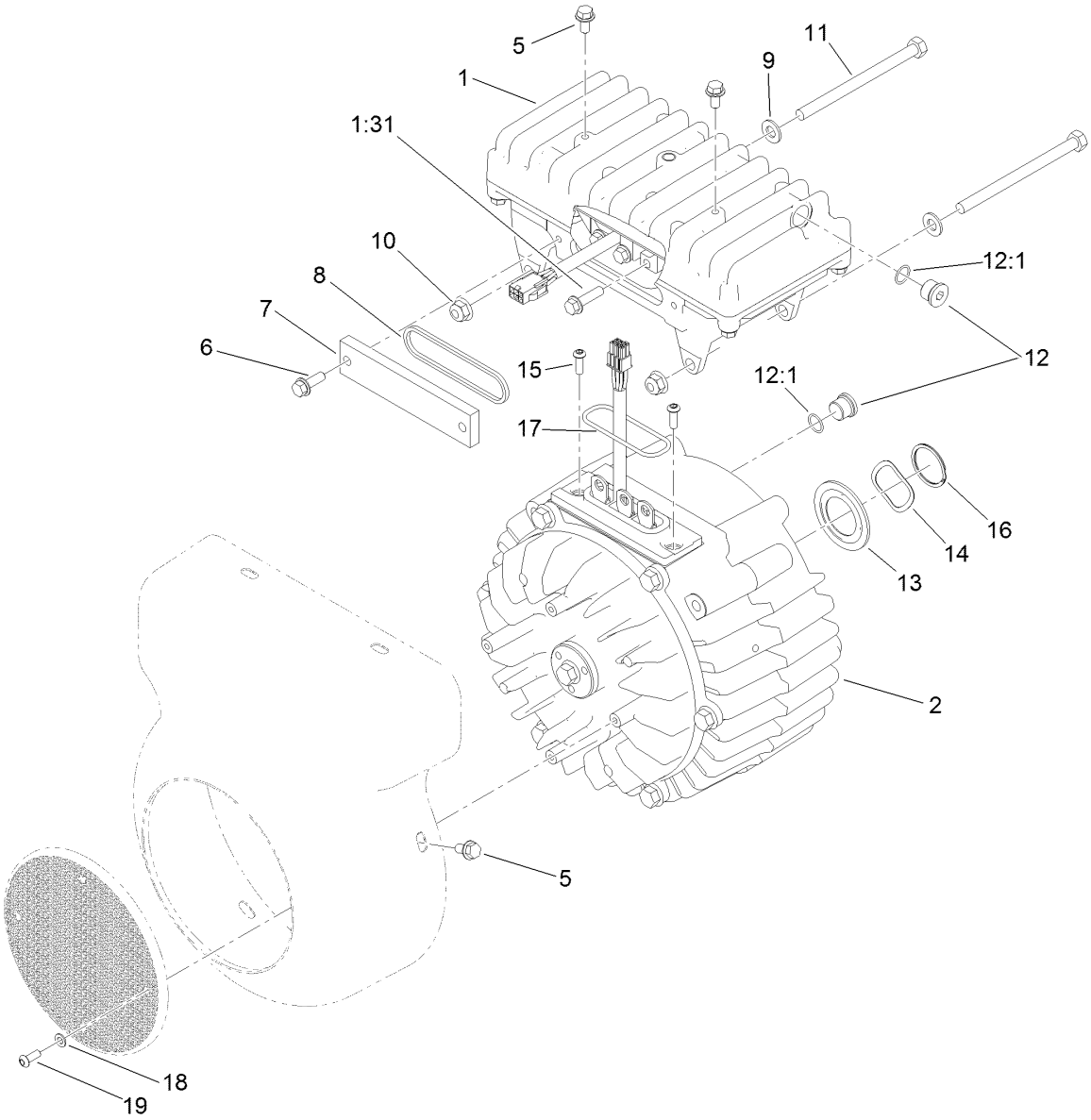

Generator/Controller Assembly No. 117-8185

Ref.	Part Number	Qty.	Description
1	117-8181	1	Controller ASM
1:31	120-4654	3	Screw-HHF
2	117-8182	1	Generator ASM
5	119-1065	6	Screw-HWH
6	119-1138	2	Screw-HWH
7	120-4511	1	Cover-Access
8	120-4513	1	Gasket-Cover, Access
9	3256-23	2	Washer-Flat
10	104-8300	2	Nut-Flange, NI
11	322-38	2	Screw-HH

Ref.	Part Number	Qty.	Description
12	353-989	2	Plug-Hex, Hollow
12:1	237-42	1	O-Ring
13	115-3299	1	Seal-Flocked
14	117-8147	1	Washer-Wave
15	119-7568	2	Screw-HSBH
16	112-9607	1	Ring-Retaining, Spiral (EXT)
17	117-8176	1	O-Ring
18	120-4563	4	Washer-Flat
19	120-4564	4	Screw-Bhcs

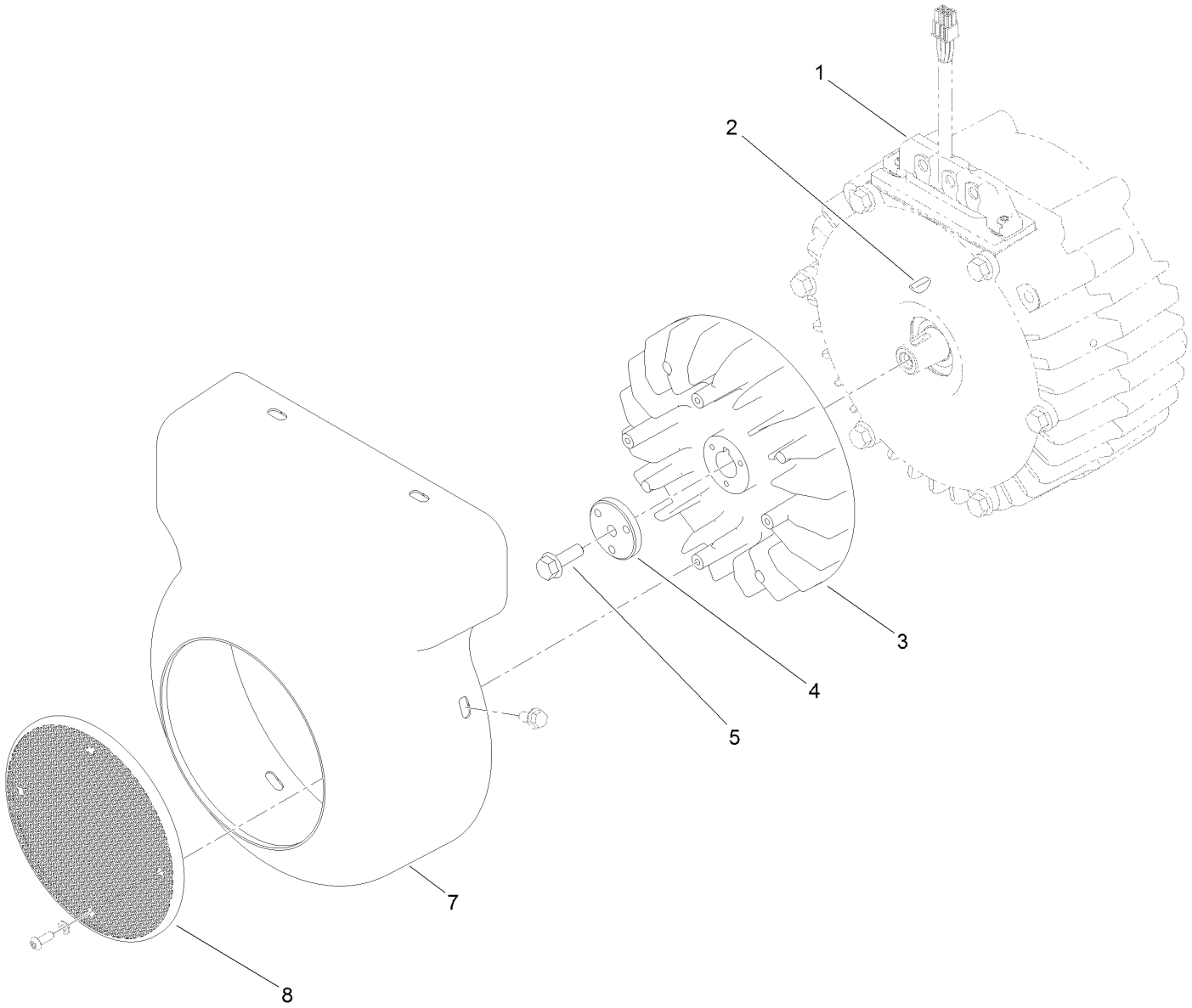

Generator Assembly No. 117-8182

Ref.	*Part Number*	*Qty.*	*Description*
1	119-1069	1	Generator Service ASM
2	112-5193	1	Key-Woodruff
3	117-8184	1	Fan-Generator
4	112-9604	1	Collar
5	33104-025	1	Screw-HHF
7	117-4579	1	Cover-Generator
8	112-9601	1	Screen-Flywheel

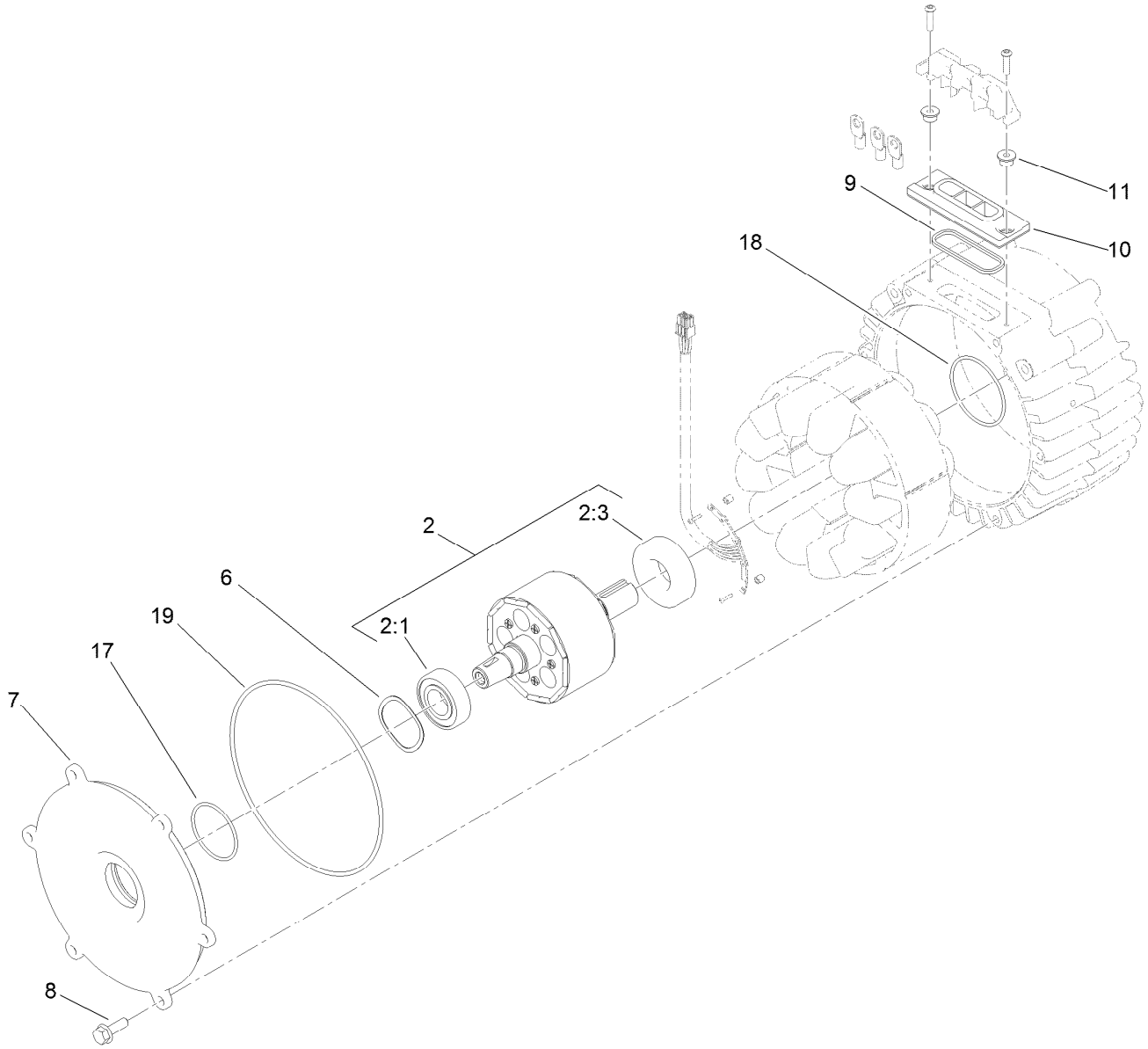

Generator Service Assembly No. 119-1069

Ref.	*Part Number*	*Qty.*	*Description*
2	119-7565	1	Rotor ASM
2:1	120-4621	1	Bearing
2:3	120-4622	1	Bearing
6	117-8148	1	Washer-Wave
7	117-4514	1	Cover-Generator
8	33104-025	6	Screw-HHF
9	120-4518	1	Gasket-Isolator
10	112-5155	1	Isolator-Thermal
11	117-4501	2	Spacer-Shoulder
17	107-3244	1	O-Ring
18	117-8177	1	O-Ring
19	112-5199	1	O-Ring

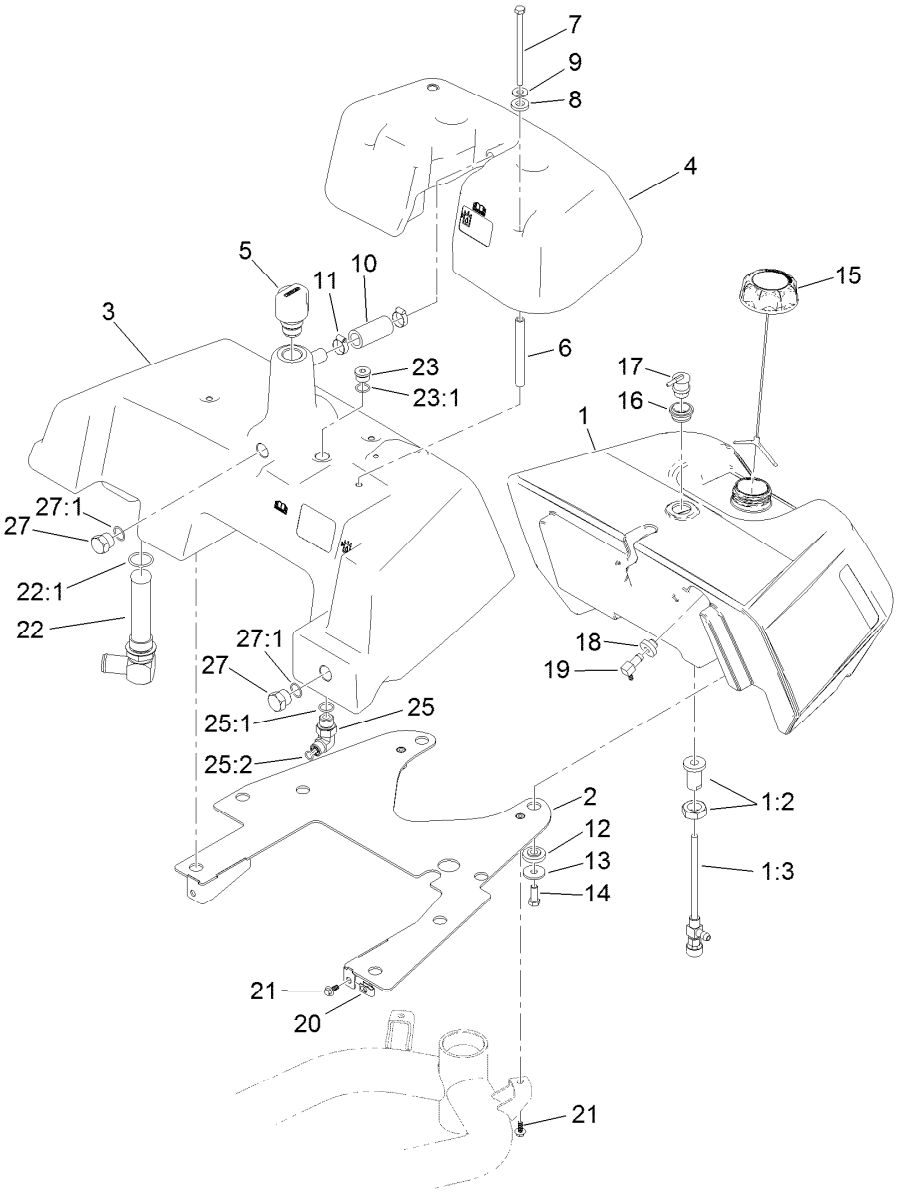

Fuel and Hydraulic Tank Assembly

Ref.	Part Number	Qty.	Description
1	115-9816	1	Fuel Tank ASM
1:2	114-4677	1	Bulkhead ASM
1:3	114-4679	1	Fitting-Shut Off, Fuel
2	115-9849-03	1	Plate-Mount, Tank
3	115-9823	1	Tank-Hydraulic
4	115-9837	1	Cover-Tank
5	115-9793	1	Breather
6	115-9825	4	Spacer-Tube, Long
7	322-29	4	Screw-HH
8	83-1470	4	Washer-Neoprene
9	3256-71	4	Washer-Flat
10	110-3998	1	Hose-Overflow
11	2412-141	2	Clamp-Drive, Worm
12	240-11	8	Bushing-Flange
13	63-8410	8	Washer
14	323-6	8	Screw-HH

Ref.	Part Number	Qty.	Description
15	115-8249	1	Cap-Fuel, Ratcheting
16	114-0284	1	Grommet
17	119-3547	1	Valve-Vent, Fuel
18	46-6560	1	Bushing
19	104-5228	1	Fitting-Elbow, 90 DEG
20	107069	2	Clip
21	99-6810	4	Screw-HHF
22	105-0204	1	Strainer Fitting ASM
22:1	237-146	1	O-Ring
23	353-988	1	Plug-Hex
23:1	237-79	1	O-Ring
25	340-18	1	Fitting-HYD, 90 DEG
25:1	237-79	1	O-Ring
25:2	237-22	1	O-Ring
27	353-551	2	Plug-HH
27:1	237-80	1	O-Ring

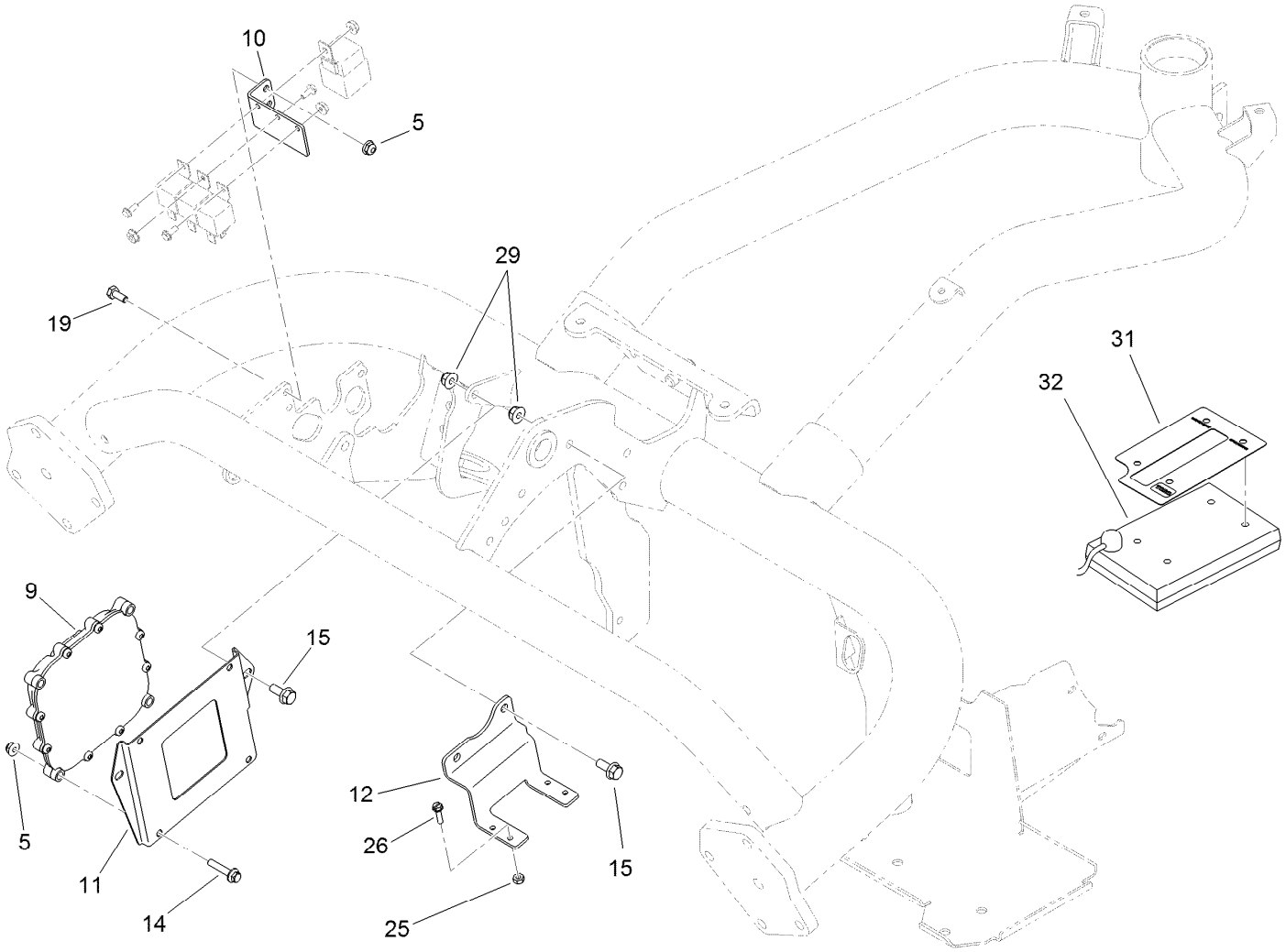

Controller Assembly

Ref.	Part Number	Qty.	Description
5	104-7201	6	Nut-Flange, NI
9	115-1900	1	Controller
10	119-2097-01	1	Bracket-Relay
11	119-2099-01	1	Plate-Mounting, Controller
12	119-2119-01	1	Bracket-Block, Fuse
14	3234-21	4	Screw-HHF
15	3234-47	4	Screw-HHF
19	321-3	2	Screw-HH
25	3296-2	4	Nut-Lock, NI
26	32105-13	4	Screw-HWH
29	104-8300	4	Nut-Flange, NI
31	115-8227	1	Decal-Controller
32	85-4750	1	Box-Display, Diagnostic

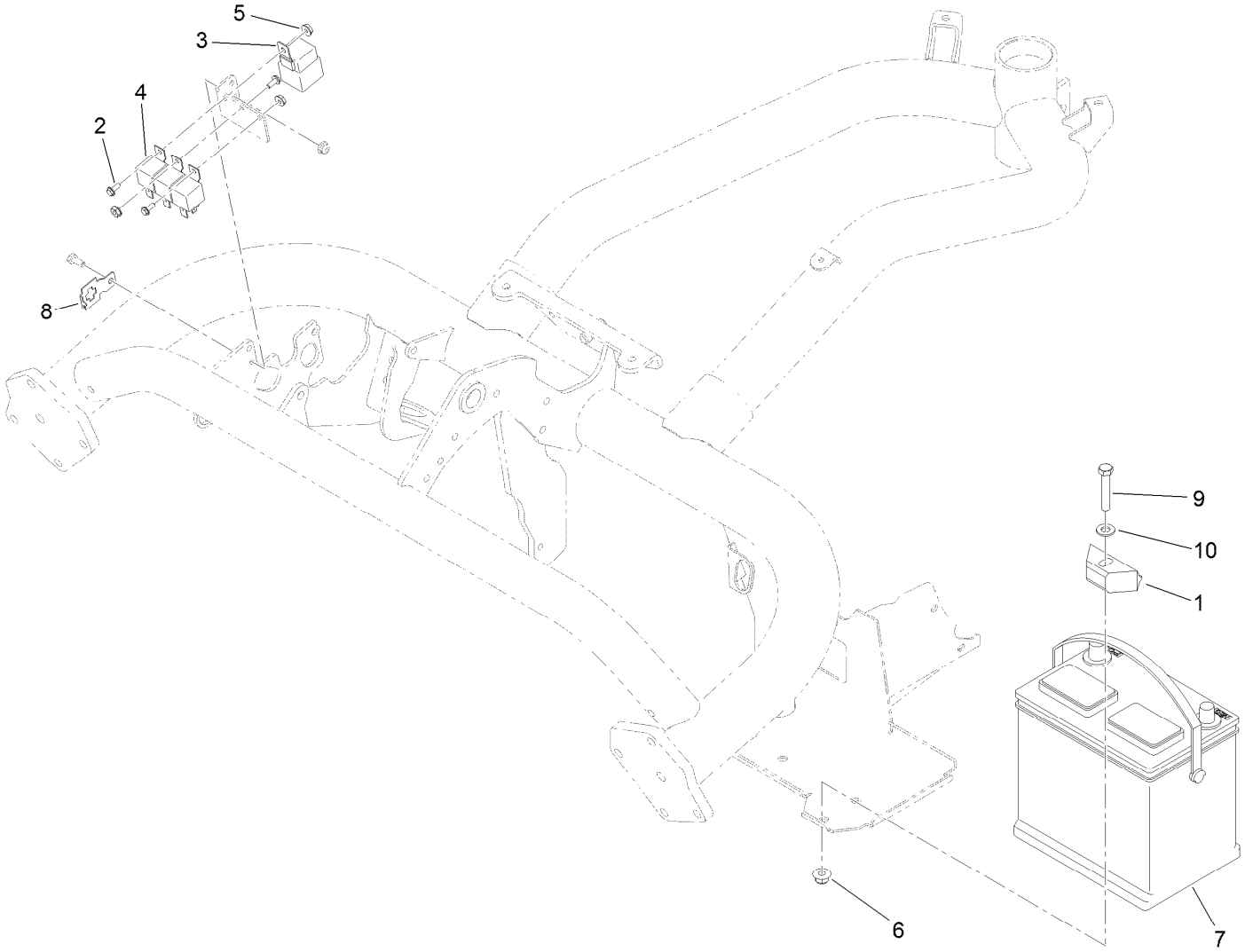

Battery Assembly

Ref.	Part Number	Qty.	Description
1	66-2490	1	Retainer-Battery
2	112-6349	3	Screw-HWH
3	99-7430	1	Relay
4	99-7435	3	Relay-Power
5	32149-8	3	Nut-Keps
6	104-8301	1	Nut-Flange, NI
7	104-9979	1	Battery-Dry
8	114-5502	1	Clip-Fuse
9	323-10	1	Screw-HH
10	3256-24	1	Washer-Flat

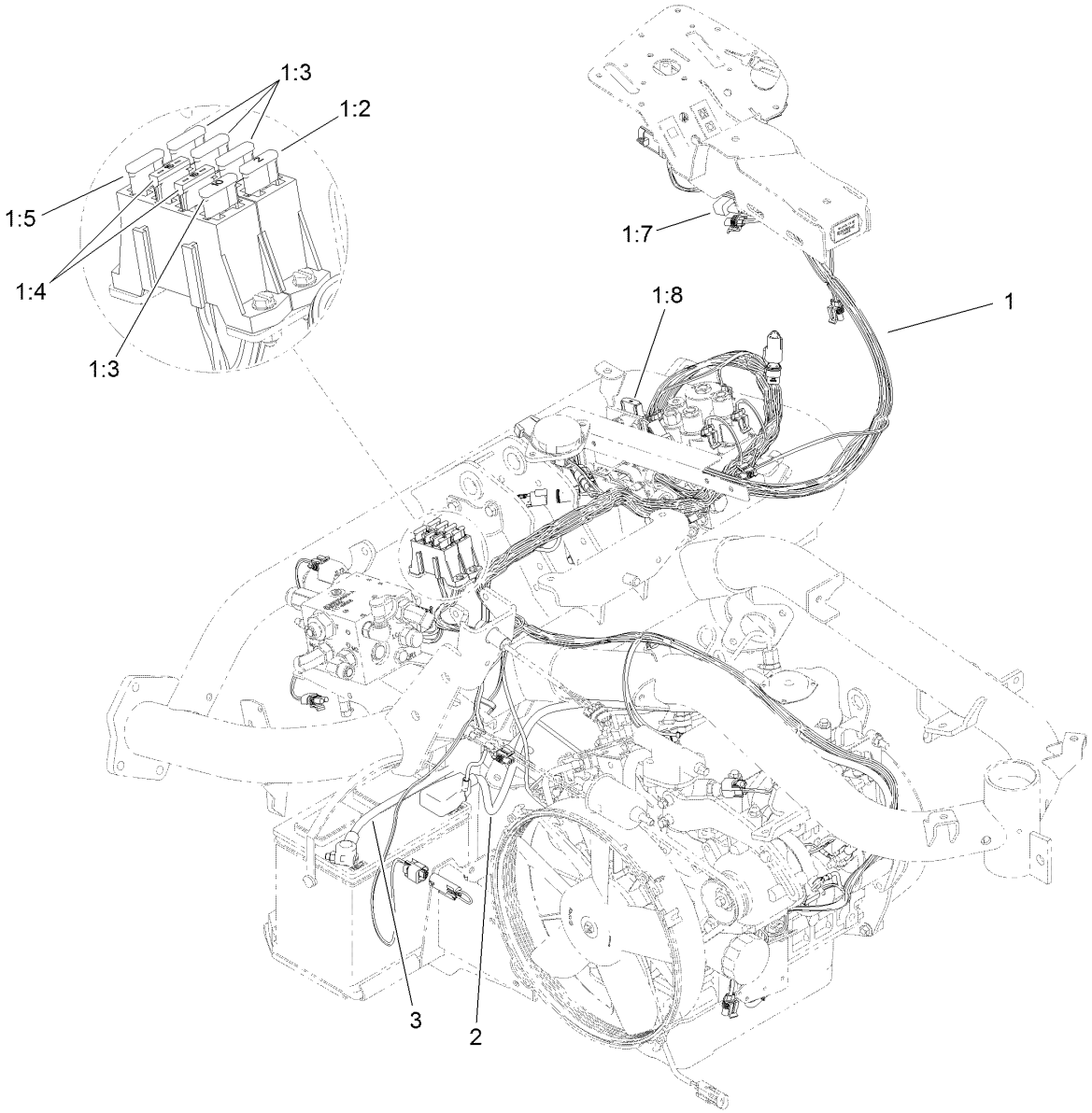

Wire Harness Assembly

Ref.	Part Number	Qty.	Description
1	117-5646	1	Harness-Wire
1:2	94-6710	1	Fuse-2 Amp
1:3	218-578	4	Fuse-Blade, 10 Amp
1:4	109355	2	Fuse-Blade, 15 Amp
1:5	114241	1	Fuse-Blade, 7.5 Amp
1:6	100-4918	1	Diode-Over Molded ●
1:7	104-4022	1	Resistor-75 Ohm
1:8	94-8002	1	Fuse-Blade, 50 Amp
2	114-9747	1	Cable-Battery, Positive
3	115-8135	1	Cable-Battery, Negative

● Not illustrated

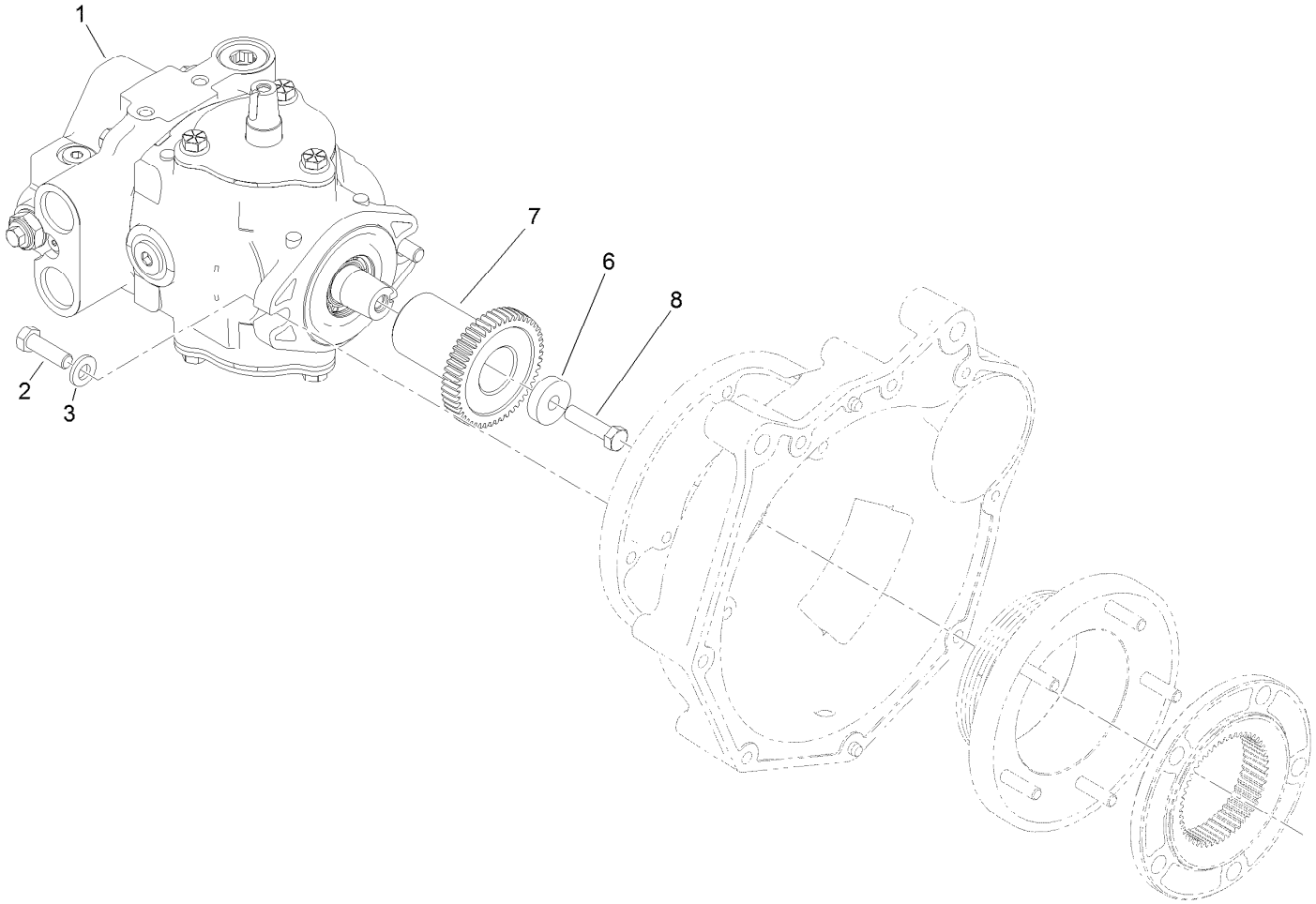

Pump Coupling Assembly

Ref.	*Part Number*	*Qty.*	*Description*
1	114-9957	1	HYD Pump ASM
2	323-7	2	Screw-HH
3	100-4852	2	Washer-Hardened
6	117-3657	1	Spacer
7	115-8726	1	Hub-Taper
8	3211-6	1	Screw-HH

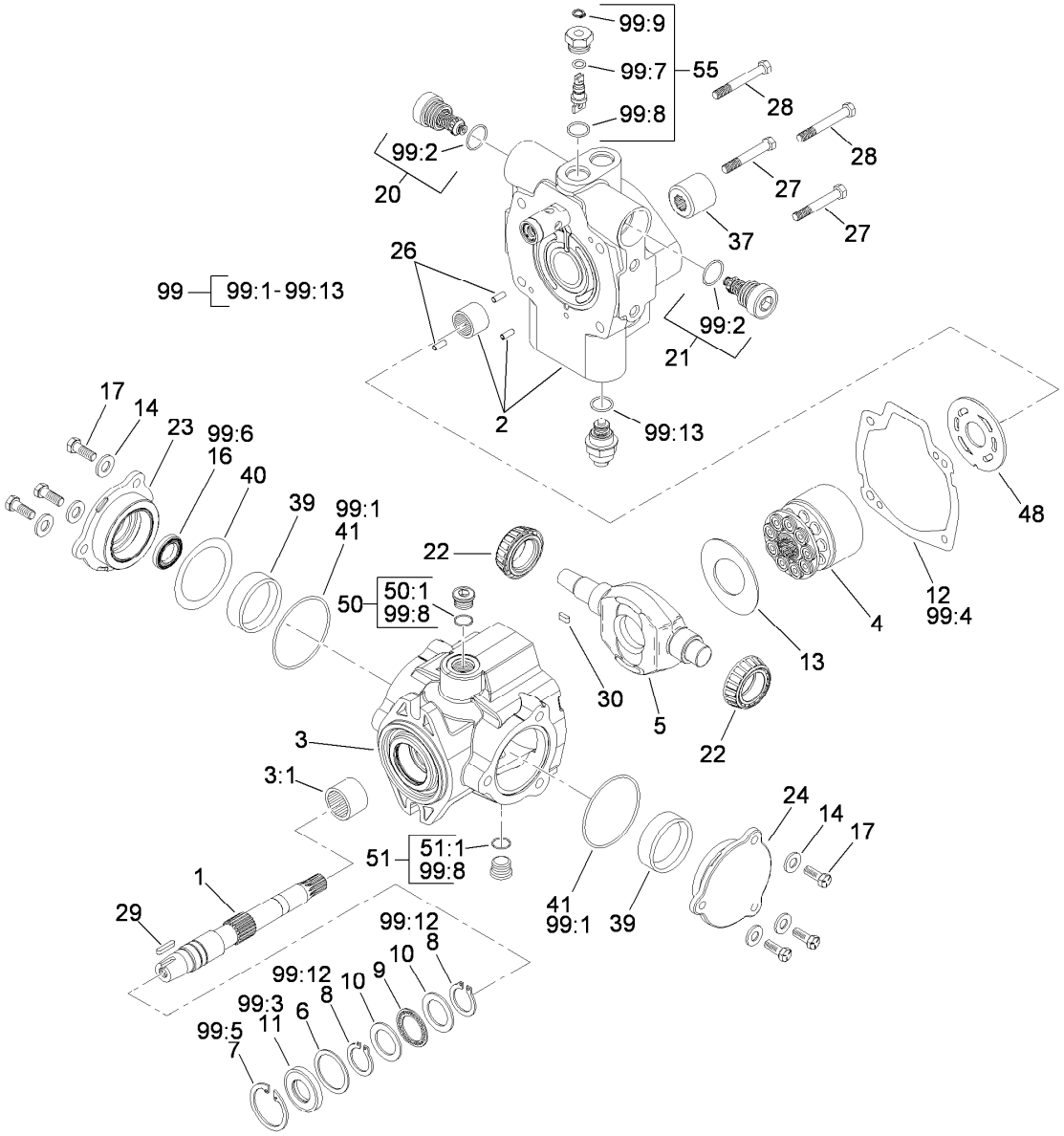

Hydraulic Pump Assembly No. 114-9957

Ref.	Part Number	Qty.	Description
1	119-7148	1	Shaft-Drive, Tapered
2	119-7149	1	Endcover ASM
3	100-3176	1	Housing ASM
3:1	94-6363	1	Bearing
4	76-6070	1	Rotating Kit
5	104-4888	1	Swashplate
6	33-3720	1	Washer
7	32151-13	1	Ring-Retaining
8	32151-29	2	Ring-Retaining
9	252-66	1	Bearing-Thrust
10	252-71	2	Washer-Thrust
11	104-4861	1	Seal-Shaft
12	33-4930	1	Gasket-Housing
13	98-4635	1	Insert-Plate, Cam
14	105-9762	6	Washer
16	76-6190	1	Seal-Shaft
17	98-4640	6	Screw-Cap
20	120-1989	1	Relief Valve ASM

Ref.	Part Number	Qty.	Description
21	120-1989	1	Relief Valve ASM
22	98-4639	2	Bearing-Cone
23	98-4645	1	Plate-Cover
24	98-4644	1	Plate-Cover
26	76-6150	2	Pin-Dowel
27	76-6160	2	Capscrew
28	76-6170	2	Capscrew
29	120-5751	1	Key
30	94-3646	1	Key
37	74-9040	1	Coupler
39	104-4046	2	Bearing-Cup
40	100-3182	1	Shim Kit
41	100-3179	2	O-Ring
48	100-3180	1	Plate-Valve
50	74-9280	1	Plug ASM
50:1		1	Ring-Retaining ■
51	74-9280	1	Plug ASM
51:1		1	Ring-Retaining ■

● Not illustrated

■ Not serviced separately

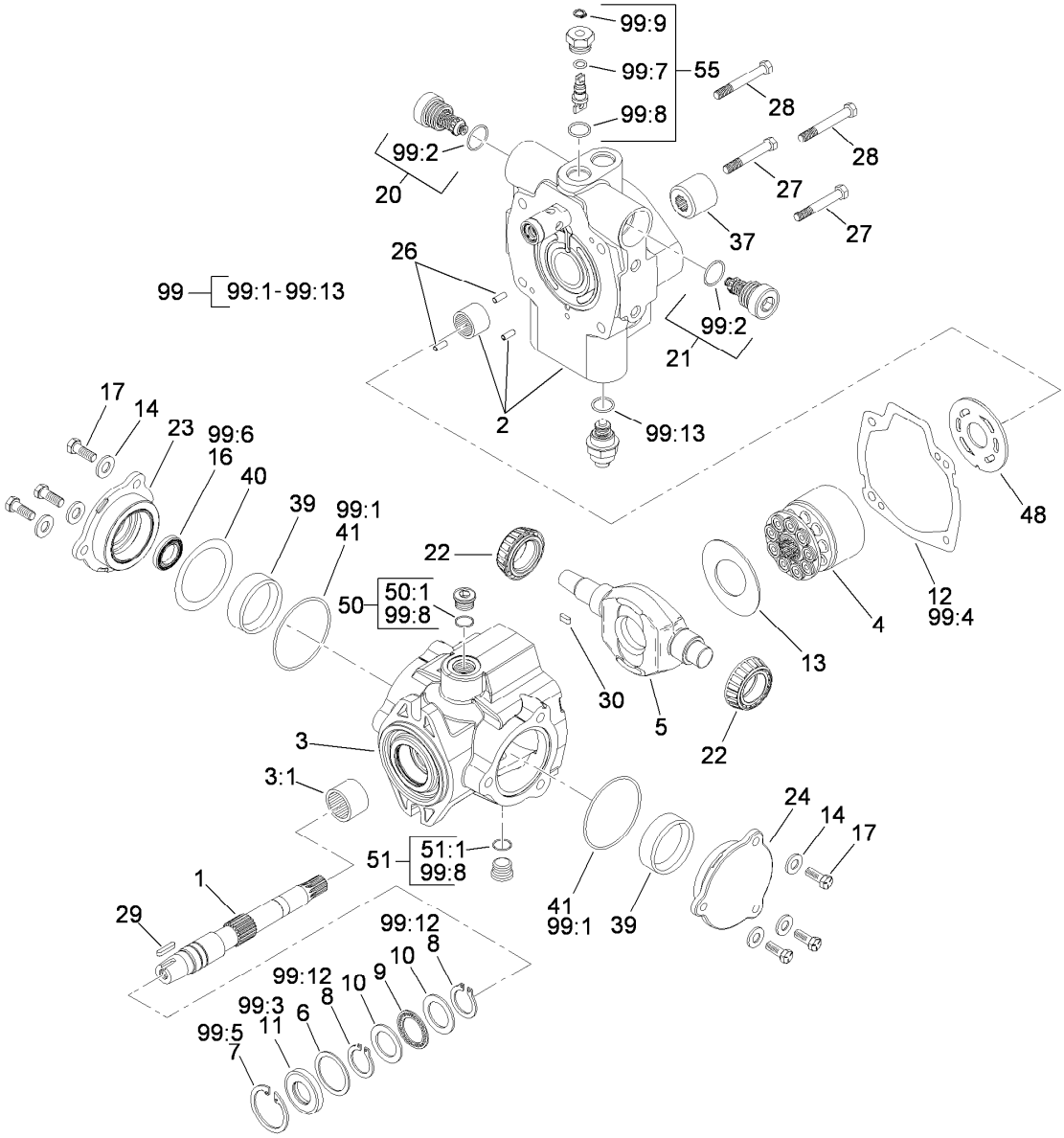

Hydraulic Pump Assembly No. 114-9957 (continued)

Ref.	Part Number	Qty.	Description
55	105-3811	1	Valve-Bypass
99	120-5754	1	Seal Kit
99:1		2	Ring-Retaining ■
99:2		2	Ring-Retaining ■
99:3		1	Seal-Shaft ■
99:4		1	Gasket ■
99:5		1	Ring-Retaining ■
99:6		1	Seal-Shaft ■
99:7		1	Ring-Retaining ■

Ref.	Part Number	Qty.	Description
99:8		5	Ring-Retaining ■
99:9		1	Ring-Retaining ■
99:10		1	O-Ring (Not Used For This Configuration) ■ ●
99:11		1	O Ring-Molded (Not Used For This Configuration) ■ ●
99:12		2	Ring-Retaining ■
99:13		1	Ring-Retaining ■

● Not illustrated

■ Not serviced separately

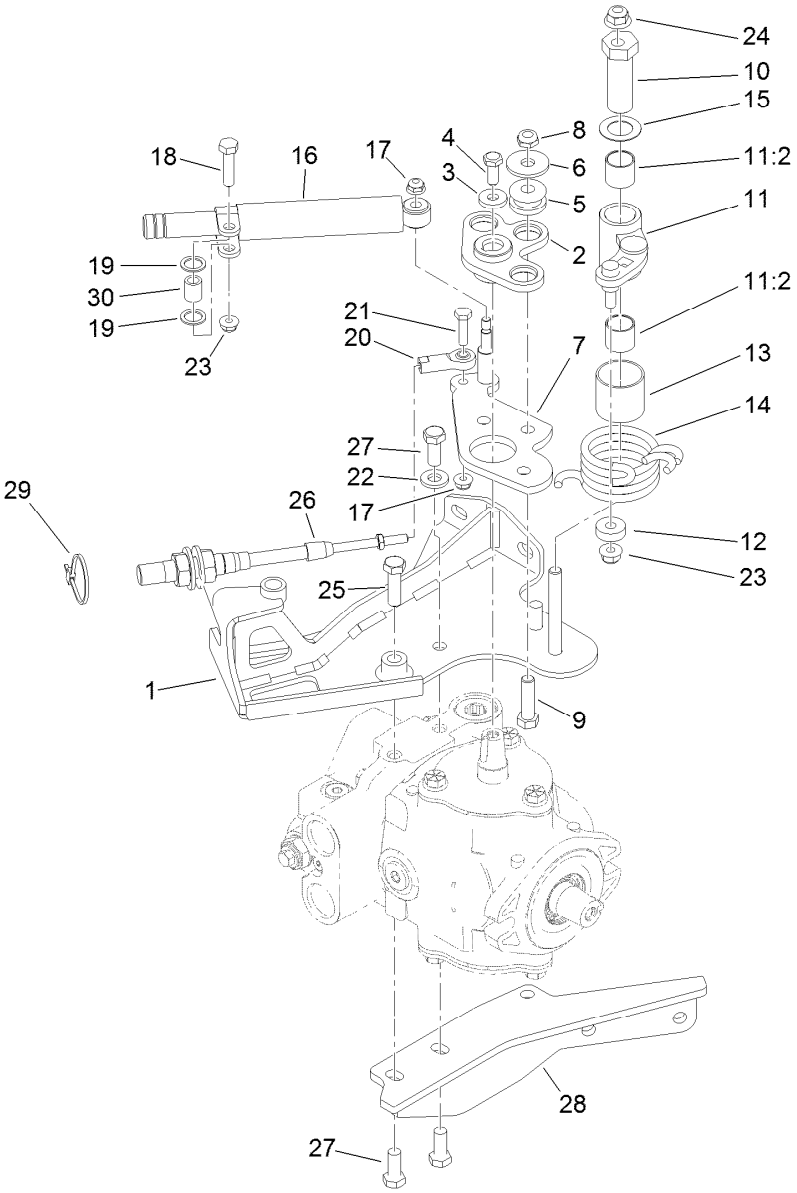

Neutral Centering Assembly

Ref.	Part Number	Qty.	Description
1	120-2015	1	Support-Cable
2	117-4466	1	Plate ASM
3	88-7200	1	Washer-Flat
4	3235-6	1	Screw-HH
5	63-9750	3	Mount
6	93-8806	3	Washer-Hardened
7	117-9061	1	Lever-Pump
8	3296-59	3	Nut-Lock, NI
9	323-29	3	Screw-HH
10	117-9046	1	Stud-Eccentric
11	117-9053	1	Neutral Arm ASM
11:2	94-9609	2	Bushing-Straight
12	251-259	1	Bearing-Ball
13	115-8158	1	Spacer-Spring
14	117-9047	1	Spring-Torsion
15	119-8199	1	Washer-Nylon

Ref.	Part Number	Qty.	Description
16	76-8870	1	Damper-Lever
17	104-7201	2	Nut-Flange, NI
18	322-6	1	Screw-HH
19	94-8196	2	Washer-Nylon
20	2411-41	1	Rod End-Ball Joint
21	321-6	1	Screw-HH
22	100-4852	1	Washer-Hardened
23	104-8300	2	Nut-Flange, NI
24	104-8301	1	Nut-Flange, NI
25	323-7	1	Screw-HH
26	119-1734	1	Cable-Control, Traction
27	323-5	3	Screw-HH
28	117-9302	1	Bracket-Muffler
29	3290-379	1	Tie-Cable
30	94-8197	1	Tube-Pivot

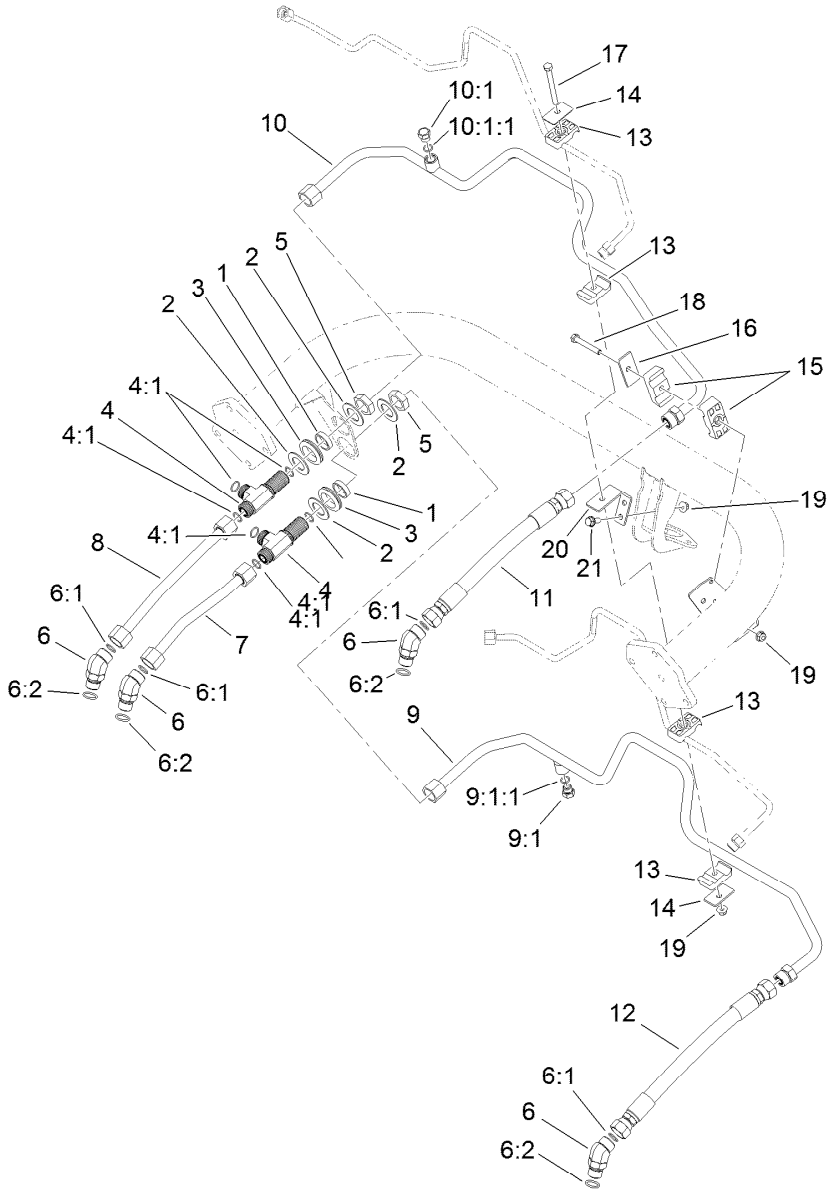

Traction Drive Hydraulic Line Assembly

Ref.	Part Number	Qty.	Description
1	69-9000	2	Spacer
2	69-9010	4	Washer
3	240-3	2	Grommet-Rubber
4	94-5350	2	Tee-Bulkhead
4:1	237-65	3	O-Ring
5	340-74	2	Nut-Lock, Bulkhead
6	340-14	4	Fitting-HYD, 45 DEG
6:1	237-65	1	O-Ring
6:2	237-80	1	O-Ring
7	119-2057	1	HYD Tube ASM
8	119-2058	1	HYD Tube ASM
9	119-2063	1	HYD Tube ASM
9:1	353-508	1	Plug-HH
9:1:1	237-42	1	O-Ring

Ref.	Part Number	Qty.	Description
10	119-2064	1	HYD Tube ASM
10:1	353-508	1	Plug-HH
10:1:1	237-42	1	O-Ring
11	115-9484	1	HYD Hose ASM
12	115-9485	1	HYD Hose ASM
13	56-7970	4	Clamp-Tube
14	69-9760	2	Coverplate
15	119-8173	2	Clamp-Tube
16	69-9761	1	Plate-Cover
17	322-20	1	Screw-HH
18	322-12	1	Screw-HH
19	104-8300	4	Nut-Flange, NI
20	119-2092	1	Bracket-Tube
21	3234-47	2	Screw-HHF

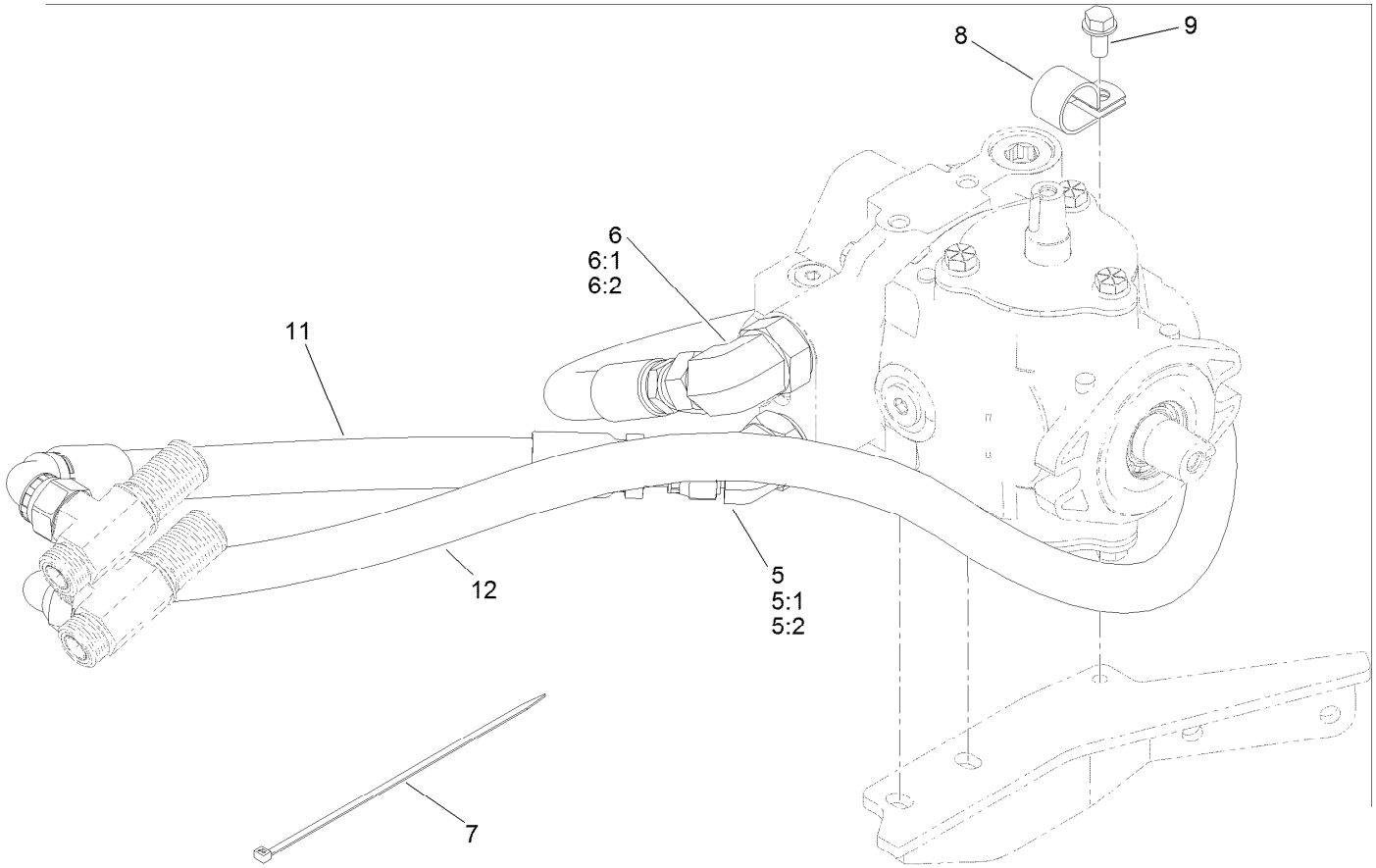

Traction Drive Hose Routing Assembly

Ref.	Part Number	Qty.	Description
5	340-156	1	Fitting-HYD
5:1	237-65	1	O-Ring
5:2	237-81	1	O-Ring
6	340-139	1	Fitting-HYD, 90 DEG
6:1	237-81	1	O-Ring
6:2	237-65	1	O-Ring
7	3290-378	1	Tie-Cable
8	2412-39	1	R-Clamp
9	32144-14	1	Screw-HWHTF
11	117-3696	1	HYD Hose ASM
12	120-1966	1	HYD Hose ASM

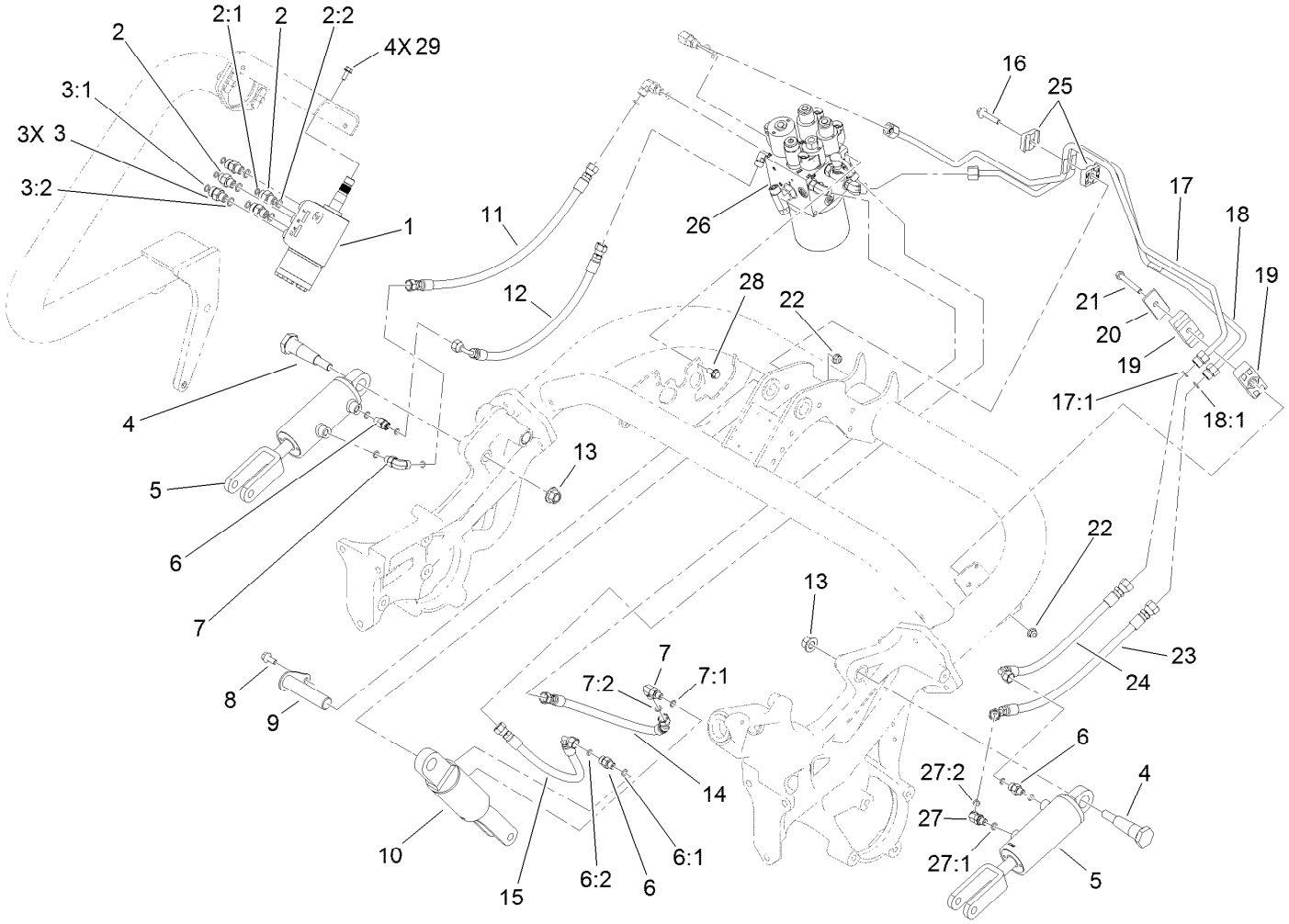

Lift Circuit Assembly

Ref.	Part Number	Qty.	Description
1	114-4672	1	Steering Valve ASM
2	340-1	2	Fitting-HYD, Straight
2:1	237-21	1	O-Ring
2:2	237-42	1	O-Ring
3	340-2	3	Fitting-HYD, Straight
3:1	237-22	1	O-Ring
3:2	237-42	1	O-Ring
4	112-5709	2	Pin-Tapered
5	119-8129	2	No. 2 And 3 HYD Cylinder ASM
6	340-92	3	Fitting-HYD, Straight
6:1	237-78	1	O-Ring
6:2	237-21	1	O-Ring
7	340-132	2	Fitting-HYD, 90 DEG
7:1	237-78	1	O-Ring
7:2	237-21	1	O-Ring
8	3234-47	1	Screw-HHF
9	119-8104	1	Pin ASM
10	119-8128	1	No. 1 HYD Cylinder ASM
11	119-2052	1	HYD Hose ASM
12	119-2053	1	HYD Hose ASM

Ref.	Part Number	Qty.	Description
13	99-5107	2	Nut-Lock
14	119-2051	1	HYD Hose ASM
15	119-2050	1	HYD Hose ASM
16	115-1794	1	Screw-HHF
17	119-8126	1	HYD Tube ASM
17:1	237-22	1	O-Ring
18	119-8127	1	HYD Tube ASM
18:1	237-22	1	O-Ring
19	120-3200	2	Clamp-Tube
20	69-9761	1	Plate-Cover
21	322-12	1	Screw-HH
22	104-8300	3	Nut-Flange, NI
23	119-2066	1	HYD Hose ASM
24	119-2065	1	Hose-HYD
25	56-7973	2	Clamp-Tube
26	119-7118	1	Hydraulic Lift Manifold ASM
27	340-103	1	Fitting-HYD, 45 DEG
27:1	237-78	1	O-Ring
27:2	237-21	1	O-Ring
28	3234-7	2	Screw-HHF
29	33103-016	4	Screw-HHF

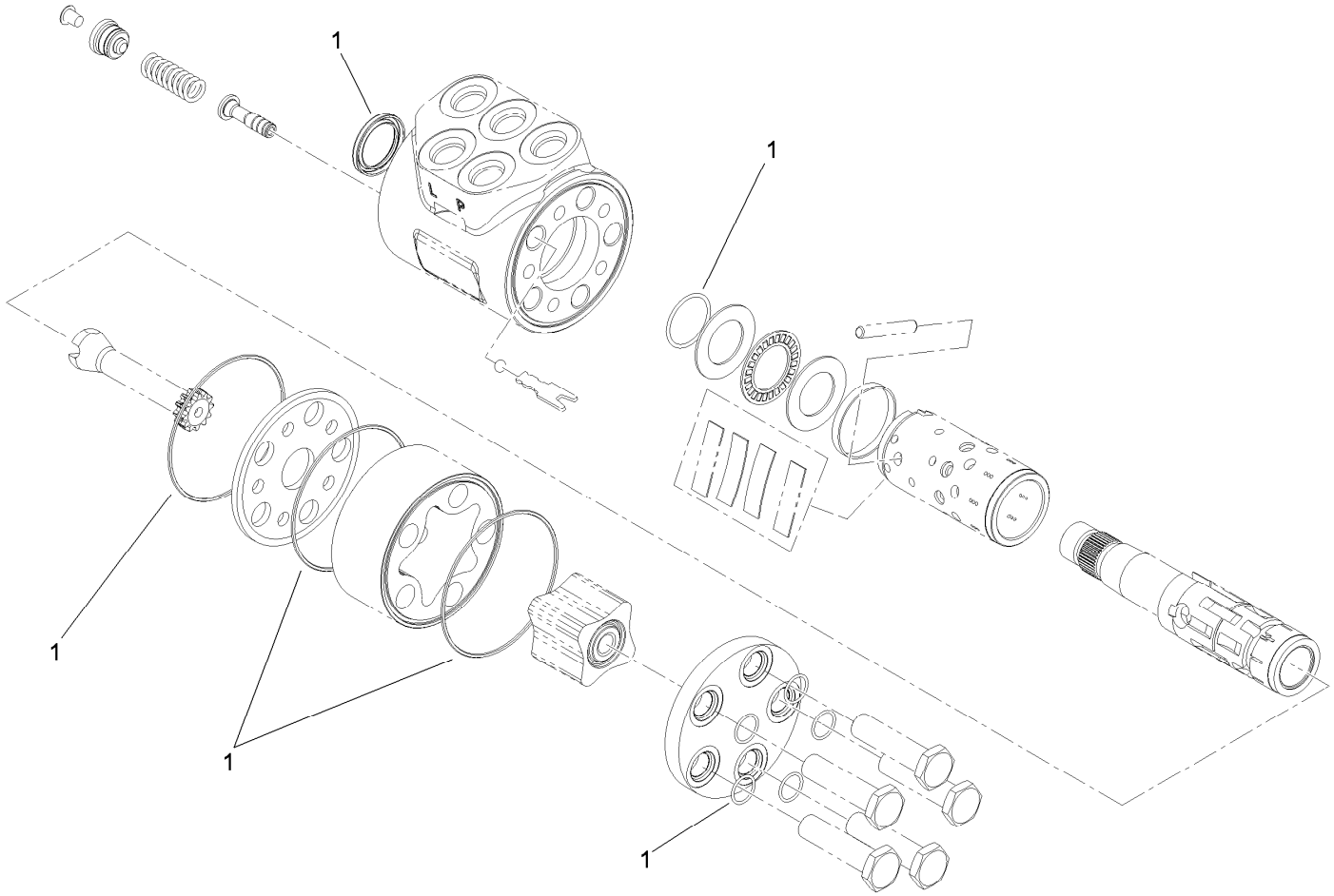

Steering Valve Assembly No. 114-4672

Ref.	*Part Number*	*Qty.*	*Description*
1	106-6716	1	Seal Kit

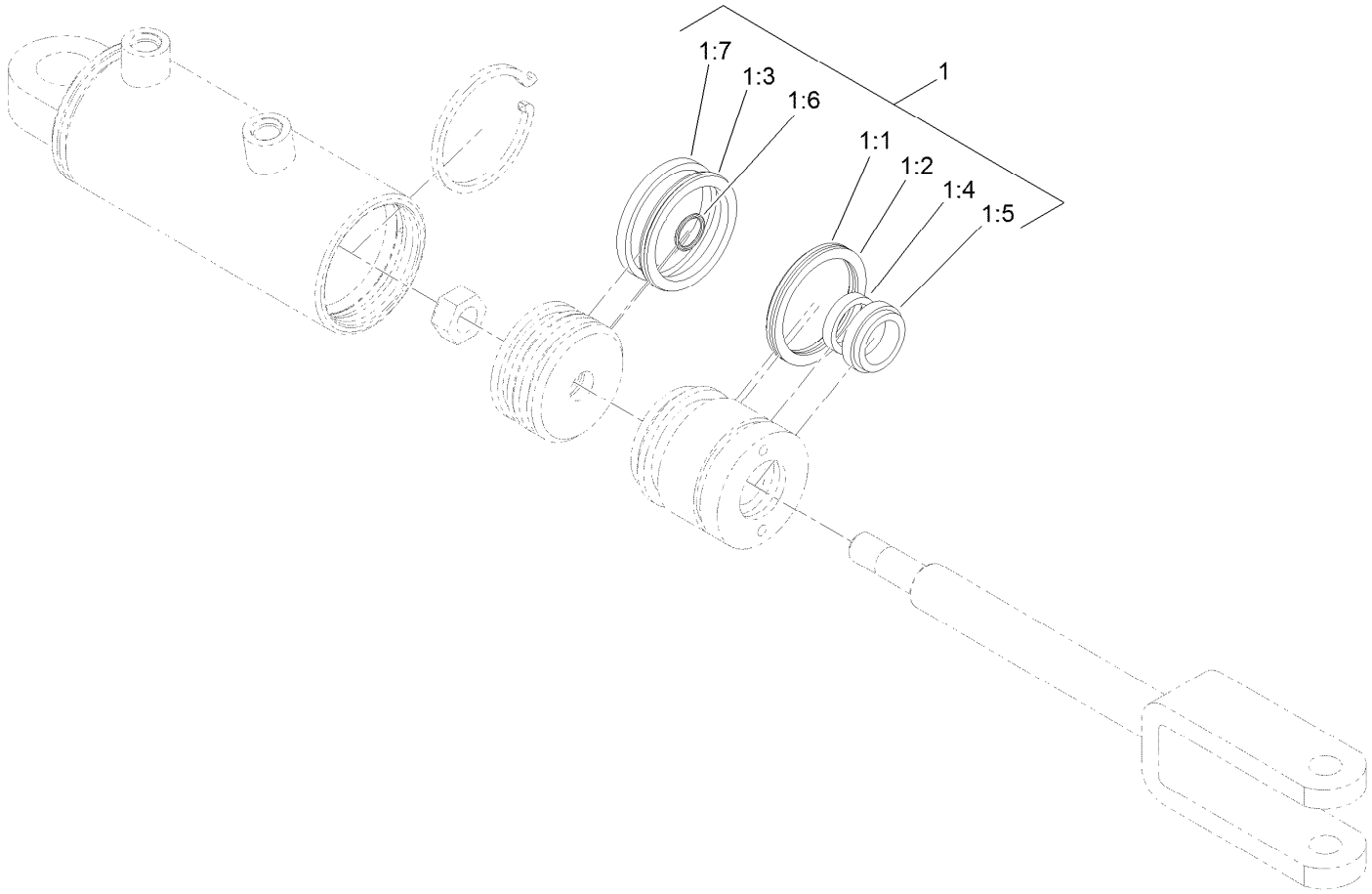

Hydraulic Cylinder Assembly No. 119-8129

Ref.	*Part Number*	*Qty.*	*Description*
1	115-3410	1	Seal Kit
1:1		1	Ring-Retaining ●
1:2		1	Backup ●
1:3		1	Bp Seal ●
1:4		1	Bs Seal ●
1:5		1	Seal-Dust ●
1:6		1	Ring-Retaining ●
1:7		1	Ring-Wear ●

● Not serviced separately

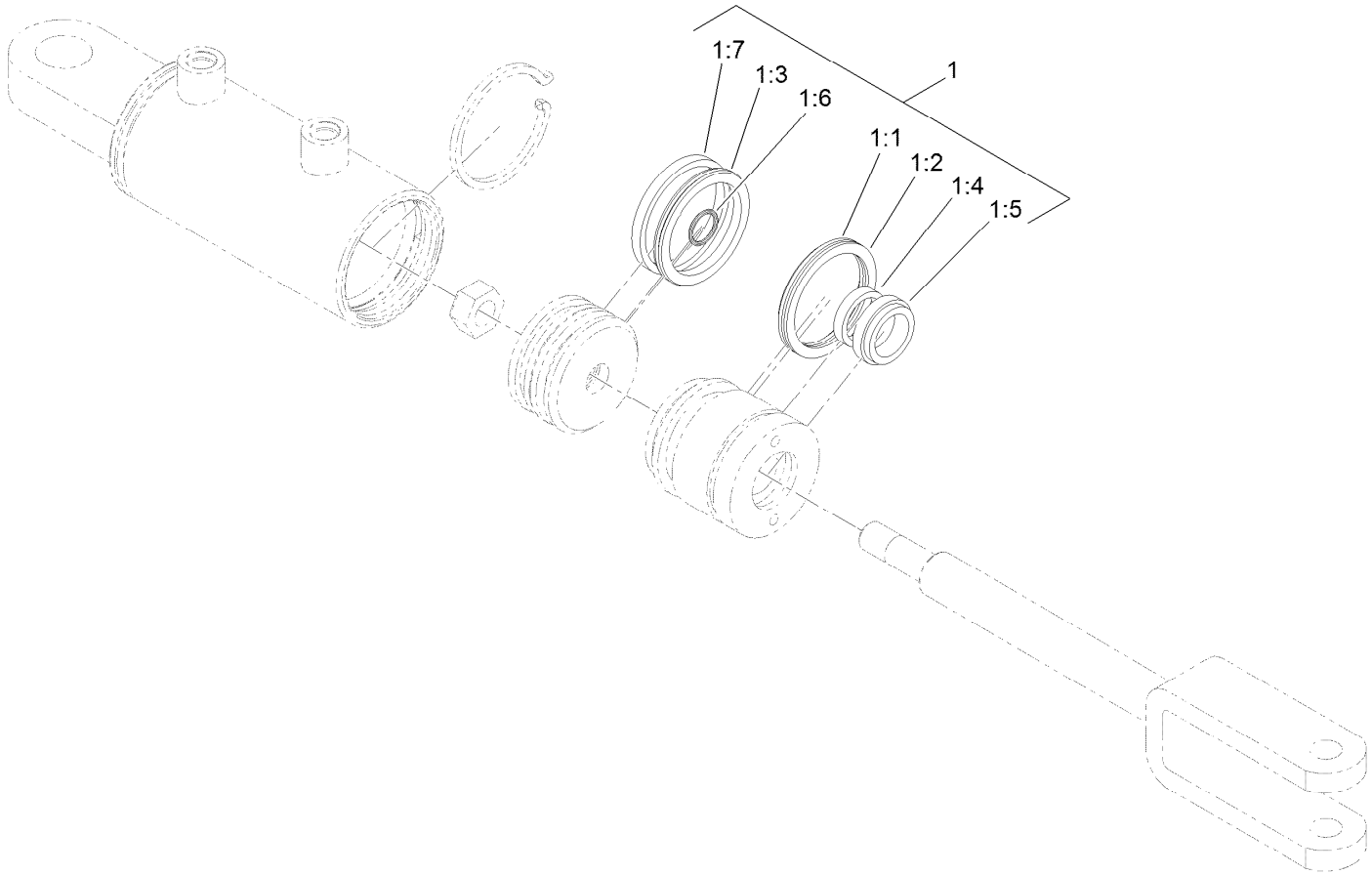

Hydraulic Cylinder Assembly No. 119-8128

Ref.	*Part Number*	*Qty.*	*Description*
1	115-3410	1	Seal Kit
1:1		1	Ring-Retaining ●
1:2		1	Backup ●
1:3		1	Bp Seal ●
1:4		1	Bs Seal ●
1:5		1	Seal-Dust ●
1:6		1	Ring-Retaining ●
1:7		1	Ring-Wear ●

● Not serviced separately

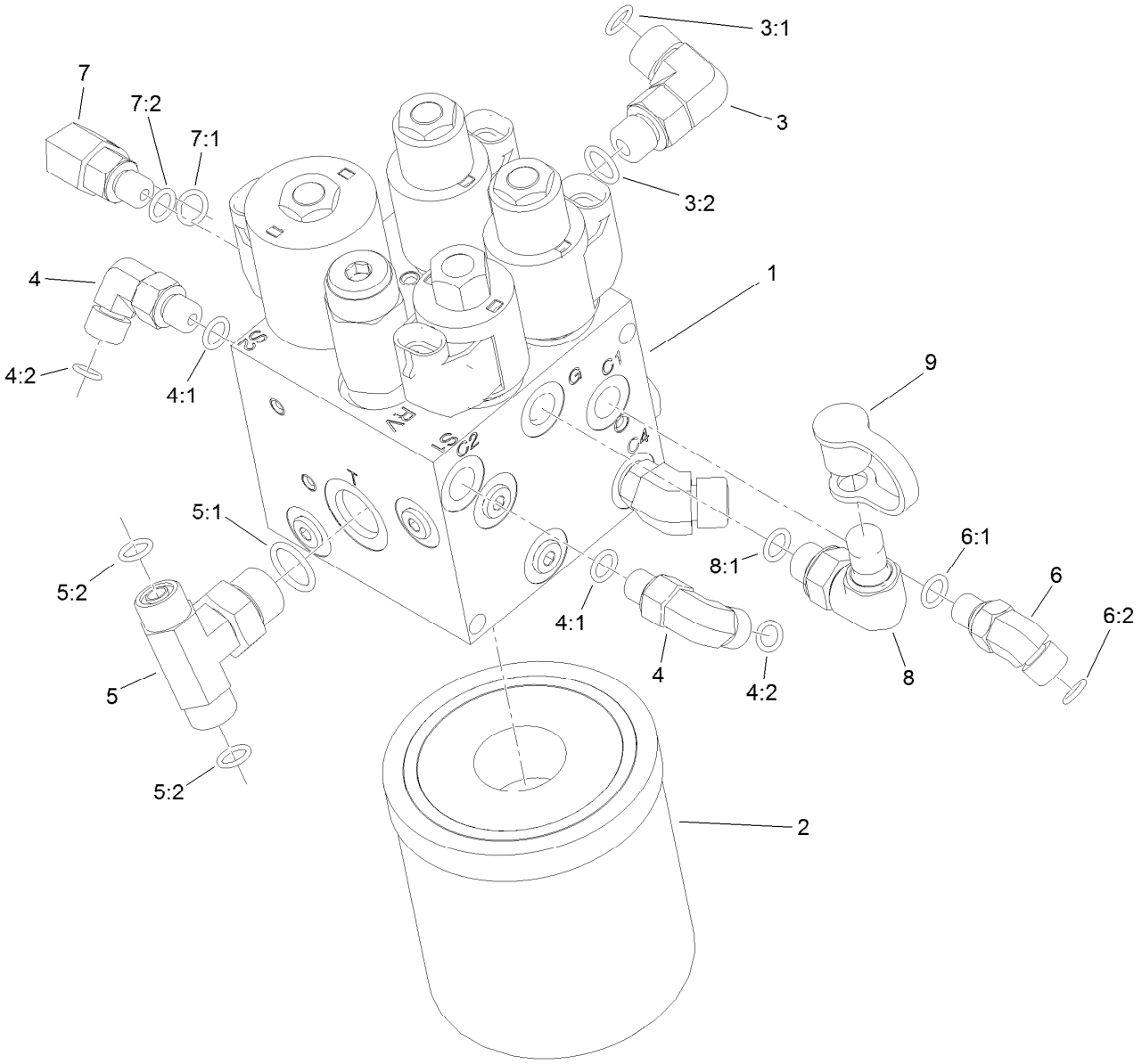

Hydraulic Lift Manifold Assembly No. 119-7118

Ref.	Part Number	Qty.	Description
1	117-9856	1	Manifold-Lift, HYD
2	108-5194	1	Filter-Oil, HYD
3	340-77	1	Fitting-HYD, 90 DEG
3:1	237-22	1	O-Ring
3:2	237-42	1	O-Ring
4	340-132	2	Fitting-HYD, 90 DEG
4:1	237-78	1	O-Ring
4:2	237-21	1	O-Ring
5	92-4799	1	Fitting-Tee, HYD
5:1	237-79	1	O-Ring

Ref.	Part Number	Qty.	Description
5:2	237-22	2	O-Ring
6	340-103	1	Fitting-HYD, 45 DEG
6:1	237-78	1	O-Ring
6:2	237-21	1	O-Ring
7	340-97	1	Fitting-HYD, 90 DEG
7:1	237-22	1	O-Ring
7:2	237-78	1	O-Ring
8	115-9147	1	Fitting-Elbow, 90 DEG
8:1	237-78	1	O-Ring
9	354-79	1	Cap-Dust

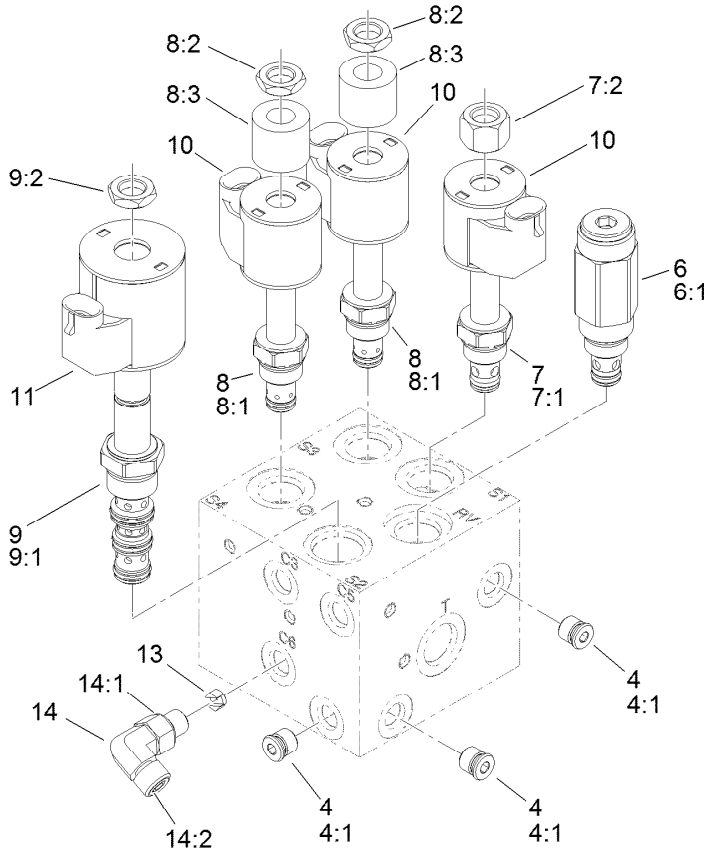

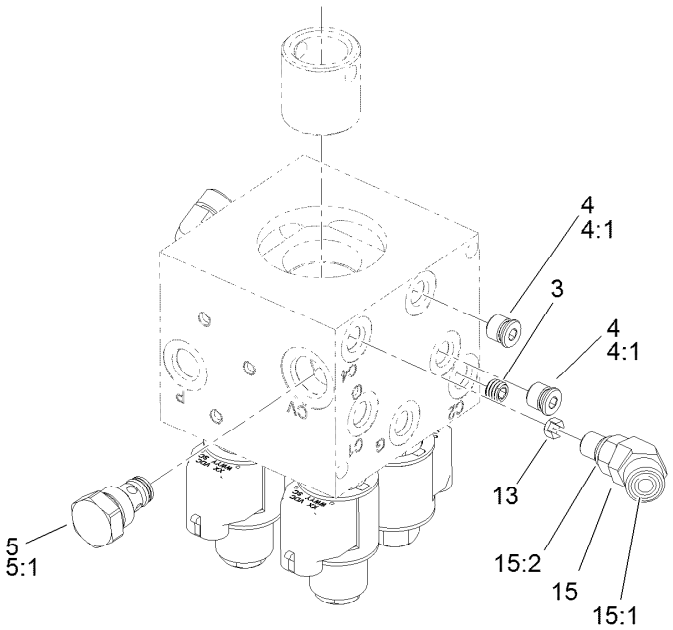

Hydraulic Lift Manifold Assembly No. 117-9856

Ref.	Part Number	Qty.	Description
3	119-7144	1	Orifice (.037 Inch)
4	353-990	5	Plug ASM
4:1	237-78	1	O-Ring
5	107-7524	1	Check Valve ASM
5:1	105-9156	1	Seal Kit
6	112-9207	1	Valve-Relief
6:1	105-9156	1	Seal Kit
7	107-7517	1	Valve-Solenoid
7:1	105-9156	1	Seal Kit
7:2	107-7812	1	Nut-Solenoid
8	110-8898	2	Valve-Solenoid
8:1	107-7527	1	Seal Kit
8:2	110-2634	1	Nut-Coil

Ref.	Part Number	Qty.	Description
8:3	110-8909	1	Spacer-Coil
9	110-8906	1	Valve-Solenoid
9:1	110-8908	1	Spool Valve Seal Kit
9:2	110-2634	1	Nut-Coil
10	110-0497	3	Coil-Solenoid
11	110-6344	1	Coil-12V, Dc
13	110-8904	2	Orifice-Control, Flow (0.028)
14	340-132	1	Fitting-HYD, 90 DEG
14:1	237-78	1	O-Ring
14:2	237-21	1	O-Ring
15	340-54	1	Elbow-45 DEG
15:1	237-22	1	O-Ring
15:2	237-78	1	O-Ring

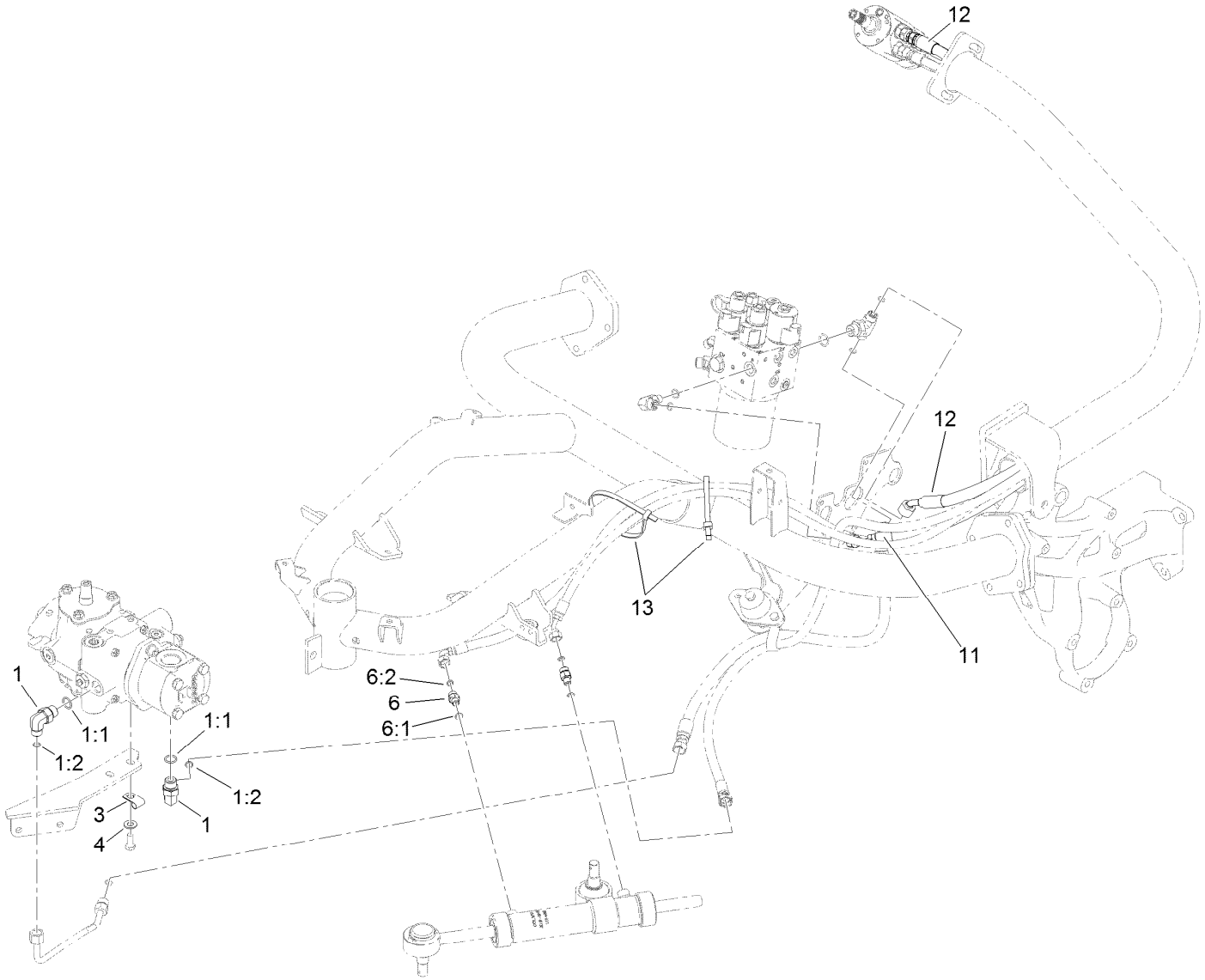

Steering Circuit Assembly (1)

Ref.	*Part Number*	*Qty.*	*Description*
1	340-18	2	Fitting-HYD, 90 DEG
1:1	237-79	1	O-Ring
1:2	237-22	1	O-Ring
3	2412-113	1	Clamp
4	3256-24	1	Washer-Flat
6	340-92	2	Fitting-HYD, Straight
6:1	237-78	1	O-Ring
6:2	237-21	1	O-Ring
11	117-3683	1	HYD Hose ASM
12	117-3684	1	HYD Hose ASM (Steering Tank)
13	3334-945	2	Tie-Cable

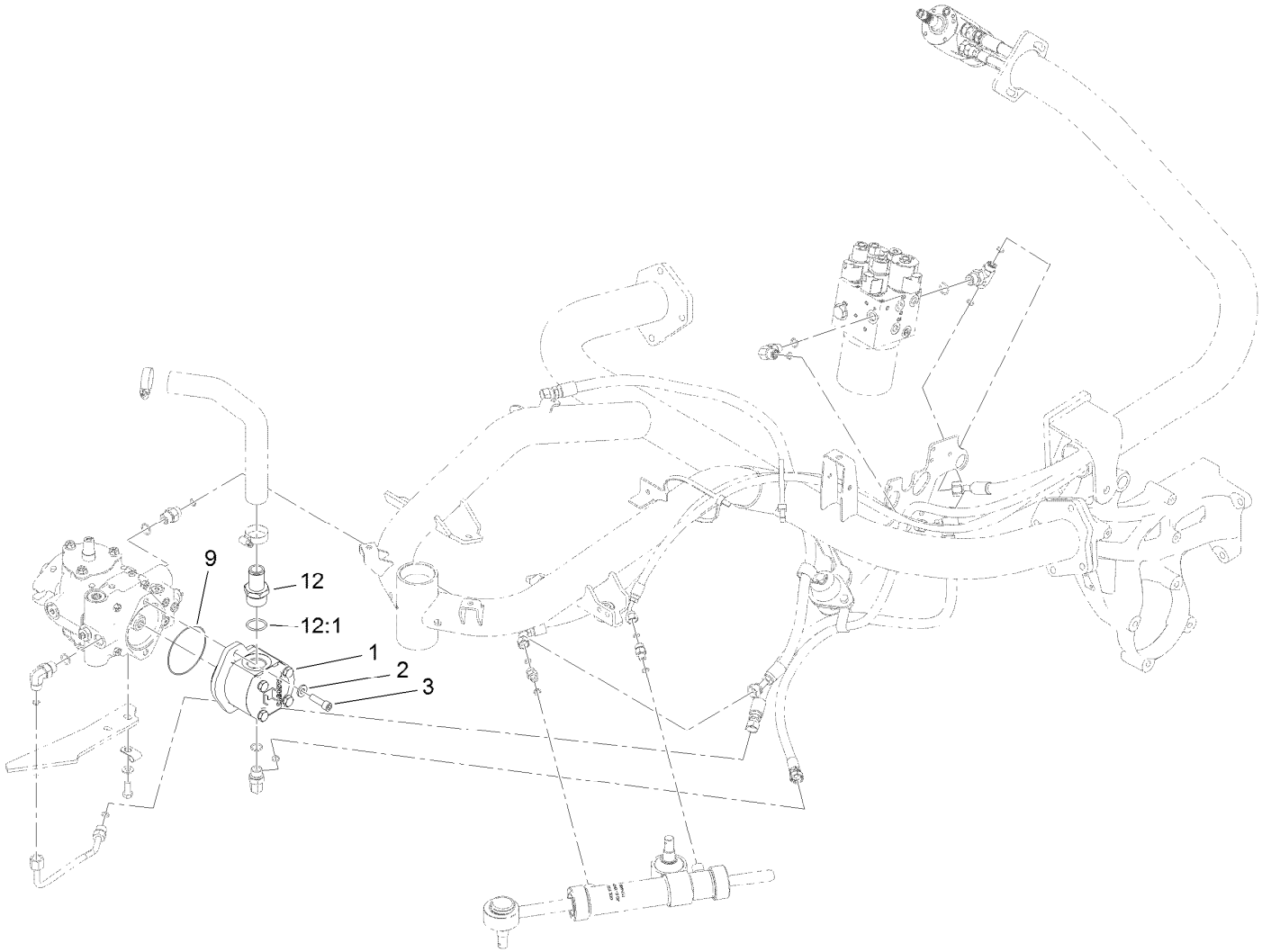

Steering Circuit Assembly (2)

Ref.	*Part Number*	*Qty.*	*Description*
1	114-9958	1	HYD Gear Pump ASM
2	100-4852	2	Washer-Hardened
3	3274-1	2	Screw-HSH
9	353-949	1	O-Ring
12	354-78	1	Connector-Hose
12:1	237-146	1	O-Ring

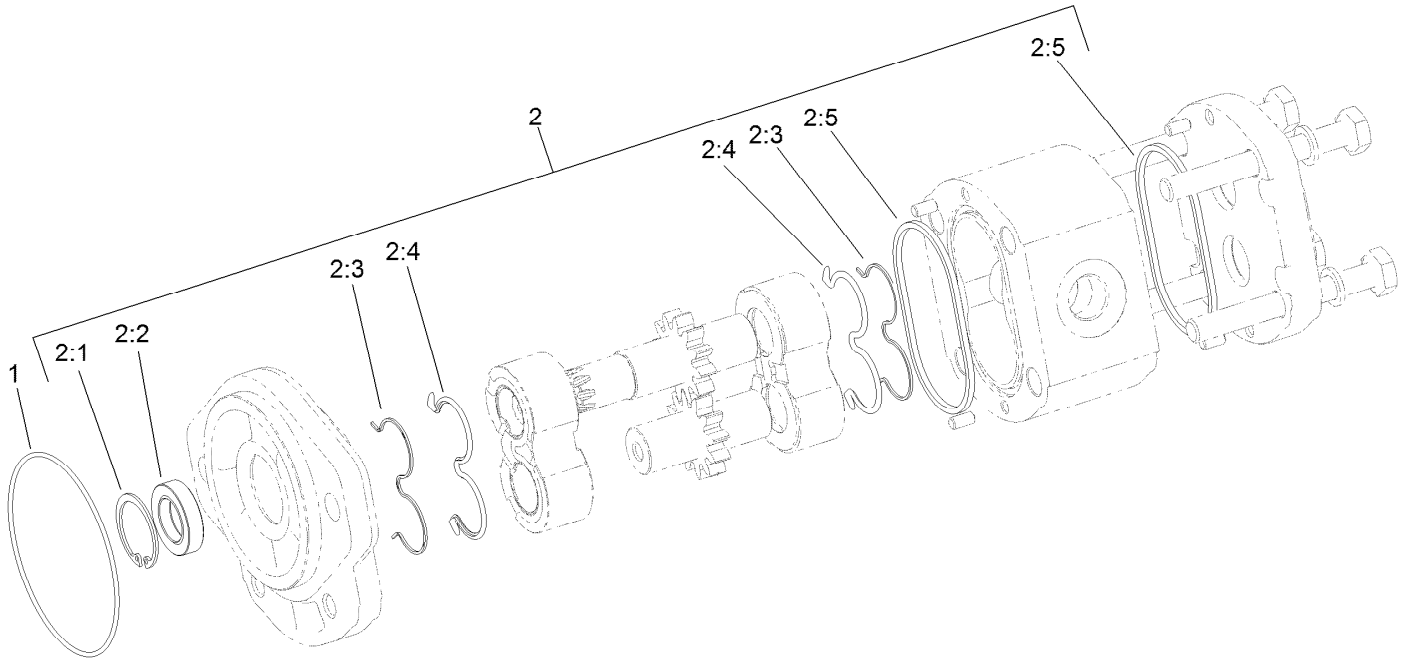

Hydraulic Gear Pump Assembly No. 114-9958

Ref.	*Part Number*	*Qty.*	*Description*
1	353-949	1	O-Ring
2	119-7135	1	Kit-Seal
2:1		1	Ring-Retaining ●
2:2		1	Shaft Seal ●
2:3		2	Anti-Extrusion Seal ●
2:4		2	Seal ●
2:5		2	Seal-Square ●

● Not serviced separately

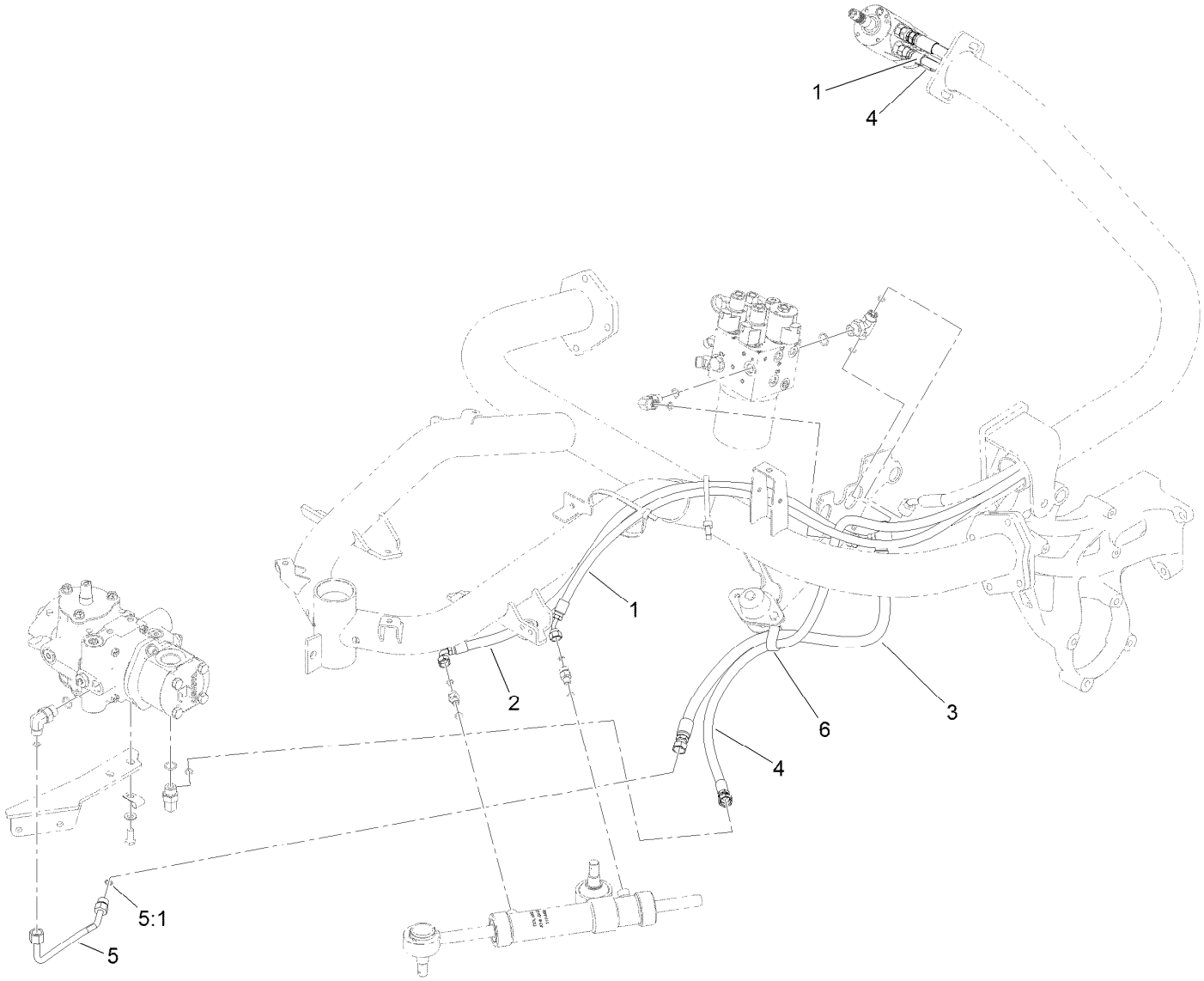

Steering Circuit Assembly (3)

Ref.	*Part Number*	*Qty.*	*Description*
1	117-3685	1	HYD Hose ASM
2	117-3688	1	HYD Hose ASM
3	119-2059	1	HYD Hose ASM
4	119-2067	1	Hose-HYD
5	120-1952	1	HYD Tube ASM
5:1	237-22	1	O-Ring
6	120-1959	1	Clamp-R, Double

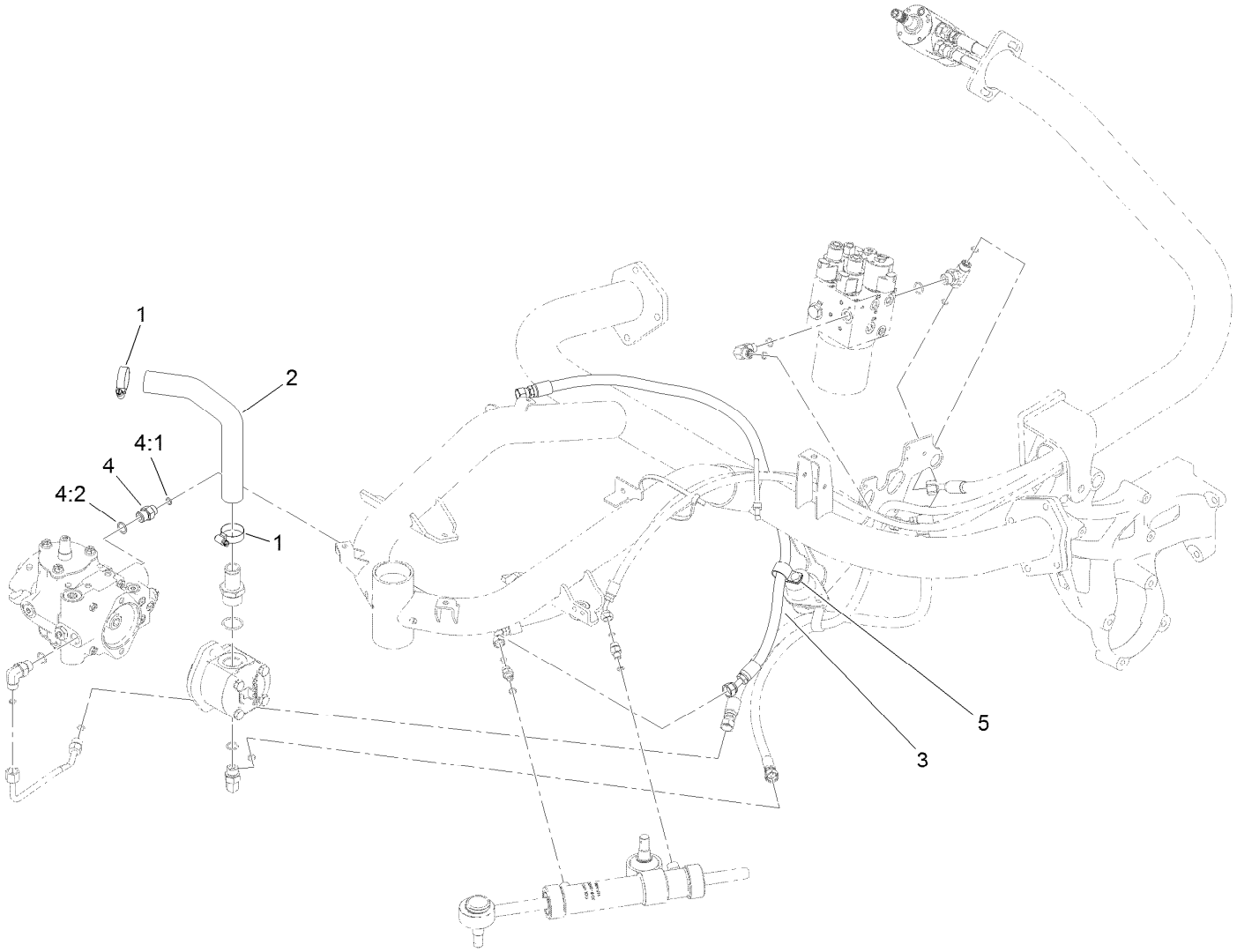

Steering Circuit Assembly (4)

Ref.	*Part Number*	*Qty.*	*Description*
1	1-633989	2	Clamp-Hose
2	119-2068	1	Hose-Suction
3	120-1963	1	HYD Hose ASM
4	340-3	1	Adapter
4:1	237-22	1	O-Ring
4:2	237-79	1	O-Ring
5	2412-39	1	R-Clamp

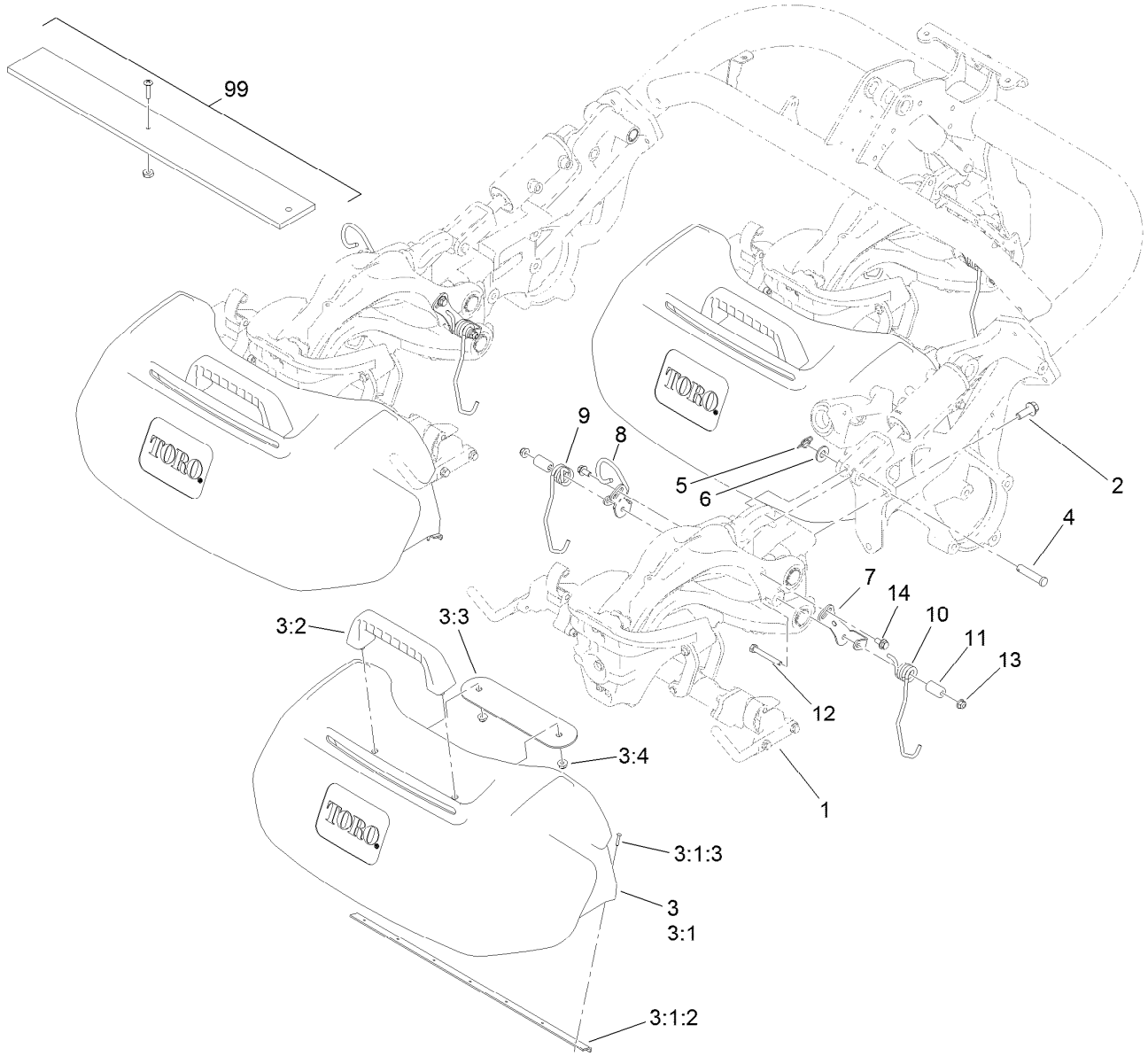

Suspension and Basket Assembly

Ref.	Part Number	Qty.	Description
1		3	Suspension ASM ●
2	117-9035	9	Screw-HHF
3	117-8096	3	Basket ASM
3:1	117-8094	1	Grass Basket ASM
3:1:2	115-5274	1	Support-Basket
3:1:3	3290-382	7	Rivet-Pop
3:2	117-8088	1	Handle-Grab
3:3	117-8092-03	1	Plate-Mounting
3:4	104-8300	2	Nut-Flange, NI
4	92-2739	3	Pin-Clevis
5	112-1491	3	Pin-Cotter
6	29-8910	3	Washer

Ref.	Part Number	Qty.	Description
7	117-6822	3	Retainer-Spring, LH
8	120-4617	3	Bracket ASM
9	117-6826	3	Spring-Stabilizer, RH
10	117-6827	3	Spring-Stabilizer, LH
11	117-6825	6	Spacer
12	322-12	6	Screw-HH
13	104-8300	6	Nut-Flange, NI
14	114-7728	6	Screw-Threadlock
99	32122-22	1	Screw-PTH
99	3219-14	1	Nut-Hex
99	65-8320	1	Bar-Gauge

● Not serviced separately

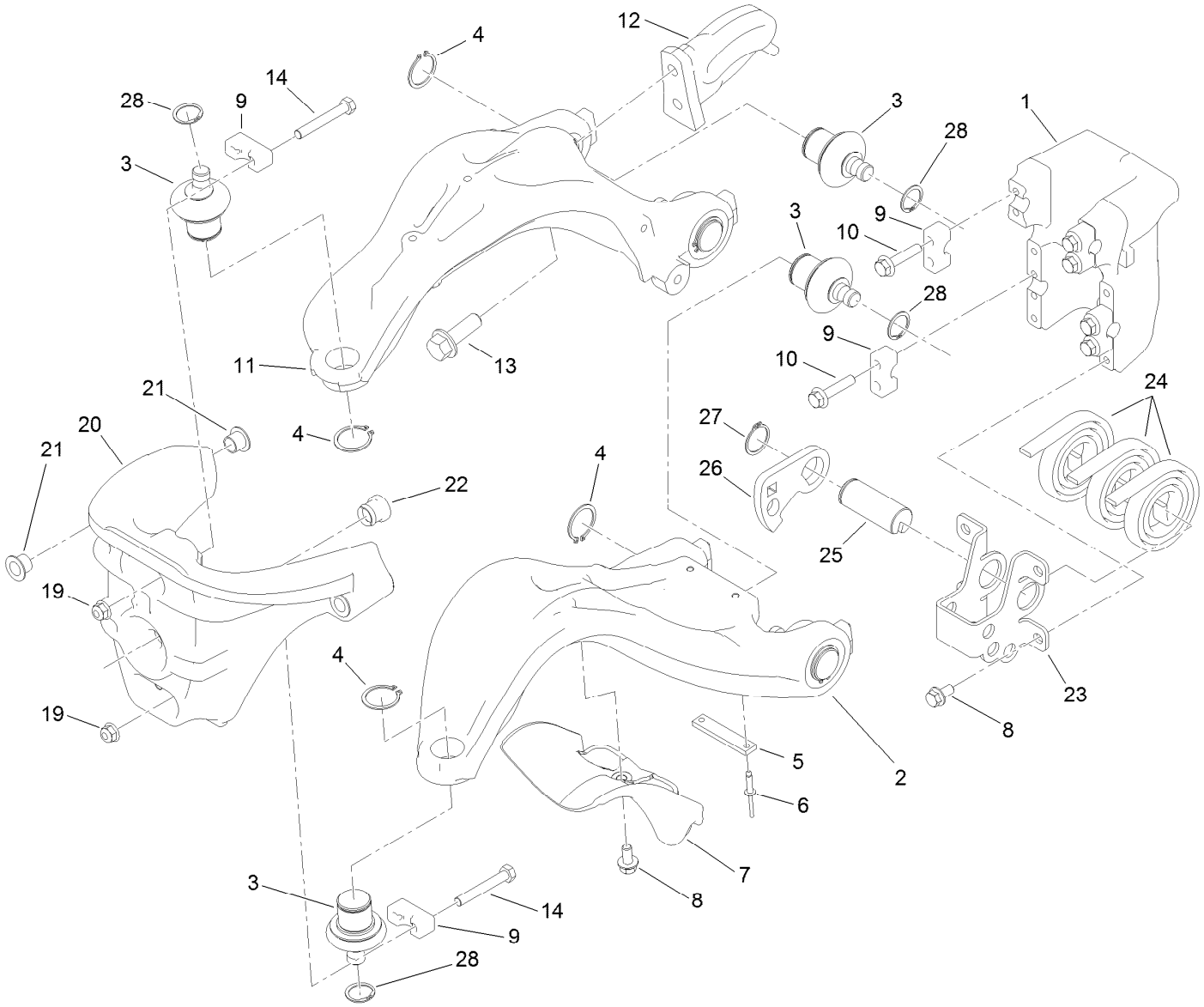

Suspension A-Arm Assembly

Ref.	Part Number	Qty.	Description
1	117-9480	1	Mount-Pivot, A-Arms
2	117-6656	1	A-Arm, Lower
3	117-6658	6	Balljoint
4	120-3225	6	Ring-Retaining, EXT
5	117-6674	1	Plate-Striker
6	3269-28	2	Rivet-Pop
7	117-6755	1	Stop-Steering
8	114-7728	5	Screw-Threadlock
9	112-5647	6	Clamp
10	132-3837	8	Screw-HHF
11	117-6648	1	A-Arm, Upper
12	117-6650	1	Plate-Lift

Ref.	Part Number	Qty.	Description
13	100-6116	2	Screw-HHF
14	132-3838	4	Screw-HH
19	104-8300	4	Nut-Flange, NI
20	120-3216	1	Steering Head ASM
21	93-2561	4	Bushing-Flange
22	117-6819	1	Grommet
23	117-6730	1	Mount-Counterbalance
24	114-9306	3	Spring
25	117-6608	1	Pin
26	117-6738	1	Arm-Tensioner
27	32151-29	1	Ring-Retaining
28	120-3226	6	Ring-Retaining, EXT (Clip)

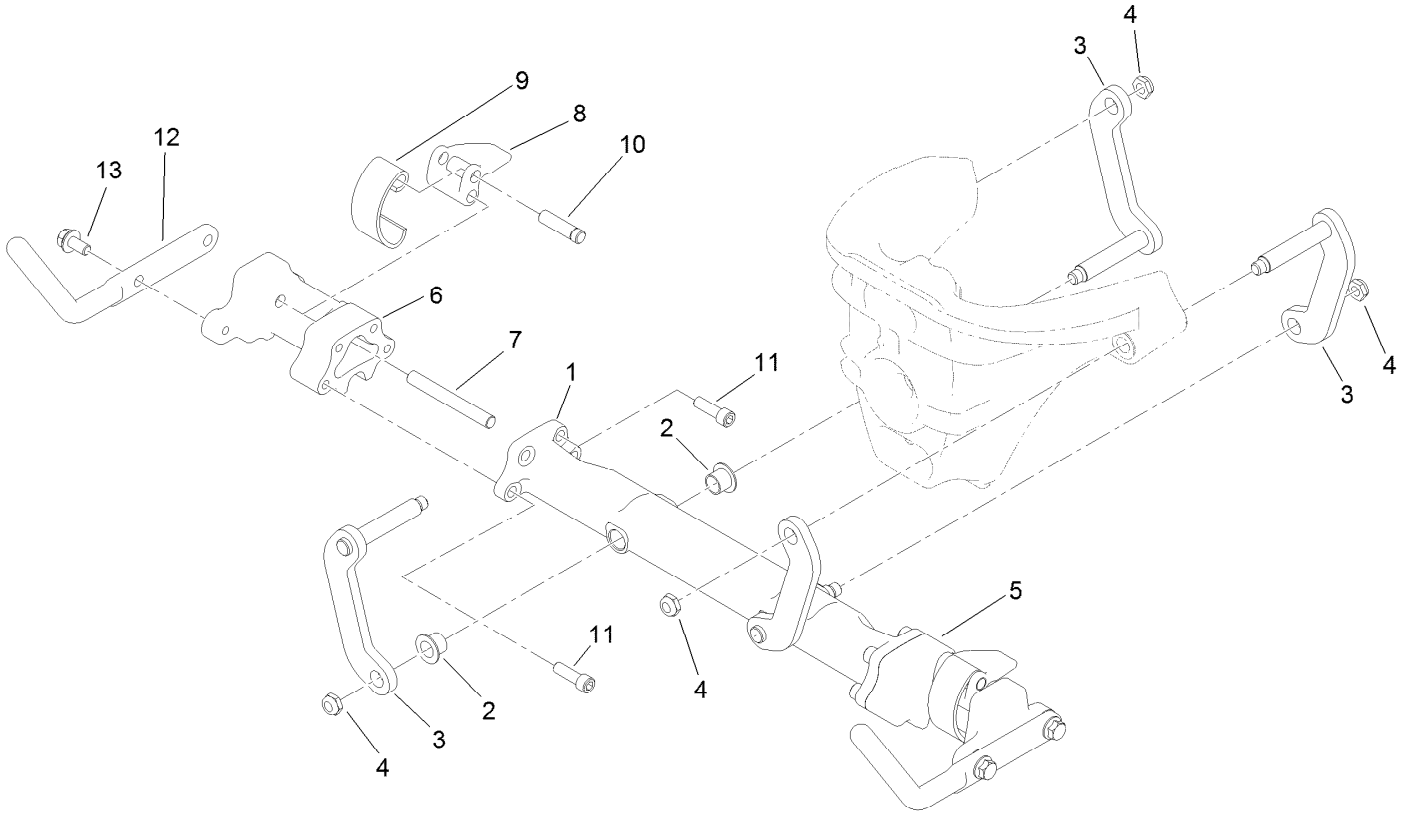

Suspension Crossarm Assembly

Ref.	*Part Number*	*Qty.*	*Description*
1	120-3217	1	Crossarm ASM
2	93-2561	4	Bushing-Flange
3	117-6654	4	Link ASM
4	3296-59	4	Nut-Lock, NI
5	117-9482	1	Mount-Cross Arm, LH
6	117-9492	1	Mount-Cross Arm, RH
7	114-8051	2	Pin-Pivot
8	114-8047	2	Lever
9	114-8048	2	Spring
10	114-8049	2	Pin-Pivot
11	120-3227	8	Screw-HSH
12	117-8091-03	2	Horn-Basket
13	114-7728	4	Screw-Threadlock

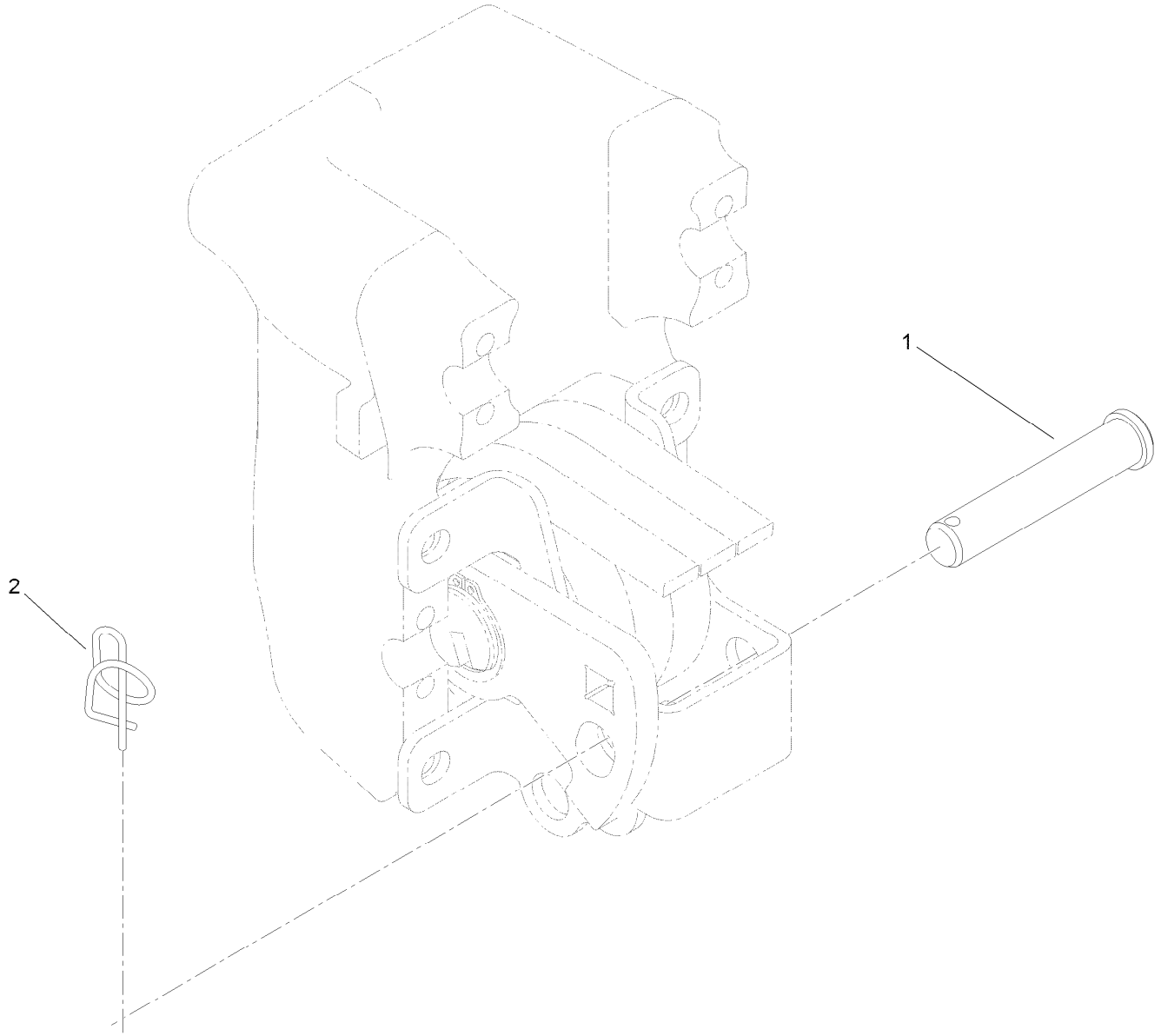

Suspension Pin Position Assembly

Ref.	Part Number	Qty.	Description
1	100-6541	3	Pin-Clevis
2	112-1491	3	Pin-Cotter

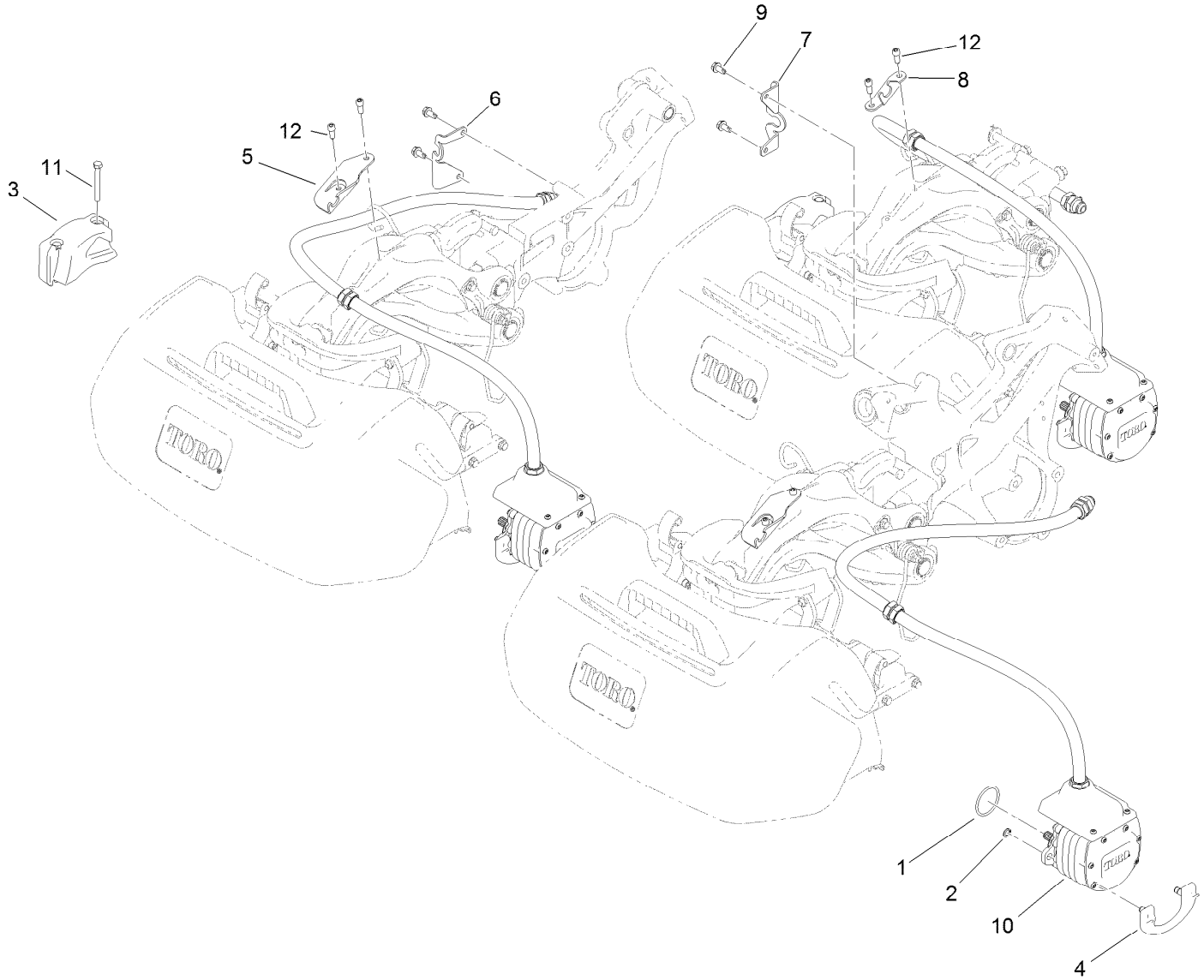

Electric Reel Motor Assembly

Ref.	Part Number	Qty.	Description
1	115-3298	3	O-Ring
2	115-5206	6	Ring-Retaining
3	117-6774-03	3	Weight-Electric
4	115-5389	3	Cam-Mount, Motor
5	119-7487	2	Bracket-Clamp, Hose
6	120-4551	1	Bracket-Hose
7	120-4531	1	Bracket-Hose
8	119-7540	1	Bracket-Hose, Rear
9	32104-32	4	Screw-HWH
10	119-7575	3	Electric Reel Motor ASM
11	322-13	6	Screw-HH
12	100-2401	6	Screw-HSH

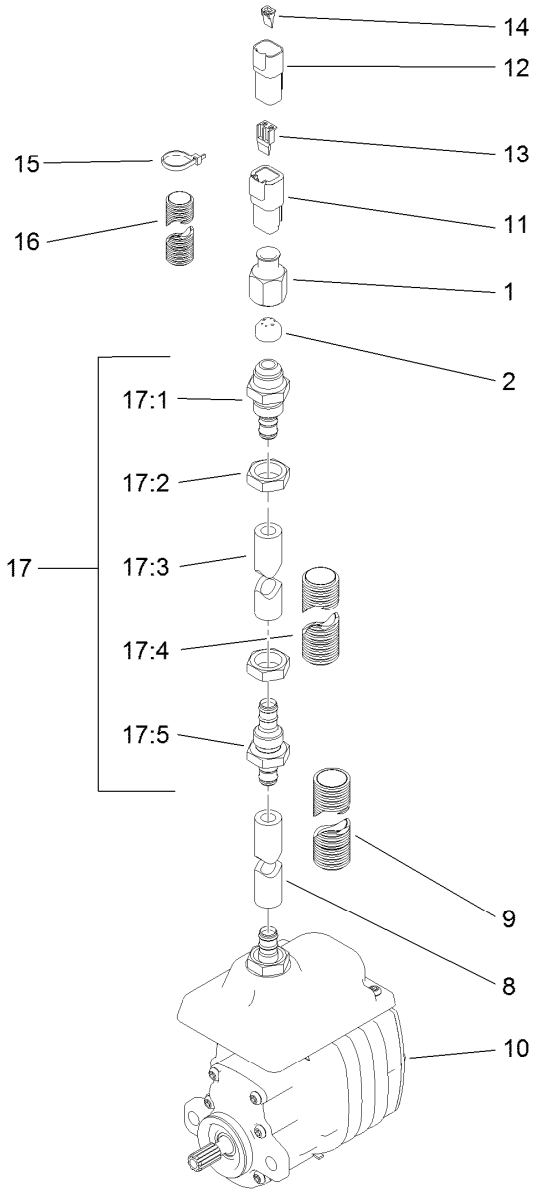

Electric Reel Motor Assembly No. 119-7575

Ref.	Part Number	Qty.	Description
1	119-7481	1	Nut-Ferrule
2	119-7480	1	Ferrule
8	119-7476	1	Hose
9	119-7558	1	Tubing-Convoluted, Slit
10		1	Motor-Electric ●
11	32160-245	1	Connector
12	32160-315	1	Connector
13	32180-083	1	Wedge
14	32180-084	1	Wedge

Ref.	Part Number	Qty.	Description
15	3290-378	4	Tie-Cable
16	120-3223	1	Tubing-Convoluted, Slit
17	120-4532	1	Hose ASM
17:1	119-7545	1	Fitting-Bulkhead
17:2	119-7457	2	Nut
17:3	119-7524	1	Hose
17:4	119-7559	1	Tubing-Convoluted, Slit
17:5	119-7544	1	Fitting-Bulkhead

● Not serviced separately

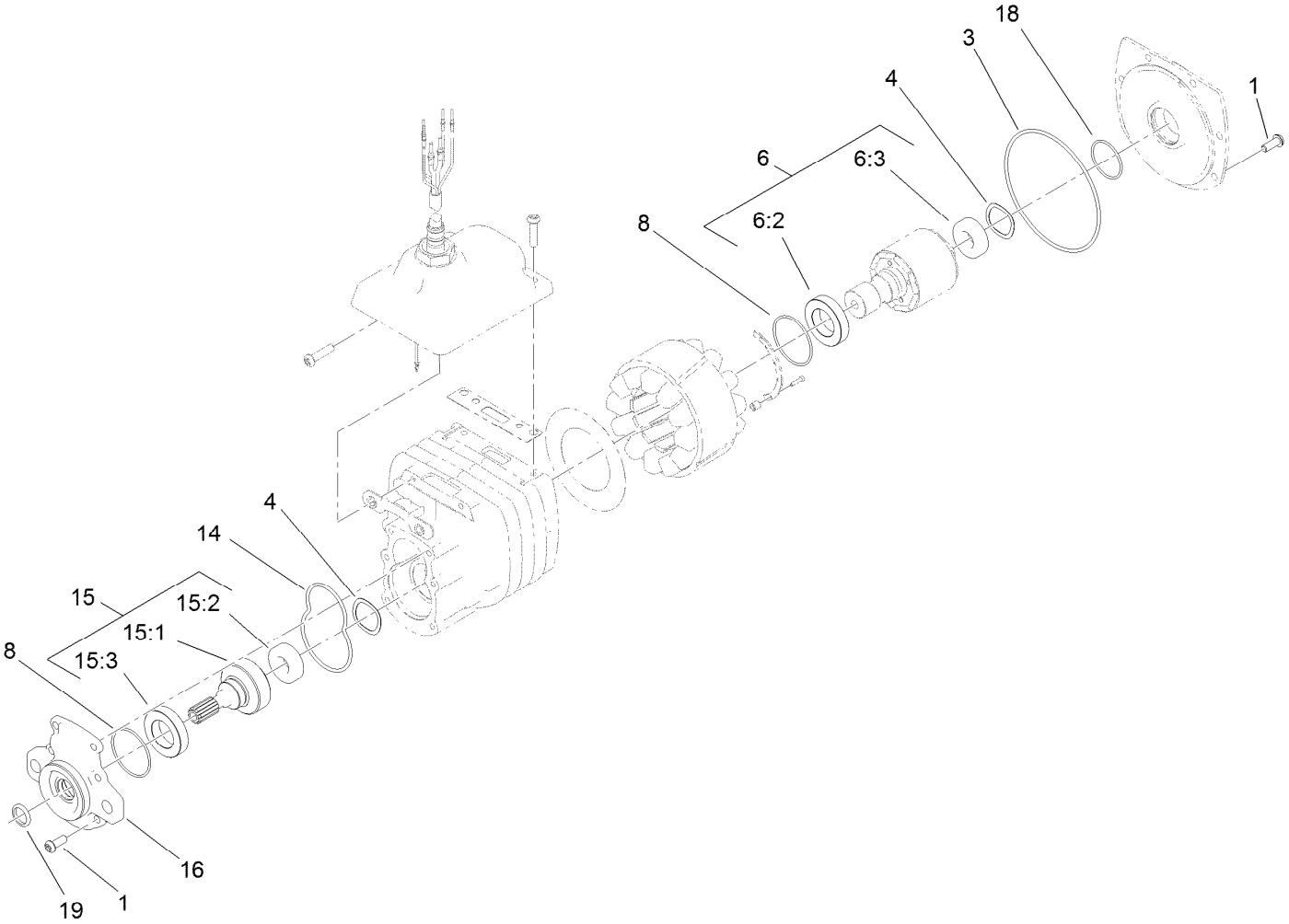

Electric Motor Assembly

Ref.	Part Number	Qty.	Description
1	120-4559	12	Screw-Bhcs
3	112-9609	1	O-Ring
4	112-5163	2	Washer-Wave
6	119-7450	1	Rotor ASM
6:2	112-5158	1	Bearing-Ball
6:3	120-4557	1	Bearing
8	112-9616	2	O-Ring
14	112-9611	1	O-Ring
15	115-4782	1	Output Gear ASM
15:1	112-5153	1	Gear-Output
15:2	120-4557	1	Bearing
15:3	112-5158	1	Bearing-Ball
16	115-4777	1	Cover-Gearbox
18	119-1156	1	O-Ring
19	119-7451	1	Seal-Oil

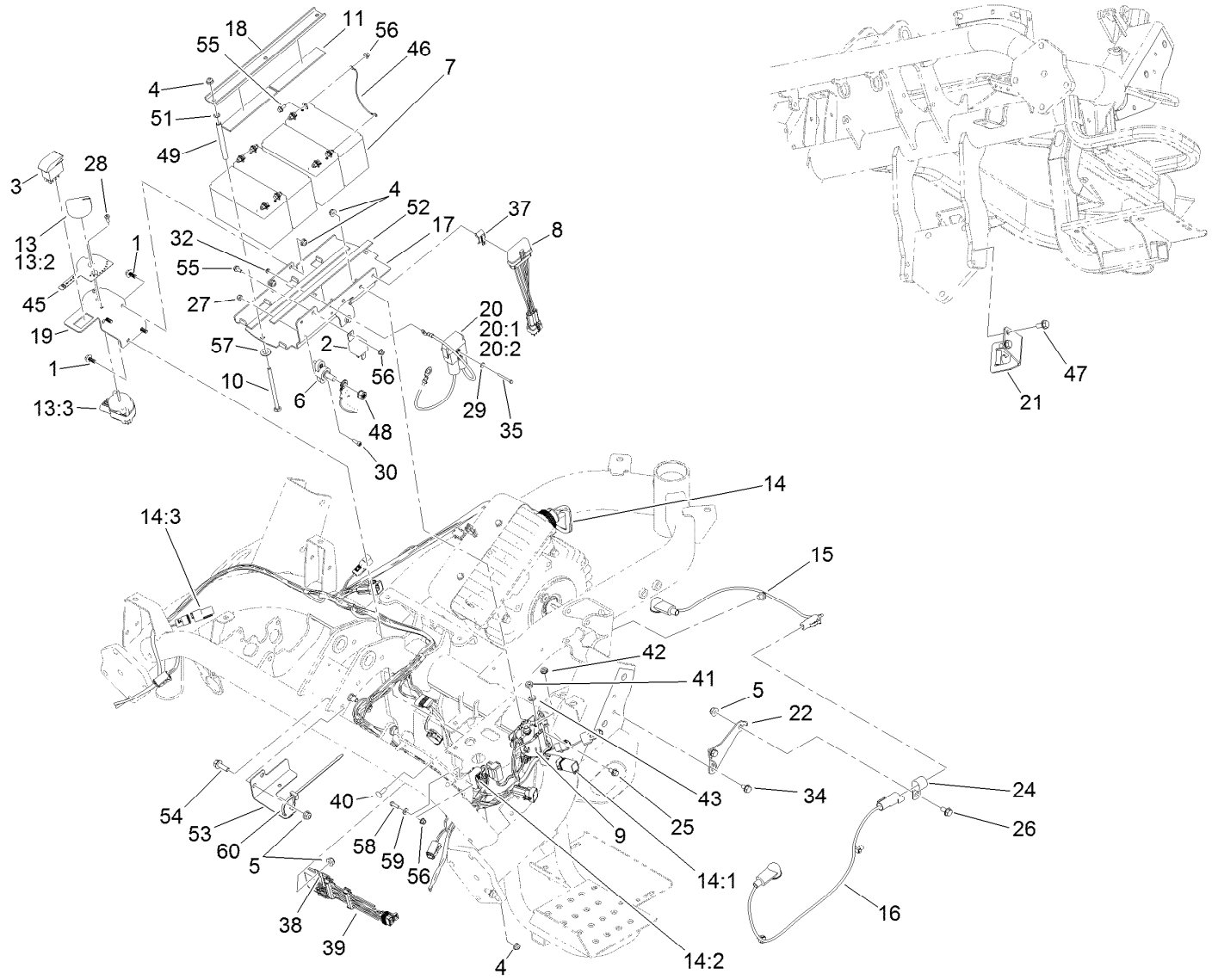

Electric Mow Battery Assembly

Ref.	Part Number	Qty.	Description
1	99-6810	5	Screw-HHF
2	99-7435	1	Relay-Power
3	100-8490	1	Switch-Rocker
4	104-7201	8	Nut-Flange, NI
5	104-8300	3	Nut-Flange, NI
6	110-8823	1	Block-Junction
7	112-9621	4	Battery- Nonspillable
8	112-9630	1	Module-Reel, I.D.
9	115-4765	1	Contactor
10	120-4585	3	Screw-CARR
11	115-9477	2	Strip-Foam
13	119-1081	1	Hmi ASM
13:2	119-1083	1	Knob-Hmi
13:3	119-0737	1	Sensor-Position
14	119-1753	1	Wire Harness ASM
14:1	119-7781	1	Diode-Sealed
14:2	120-3958	1	Fuse-Blade, 10A
14:3	32180-043	2	Resistor-120 Ohm
15	119-1783	1	Harness-Wire, Battery Disconnect

Ref.	Part Number	Qty.	Description
16	119-1784	1	Harness-Wire, Battery Disconnect
17	119-2103-01	1	Plate-Battery
18	119-2104-01	1	Channel-Clamp, Battery
19	119-2117-01	1	Bracket-Speed, Reel
20	119-5773	1	Harness-Wire
20:1	120-3954	1	Fuse-60 Amp
20:2	32180-085	1	Fuse-Cover
21	119-7566-03	1	Bracket-Hose, Rear
22	119-8175	1	Bracket-Disconnect
24	2412-4	1	Clamp
25	3234-13	2	Screw-HHF
26	3234-7	1	Screw-HHF
27	3296-21	2	Nut-Lock, NI
28	3250-31	2	Screw-PPH
29	3256-12	2	Washer-Flat
30	3273-26	2	Screw-HSH
32	3296-9	2	Nut-Lock
34	32104-82	2	Screw-HHF
35	32105-21	2	Screw-HH
37	32180-011	1	Clip-Connector

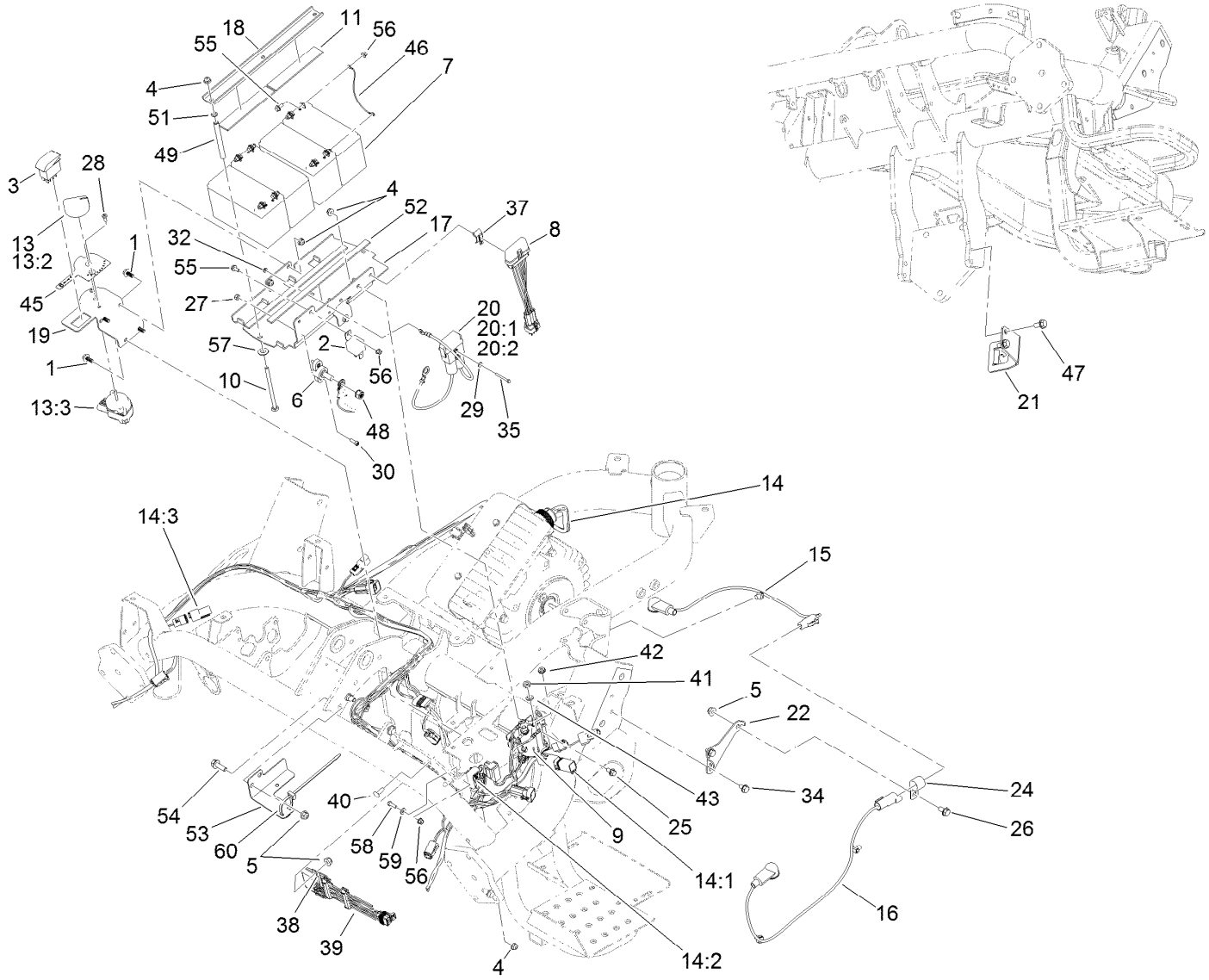

Electric Mow Battery Assembly (continued)

Ref.	Part Number	Qty.	Description
38	32180-020	1	Clip-Connector
39	119-4330	1	Isolated Can Module ASM
40	1-807512	1	Bolt-CARR
41	3220-2	2	Nut-Jam
42	32149-8	2	Nut-Keps
43	3253-4	2	Washer-Lock
45	115-8224	1	Decal-Control, Reel Speed
46	119-1782	3	Battery Jumper Wire Harness ASM
47	32144-14	2	Screw-HWHTF
48	32149-10	1	Nut-Keps

Ref.	Part Number	Qty.	Description
49	120-4586	3	Tube
51	1-803037	3	Nut-Retaining
52	115-8827	2	Foam-Strip
53	120-4570	1	Bracket-Harness
54	3234-29	2	Screw-HHF
55	120-4579	9	Screw-Hfh
56	120-4580	10	Nut-HF
57	48-9220	3	Washer
58	60-6910	1	Screw-HH
59	3256-14	1	Washer-Flat
60	3290-378	1	Tie-Cable

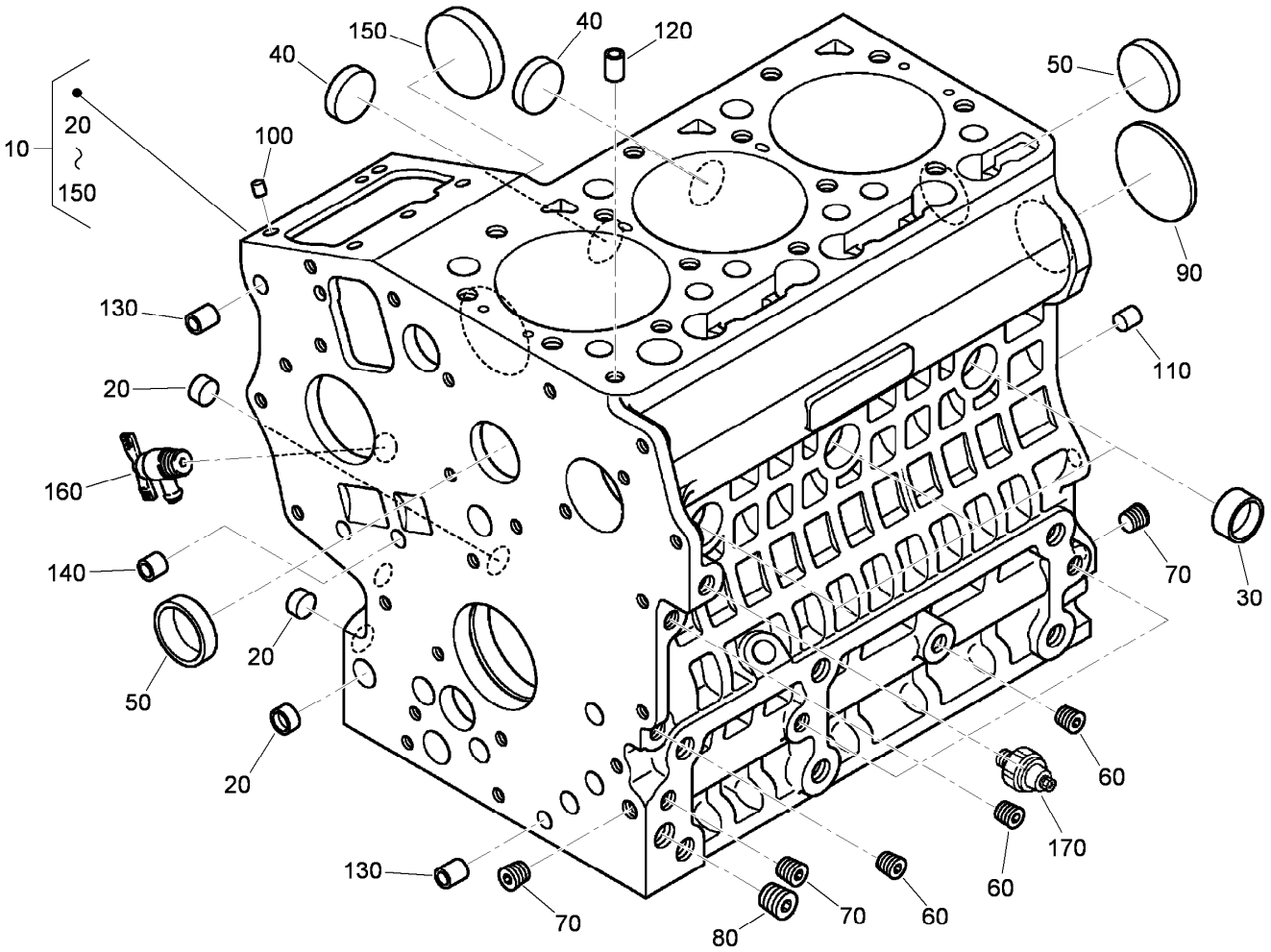

Crankcase Assembly

Ref.	Part Number	Qty.	Description
10	120-3120	1	Crankcase ASM
20	100-2019	3	Cap-Sealing
30	100-2020	3	Cap-Sealing
40	110-3702	2	Cap-Sealing
50	98-9398	2	Cap-Sealing
60	98-9687	5	Plug
70	98-7487	3	Plug
80	98-7488	1	Plug
90	100-1851	1	Plug-Expansion

Ref.	Part Number	Qty.	Description
100	98-9375	2	Pin-Straight
110	98-9377	2	Pin-Straight
120	98-7506	1	Pin-Pipe
130	98-9387	2	Pin-Pipe
140	100-2051	2	Pin-Pipe
150	100-1991	1	Cover-Fuel, Camshaft
160	120-3121	1	Draincock ASM
170	98-7764	1	Switch-Oil

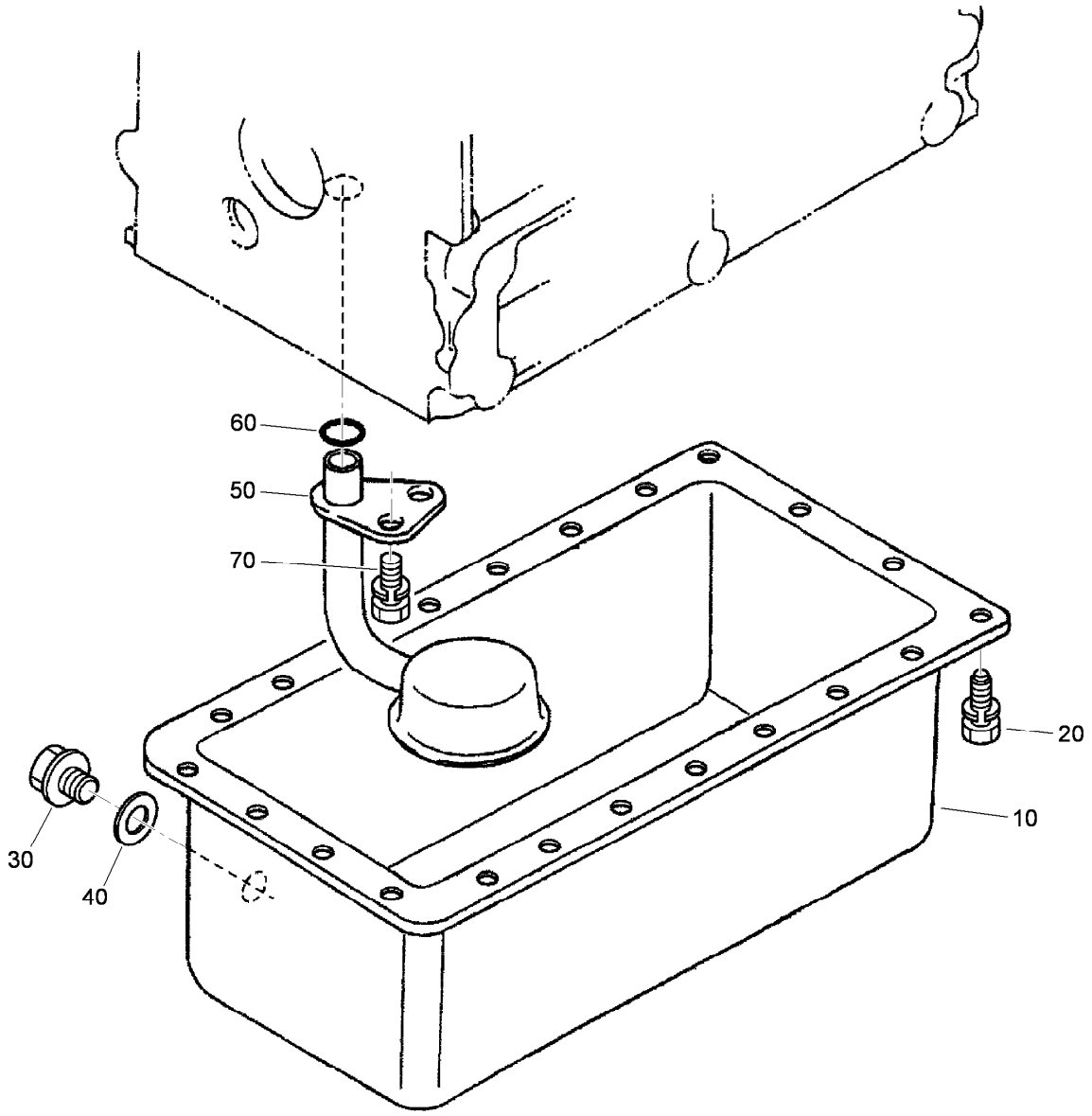

Oil Pan Assembly

Ref.	Part Number	Qty.	Description
10	120-3122	1	Oil Pan ASM
20	98-9351	22	Bolt
30	114-8151	1	Plug-Drain
40	98-7524	1	Gasket
50	100-2001	1	Strainer-Pickup, Oil
60	105-3776	1	O-Ring
70	100-9195	1	Bolt

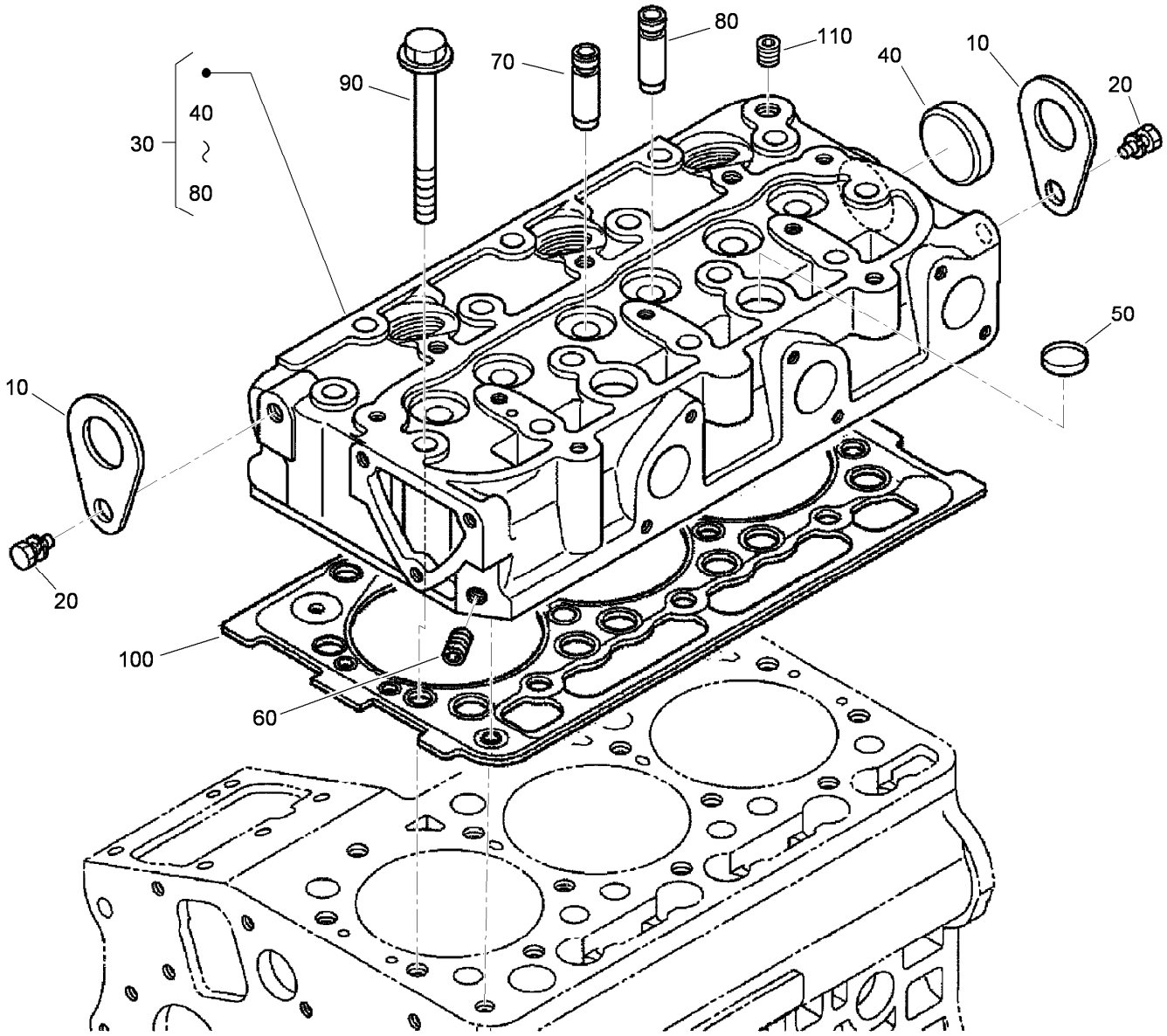

Cylinder Head Assembly

Ref.	Part Number	Qty.	Description
10	98-7531	2	Hook-Engine
20	98-7526	2	Bolt
30	120-3123	1	Cylinder Head ASM
40	105-3705	1	Cap-Sealing
50	98-9389	2	Cap-Sealing
60	98-7540	1	Plug
70	100-1882	3	Guide-Valve, Inlet
80	100-1883	3	Guide-Valve, Exhaust
90	100-1820	14	Bolt-Head, Cylinder
100	112-2520	1	Gasket-Head, Cylinder
110	98-9444	1	Plug

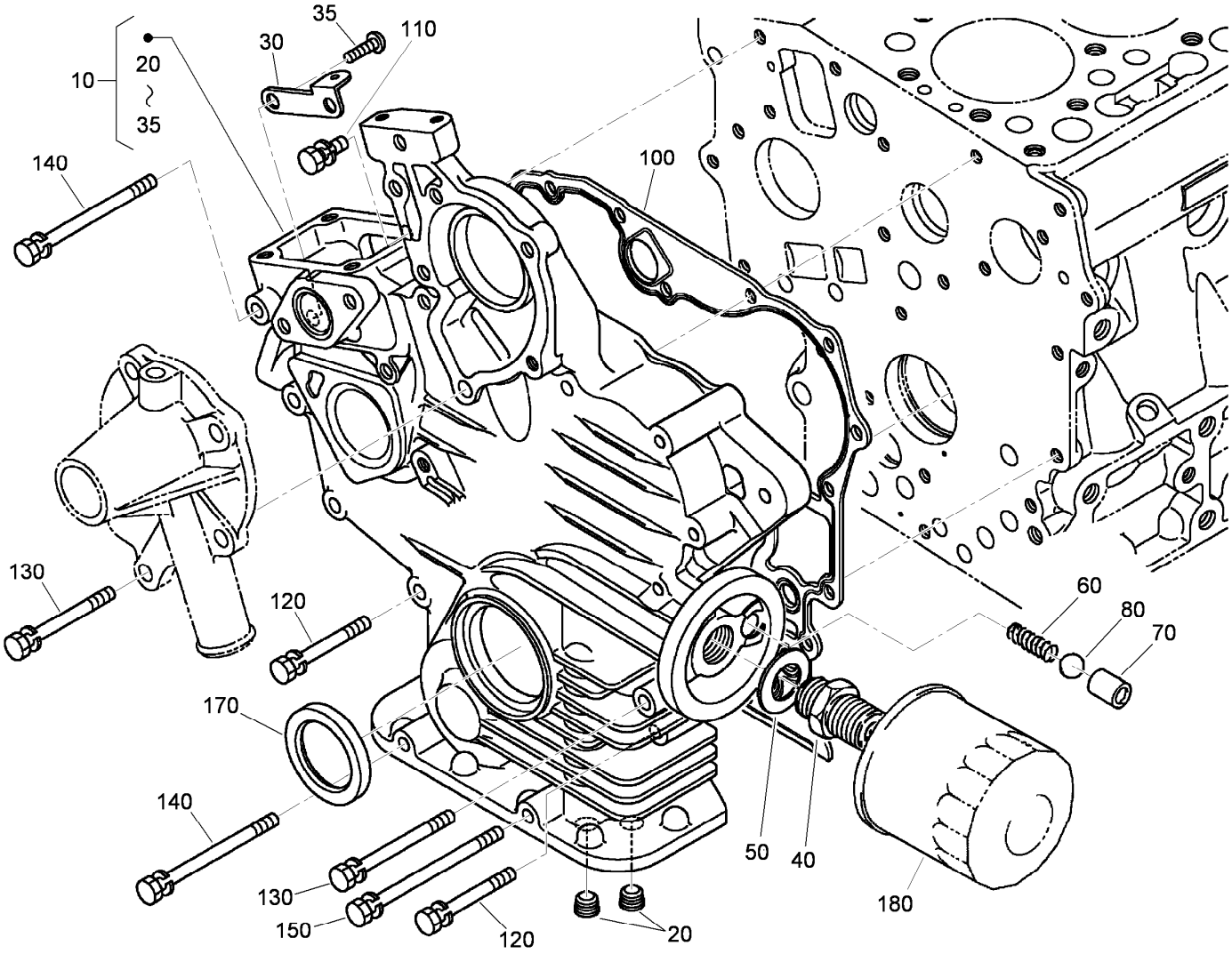

Gear Case Assembly

Ref.	Part Number	Qty.	Description
10	120-3138	1	Gear Case ASM
20	98-7488	2	Plug
30	110-3708	1	Stay-Spring, Start
35	100-2040	2	Screw
40	98-9388	1	Joint-Pipe
50	100-1926	1	Washer-Plain
60	100-2004	1	Spring
70	100-1894	1	Seat-Valve
80	100-1792	1	Ball

Ref.	Part Number	Qty.	Description
100	117-0327	1	Gasket-Case, Gear
110	98-7605	1	Bolt
120	105-3797	9	Bolt
130	100-1922	2	Bolt
140	98-9357	2	Bolt
150	110-3710	1	Bolt
170	100-1971	1	Seal-Oil
180	100-1892	1	Cartridge-Filter, Oil

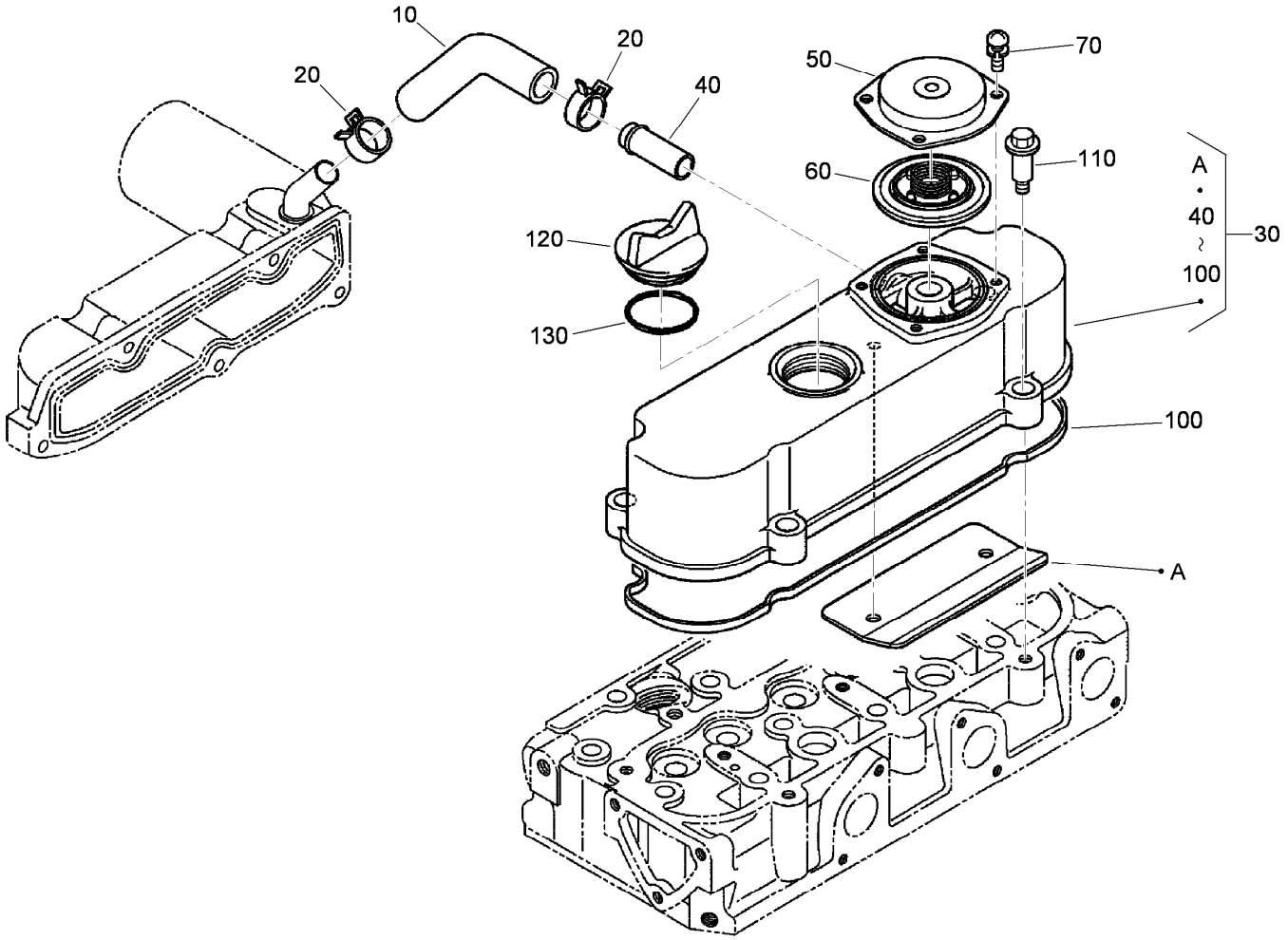

Cylinder Head Cover Assembly

Ref.	Part Number	Qty.	Description
10	120-3139	1	Tube-Breather
20	110-3712	2	Clamp-Hose
30	112-8332	1	Cylinder Head Cover ASM
40	98-9580	1	Pipe-Return, Water
50	110-3714	1	Cover-Breather
60	110-3715	1	Valve-Breather
70	98-9364	4	Screw (With Washer)
100	112-2521	1	Gasket-Cover, Head
110	108-7063	4	Bolt
120	107-9075	1	Plug-Filler, Oil
130	120-2560	1	O-Ring

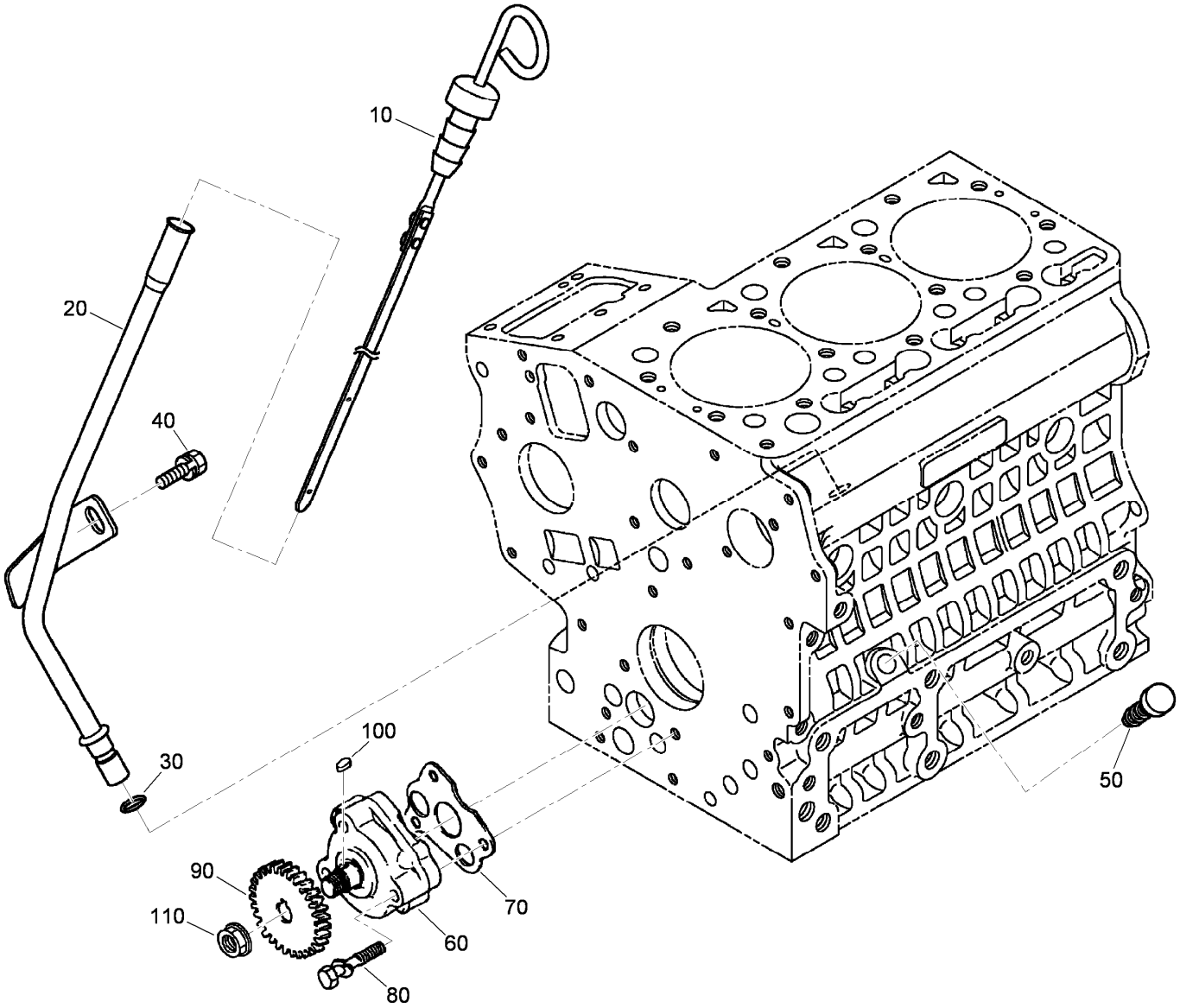

Dipstick and Guide Assembly

Ref.	*Part Number*	*Qty.*	*Description*
10	120-3124	1	Gauge-Oil
20	120-3125	1	Guide-Gauge, Oil
30	98-9722	1	O-Ring
40	115-8504	1	Bolt-Flange
50	110-3720	1	Plug-Gauge, Oil
60	100-2002	1	Oil Pump ASM
70	100-2003	1	Gasket-Pump, Oil
80	100-1923	3	Bolt
90	100-1893	1	Gear-Drive, Oil Pump
100	98-7658	1	Key-Feather
110	100-1779	1	Nut-Flange

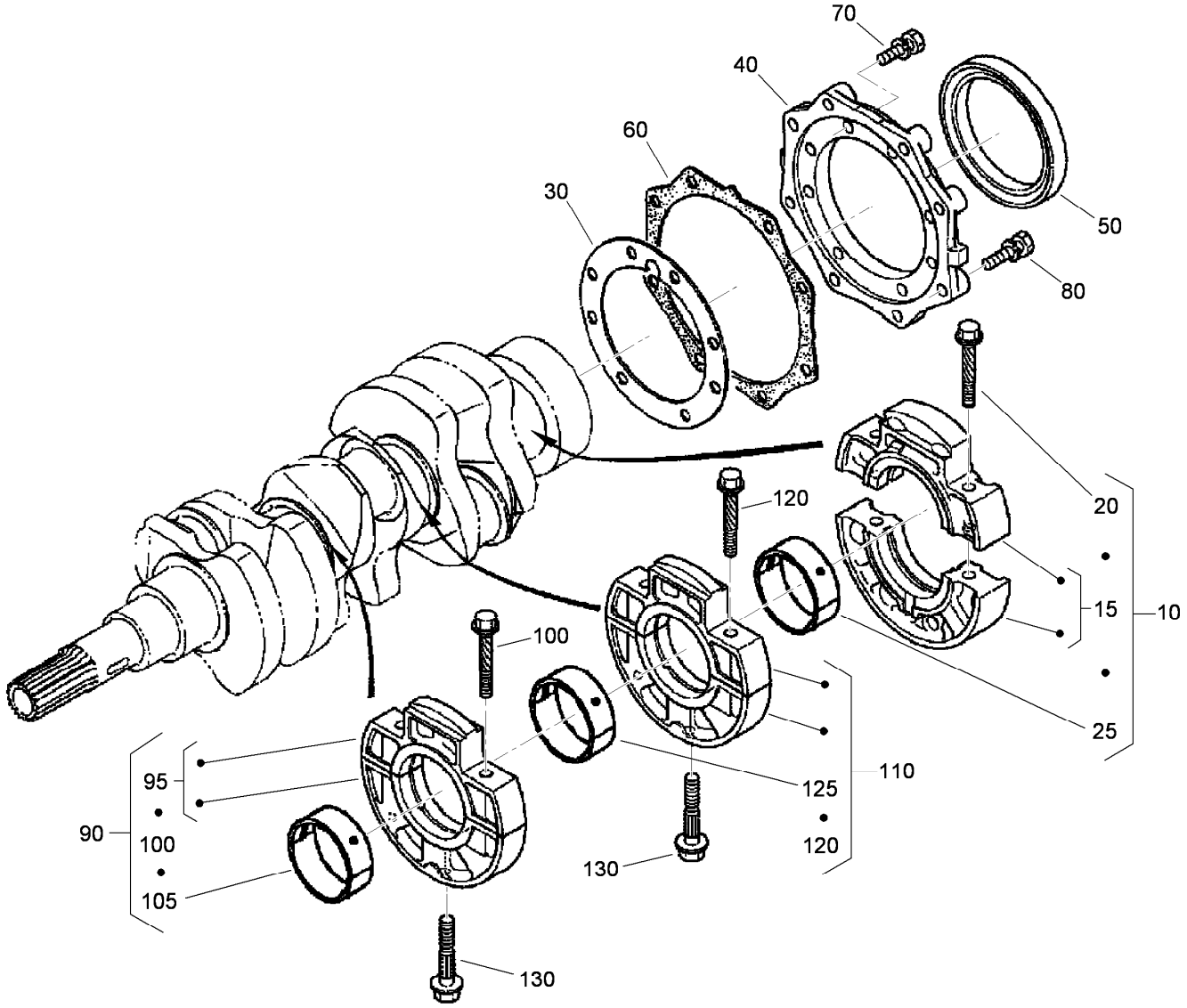

Main Bearing Case Assembly

Ref.	Part Number	Qty.	Description
10	112-2494	1	Wheel Case Bearing ASM
15	110-3722	1	Main Bearing Case ASM
20	110-3723	2	Bolt-Case, Bearing
25	110-3744	1	Crankshaft Metal ASM (STD)
30	100-1873	1	Gasket-Case, Bearing
40	112-8334	1	Cover-Case, Bearing
50	110-3724	1	Seal-Oil
60	100-1876	1	Gasket-Cover, Case
70	98-7568	8	Bolt
80	100-1750	8	Bolt

Ref.	Part Number	Qty.	Description
90	112-2495	1	Main Case Bearing ASM
95	110-3722	1	Main Bearing Case ASM
100	110-3723	2	Bolt-Case, Bearing
105	110-3741	1	Crankshaft Metal ASM (STD)
110	112-2496	1	Main Case Bearing ASM
120	110-3723	2	Bolt-Case, Bearing
125	110-3741	1	Crankshaft Metal ASM (STD)
130	100-1874	2	Bolt-Case, Bearing

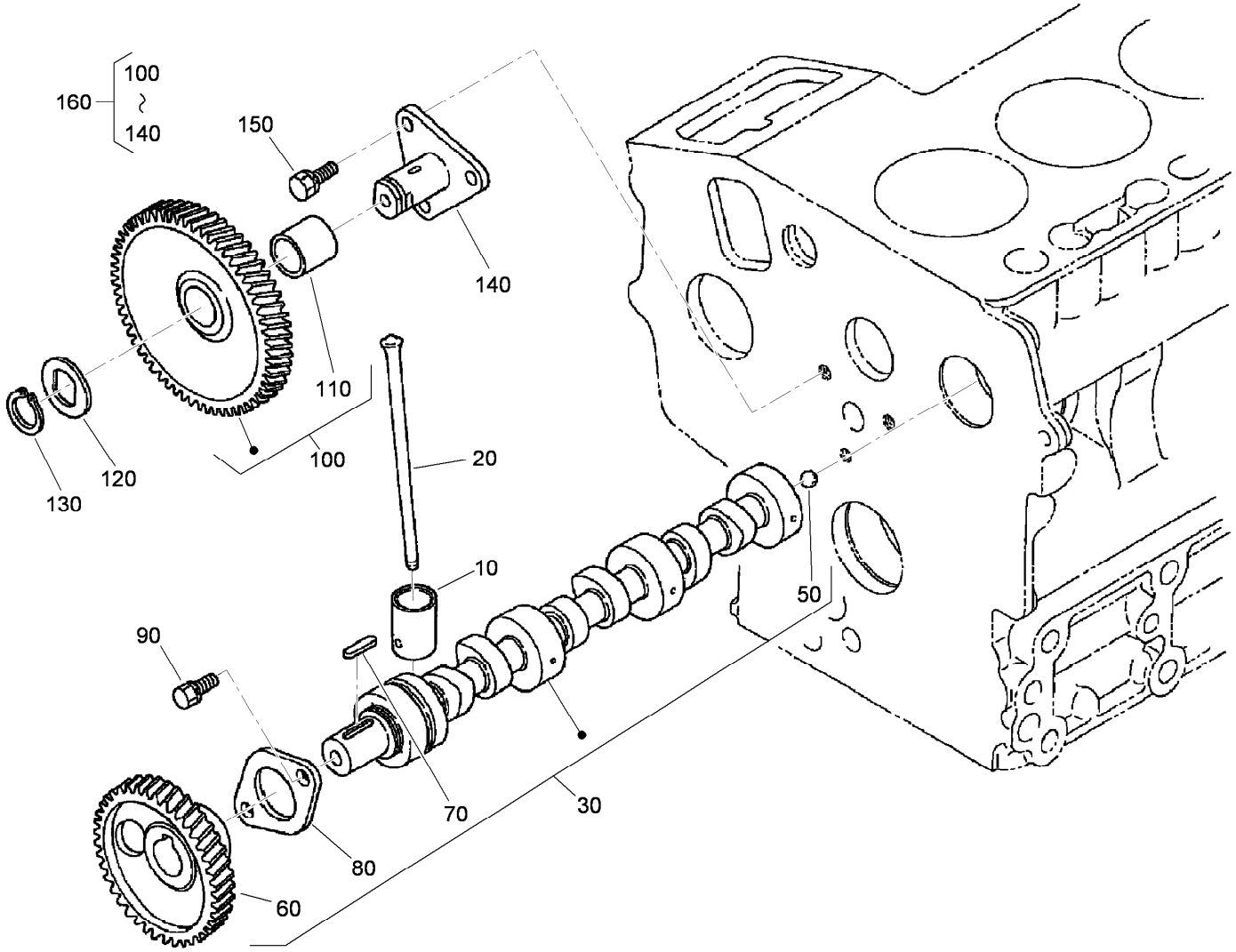

Cam Shaft and Idle Gear Shaft Assembly

Ref.	*Part Number*	*Qty.*	*Description*
10	110-3727	6	Tappet
20	100-1989	6	Rod-Push
30	120-3126	1	Camshaft ASM
50	110-3729	1	Ball
60	100-1889	1	Gear-Camshaft
70	98-9378	1	Key-Feather
80	100-1887	1	Stopper-Camshaft
90	98-9350	2	Bolt
100	100-1966	1	Gear-Idle
110	100-1968	1	Bushing
120	100-1970	1	Collar-Gear, Idle
130	100-1969	1	Ring-Snap
140	100-1967	1	Shaft-Gear, Idle
150	98-9351	3	Bolt
160	100-2240	1	Idle Gear ASM

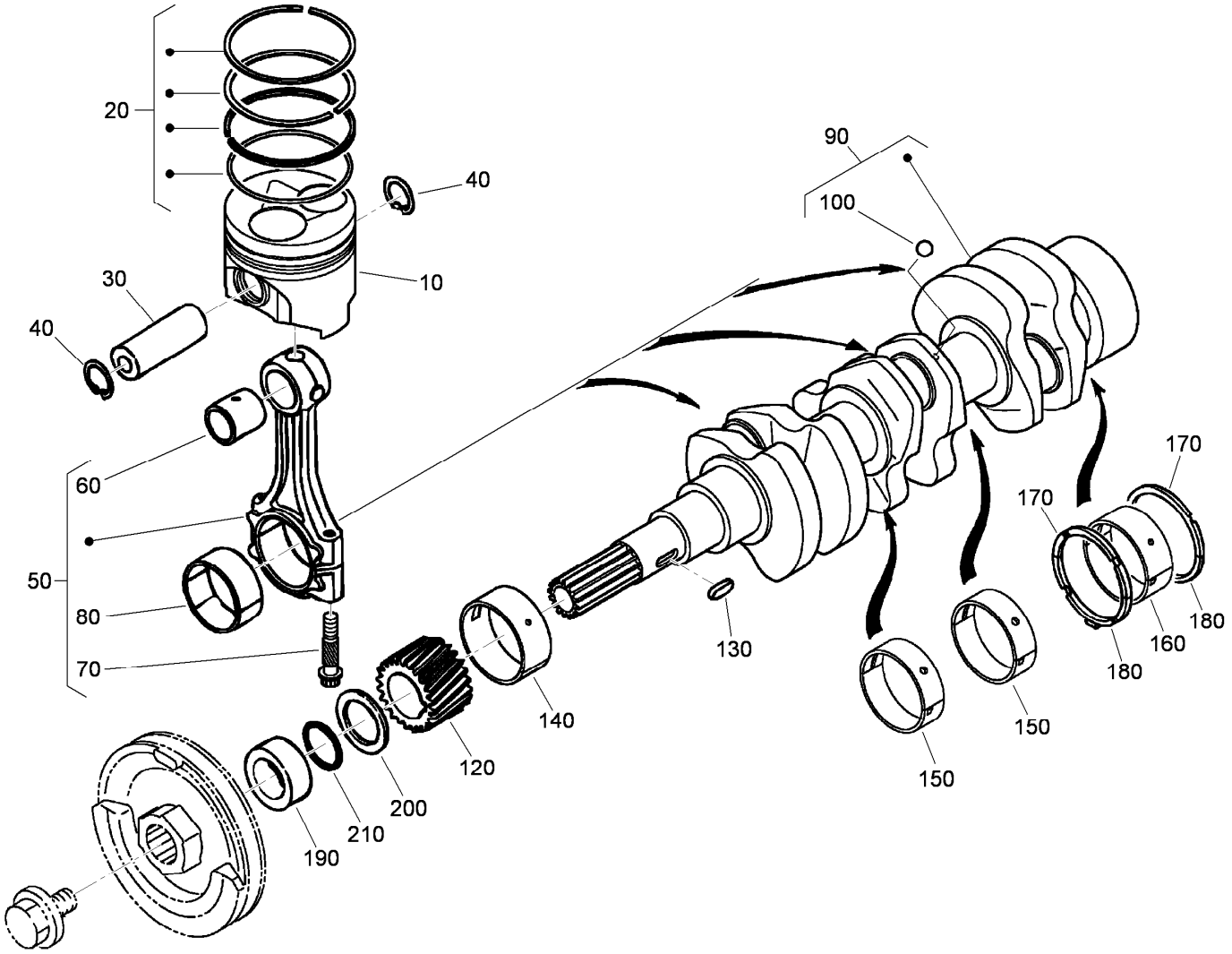

Piston and Crankshaft Assembly

Ref.	Part Number	Qty.	Description
10	117-8849	3	Piston STD
10	112-8399	3	Piston (+.25Mm)
20	110-3732	3	Piston Ring ASM (STD)
20	110-3733	3	Piston Ring ASM (+.25Mm)
30	110-3734	3	Pin-Piston
40	100-1835	6	Circlip-Internal
50	110-3735	3	Connecting Rod ASM
60	110-3736	3	Bushing-Pin, Piston
70	100-1999	6	Bolt-Rod, Connecting
80	100-2000	3	Metal-Crankpin (STD)
80	100-1942	3	Metal-Crankpin (-0.20Mm)
80	100-1943	3	Metal-Crankpin (-0.40Mm)
90	117-0308	1	Crankshaft
100	100-1791	3	Ball
120	100-1891	1	Gear-Crankshaft
130	100-1752	1	Key-Feather
140	110-3738	1	Metal-Crankshaft (STD)
140	110-3739	1	Metal-Crankshaft (-.0.20Mm)
140	110-3740	1	Metal-Crankshaft (-0.40Mm)

Ref.	Part Number	Qty.	Description
150	110-3741	2	Crankshaft Metal ASM (STD)
150	110-3742	2	Crankshaft Metal ASM (-0.20Mm)
150	110-3743	2	Crankshaft Metal ASM (-0.40Mm)
160	110-3744	1	Crankshaft Metal ASM (STD)
160	110-3745	1	Crankshaft Metal ASM (-0.20Mm)
160	110-3746	1	Crankshaft Metal ASM (-0.40Mm)
170	100-1836	2	Metal-Side (STD)
170	100-1838	2	Metal-Side (+0.20Mm)
170	100-1839	2	Metal-Side (+0.40Mm)
180	117-0309	2	Metal-Side (STD)
180	117-0310	2	Metal-Side (+0.20Mm)
180	117-0311	2	Metal-Side (+0.40Mm)
190	100-1890	1	Collar-Crankshaft
200	100-1974	1	Slinger-Oil
210	100-2209	1	O-Ring

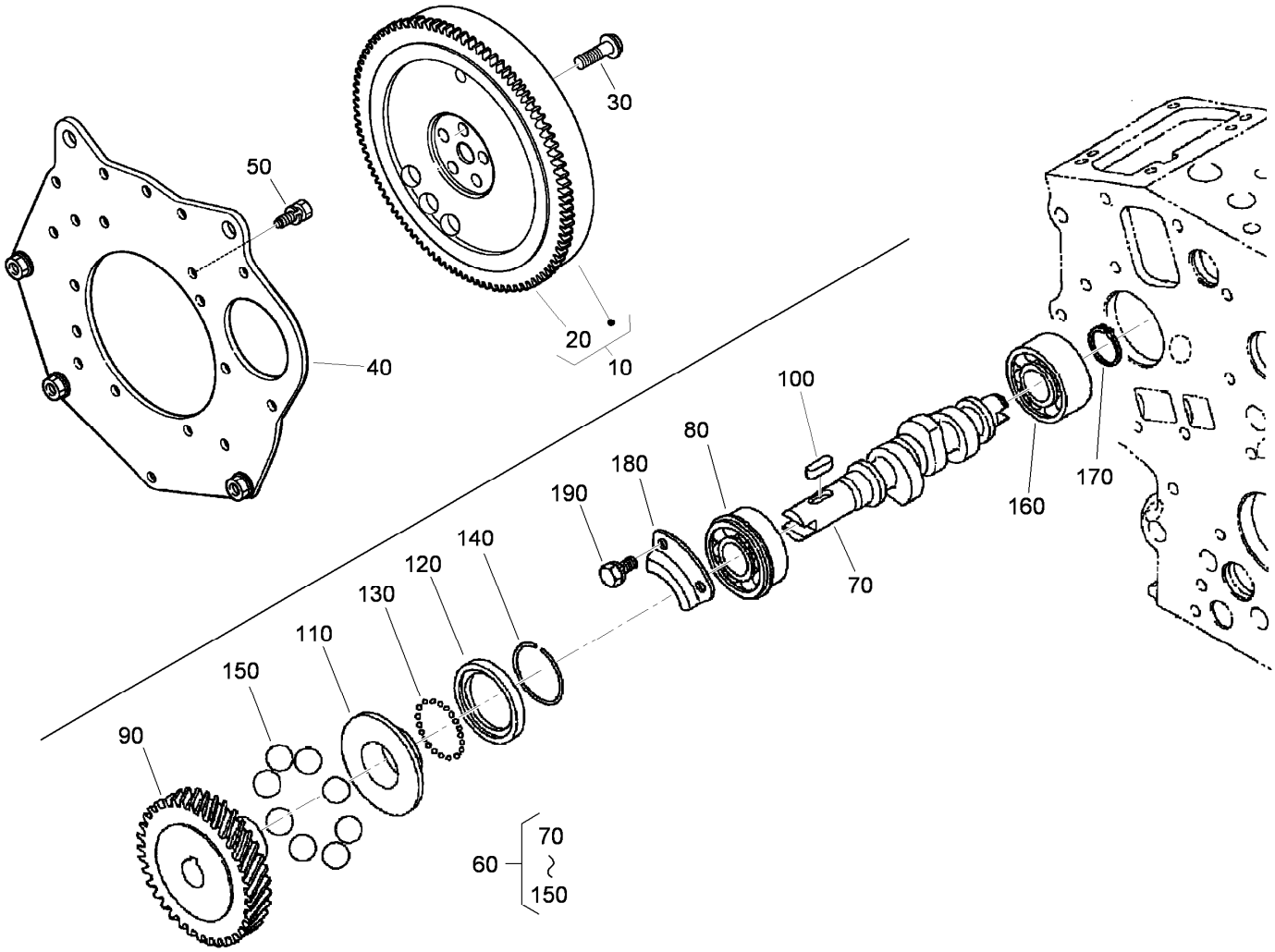

Flywheel and Fuel Camshaft Assembly

Ref.	Part Number	Qty.	Description
10	120-3128	1	Flywheel ASM
20	120-3129	1	Ring-Gear
30	100-1930	5	Bolt-Flywheel
40	120-3130	1	Plate-End, Rear
50	110-3754	10	Bolt
60	112-8335	1	Fuel Camshaft ASM
70	112-2818	1	Camshaft-Fuel
80	100-1795	1	Bearing-Ball
90	100-2006	1	Gear-Pump, Injection
100	100-1752	1	Key-Feather

Ref.	Part Number	Qty.	Description
110	112-8336	1	Sleeve-Governor
120	100-1904	1	Case-Ball, Governor
130	100-1790	32	Ball
140	100-1843	1	Circ-Clip
150	100-1793	8	Ball
160	110-3757	1	Bearing-Ball
170	100-1784	1	Circ-Clip, External
180	100-1888	1	Stopper-Fuel, Camshaft
190	98-9350	2	Bolt

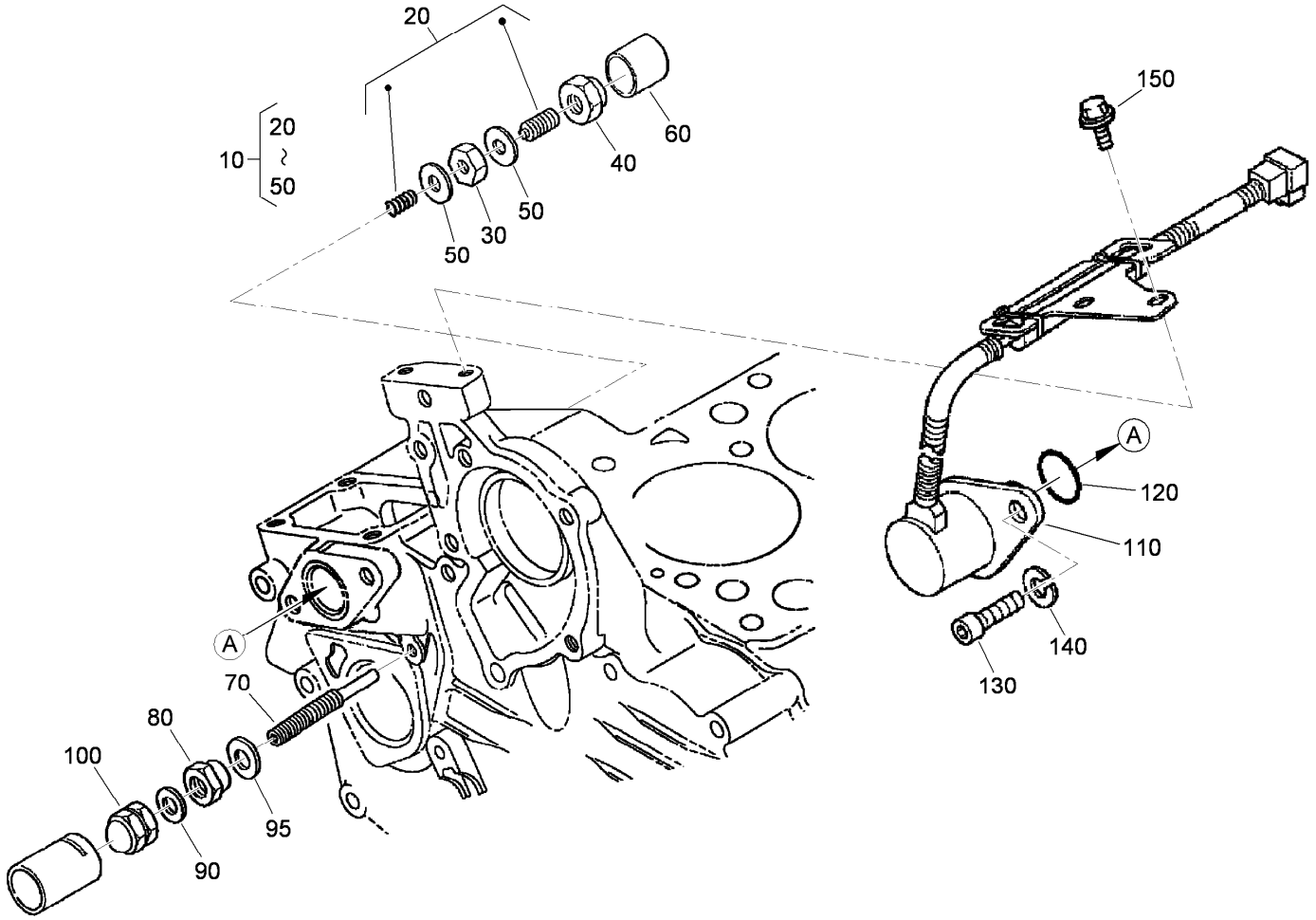

Idle Apparatus and Stop Solenoid Assembly

Ref.	Part Number	Qty.	Description
10	100-1898	1	Idle Apparatus ASM
20	100-1899	1	Adjusting Bolt ASM
30	100-1846	1	Nut
40	100-1901	1	Nut-Cap
50	98-7428	2	Gasket
60	100-1902	1	Cap
70	110-3758	1	Bolt-Adjusting
80	100-2175	1	Nut-Lock

Ref.	Part Number	Qty.	Description
90	98-7654	1	Gasket
95	107-9081	1	Gasket
100	99-8387	1	Nut-Cap
110	117-2719	1	Solenoid Stop ASM
120	110-3762	1	O-Ring
130	110-3763	2	Bolt-HSH
140	98-7699	2	Washer-Spring
150	100-1774	2	Bolt-Flange

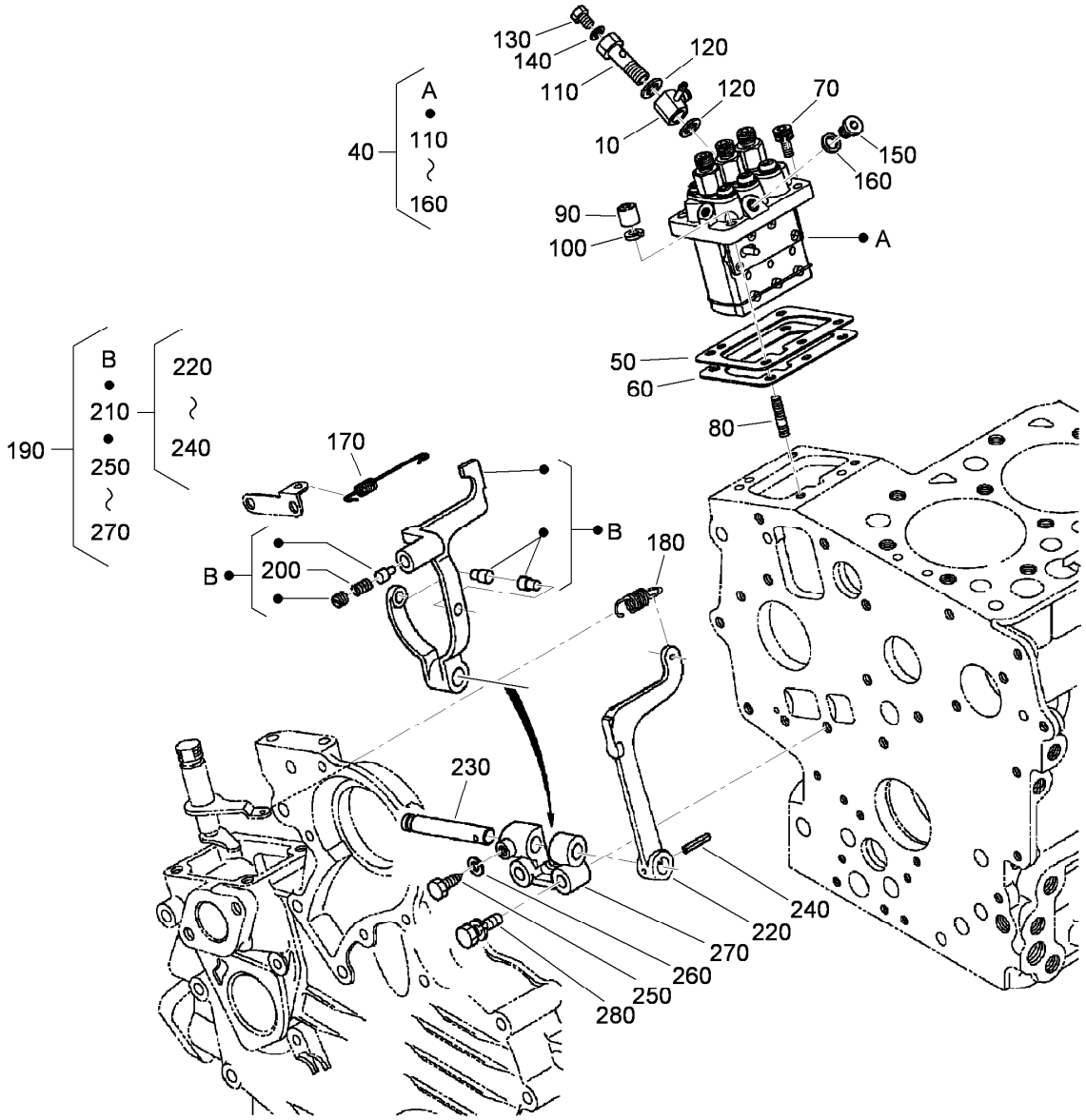

Injection Pump and Governor Assembly

Ref.	Part Number	Qty.	Description
10	110-3764	1	Joint
40	110-3765	1	Injection Pump ASM
50	115-3045	1	Shim-Injection (0.175Mm)
50	98-9456	1	Shim-Injection (0.20Mm)
50	98-9457	1	Shim-Injection (0.25Mm)
60	98-9458	1	Shim-Injection (0.30Mm)
60	115-3046	1	Shim-Injection (0.35Mm)
70	98-9361	2	Bolt-HSH
80	98-9438	2	Stud
90	98-9440	2	Nut-Cap
100	98-7699	4	Washer-Spring
110	100-1896	1	Screw-Hollow
120	98-9445	2	Gasket
130	98-9430	1	Screw
140	98-9446	1	Gasket

Ref.	Part Number	Qty.	Description
150	98-9466	1	Plug
160	98-9451	1	Gasket
170	110-3766	1	Spring-Start
180	110-3767	1	Spring-Governor
190	120-3131	1	Fork Lever ASM
200	120-3132	1	Spring
210	100-1905	1	Fork Lever ASM
220	100-1907	1	Lever-Fork
230	100-1908	1	Shaft-Lever, Fork
240	100-1751	1	Pin-Spring
250	100-1845	1	Bolt
260	100-2204	1	*obs* Washer-Spring
270	100-1909	1	Holder-Lever, Fork
280	100-1763	2	Bolt

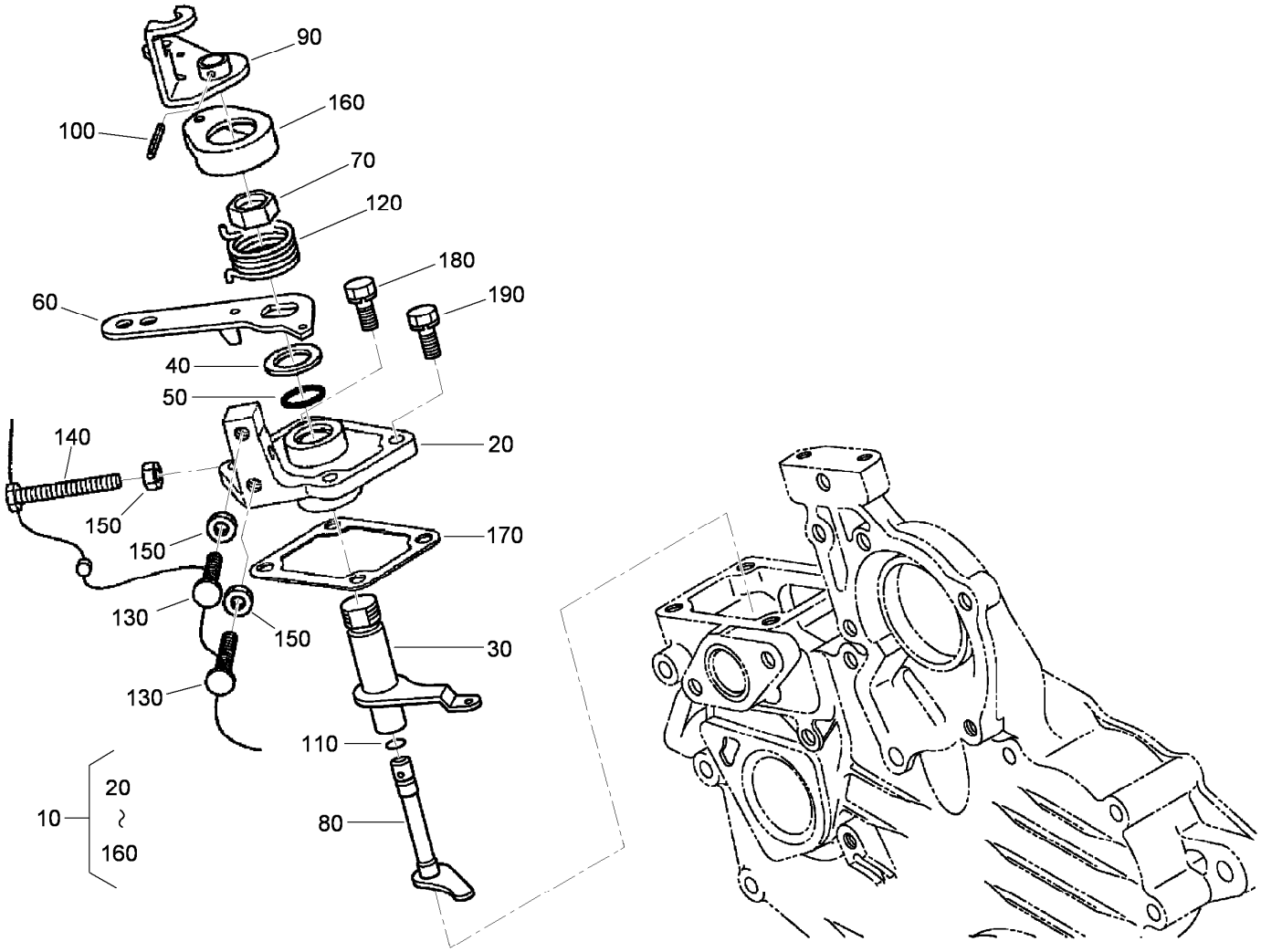

Speed Control Plate Assembly

Ref.	Part Number	Qty.	Description
10	110-3769	1	Speed Control Plate ASM
20	110-3770	1	Plate-Control, Speed
30	110-3771	1	Lever-Governor
40	110-3772	1	Collar
50	100-2208	1	O-Ring
60	110-3773	1	Lever-Control, Speed
70	110-3774	1	Nut-Control, Speed
80	110-3775	1	Shaft-Lever
90	110-3776	1	Lever-Stop, Engine
100	110-3777	1	Pin-Spring

Ref.	Part Number	Qty.	Description
110	100-2207	1	O-Ring
120	110-3778	1	Spring-Return
130	120-3133	2	Screw-Stopper
140	120-3134	1	Bolt
150	98-7572	3	Nut
160	110-3779	1	Cap
170	100-1962	1	Gasket-Plate, Control
180	98-7605	2	Bolt
190	112-2507	2	Bolt

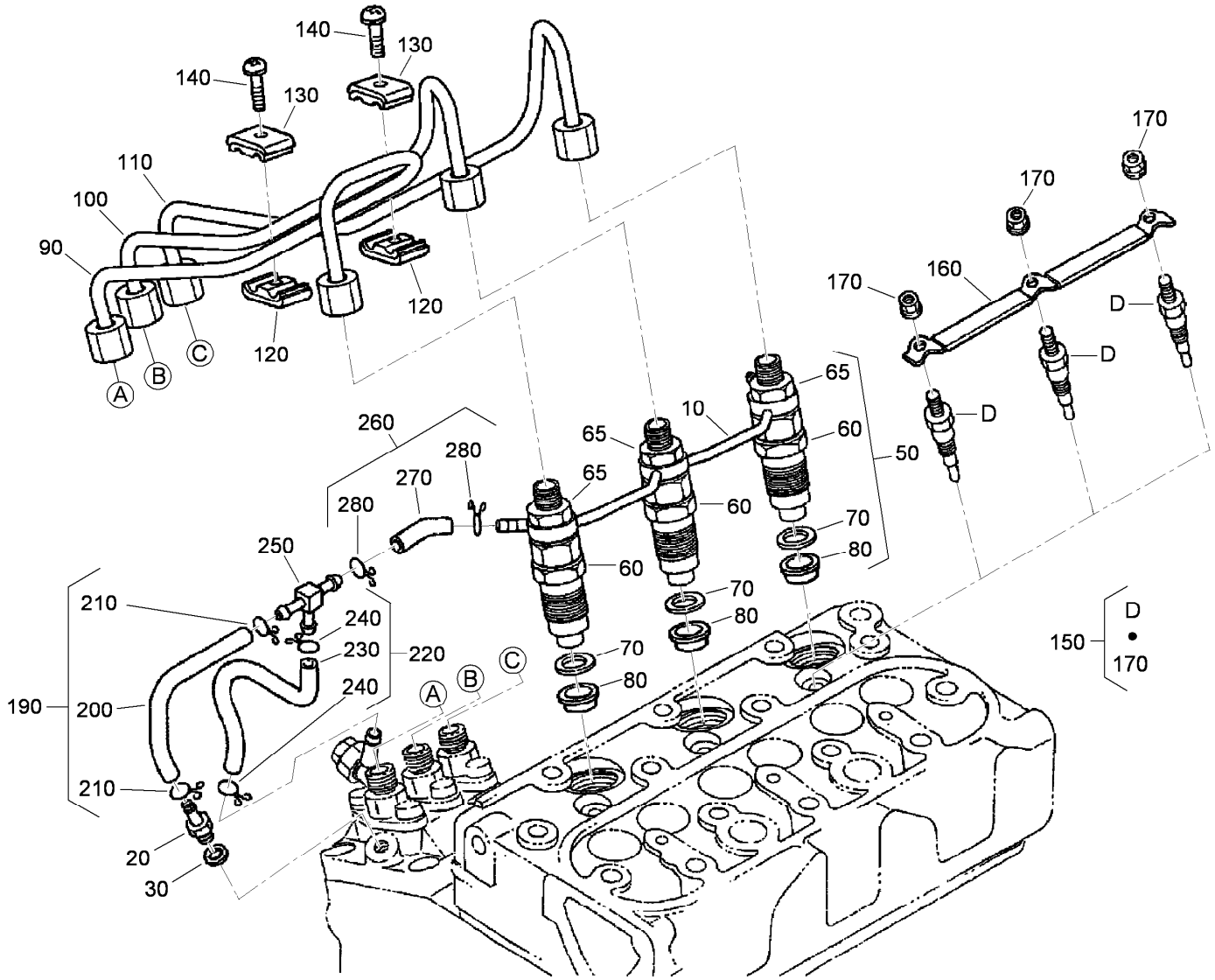

Nozzle Holder and Glow Plug Assembly

Ref.	Part Number	Qty.	Description
10	110-3780	1	Over Flow Pipe ASM
20	98-9431	1	Screw-Bleeder, Air
30	98-7654	1	Gasket
50	100-1982	3	Nozzle Holder Kit
60	100-1758	3	Nozzle Holder ASM
65	98-7613	3	Nut
70	98-7676	3	Gasket
80	98-7677	3	Seal-Heat
90	110-3781	1	Pipe-Injection
100	110-3782	1	Pipe-Injection
110	110-3783	1	Pipe-Injection
120	98-7682	2	Clamp-Pipe
130	98-7683	2	Clamp-Pipe
140	98-7684	2	Screw (W/Washer)

Ref.	Part Number	Qty.	Description
150	100-1854	3	Plug-Glow
160	110-3784	1	Cord-Plug, Glow
170	99-8377	3	Nut-Flange
190	110-3785	1	Fuel Tube ASM
200	110-3786	1	Tube-Fuel
210	98-7671	2	Clip-Pipe
220	110-3787	1	Fuel Tube ASM
230	110-3788	1	Tube-Fuel
240	98-7671	2	Clip-Pipe
250	112-8338	1	Pipe-Joint, T
260	110-3790	1	Fuel Tube ASM
270	110-3791	1	Tube-Fuel
280	98-7671	2	Clip-Pipe

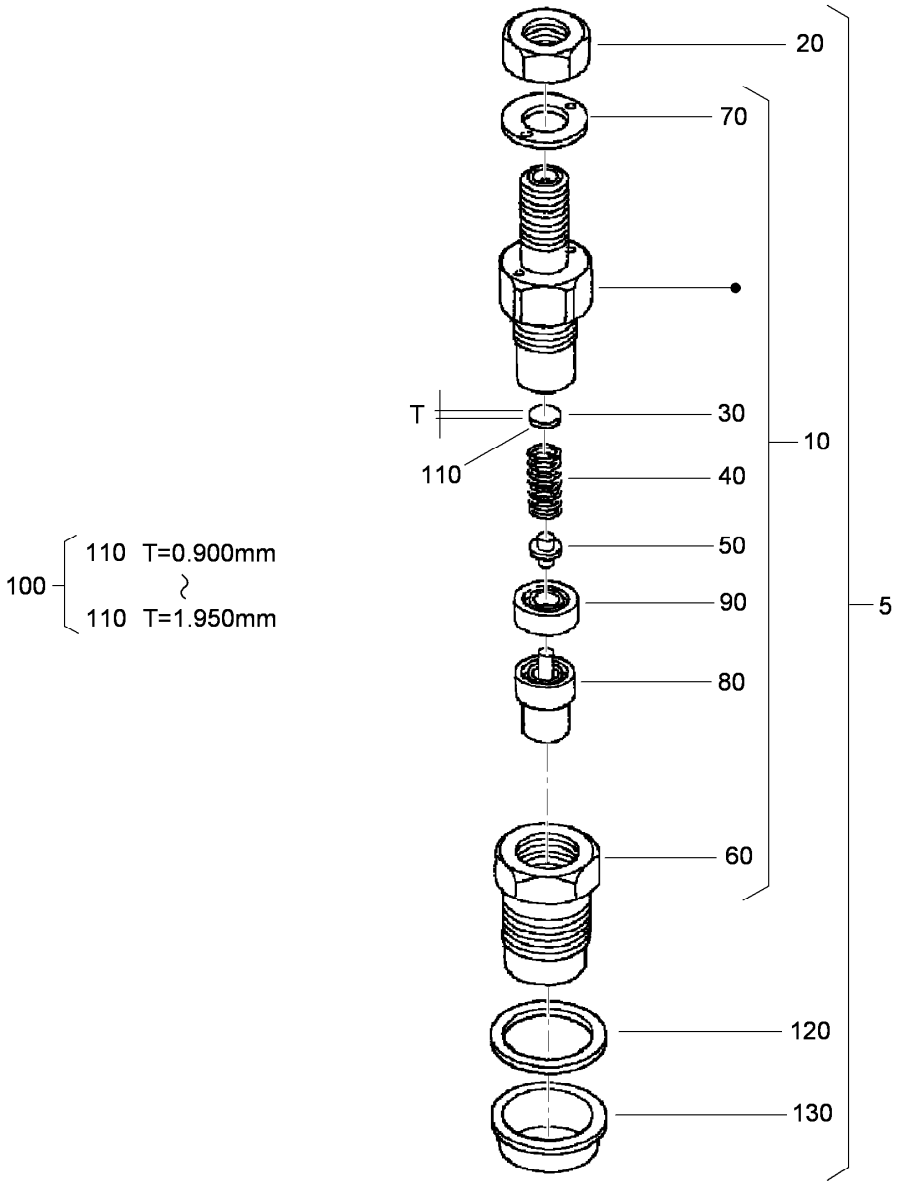

Nozzle Holder Component Assembly

Ref.	Part Number	Qty.	Description
5	100-1982	3	Nozzle Holder Kit
10	100-1758	3	Nozzle Holder ASM
20	98-7613	3	Nut
30	98-7642	3	Washer-Adjusting (0.900Mm)
40	98-7647	3	Spring-Nozzle
50	98-7666	3	Rod-Push
60	100-2242	3	Nut-Nozzle
70	98-7668	3	Washer
80	100-2009	3	Piece-Nozzle
90	98-7665	3	Spacer-Distance
100	98-9448	3	Adjusting Washer ASM
110	98-7642	3	Washer-Adjusting (0.900Mm)
110	98-7842	3	Washer-Adjusting (0.950Mm)
110	98-7841	3	Washer-Adjusting (0.925Mm)
110	98-7843	3	Washer-Adjusting (0.975Mm)

Ref.	Part Number	Qty.	Description
110	98-7844	3	Washer-Adjusting (1.000Mm)
110	98-7845	3	Washer-Adjusting (1.025Mm)
110	98-7846	3	Washer-Adjusting (1.050Mm)
110	98-7847	3	Washer-Adjusting (1.075Mm)
110	98-7848	3	Washer-Adjusting (1.100Mm)
110	98-7849	3	Washer-Adjusting (1.125Mm)
110	98-7850	3	Washer-Adjusting (1.150Mm)
110	98-7851	3	Washer-Adjusting (1.175Mm)
110	98-7852	3	Washer-Adjusting (1.200Mm)
110	98-7853	3	Washer-Adjusting (1.225Mm)

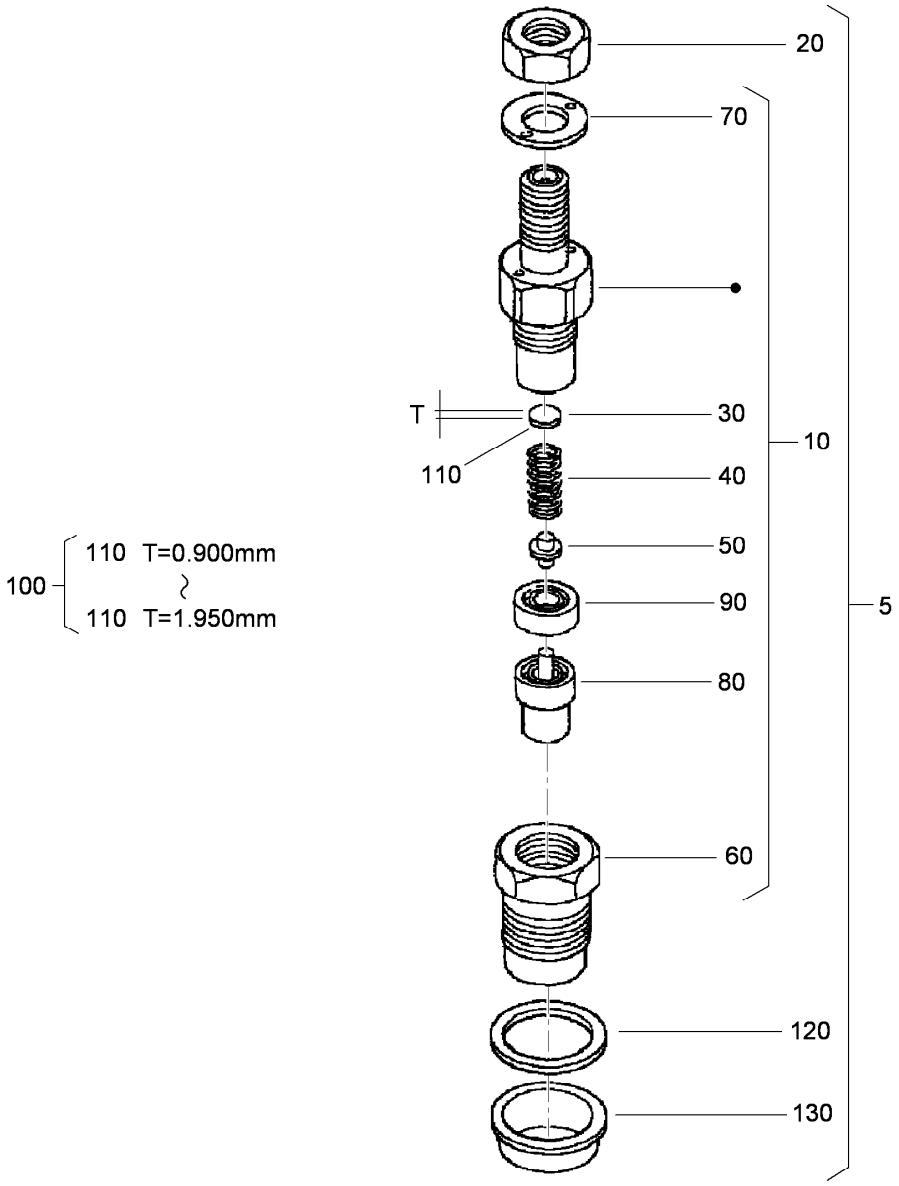

Nozzle Holder Component Assembly (continued)

Ref.	Part Number	Qty.	Description
110	98-7854	3	Washer-Adjusting (1.250Mm)
110	98-7855	3	Washer-Adjusting (1.275Mm)
110	98-7856	3	Washer-Adjusting 1.300Mm)
110	98-7857	3	Washer-Adjusting (1.325Mm)
110	98-7858	3	Washer-Adjusting (1.350Mm)
110	98-7859	3	Washer-Adjusting (1.375Mm)
110	98-7860	3	Washer-Adjusting (1.400Mm)
110	98-7861	3	Washer-Adjusting (1.425Mm)
110	98-7862	3	Washer-Adjusting (1.450Mm)
110	98-7863	3	Washer-Adjusting (1.475Mm)

Ref.	Part Number	Qty.	Description
110	98-7864	3	Washer-Adjusting (1.500Mm)
110	98-7865	3	Washer-Adjusting (1.525Mm)
110	98-7866	3	Washer-Adjusting (1.550Mm)
110	98-7867	3	Washer-Adjusting (1.575Mm)
110	98-7868	3	Washer-Adjusting (1.600Mm)
110	98-7869	3	Washer-Adjusting (1.625Mm)
110	98-7870	3	Washer-Adjusting (1.650Mm)
110	98-7871	3	Washer-Adjusting (1.675Mm)
110	98-7872	3	Washer-Adjusting (1.700Mm)
110	98-7873	3	Washer-Adjusting (1.725Mm)

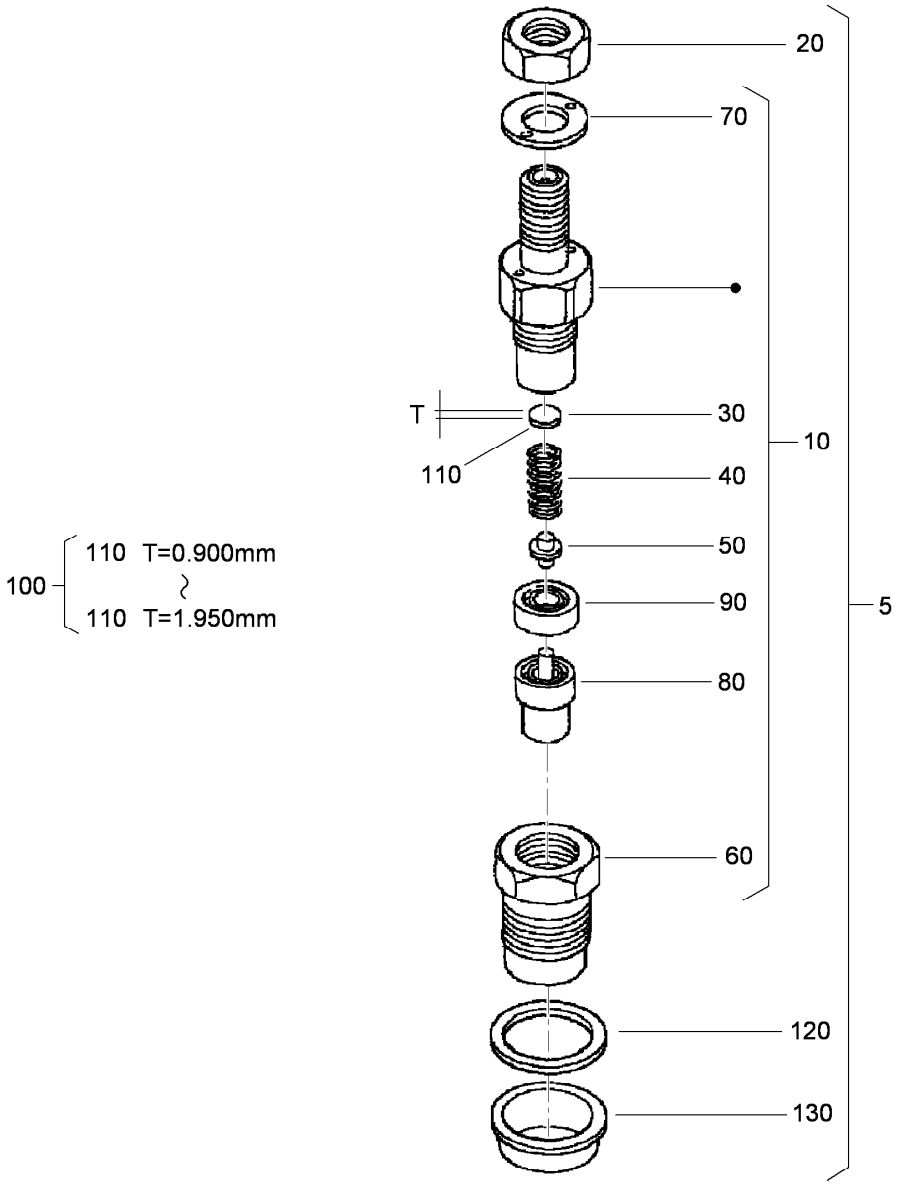

Nozzle Holder Component Assembly (continued)

Ref.	Part Number	Qty.	Description
110	98-7874	3	Washer-Adjusting (1.750Mm)
110	98-7875	3	Washer-Adjusting (1.775Mm)
110	98-7876	3	Washer-Adjusting (1.800Mm)
110	98-7877	3	Washer-Adjusting (1.825Mm)
110	98-7878	3	Washer-Adjusting (1.850Mm)

Ref.	Part Number	Qty.	Description
110	98-7879	3	Washer-Adjusting (1.875Mm)
110	98-7880	3	Washer-Adjusting (1.900Mm)
110	98-7881	3	Washer-Adjusting (1.925Mm)
110	98-7882	3	Washer-Adjusting (1.950Mm)
120	98-7676	3	Gasket
130	98-7677	3	Seal-Heat

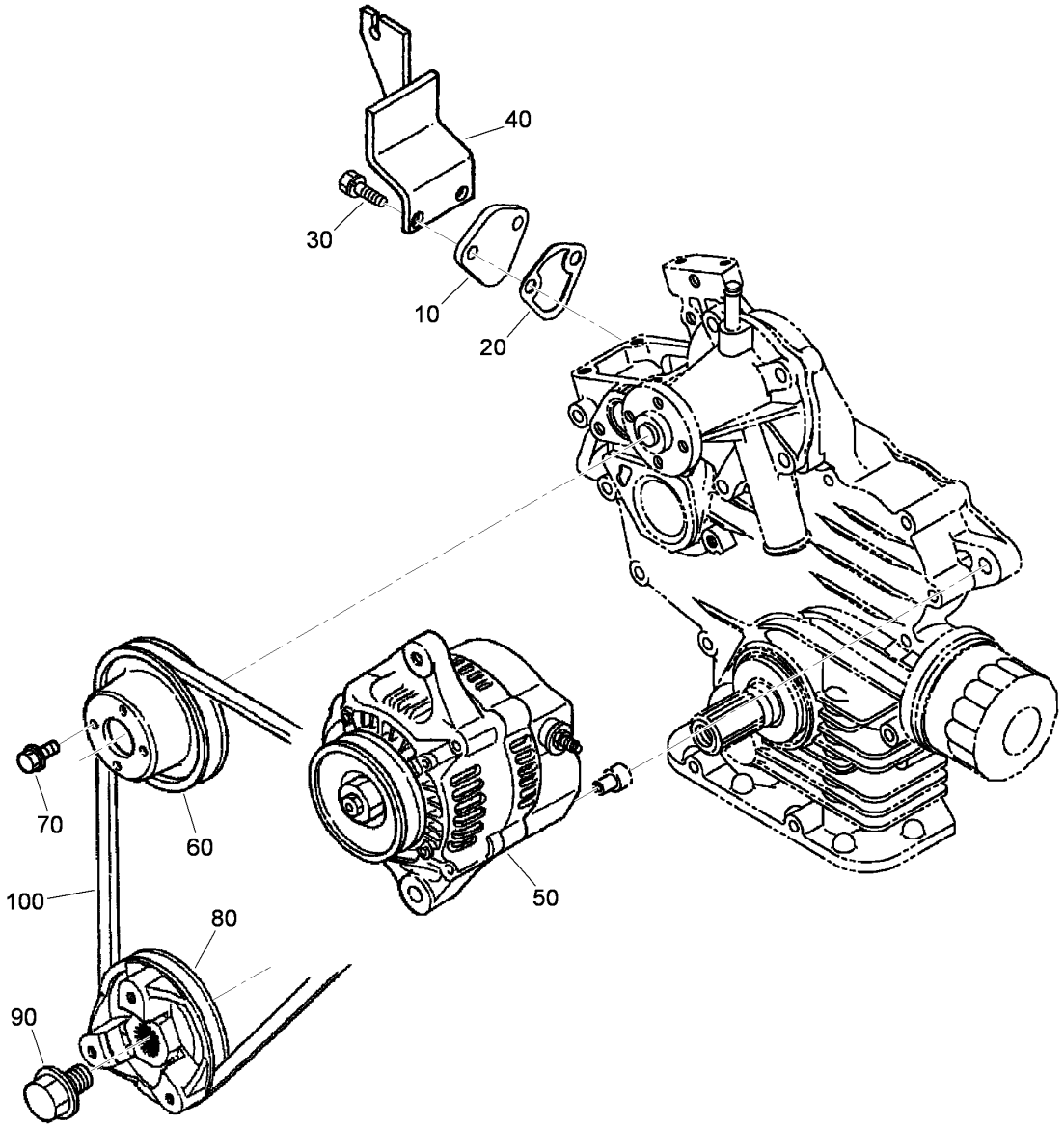

Alternator and Pulley and Fuel Pump Cover Assembly

Ref.	*Part Number*	*Qty.*	*Description*
10	99-3514	1	Cover
20	98-9636	1	Gasket-Pump, Fuel
30	98-7605	2	Bolt
40	120-3135	1	Clamp-Wire
50	117-5541	1	60 Amp Alternator ASM
60	100-1921	1	Pulley-Fan
70	99-8363	4	Bolt-Flange
80	112-2510	1	Pulley-Drive, Fan
90	100-1978	1	Bolt
100	119-4486	1	Belt-V, Fan

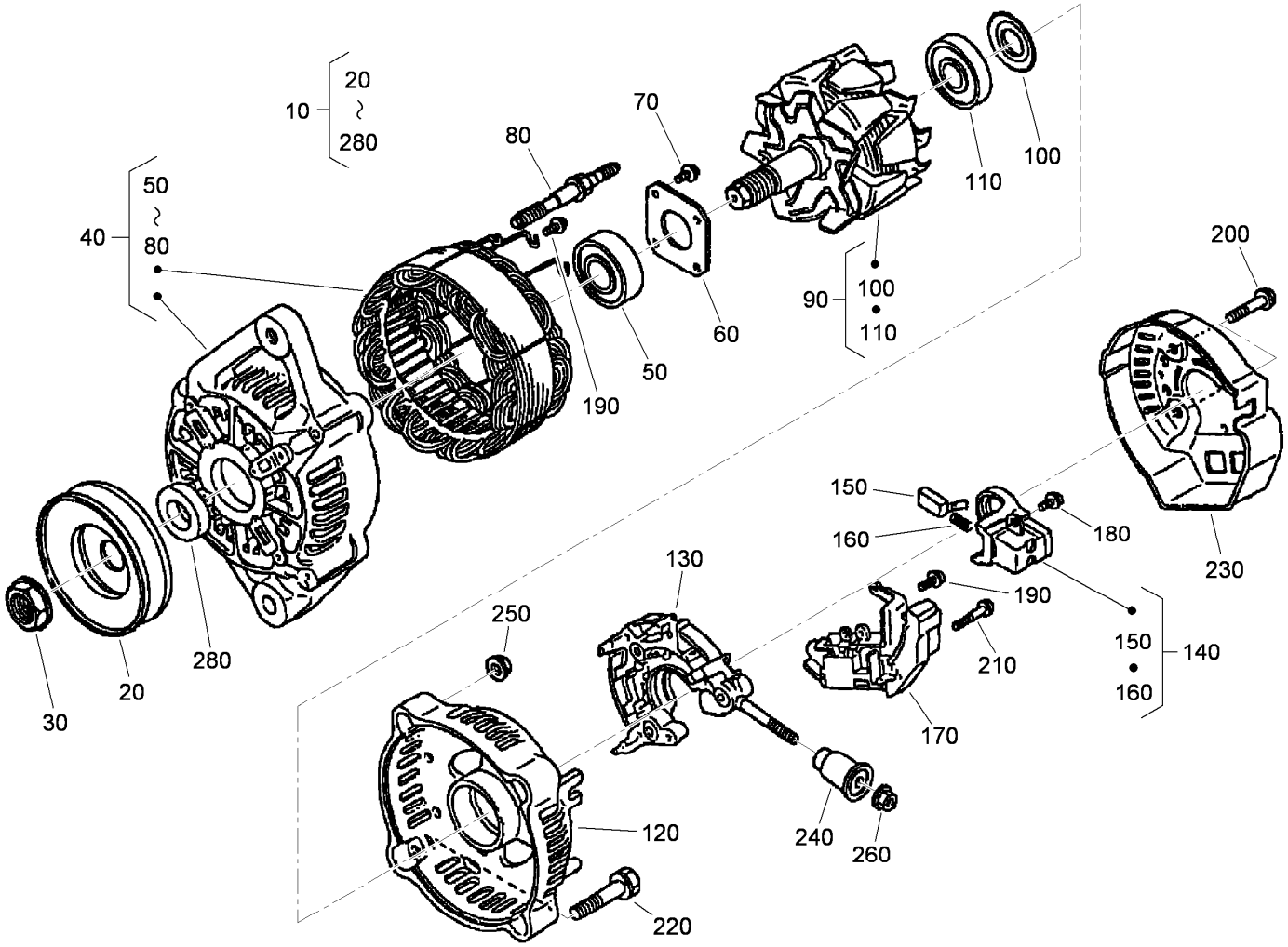

Alternator Components

Ref.	Part Number	Qty.	Description
10	117-5541	1	60 Amp Alternator ASM
20	98-9453	1	Pulley-Dynamo
30	98-7708	1	Nut
40	117-0316	1	Drive End Frame ASM
50	107-0137	1	Bearing-Ball
60	98-7715	1	Plate-Retainer
70	98-7716	4	Screw-Head, Round
80	98-7717	2	Bolt-Through
90	117-0317	1	Rotor ASM
100	98-7711	1	Cover-Bearing
110	107-0138	1	Bearing-Ball
120	117-0318	1	Frame-End
130	117-0322	1	Holder
140	107-0141	1	Brush Holder ASM

Ref.	Part Number	Qty.	Description
150	98-7724	2	Brush
160	98-7725	2	Spring-Brush
170	117-0319	1	Regulator ASM
180	98-7727	1	Screw-Head, Round
190	98-7728	6	Screw-Head, Round
200	98-7729	3	Bolt
210	98-7726	2	Screw-Head, Round
220	98-7731	2	Bolt
230	117-0320	1	Cover-End
240	117-0321	1	Insulation-Brush
250	98-7730	2	Nut
260	98-7732	1	Nut
280	98-7709	1	Collar

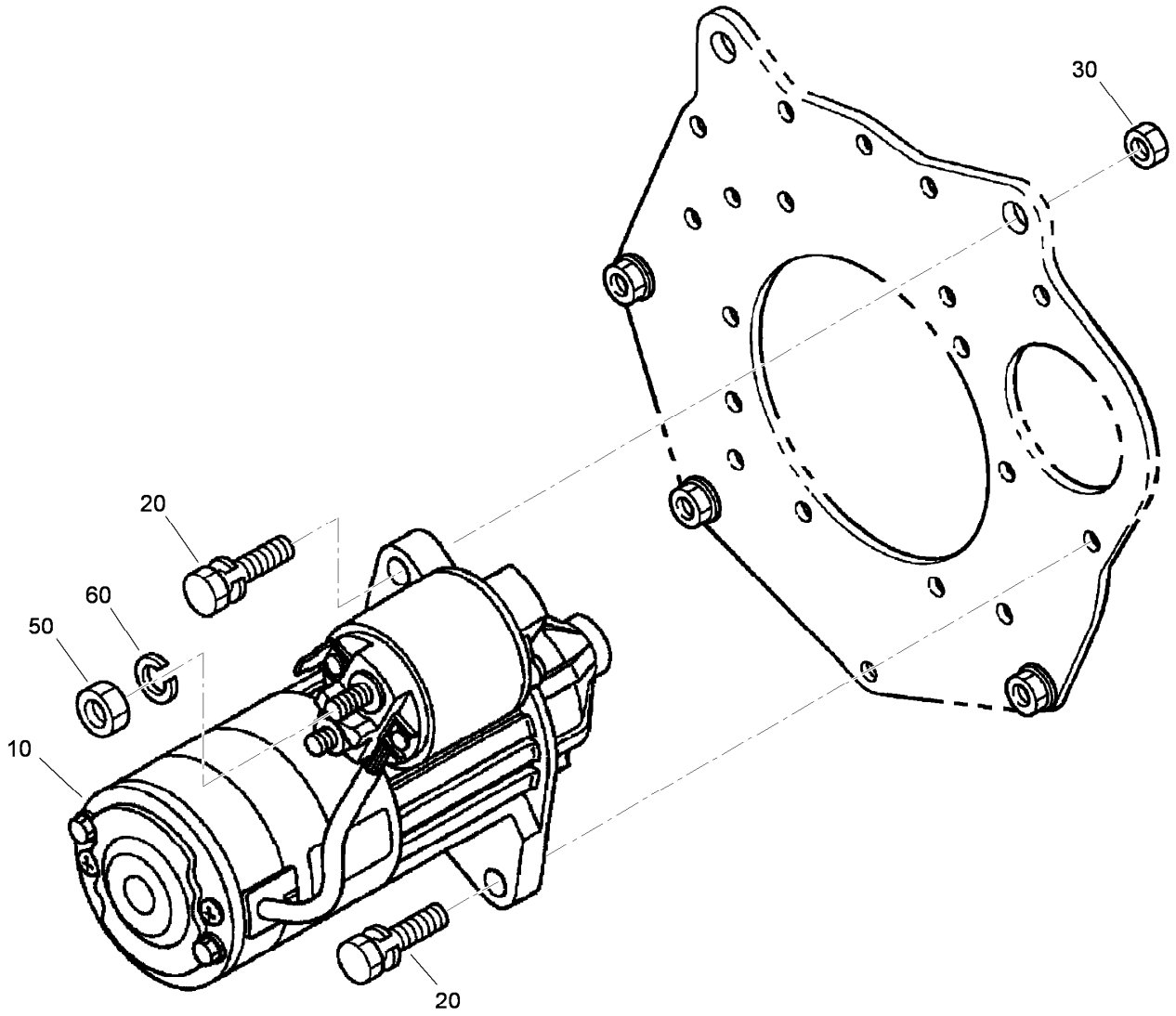

Starter Installation Assembly

Ref.	*Part Number*	*Qty.*	*Description*
10	110-3800	1	Starter ASM
20	98-7697	2	Bolt
30	98-7534	2	Nut
50	98-7534	1	Nut
60	105-2893	1	Washer-Spring

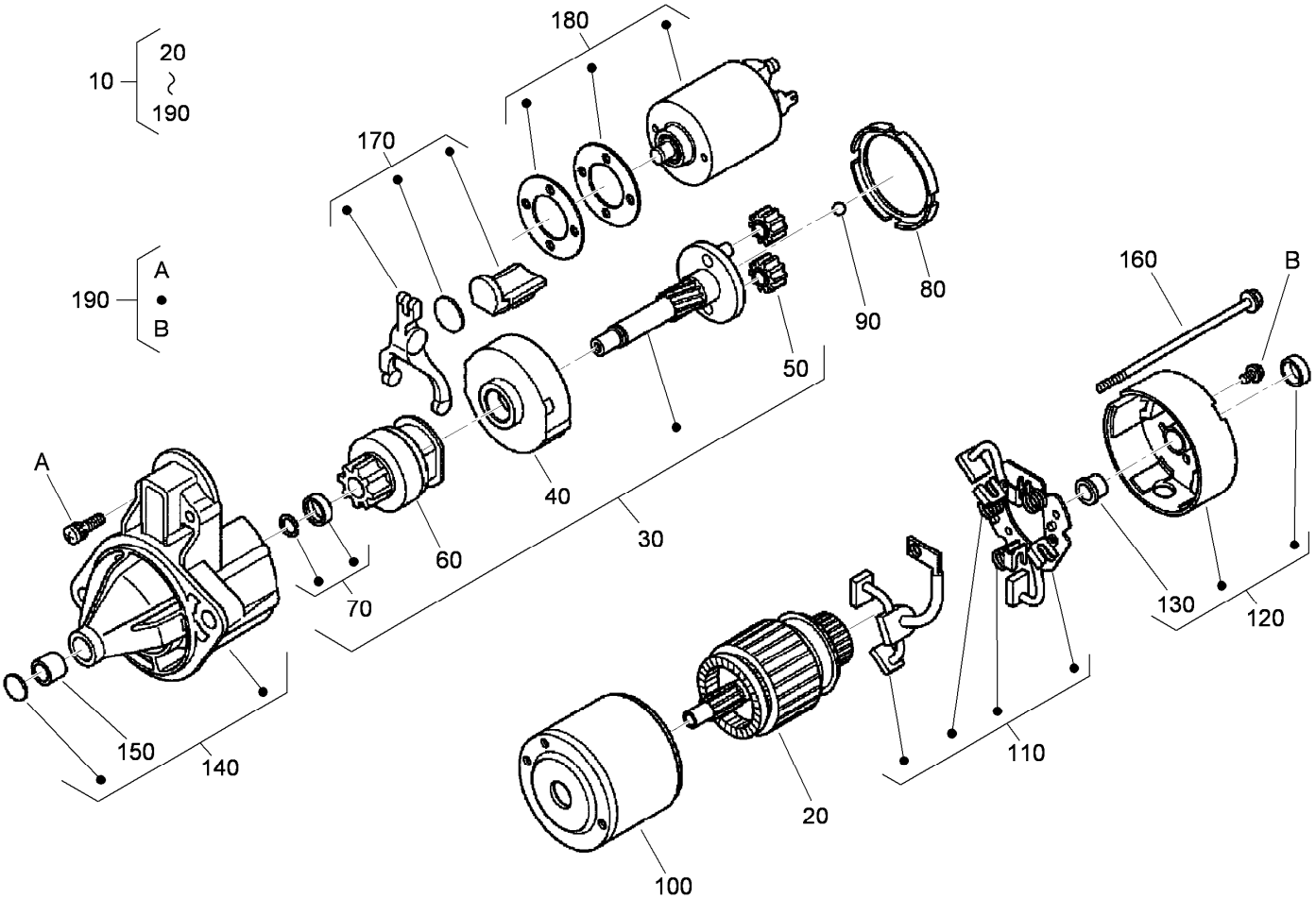

Starter Assembly No. 110-3800

Ref.	Part Number	Qty.	Description
10	110-3800	1	Starter ASM
20	110-3801	1	Armature
30	110-3802	1	Shaft ASM
40	120-3142	1	Gear-Internal
50	110-3804	3	Gear-Planetary
60	110-3805	1	Clutch-Running, Over
70	110-3806	1	Stopper
80	120-3143	1	Gasket
90	110-3808	1	Ball
100	110-3809	1	Yoke

Ref.	Part Number	Qty.	Description
110	110-3810	1	Brush Holder ASM
120	110-3811	1	Rear Bracket ASM
130	110-3812	1	Bushing
140	110-3813	1	Front Bracket ASM
150	110-3814	1	Bushing
160	110-3815	2	Bolt
170	110-3816	1	Fork Lever ASM
180	110-3817	1	Magnetic Switch ASM
190	110-3818	1	Screws (Set Of 4)

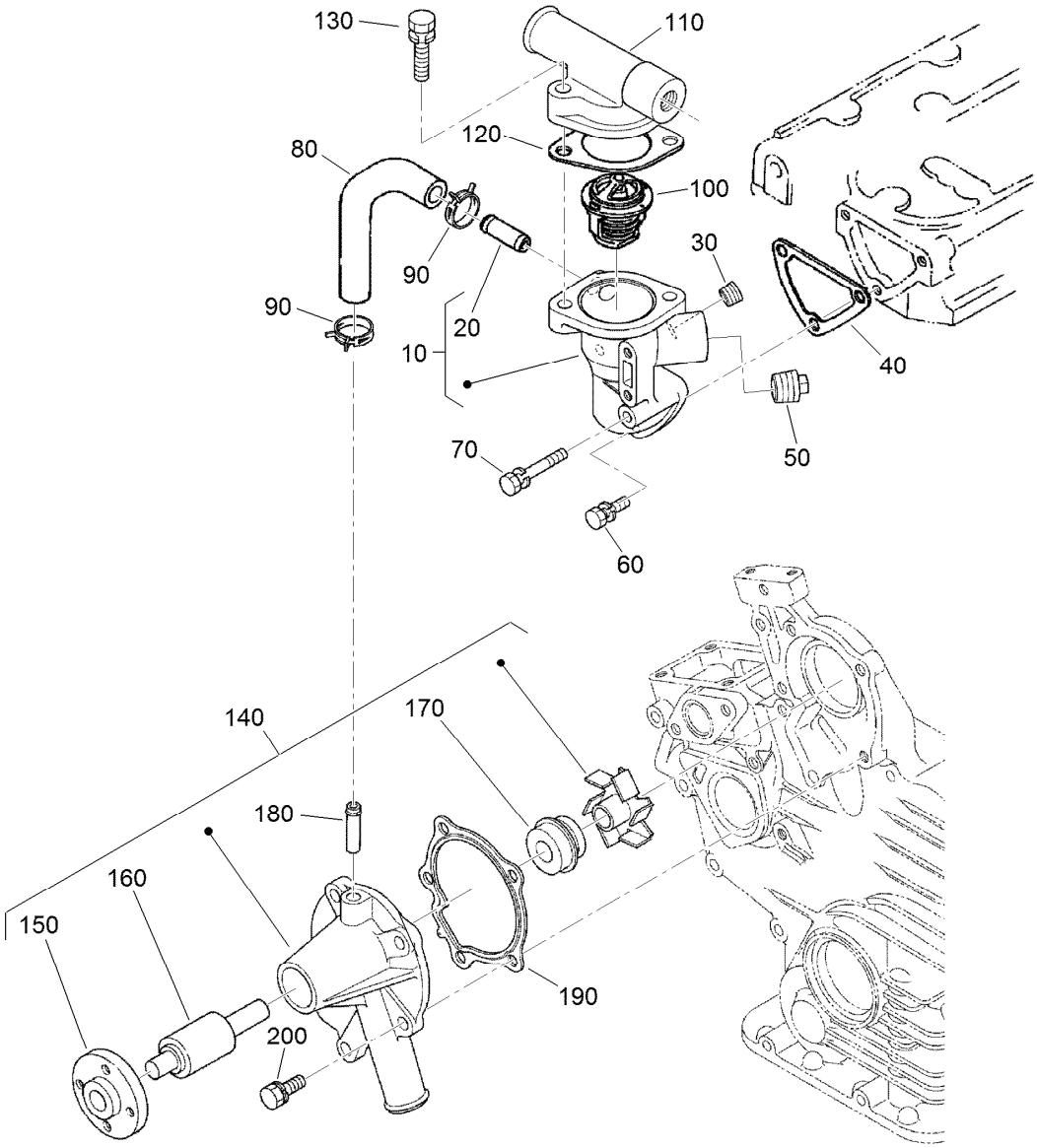

Water Flange, Thermostat and Water Pump Assembly

Ref.	Part Number	Qty.	Description
10	110-3819	1	Water Flange ASM
20	98-9580	1	Pipe-Return, Water
30	98-9444	1	Plug
40	110-3820	1	Gasket-Flange, Water
50	110-3821	1	Plug
60	98-7692	2	Bolt
70	105-3797	1	Bolt
80	110-3822	1	Pipe-Return, Water
90	98-9579	2	Band-Pipe
100	98-7778	1	Thermostat ASM

Ref.	Part Number	Qty.	Description
110	120-7575	1	Cover-Thermostat
120	105-3748	1	Gasket-Thermostat
130	98-7777	2	Bolt
140	110-3824	1	Water Pump ASM
150	100-1933	1	Flange-Pump, Water
160	100-1934	1	Bearing-Ball
170	99-3518	1	Water Pump Seal ASM
180	100-1932	1	Pipe-Return, Water
190	117-0330	1	Gasket-Pump, Water
200	100-1750	4	Bolt

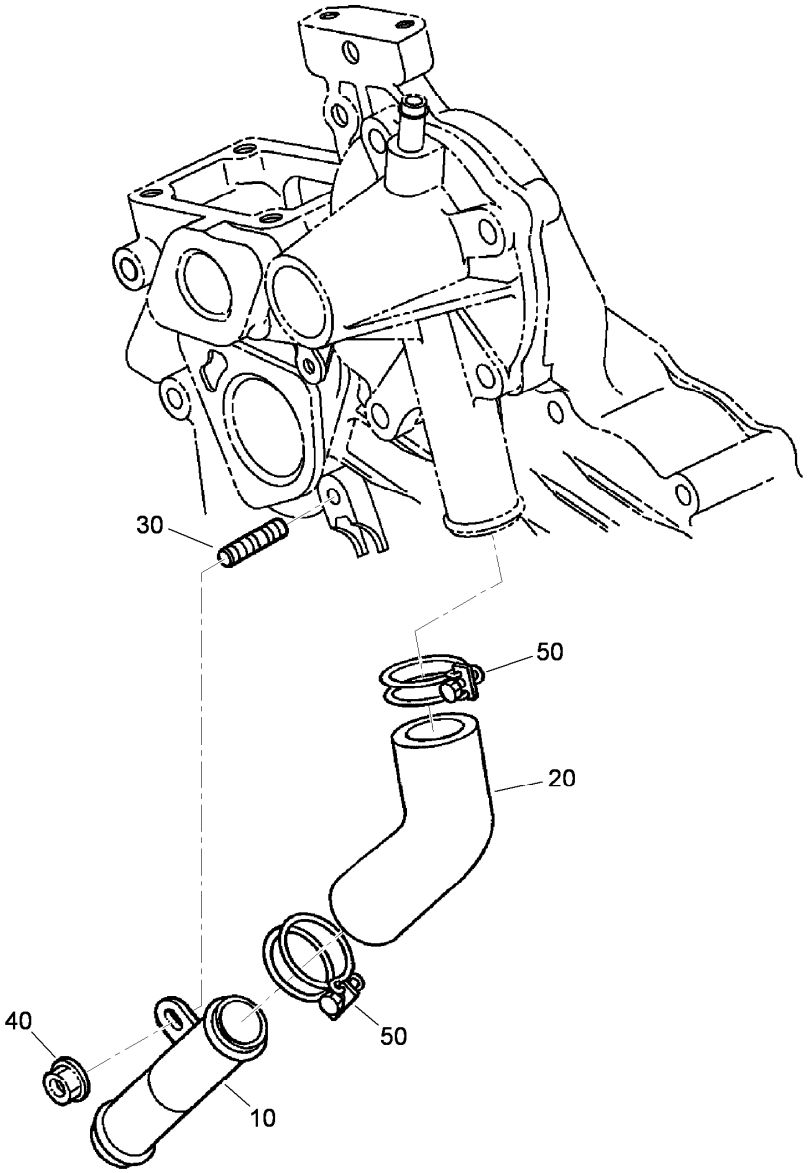

Water Pipe Assembly

Ref.	Part Number	Qty.	Description
10	100-1918	1	Pipe-Water
20	110-3827	1	Pipe-Water
30	100-1924	1	Stud
40	100-2203	1	Nut-Flange
50	110-3828	2	Band-Pipe

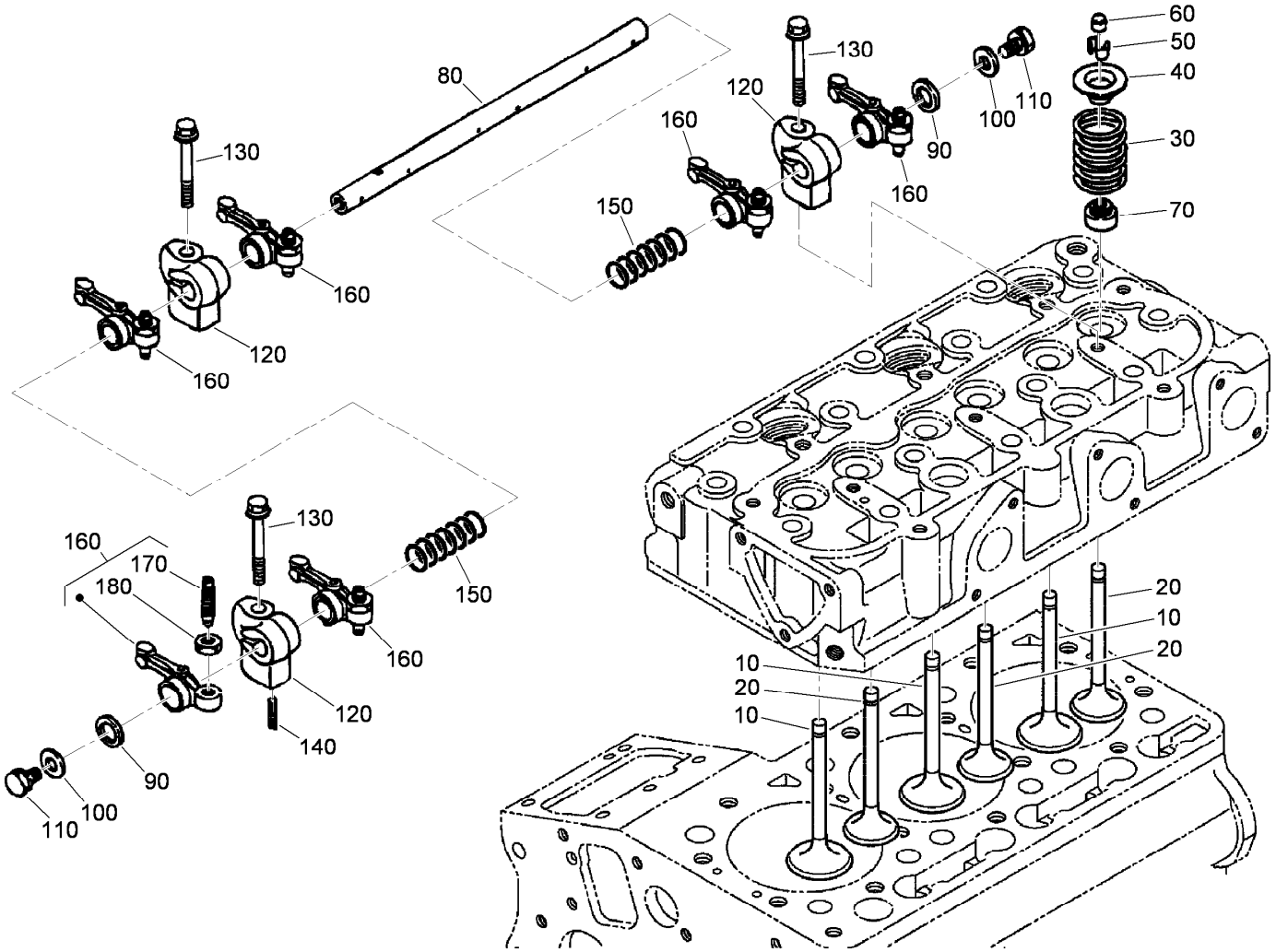

Valve and Rocker Arm Assembly

Ref.	Part Number	Qty.	Description
10	112-2514	3	Valve-Inlet
20	112-2515	3	Valve-Exhaust
30	100-1823	6	Spring-Valve
40	100-1825	6	Retainer-Spring, Valve
50	120-3136	6	Collet-Spring, Valve
60	100-2155	6	Cap-Valve
70	100-1797	6	Seal-Stem, Valve
80	112-8341	1	Shaft-Arm, Rocker
90	100-2044	2	Washer

Ref.	Part Number	Qty.	Description
100	110-3832	2	Washer-Plain
110	100-1762	2	Bolt
120	110-3833	3	Bracket-Arm, Rocker
130	110-3834	3	Bolt-Flange
140	98-7602	1	Pin-Spring
150	112-8342	2	Spring
160	120-3140	6	*obs* Rocker Arm ASM
170	100-1885	6	Screw-Adjusting
180	100-1827	6	Nut

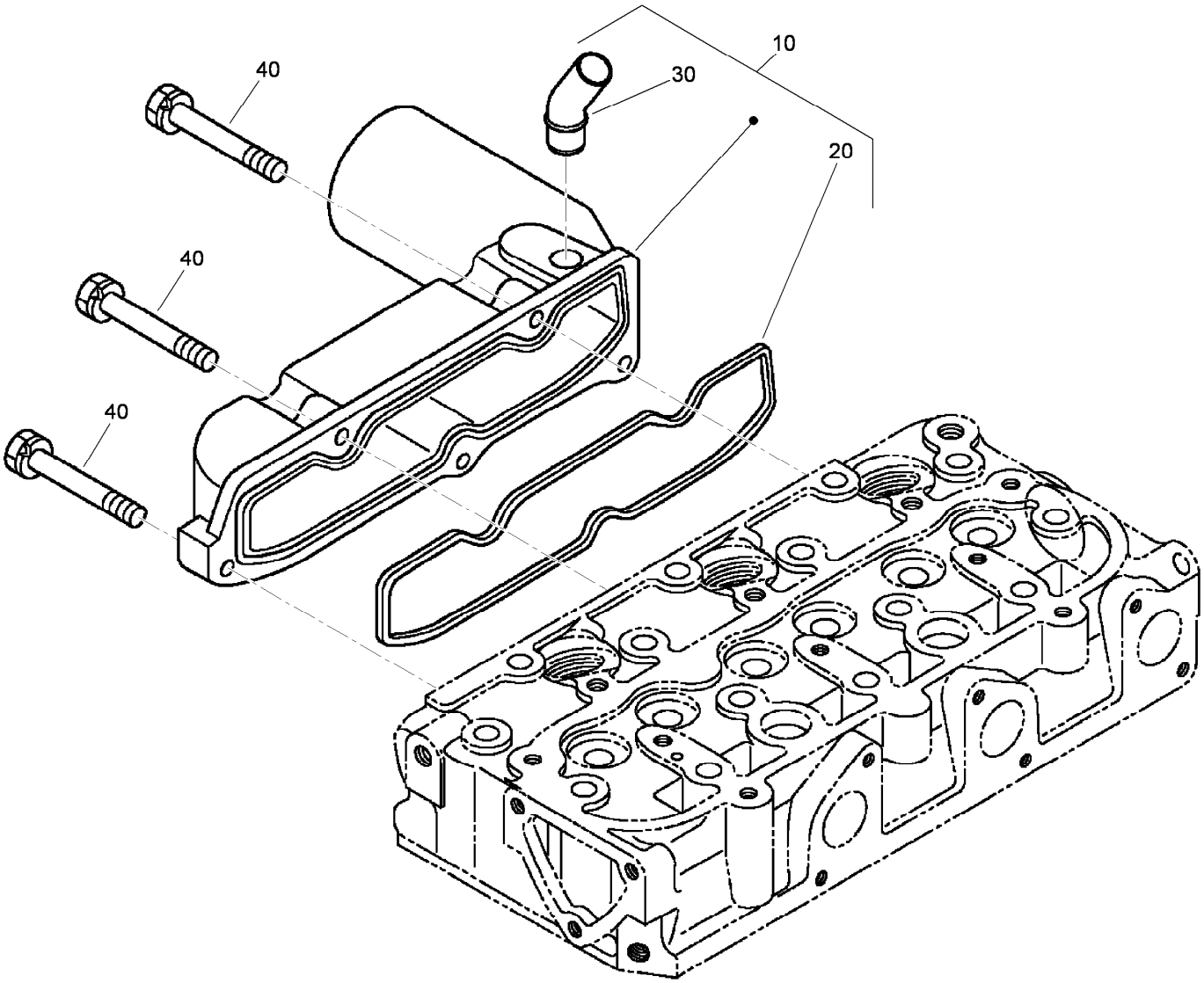

Intake Manifold Assembly

Ref.	Part Number	Qty.	Description
10	120-3141	1	Intake Manifold ASM
20	110-3838	1	Gasket-Manifold, Intake
30	110-3837	1	Pipe-Breather
40	98-9352	5	Bolt

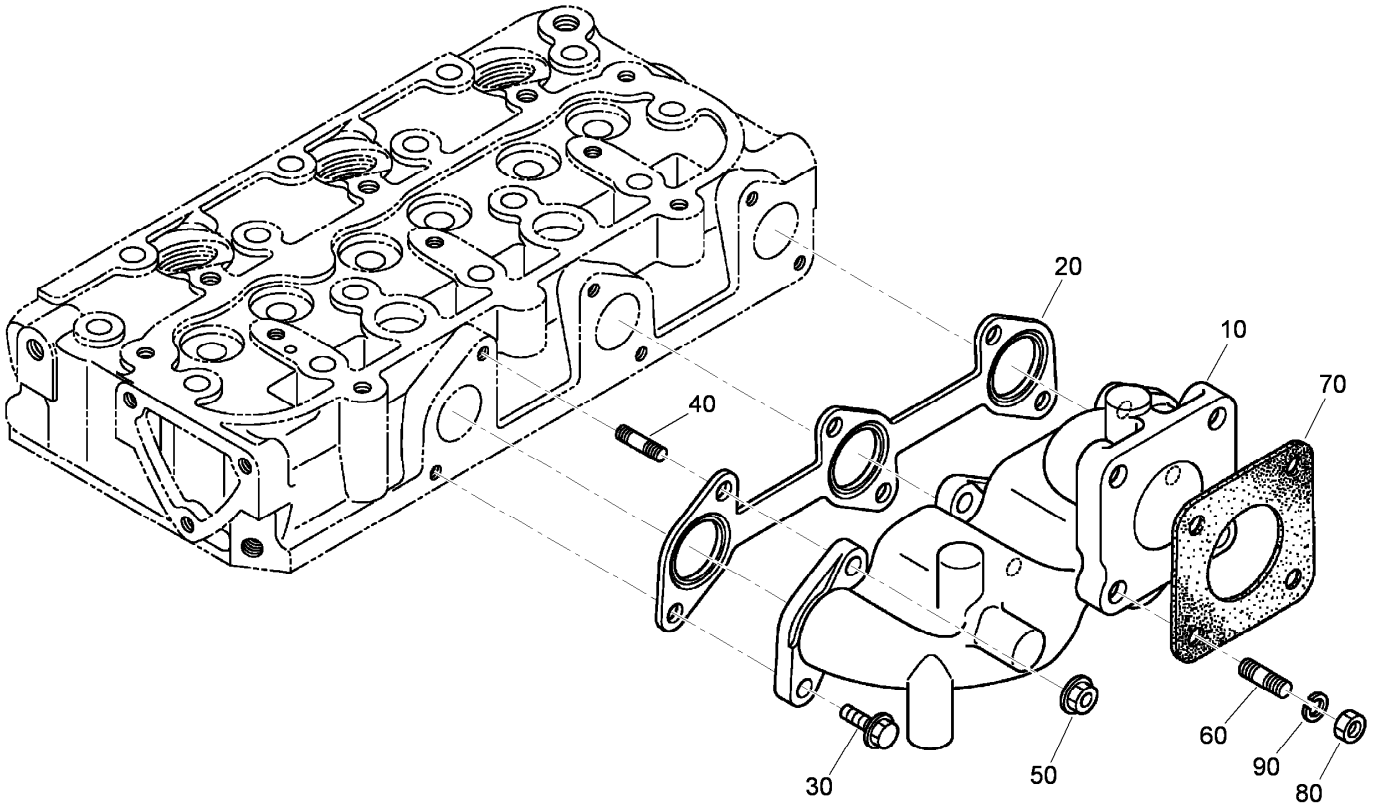

Exhaust Manifold Assembly

Ref.	Part Number	Qty.	Description
10	110-3839	1	Manifold-Exhaust
20	110-3840	1	Gasket-Manifold, Exhaust
30	100-1775	3	Bolt
40	100-2202	3	Stud
50	100-1778	3	Nut
60	98-7769	4	Stud
70	99-8343	1	Gasket-Muffler
80	98-7534	4	Nut
90	105-2893	4	Washer-Spring

Attachments and Accessories

For 04540 Greensmaster 3420 2-Wheel Drive Traction Unit

Product Name	Model/Part
Turf Evaluator	04399
8-Blade DPA Reel Mower	04613
11-Blade DPA Reel Mower	04614
14-Blade DPA Reel Mower	04615
Three-Wheel Drive Kit	04714
Hydraulic Oil Leak Detector Kit	04715
Light Kit	04717
Standard Seat Kit	04718
Premium Seat Kit	04719
Premium All Season Hydraulic Fluid (55 Gallon Drum)	108-1177
Premium All Season Hydraulic Fluid (5 Gallon Pail)	108-1178
Premium Engine Oil, 10w30 (55 Gallon Drum)	108-1179
Premium Engine Oil, 10w30 (5 Gallon Pail)	108-1180
Bimini Folding Shade Assembly	115-4510
Bag Kit	119-1715
Premium Synthetic Bio-Degradable Hydraulic Fluid (5 Gallon Pail)	119-2157
Premium Synthetic Bio-Degradable Hydraulic Fluid (55 Gallon Drum)	119-2158
Premium Armrest Kit	119-7105
Spark Arrester Kit	120-1951
Weight Kit	121-6665
400-hour Filter Maintenance Kit	30043
LH Armrest Asm	92-7307
Tire-TURFMATE	99-4506

Notes:

Notes:

TORO®

Count on it.