Form No. 3408-545 Rev A

TORO®

Count on it.

Parts Catalog

# TimeCutter® MX 4250

## Riding Mower

**Model No. 74760—Serial No. 400000000 and Up**

Register at www.Toro.com.
Original Instructions (EN)

*3408-545* A

# Ordering Replacement Parts

To order replacement parts, please supply the part number, the quantity, and the description of each part desired.

### Understanding Reference Numbers

Each identified part in an illustration has a reference number. The reference number for a part also appears in the parts list, along with other information about the part.

This catalog uses two special reference number formats, one to indicate parts in a service assembly and another to indicate the quantity of a given part in an illustration.

### Service Assembly Reference Numbers

Parts in service assemblies have reference numbers in the form a:b. The a represents the reference number of the entire service assembly and the b represents a sequential number unique to each part within the service assembly.

For example, a wheel assembly might be identified by reference number 6, the tire by 6:1, the valve by 6:2, and the wheel by 6:3. When you order the assembly identified by reference number 6, you receive all parts identified by reference numbers 6:1,6:2, and 6:3. However, you may also order any part individually. Reference numbers of this type appear in illustration and in parts lists.

### Reference Numbers Indicating Quantity

In an illustration, if a reference number indicates more than one part, the reference number has the form nX y. The n represents the quantity of the part, the X is the multiplication symbol, and the y represents the reference number.

For example, in an illustration, the reference number 2X 37 means that two of the parts identified by reference number 37 are indicated.

# Contents

Frame and Front Axle Assembly . . . . . 4
Deck Lift Assembly . . . . . 6
Fork and Caster Wheel Assembly . . . . . 8
Hydro Transaxle Assembly . . . . . 10
Left Hand Hydro Transaxle Assembly No. 119-3340 . . . . . 12
Right Hand Hydro Transaxle Assembly No. 119-3341 . . . . . 14
Brake Assembly . . . . . 16
Tire Assembly No. 131-3671 . . . . . 18
Seat Assembly . . . . . 20
Seat Assembly No. 131-4147 . . . . . 22
Motion Control Assembly . . . . . 24
Engine and Muffler Assembly . . . . . 26
Fuel System Assembly . . . . . 28
Carburetor Assembly . . . . . 30
Air Intake and Filtration Assembly . . . . . 32
Ignition and Electrical Assembly . . . . . 34
Crankcase and Crankshaft Assembly . . . . . 36
Governor Control Assembly . . . . . 38
Piston and Cylinder Head Assembly . . . . . 40
Blower Housing Assembly . . . . . 42
Gasket and Seal Kit . . . . . 44
Body Styling and Fuel Tank Assembly . . . . . 46
Battery and Electrical Assembly . . . . . 48
Deck Assembly . . . . . 50
42 Inch Deck and Decal Assembly No. 131-3610 . . . . . 52
Model-Specific Decal and Floor-Mat Assembly . . . . . 54
Speed Control Decal, HOC Decal and Service Decal Assembly . . . . . 56
Clutch Assembly . . . . . 58
Attachments and Accessories . . . . . 60

**© 2016—The Toro® Company**
**8111 Lyndale Avenue South**
**Bloomington, MN 55420**



**Contact us at www.Toro.com.**
**Printed in the USA.**
**All Rights Reserved**

# Frame and Front Axle Assembly

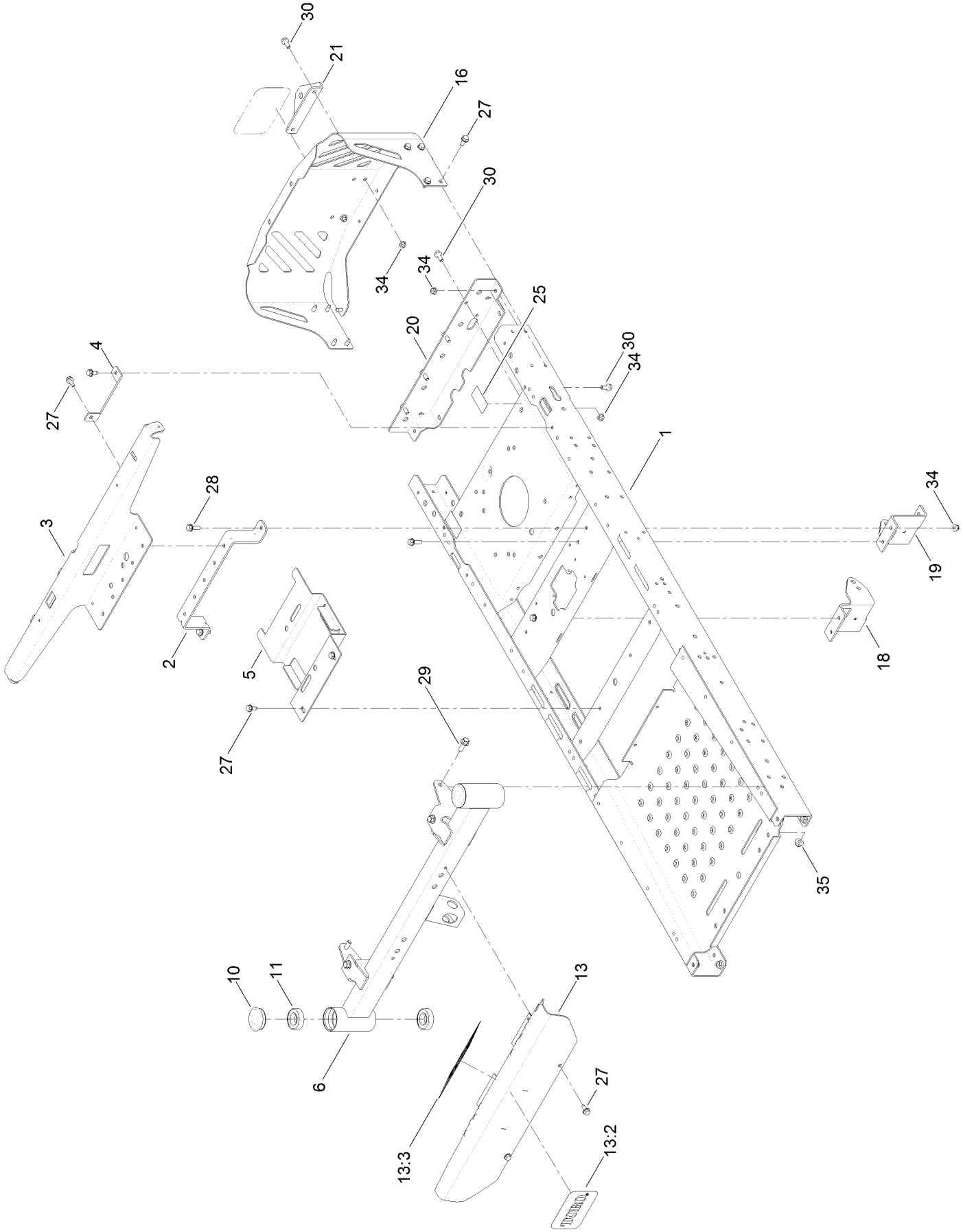

# Frame and Front Axle Assembly (continued)

| Ref. | Part Number | Qty. | Description |
|---|---|---|---|
| 1 | 127-3444-01 | 1 | Frame ASM |
| 2 | 119-3435-03 | 1 | Brace-Seat, Rear (Narrow) |
| 3 | 131-1040-03 | 1 | Support-Pod |
| 4 | 119-3431-03 | 2 | Support-Tank, Rear |
| 5 | 131-0914-03 | 1 | Bracket-Battery |
| 6 | 125-1742-01 | 1 | Axle-Front, Narrow |
| 10 | 116-4348 | 2 | Cap-Grease |
| 11 | 109-3678 | 4 | Bearing-Ball |
| 13 | 132-0890 | 1 | Footrest ASM |
| 13:2 | 105-8278 | 1 | Decal |
| 13:3 | 132-0869 | 1 | Decal-Danger |
| 16 | 127-3353-03 | 1 | Guard-Engine, Narrow |

| Ref. | Part Number | Qty. | Description |
|---|---|---|---|
| 18 | 131-0901-01 | 1 | Mount-Hydro, Front (Right) |
| 19 | 131-0902-01 | 1 | Mount-Hydro, Front (Left) |
| 20 | 130-6950-01 | 1 | Crossmember-Rear, Narrow |
| 21 | 117-1232-03 | 1 | Bracket-Hitch |
| 25 | 121-2989 | 2 | Decal-Bypass |
| 27 | 32144-70 | 18 | Screw-HWHTF |
| 28 | 3234-29 | 4 | Screw-HHF |
| 29 | 3234-42 | 6 | Screw-HHF |
| 30 | 3234-47 | 8 | Screw-HHF |
| 34 | 104-8300 | 12 | Nut-Flange, NI |
| 35 | 104-8301 | 6 | Nut-Flange, NI |

# Deck Lift Assembly

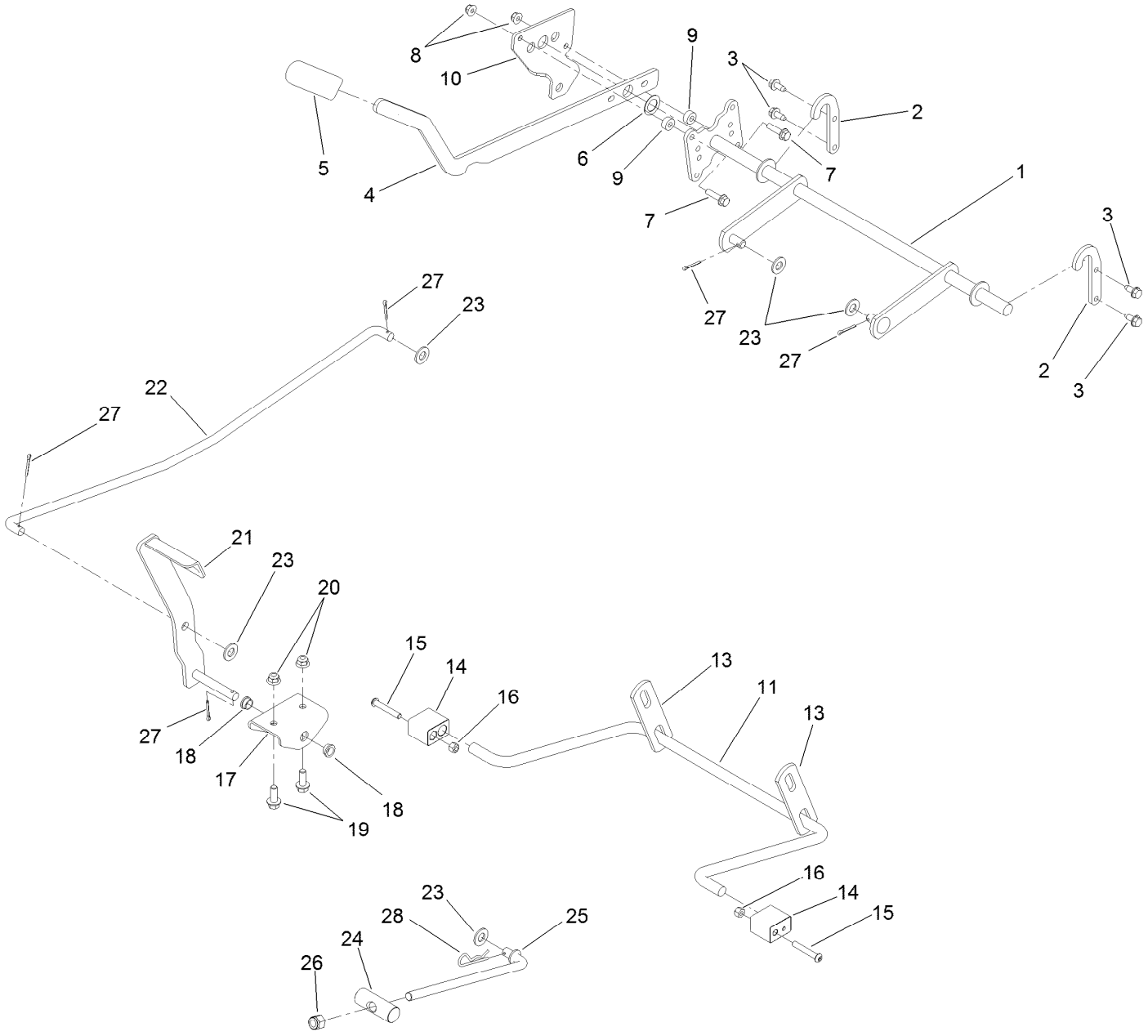

# Deck Lift Assembly (continued)

| Ref. | Part Number | Qty. | Description |
|---|---|---|---|
| 1 | 132-6872-03 | 1 | Lift-Deck, Narrow |
| 2 | 119-8875 | 2 | Bracket-Lift |
| 3 | 32144-70 | 4 | Screw-HWHTF |
| 4 | 119-3427-03 | 1 | Lever-Lift |
| 5 | 1-633268 | 1 | Grip-Lever |
| 6 | 3-6498 | 2 | Washer-Thrust |
| 7 | 3234-36 | 2 | Screw-HHF |
| 8 | 104-8300 | 2 | Nut-Flange, NI |
| 9 | 121-1759 | 2 | Spacer |
| 10 | 131-3933 | 1 | Plate-Footlift |
| 11 | 108-7839 | 1 | Arm-Lift, Rear |
| 13 | 108-7840 | 2 | Link-Lift |
| 14 | 108-7845 | 2 | Block-Pivot |
| 15 | 120-5499 | 2 | Screw-HSBH |
| 16 | 3296-29 | 2 | Nut-Lock, NI |
| 17 | 120-2294-03 | 1 | Bracket-Footlift |
| 18 | 256-156 | 2 | Bushing-Flange |
| 19 | 3234-42 | 2 | Screw-HHF |
| 20 | 104-8301 | 2 | Nut-Flange, NI |
| 21 | 132-6939-03 | 1 | Pedal ASM |
| 22 | 120-2242 | 1 | Rod-Footlift |
| 23 | 3256-26 | 5 | Washer-Flat |
| 24 | 119-8810 | 1 | Pin-Pivot |
| 25 | 133-4319 | 1 | Rod-Mount, Deck |
| 26 | 3296-19 | 1 | Nut-Hex |
| 27 | 3272-11 | 5 | Pin-Cotter |
| 28 | 1-806005 | 1 | Pin-Cotter |

# Fork and Caster Wheel Assembly

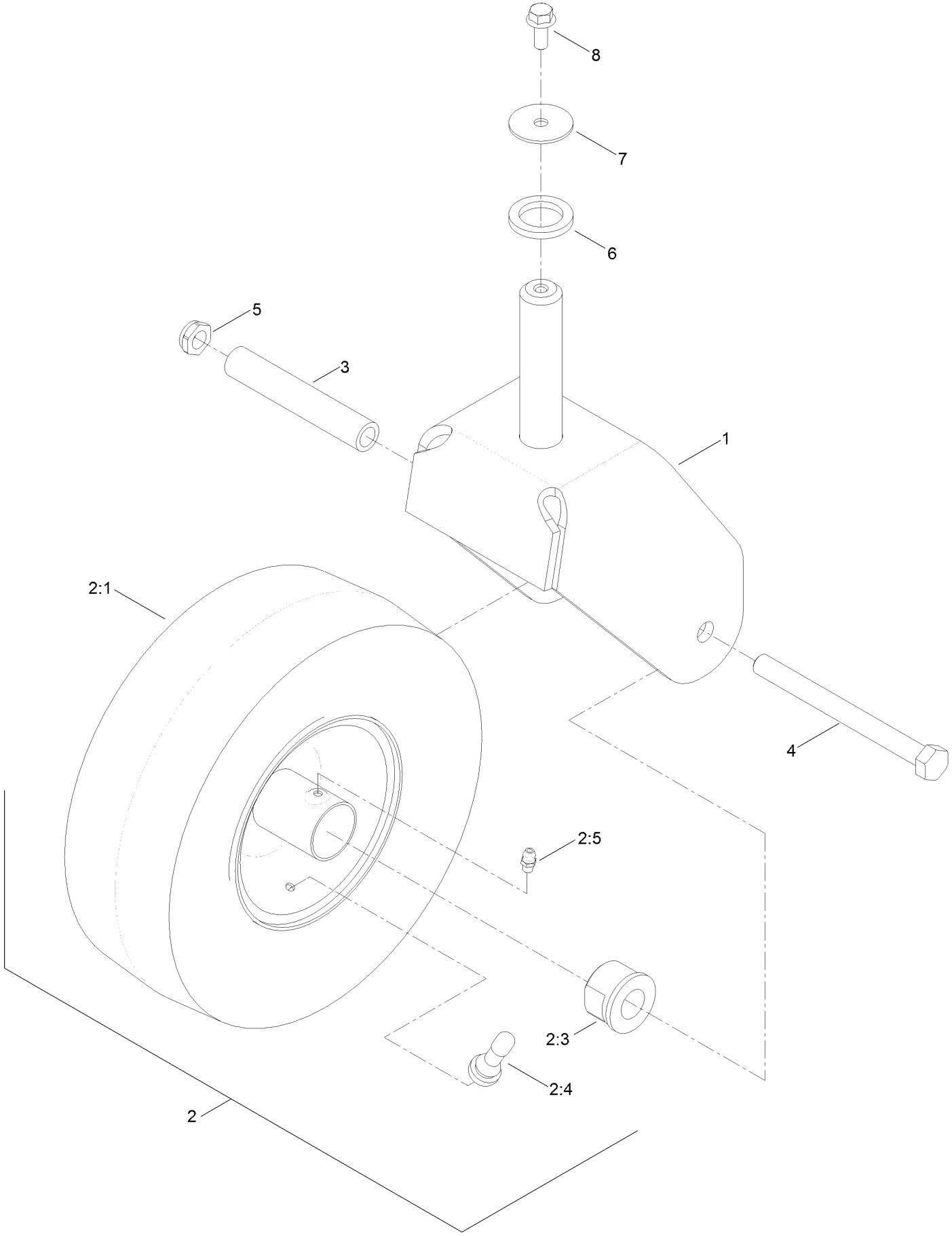

# Fork and Caster Wheel Assembly (continued)

| Ref. | Part Number | Qty. | Description |
|---|---|---|---|
| 1 | 120-2266-01 | 2 | Fork-Caster |
| 2 | 130-0736 | 2 | Caster Wheel ASM |
| 2:1 | 130-0735 | 1 | Tire |
| 2:3 | 114-1640 | 2 | Bushing-Flange |
| 2:4 | 232-27 | 1 | Stem-Valve |
| 2:5 | 302-5 | 1 | Fitting-Grease |
| 2:6 | 105-0844 | 1 | Tube-Inner ■ ● |

| Ref. | Part Number | Qty. | Description |
|---|---|---|---|
| 3 | 104-3667 | 2 | Spanner-Wheel |
| 4 | 325-22 | 2 | Screw-HH |
| 5 | 3296-45 | 2 | Nut-Lock, NI |
| 6 | 117-7394 | 2 | Washer-Thrust |
| 7 | 3256-68 | 2 | Washer-Flat |
| 8 | 3234-47 | 2 | Screw-HHF |

● Not illustrated

■ Optional Equipment

# Hydro Transaxle Assembly

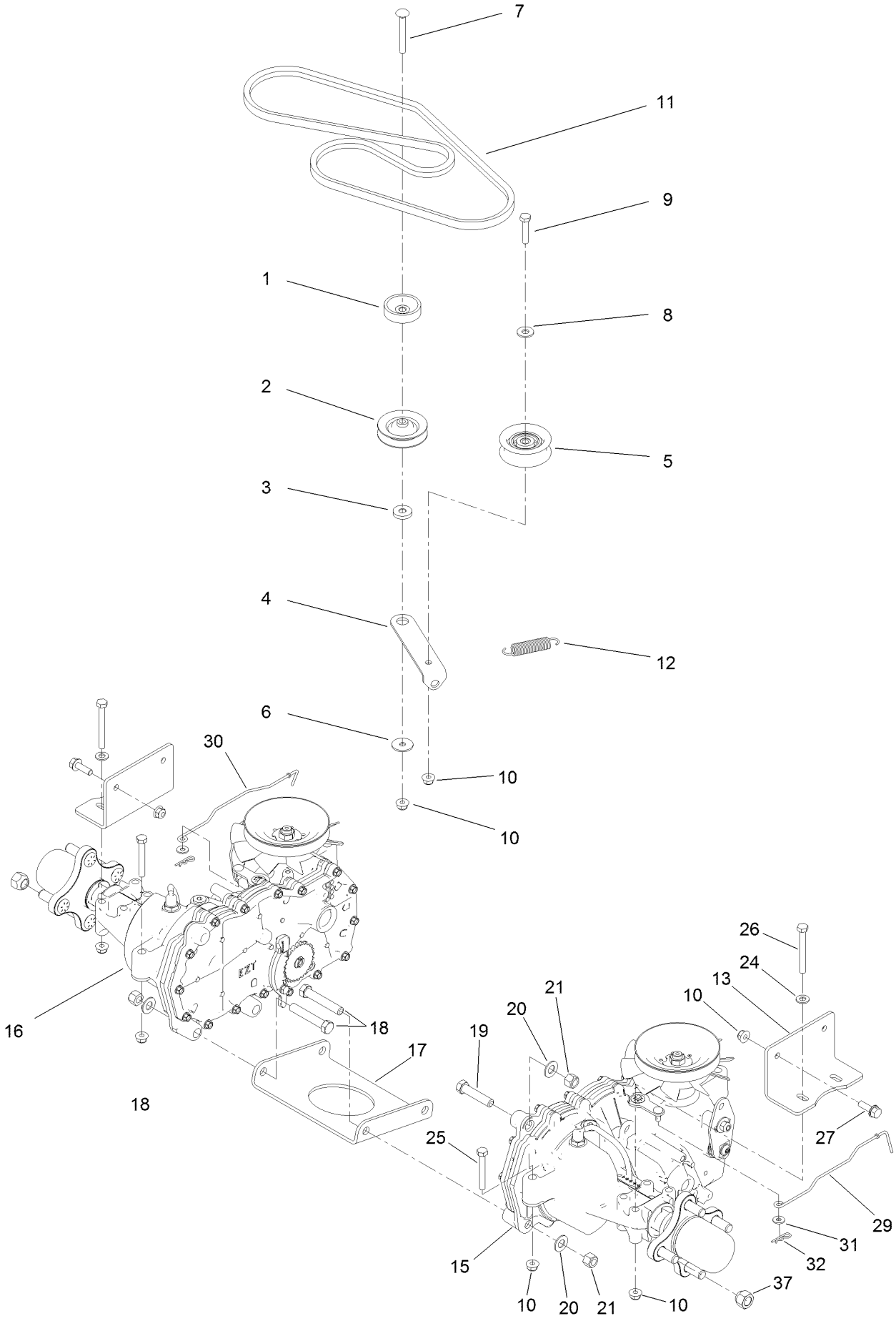

# Hydro Transaxle Assembly (continued)

| Ref. | Part Number | Qty. | Description |
|---|---|---|---|
| 1 | 119-3353 | 1 | Spacer |
| 2 | 119-8822 | 1 | Pulley-Idler |
| 3 | 119-3327 | 1 | Spacer-Arm, Idler |
| 4 | 119-3326 | 1 | Arm-Idler |
| 5 | 106-2176 | 1 | Pulley-Idler |
| 6 | 5-4460 | 1 | Washer-Pivot |
| 7 | 3230-8 | 1 | Screw-CARR |
| 8 | 3256-3 | 1 | Washer-Flat |
| 9 | 322-7 | 1 | Screw-HH |
| 10 | 104-8300 | 14 | Nut-Flange, NI |
| 11 | 130-6975 | 1 | V-Belt |
| 12 | 104-6415 | 1 | Spring-Return, Pedal |
| 13 | 117-7264-03 | 2 | Mount-Hydro |
| 15 | 119-3340 | 1 | LH Hydro Transaxle ASM |
| 16 | 119-3341 | 1 | RH Hydro Transaxle ASM |
| 17 | 119-3339-03 | 1 | Plate-Cross, Hydro |
| 18 | 324-10 | 4 | Screw-HH |
| 19 | 324-8 | 2 | Screw-HH |
| 20 | 3256-25 | 6 | Washer-Flat |
| 21 | 3296-48 | 6 | Nut-Lock, NI |
| 24 | 3256-23 | 6 | Washer-Flat |
| 25 | 322-11 | 4 | Screw-HH |
| 26 | 322-13 | 4 | Screw-HH |
| 27 | 3234-29 | 4 | Screw-HHF |
| 29 | 131-0900 | 1 | Rod-Bypass, LH |
| 30 | 130-7049 | 1 | Rod-Bypass, RH |
| 31 | 119-8952 | 2 | Washer |
| 32 | 3290-307 | 2 | Pin-Cotter |
| 37 | 242-50 | 8 | Nut-Lug |

# Left Hand Hydro Transaxle Assembly No. 119-3340

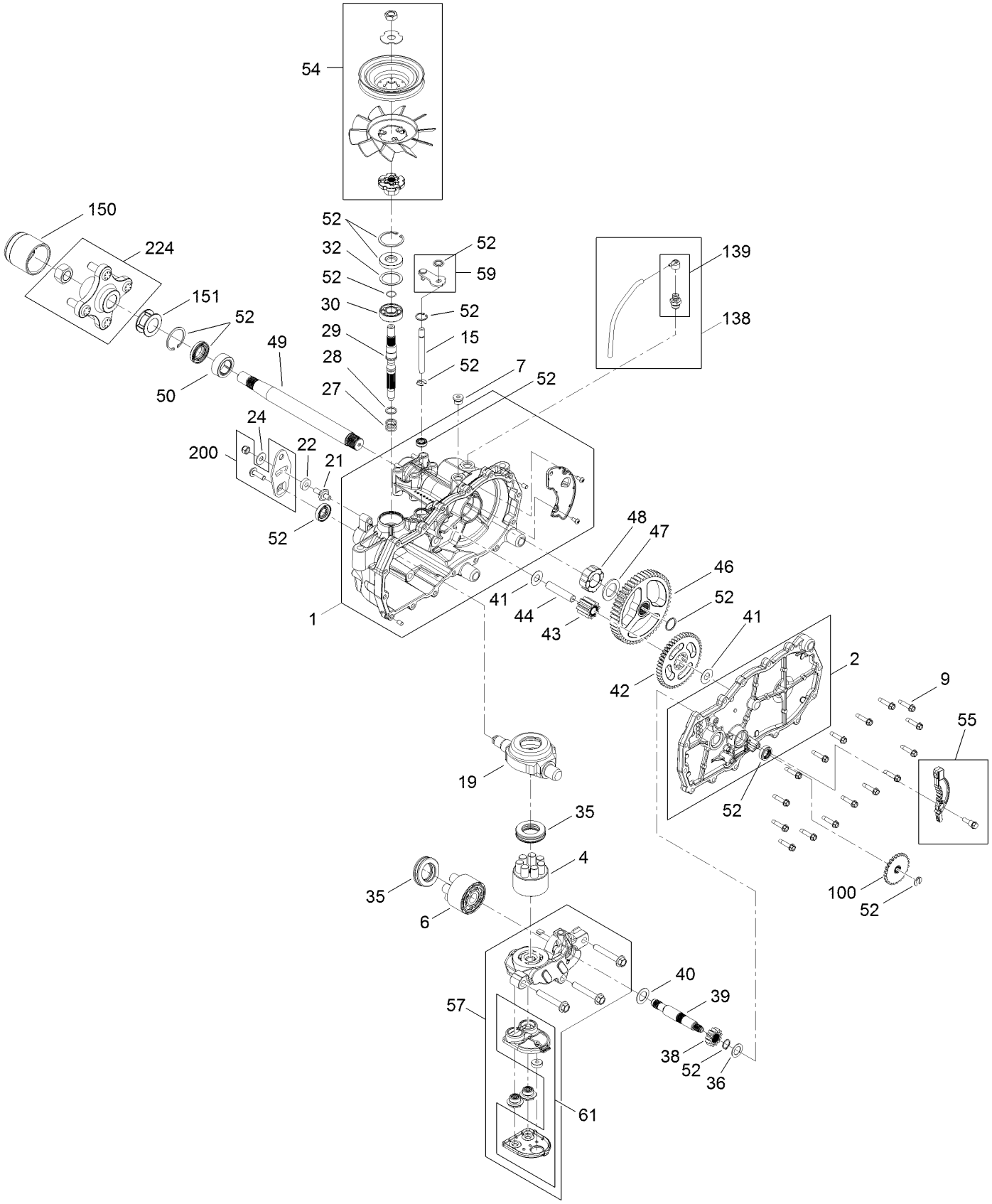

# Left Hand Hydro Transaxle Assembly No. 119-3340 (continued)

| Ref. | Part Number | Qty. | Description |
|---|---|---|---|
| 1 | 106-8695 | 1 | Main Housing ASM |
| 2 | 106-8696 | 1 | Side ASM |
| 4 | 110-8561 | 1 | Pump Block ASM |
| 6 | 103-2666 | 1 | Cylinder Block Kit |
| 7 | 104-2189 | 1 | Plug-Thread, Straight |
| 9 | 104-5305 | 16 | Screw-HHF |
| 15 | 106-8678 | 1 | Rod-Bypass |
| 19 | 104-5304 | 1 | Swashplate-Trunnion |
| 21 | 104-2116 | 1 | Stud |
| 22 | 112-9853 | 1 | Puck-Friction |
| 24 | 114-8491 | 1 | Washer |
| 27 | 120-5537 | 1 | Spring-Compression |
| 28 | 120-5538 | 1 | Washer |
| 29 | 104-5306 | 1 | Shaft-Input |
| 30 | 104-5311 | 1 | Bearing-Ball |
| 32 | 104-5308 | 1 | Spacer |
| 35 | 94-6922 | 2 | Bearing-Thrust |
| 36 | 104-5339 | 1 | Washer-Flat |
| 38 | 104-5316 | 1 | Gear-Pinnion, 13T |
| 39 | 106-8683 | 1 | Shaft-Motor |
| 40 | 104-5360 | 1 | Washer |
| 41 | 119-5541 | 2 | Washer |
| 42 | 104-5317 | 1 | Gear-10T/48T |
| 43 | 104-5318 | 1 | Gear-Jackshaft, 10T |
| 44 | 104-5329 | 1 | Pin-Jackshaft |
| 46 | 112-9855 | 1 | Gear-52T, Bull |
| 47 | 112-9856 | 1 | Washer |
| 48 | 112-9857 | 1 | Bearing-Sleeve |
| 49 | 121-5732 | 1 | Shaft-Axle |
| 50 | 112-9859 | 1 | Bushing-Axle |
| 52 | 106-8686 | 1 | Seal Kit |
| 54 | 121-5729 | 1 | Fan Pulley Kit |
| 55 | 106-8688 | 1 | Brake Arm Kit |
| 57 | 112-9861 | 1 | Center Section Filter Kit |
| 58 | 104-2147 | 1 | Sealant ● |
| 59 | 120-5549 | 1 | Bypass Kit |
| 61 | 114-1634 | 1 | Filter Kit |
| 100 | 106-8694 | 1 | Disc-Brake, Cog |
| 138 | 112-9866 | 1 | Breather Kit |
| 139 | 114-1635 | 1 | Breather ASM |
| 150 | 116-6214 | 1 | Cap-Axle, Long |
| 151 | 121-5734 | 1 | Tube-Axle |
| 200 | 117-5362 | 1 | Arm Control Kit |
| 224 | 109-3538 | 1 | Hub Kit |

● Not illustrated

# Right Hand Hydro Transaxle Assembly No. 119-3341

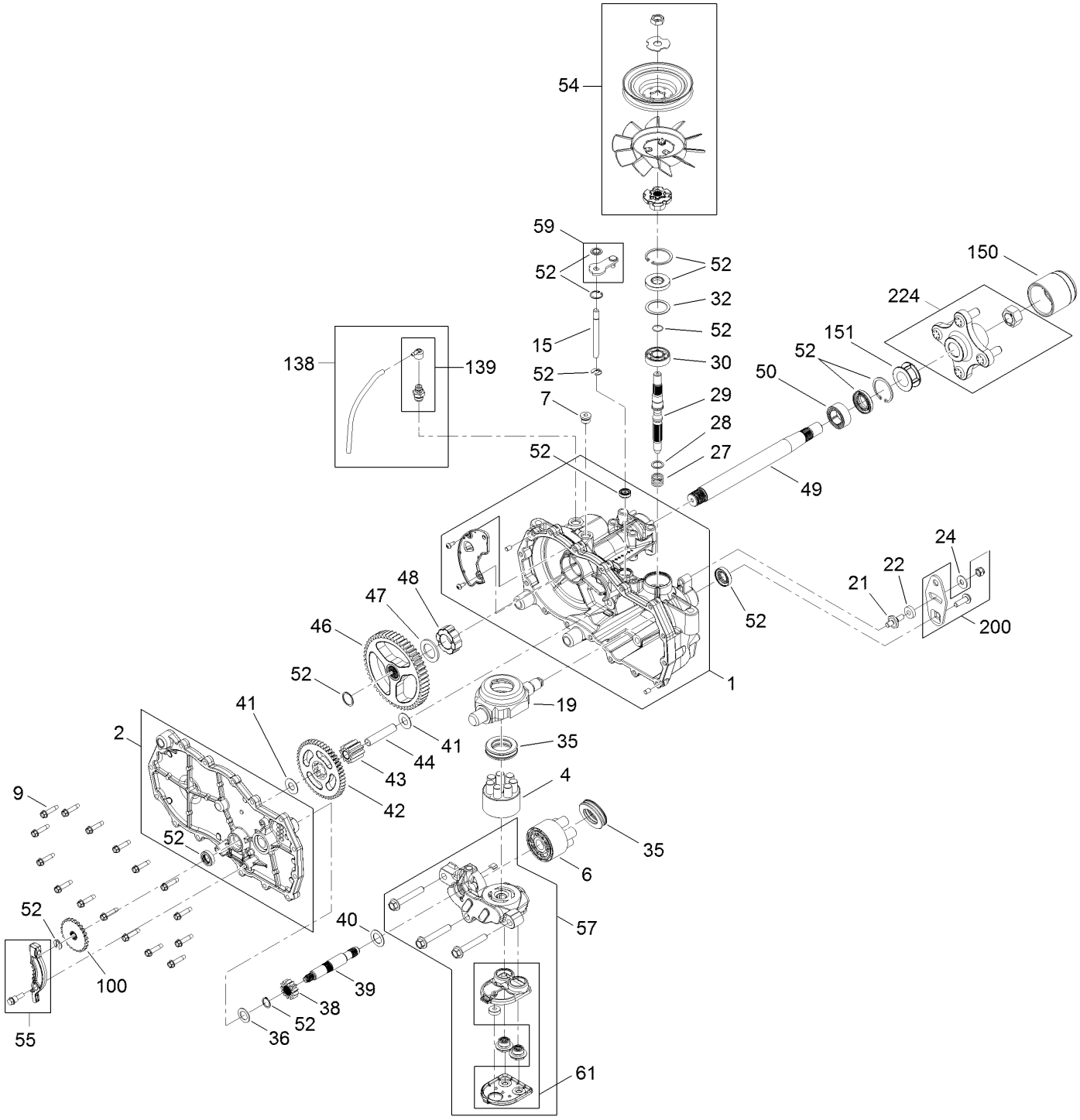

# Right Hand Hydro Transaxle Assembly No. 119-3341 (continued)

| Ref. | Part Number | Qty. | Description |
|---|---|---|---|
| 1 | 106-8674 | 1 | Main Housing ASM |
| 2 | 106-8675 | 1 | Side ASM |
| 4 | 110-8561 | 1 | Pump Block ASM |
| 6 | 103-2666 | 1 | Cylinder Block Kit |
| 7 | 104-2189 | 1 | Plug-Thread, Straight |
| 9 | 104-5305 | 16 | Screw-HHF |
| 15 | 106-8678 | 2 | Rod-Bypass |
| 19 | 104-5304 | 1 | Swashplate-Trunnion |
| 21 | 104-2116 | 1 | Stud |
| 22 | 112-9853 | 1 | Puck-Friction |
| 24 | 114-8491 | 1 | Washer |
| 27 | 120-5537 | 1 | Spring-Compression |
| 28 | 120-5538 | 1 | Washer |
| 29 | 104-5306 | 1 | Shaft-Input |
| 30 | 104-5311 | 1 | Bearing-Ball |
| 32 | 104-5308 | 1 | Spacer |
| 35 | 94-6922 | 2 | Bearing-Thrust |
| 36 | 104-5339 | 1 | Washer-Flat |
| 38 | 104-5316 | 1 | Gear-Pinnion, 13T |
| 39 | 106-8683 | 1 | Shaft-Motor |
| 40 | 104-5360 | 1 | Washer |
| 41 | 119-5541 | 2 | Washer |
| 42 | 104-5317 | 1 | Gear-10T/48T |
| 43 | 104-5318 | 1 | Gear-Jackshaft, 10T |
| 44 | 104-5329 | 1 | Pin-Jackshaft |
| 46 | 112-9855 | 1 | Gear-52T, Bull |
| 47 | 112-9856 | 1 | Washer |
| 48 | 112-9857 | 1 | Bearing-Sleeve |
| 49 | 121-5732 | 1 | Shaft-Axle |
| 50 | 112-9859 | 1 | Bushing-Axle |
| 52 | 106-8686 | 1 | Seal Kit |
| 54 | 121-5729 | 1 | Fan Pulley Kit |
| 55 | 106-8688 | 1 | Brake Arm Kit |
| 57 | 112-9862 | 1 | Center Section Filter Kit |
| 58 | 104-2147 | 1 | Sealant ● |
| 59 | 107-2489 | 1 | Bypass Arm Kit |
| 61 | 114-1634 | 1 | Filter Kit |
| 100 | 106-8694 | 1 | Disc-Brake, Cog |
| 138 | 112-9866 | 1 | Breather Kit |
| 139 | 114-1635 | 1 | Breather ASM |
| 150 | 116-6214 | 1 | Cap-Axle, Long |
| 151 | 121-5734 | 1 | Tube-Axle |
| 200 | 117-5362 | 1 | Arm Control Kit |
| 224 | 109-3538 | 1 | Hub Kit |

● Not illustrated

# Brake Assembly

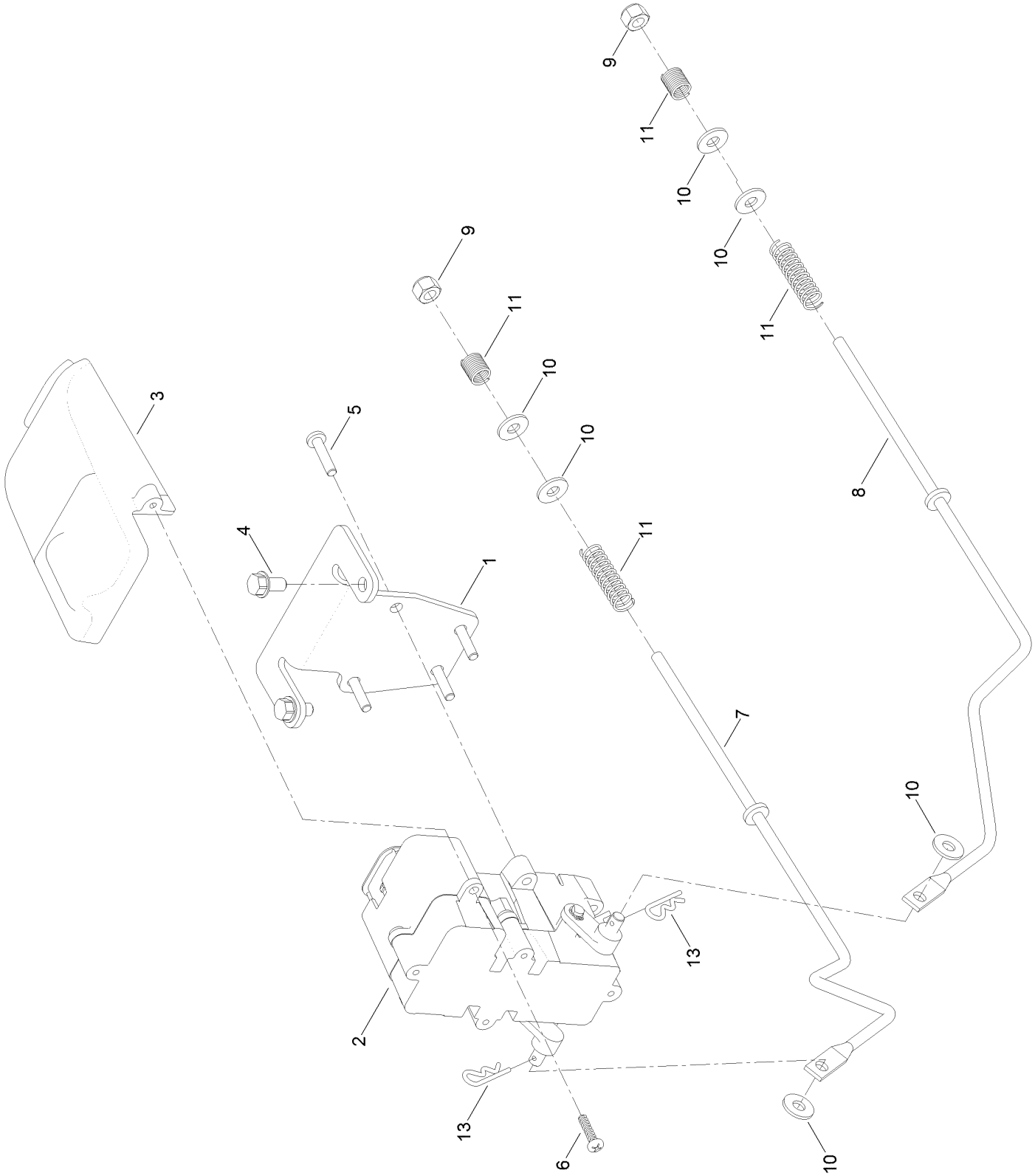

# Brake Assembly (continued)

| Ref. | Part Number | Qty. | Description |
|---|---|---|---|
| 1 | 130-0790-03 | 1 | Bracket-Mount, Brake |
| 2 | 132-0935 | 1 | Brake Box ASM |
| 3 | 132-6949 | 1 | Cover-Connector |
| 4 | 32144-4 | 2 | Screw-HWH |
| 5 | 32144-36 | 4 | Screw-PPH |
| 6 | 94-4496 | 2 | Screw-PPH |
| 7 | 121-2974 | 1 | Rod-Brake, RH |
| 8 | 121-2975 | 1 | Rod-Brake, LH |
| 9 | 3296-42 | 2 | Nut-Lock, NI |
| 10 | 119-8952 | 6 | Washer |
| 11 | 117-1169 | 4 | Spring-Compression |
| 13 | 3290-307 | 2 | Pin-Cotter |

# Tire Assembly No. 131-3671

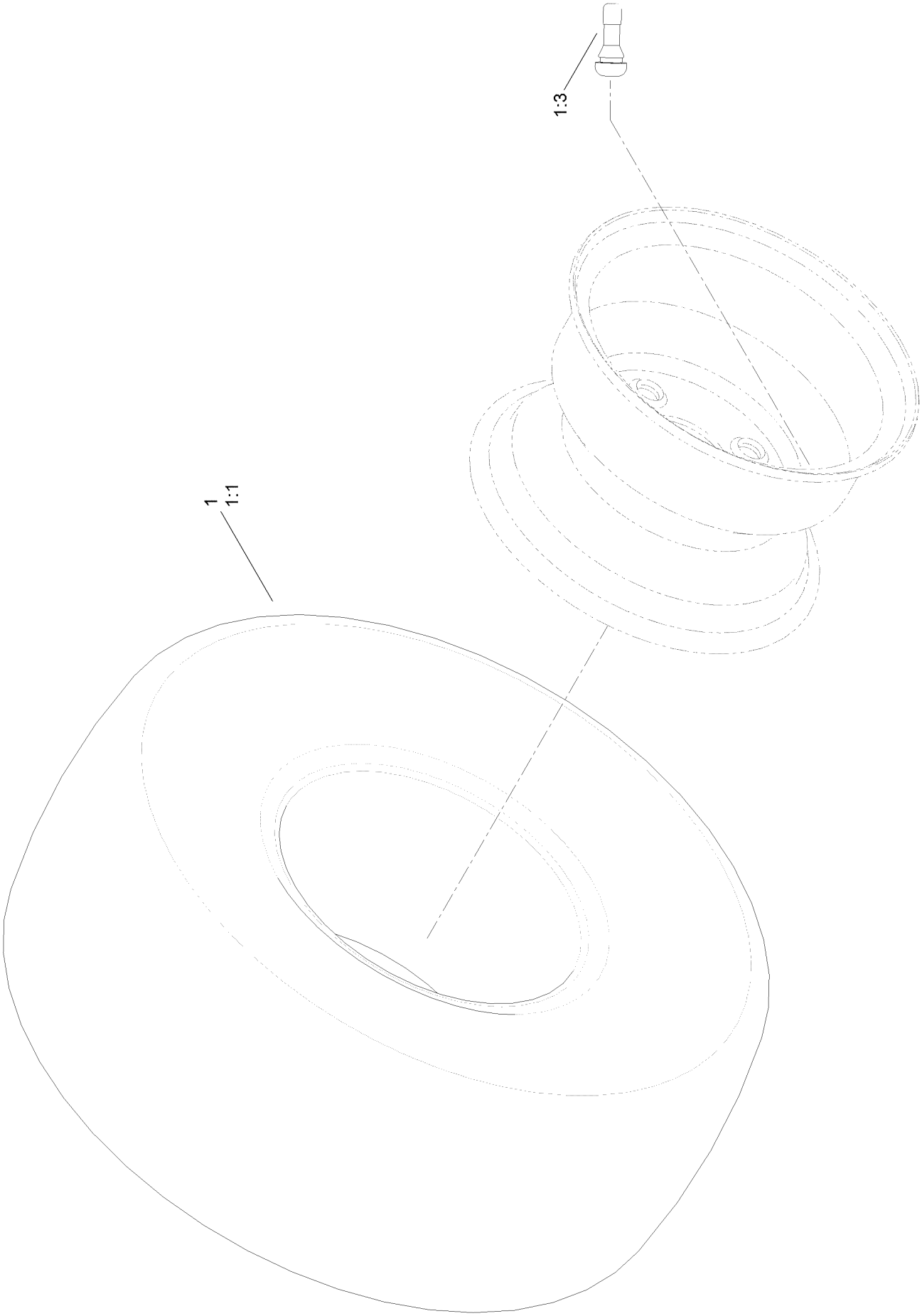

# Tire Assembly No. 131-3671 (continued)

| Ref. | Part Number | Qty. | Description |
|---|---|---|---|
| 1 | 131-3671 | 2 | 2 Ply Wheel And Tire ASM |
| 1:1 | 131-3678 | 1 | Tire-2 Ply |
| 1:3 | 232-27 | 1 | Stem-Valve |
| 1:99 | 107-2491 | 1 | Tube-Tire ● |

● Not illustrated

# Seat Assembly

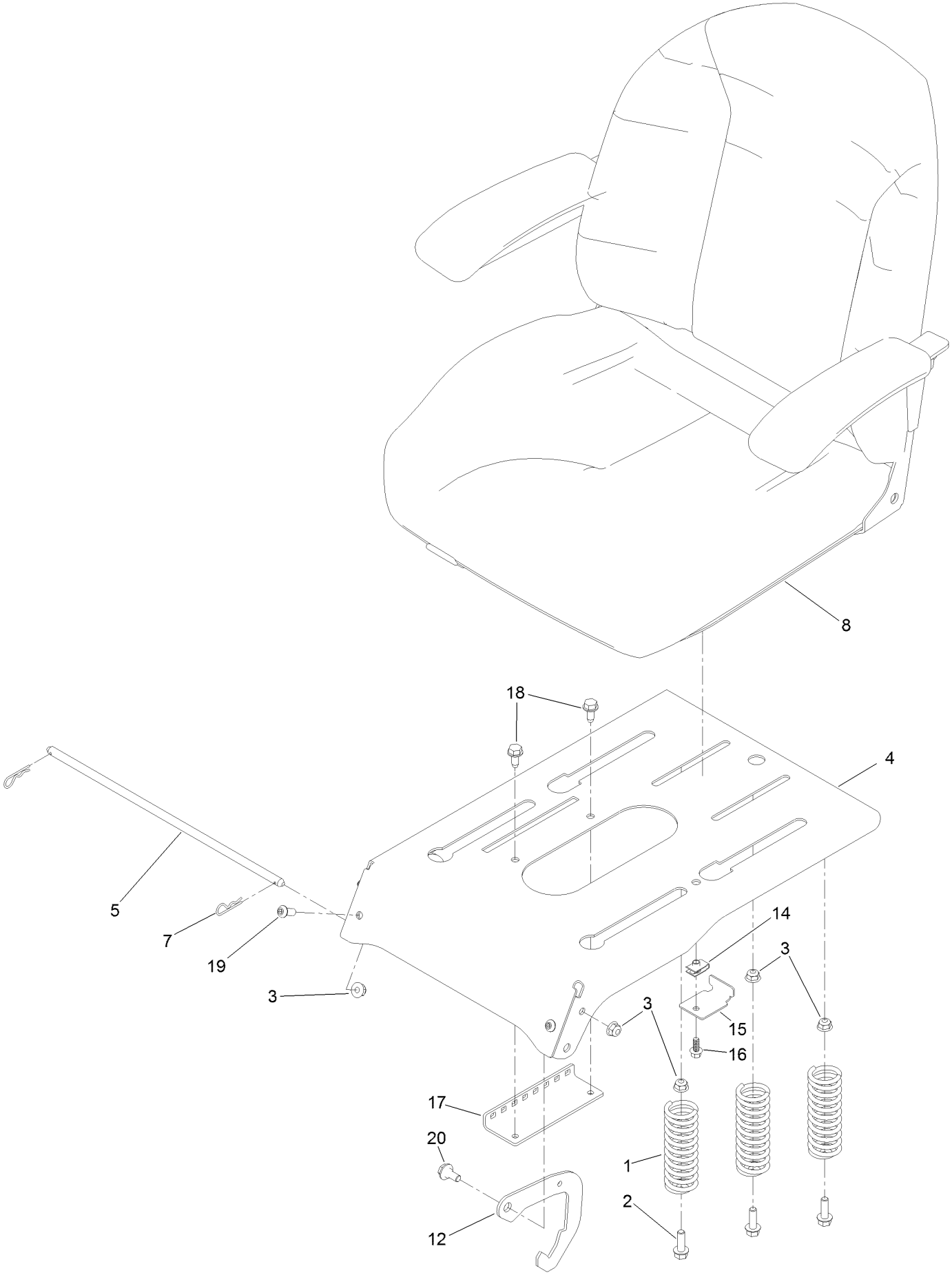

# Seat Assembly (continued)

| Ref. | Part Number | Qty. | Description |
|---|---|---|---|
| 1 | 92-7054 | 3 | Spring-Compression |
| 2 | 3234-29 | 3 | Screw-HHF |
| 3 | 104-8300 | 7 | Nut-Flange, NI |
| 4 | 136-5571-03 | 1 | PAN-Seat, Deluxe |
| 5 | 119-3433 | 1 | Rod-Pivot, Narrow |
| 7 | 3290-250 | 2 | Pin-Cotter |
| 8 | 131-4147 | 1 | Seat ASM |
| 12 | 132-9353 | 2 | Latch-Seat |

| Ref. | Part Number | Qty. | Description |
|---|---|---|---|
| 14 | 107069 | 1 | Clip |
| 15 | 131-1038 | 1 | Bracket-Stop, Seat |
| 16 | 99-6810 | 1 | Screw-HHF |
| 17 | 131-4008-03 | 1 | Bracket-Latch, Seat |
| 18 | 32144-70 | 2 | Screw-HWHTF |
| 19 | 3274-55 | 2 | Screw-HSBH |
| 20 | 19-1470 | 2 | Screw-Shoulder |

# Seat Assembly No. 131-4147

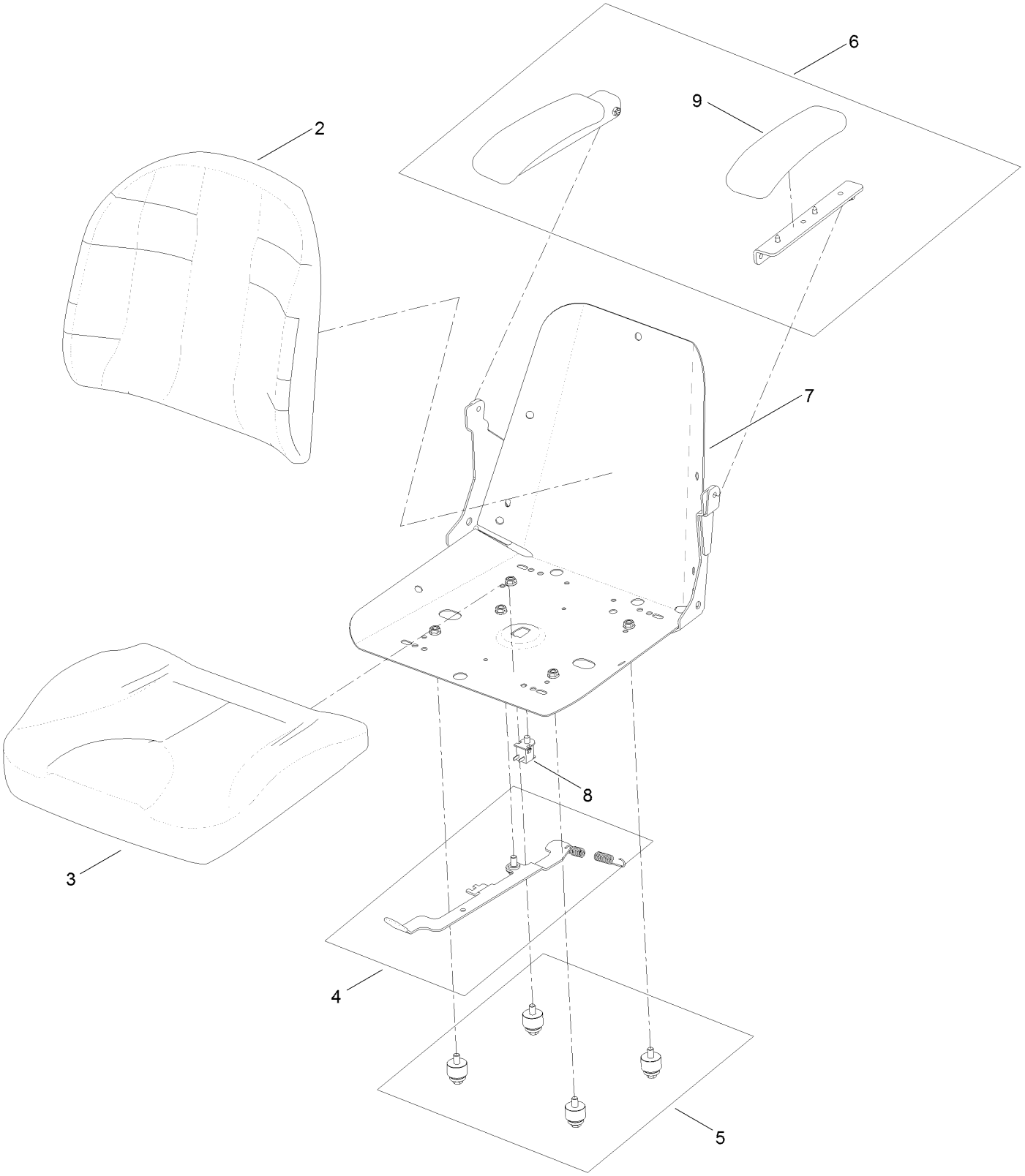

# Seat Assembly No. 131-4147 (continued)

| Ref. | Part Number | Qty. | Description |
|---|---|---|---|
| 2 | 131-4149 | 1 | Cushion-Seat, Back |
| 3 | 131-4151 | 1 | Cushion-Seat, Bottom |
| 4 | 131-4153 | 1 | Track ASM |
| 5 | 131-4154 | 1 | Bushing ASM |
| 6 | 131-4155 | 1 | Armrest Kit |
| 7 | 131-4156 | 1 | Shell |
| 8 | 82-2190 | 1 | Switch-Bail |
| 9 | 110-4163 | 2 | Cushion-Rest, Arm |

# Motion Control Assembly

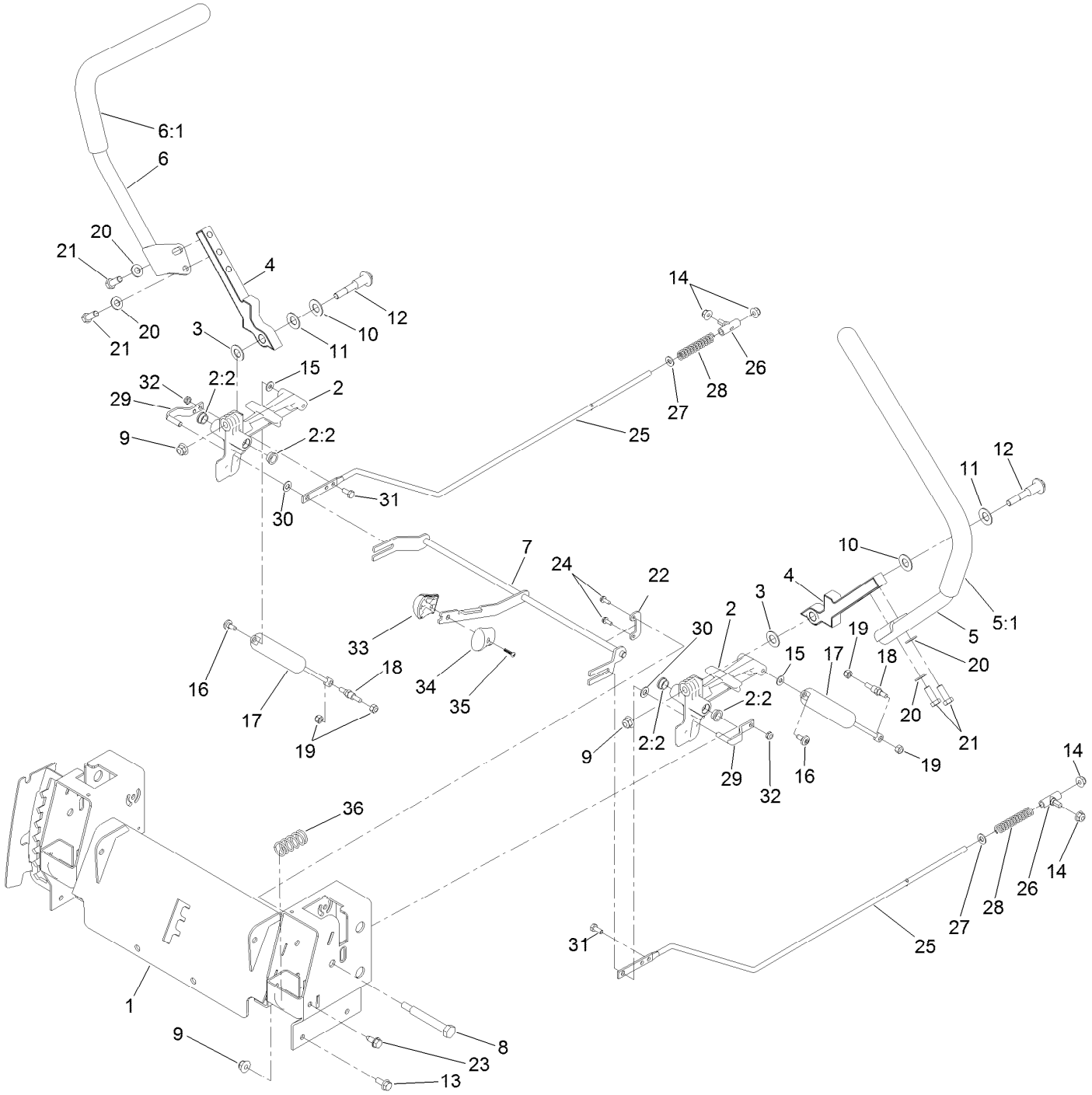

# Motion Control Assembly (continued)

| Ref. | Part Number | Qty. | Description |
|---|---|---|---|
| 1 | 136-4156-03 | 1 | Control Box ASM |
| 2 | 119-3470 | 2 | Actuator Arm ASM |
| 2:2 | 256-156 | 2 | Bushing-Flange |
| 3 | 120-2273 | 2 | Washer-Nylon |
| 4 | 115-5098-05 | 2 | Lever-Control |
| 5 | 121-0730 | 1 | Handle-Control, LH |
| 5:1 | 121-0726 | 1 | Grip |
| 6 | 121-0731 | 1 | Handle-Control, RH |
| 6:1 | 121-0726 | 1 | Grip |
| 7 | 131-1094 | 1 | Speed Control ASM |
| 8 | 115-5099 | 2 | Bolt-Pivot |
| 9 | 104-8301 | 4 | Nut-Flange, NI |
| 10 | 117-1240 | 2 | Washer |
| 11 | 119-8925 | 2 | Washer-Belleville |
| 12 | 117-1198 | 2 | Bolt-Pivot |
| 13 | 3234-47 | 6 | Screw-HHF |
| 14 | 104-8300 | 10 | Nut-Flange, NI |
| 15 | 119-8952 | 2 | Washer |
| 16 | 120-7950 | 2 | Screw-Shoulder |
| 17 | 131-0964 | 2 | Damper |
| 18 | 110-6810 | 2 | Stud-Damper |
| 19 | 3296-42 | 4 | Nut-Lock, NI |
| 20 | 3256-24 | 4 | Washer-Flat |
| 21 | 323-6 | 4 | Screw-HH |
| 22 | 117-5385 | 2 | Retainer |
| 23 | 32144-70 | 4 | Screw-HWHTF |
| 24 | 32144-1 | 4 | Screw-Taptite |
| 25 | 117-5388 | 2 | Rod-Hydro |
| 26 | 119-8842 | 2 | Mount-Rod, Hydro |
| 27 | 3256-23 | 2 | Washer-Flat |
| 28 | 1-603807 | 2 | Spring-Return, Neutral |
| 29 | 119-3303 | 2 | Pin-Rod, Hydro |
| 30 | 93-6079 | 2 | Spacer-Nylon |
| 31 | 321-3 | 2 | Screw-HH |
| 32 | 3296-56 | 2 | Nut-Lock, NI |
| 33 | 119-8935 | 1 | Knob-RH |
| 34 | 119-8936 | 1 | Knob-LH |
| 35 | 94-4496 | 1 | Screw-PPH |
| 36 | 119-8876 | 2 | Spring-Return |

# Engine and Muffler Assembly

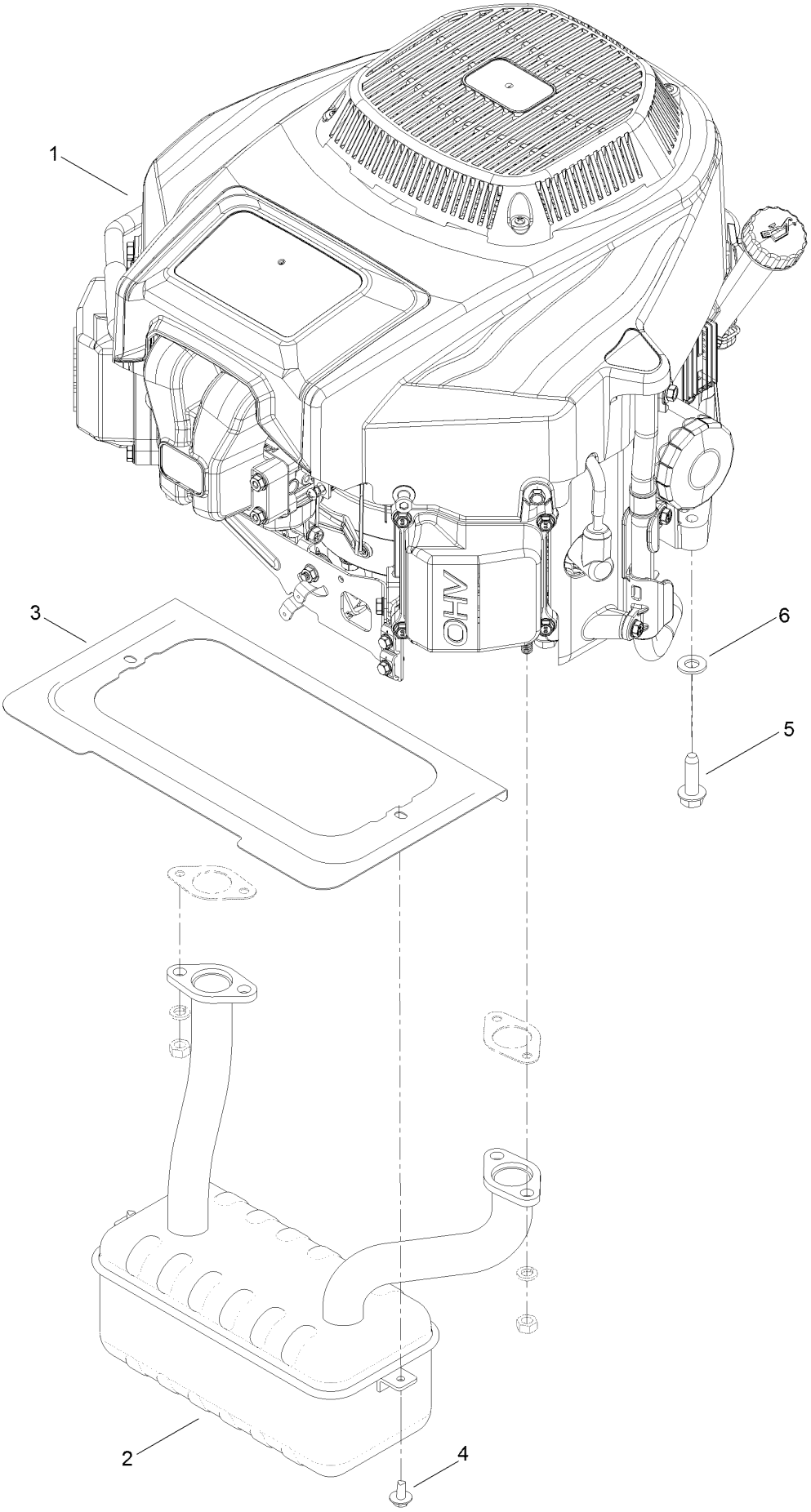

# Engine and Muffler Assembly (continued)

| Ref. | Part Number | Qty. | Description |
|---|---|---|---|
| 1 | 127-9041 | 1 | Engine-2P77F |
| 2 | 130-6851 | 1 | Muffler |
| 3 | 131-1071-03 | 1 | Shield-Heat |
| 4 | 46-8560 | 2 | Screw-HHFTF |
| 5 | 32144-109 | 4 | Screw-Taptite |
| 6 | 3256-24 | 3 | Washer-Flat |

# Fuel System Assembly

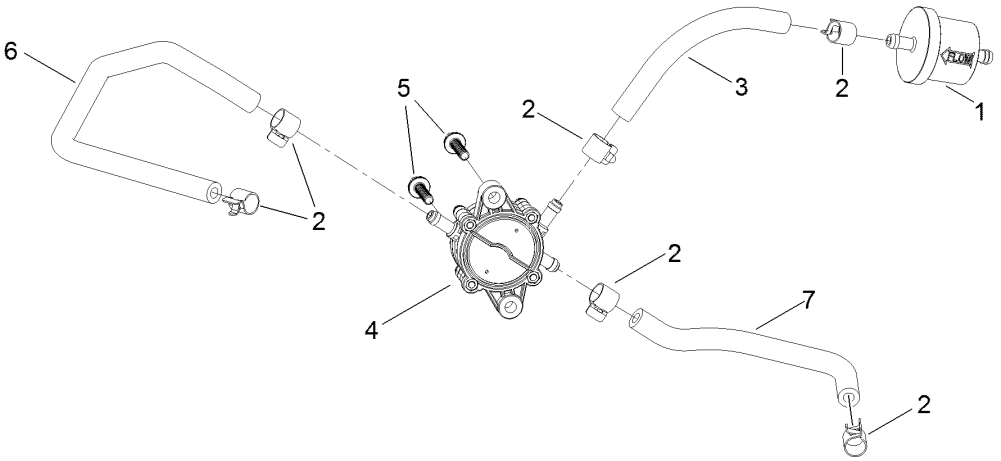


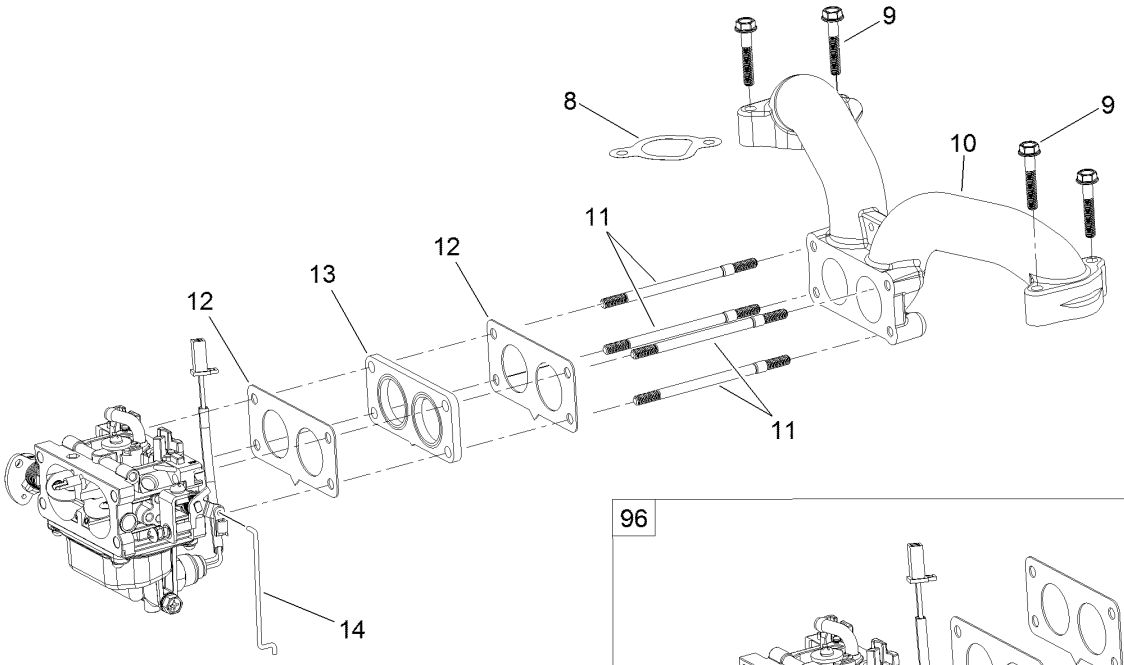


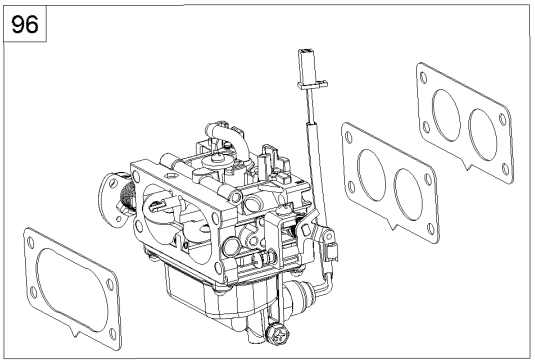


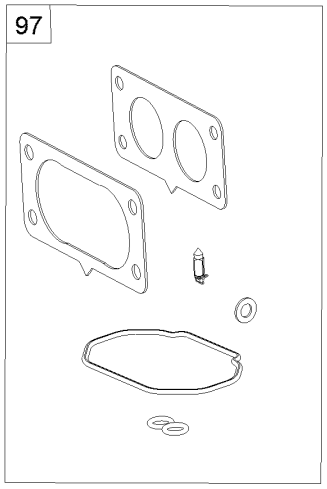


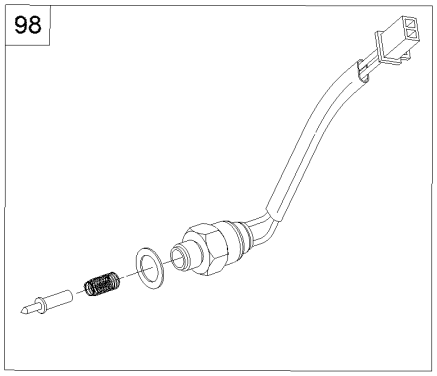

# Fuel System Assembly (continued)

| Ref. | Part Number | Qty. | Description |
|---|---|---|---|
| 1 | 133-1563 | 1 | Filter-Fuel |
| 2 | 120-4251 | 6 | Clamp-Fuel Line |
| 3 | 120-4371 | 1 | Line-Fuel |
| 4 | 127-9206 | 1 | Pump-Fuel |
| 5 | 120-4225 | 2 | Screw-HHF |
| 6 | 127-9205 | 1 | Hose-Fuel |
| 7 | 127-9207 | 1 | Hose-Fuel |
| 8 | 127-9230 | 2 | Gasket-Intake |
| 9 | 120-4284 | 4 | Screw-HHF |
| 10 | 127-9244 | 1 | Manifold-Intake |
| 11 | 127-9245 | 4 | Stud |
| 12 | 127-9246 | 2 | Gasket-Carburetor |
| 13 | 127-9247 | 1 | Insulator-Carburetor |
| 14 | 127-9248 | 1 | Linkage-Throttle |
| 96 | 127-9289 | 1 | Carburetor Replacement Kit |
| 97 | 127-9290 | 1 | Carburetor Repair Kit |
| 98 | 127-9292 | 1 | Solenoid Kit |
| 99 | 127-9303 | 1 | High Altitude Kit ● |

● Not illustrated

# Carburetor Assembly

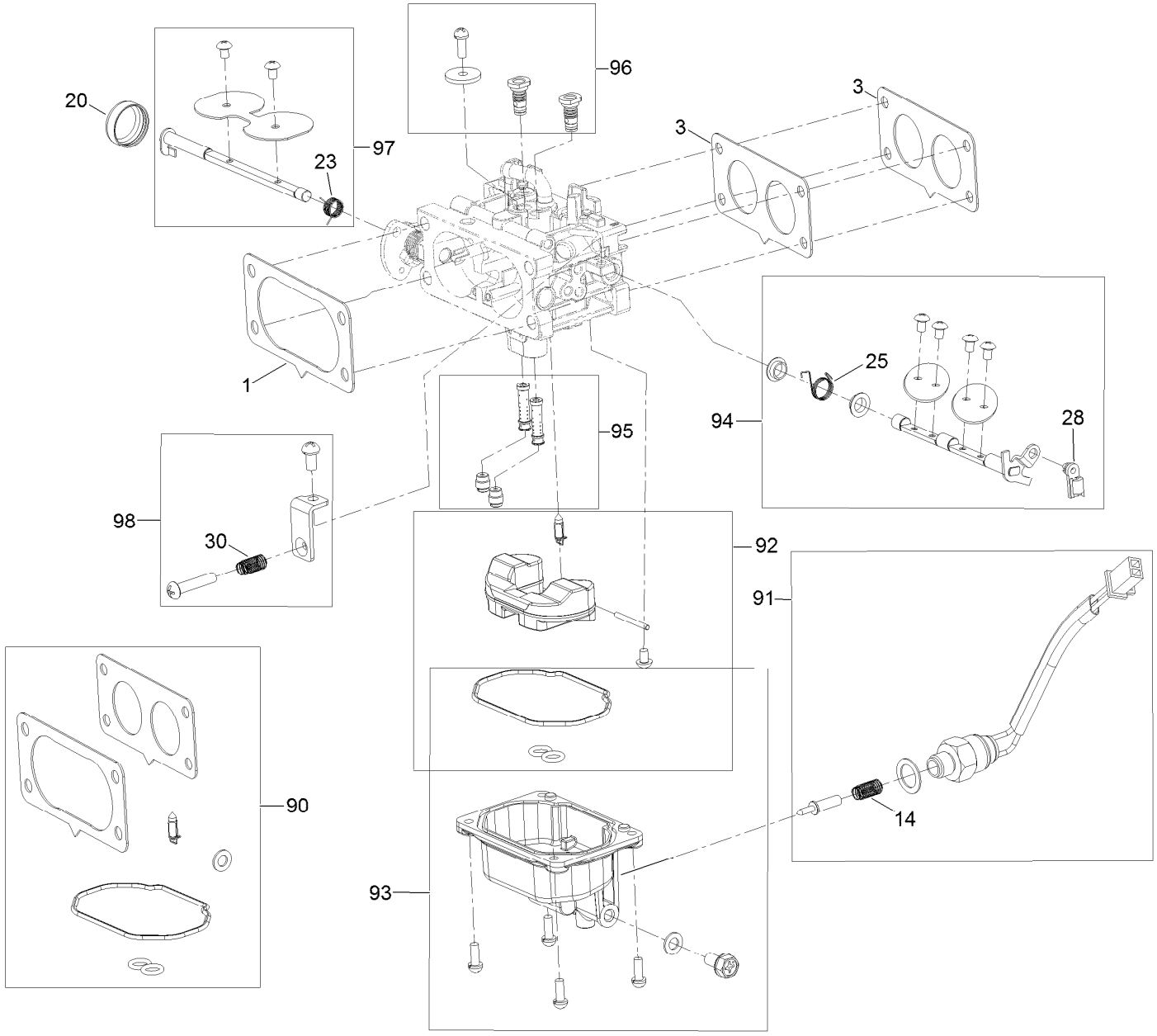

# Carburetor Assembly (continued)

| Ref. | Part Number | Qty. | Description |
|---|---|---|---|
| 1 | 127-9251 | 1 | Gasket-Carburetor |
| 3 | 127-9246 | 2 | Gasket-Carburetor |
| 14 | 127-9319 | 1 | Spring |
| 20 | 127-9325 | 1 | Cover-Shaft, Choke |
| 23 | 127-9328 | 1 | Spring |
| 25 | 127-9330 | 1 | Spring |
| 28 | 127-9333 | 1 | Clamp-Lock |
| 30 | 127-9335 | 1 | Spring |
| 90 | 127-9290 | 1 | Carburetor Repair Kit |

| Ref. | Part Number | Qty. | Description |
|---|---|---|---|
| 91 | 127-9292 | 1 | Solenoid Kit |
| 92 | 127-9340 | 1 | Float Kit |
| 93 | 127-9341 | 1 | Bowl Kit |
| 94 | 127-9342 | 1 | Throttle Shaft Kit |
| 95 | 127-9343 | 1 | Nozzle And Jet Kit |
| 96 | 127-9344 | 1 | Air Jet Kit |
| 97 | 127-9345 | 1 | Choke Shaft Kit |
| 98 | 127-9347 | 1 | Idlestop Kit |

# Air Intake and Filtration Assembly

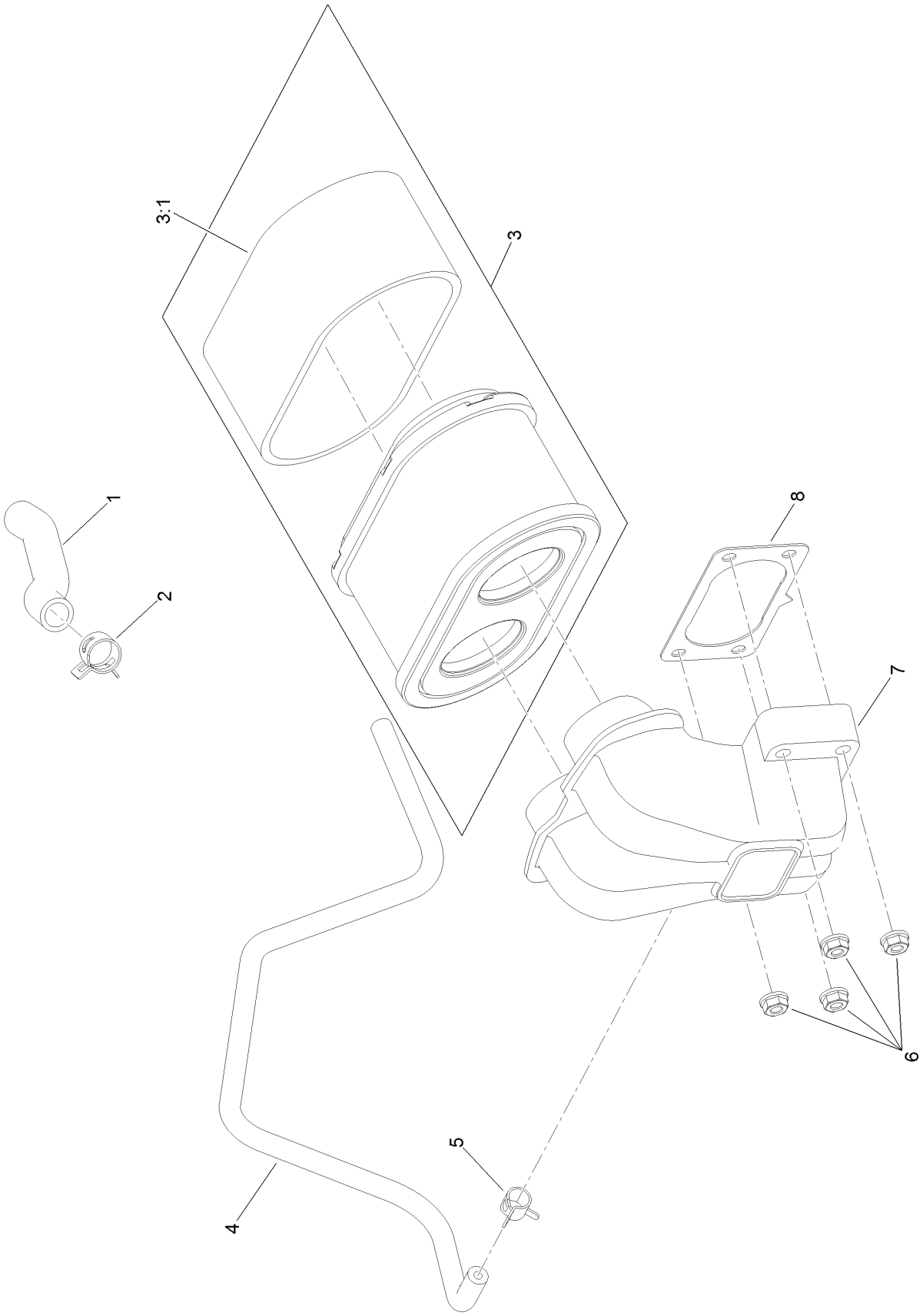

# Air Intake and Filtration Assembly (continued)

| Ref. | Part Number | Qty. | Description |
|---|---|---|---|
| 1 | 127-9235 | 1 | Tube-Breather |
| 2 | 127-9234 | 2 | Clamp-Hose |
| 3 | 127-9252 | 1 | Filter-Air, Complete |
| 3:1 | 127-9288 | 1 | Filter-Pre, Foam |
| 4 | 127-9253 | 1 | Hose-Fuel |
| 5 | 127-9187 | 1 | Clamp-Hose |
| 6 | 120-4236 | 4 | Nut-Flange |
| 7 | 127-9047 | 1 | Manifold-Filter, Air |
| 8 | 127-9251 | 1 | Gasket-Carburetor |

# Ignition and Electrical Assembly

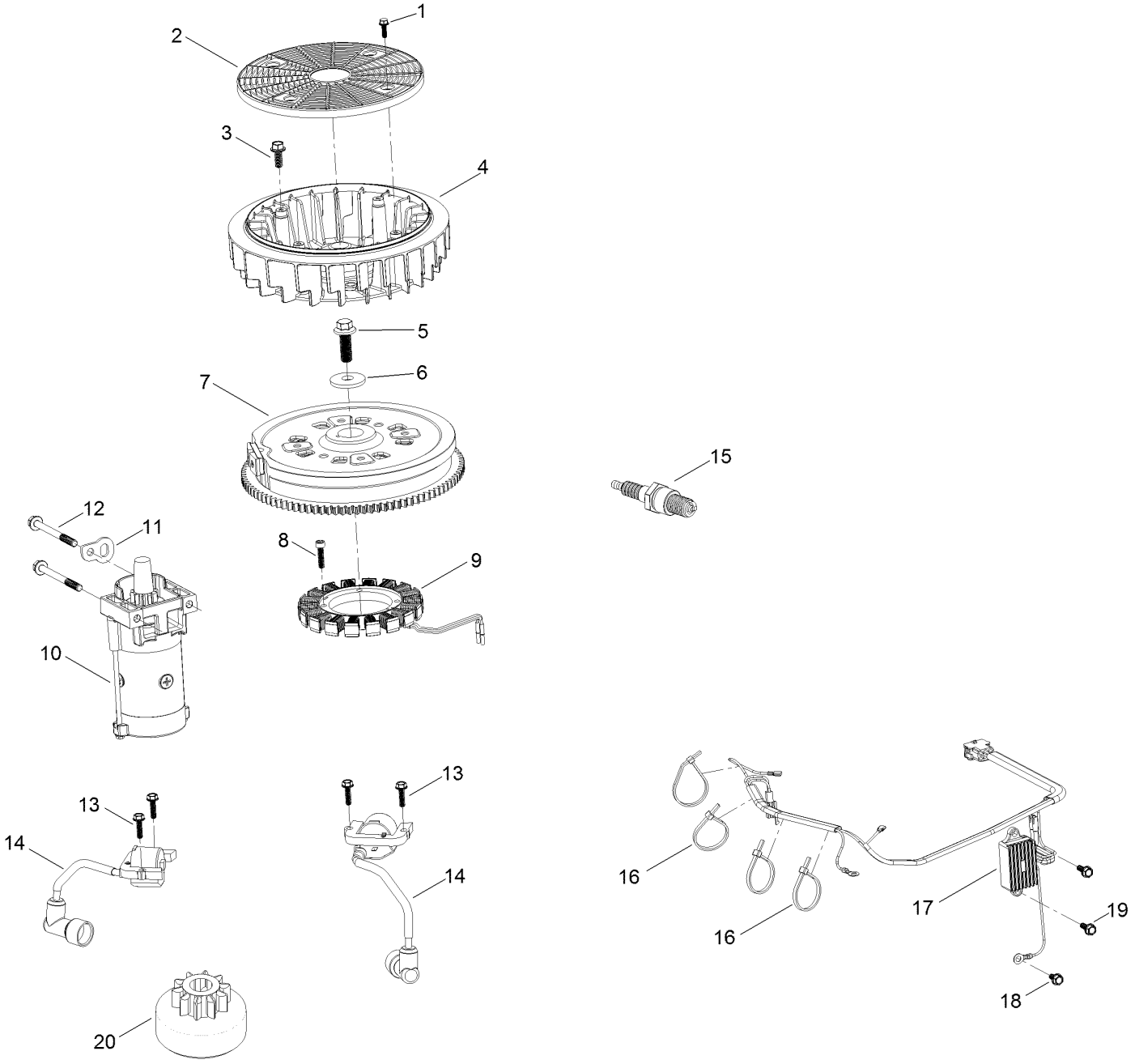


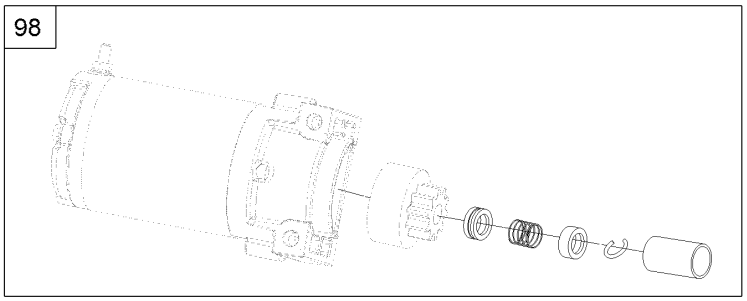

# Ignition and Electrical Assembly (continued)

| Ref. | Part Number | Qty. | Description |
|---|---|---|---|
| 1 | 127-9197 | 4 | Screw-HWH |
| 2 | 127-9198 | 1 | Screen-Rotating |
| 3 | 127-9199 | 4 | Screw-HWH |
| 4 | 127-9200 | 1 | Fan-Cooling |
| 5 | 127-9201 | 1 | Screw-HWH |
| 6 | 127-9202 | 1 | Washer-Flat |
| 7 | 127-9306 | 1 | Flywheel |
| 8 | 127-9210 | 4 | Screw-HSH |
| 9 | 127-9211 | 1 | Alternator |
| 10 | 133-9828 | 1 | Motor-Starter |
| 11 | 127-9208 | 1 | Bracket-Lift |
| 12 | 120-4231 | 2 | Screw-HHF |
| 13 | 121-0007 | 4 | Bolt-Flange |
| 14 | 127-9216 | 2 | Ignition Coil ASM |
| 15 | 81-3250 | 2 | Spark Plug |
| 16 | 127-9220 | 4 | Tie-Zip |
| 17 | 127-9219 | 1 | Regulator-Voltage W/Harness |
| 18 | 120-4216 | 1 | Screw-HHF |
| 19 | 120-4232 | 2 | Screw-HHF |
| 20 | 133-1562 | 1 | Pinion-Starter |
| 98 | 133-1566 | 1 | Starter Repair Kit |

# Crankcase and Crankshaft Assembly

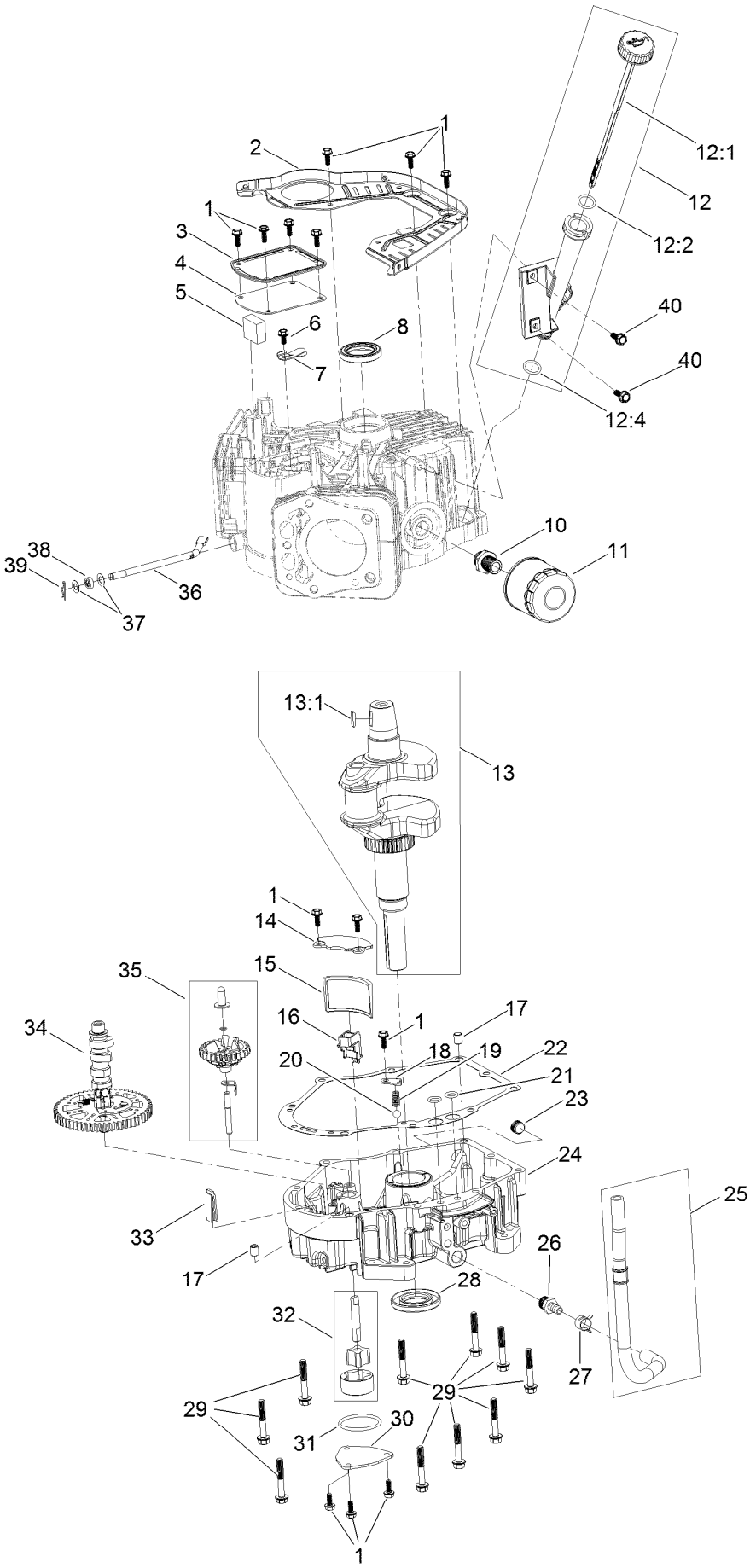

# Crankcase and Crankshaft Assembly (continued)

| Ref. | Part Number | Qty. | Description |
|---|---|---|---|
| 1 | 120-4232 | 14 | Screw-HHF |
| 2 | 127-9212 | 1 | Baffle |
| 3 | 127-9213 | 1 | Cover-Breather |
| 4 | 127-9214 | 1 | Gasket-Breather |
| 5 | 127-9215 | 1 | Filter-Breather |
| 6 | 120-4216 | 1 | Screw-HHF |
| 7 | 127-9217 | 1 | Valve-Breather |
| 8 | 120-4267 | 1 | Seal-Oil |
| 10 | 120-4346 | 1 | Adaptor-Filter, Oil |
| 11 | 120-4276 | 1 | Filter-Oil |
| 12 | 127-9218 | 1 | Oil Tube ASM |
| 12:1 | 127-9283 | 1 | Dipstick |
| 12:2 | 127-9284 | 1 | O-Ring |
| 12:4 | 127-9286 | 1 | O-Ring |
| 13 | 127-9255 | 1 | Crankshaft |
| 13:1 | 120-4320 | 1 | Key-Woodruff |
| 14 | 127-9261 | 1 | Cover-Screen, Oil |
| 15 | 127-9262 | 1 | Screen-Oil |
| 16 | 127-9263 | 1 | Retainer-Screen |
| 17 | 120-4274 | 2 | Pin-Dowel |
| 18 | 127-9264 | 1 | Plate-Retainer |
| 19 | 127-9265 | 1 | Spring |
| 20 | 127-9266 | 1 | Valve-Ball |
| 21 | 120-4262 | 2 | O-Ring |
| 22 | 127-9267 | 1 | Gasket-Cover, Crankcase |
| 23 | 133-9805 | 1 | Plug-Drain |
| 24 | 127-9268 | 1 | Cover-Crankcase |
| 25 | 127-9293 | 1 | Oil Drain Hose ASM |
| 26 | 127-9275 | 1 | Fitting-Hose |
| 27 | 127-9276 | 1 | Clamp-Hose |
| 28 | 127-9271 | 1 | Seal |
| 29 | 121-0473 | 10 | Screw-HHF |
| 30 | 127-9274 | 1 | Cover-Oil Pump |
| 31 | 127-9273 | 1 | O-Ring |
| 32 | 127-9272 | 1 | Oil Pump ASM |
| 33 | 120-4275 | 1 | Deflector-Oil, Rubber |
| 34 | 133-1568 | 1 | Camshaft |
| 35 | 133-9807 | 1 | Governor ASM |
| 36 | 127-9238 | 1 | Rod-Governor |
| 37 | 120-4258 | 2 | Washer-Plain |
| 38 | 120-4257 | 1 | Seal-Oil |
| 39 | 120-4256 | 1 | Pin-Hair |
| 40 | 120-4232 | 2 | Screw-HHF |

# Governor Control Assembly

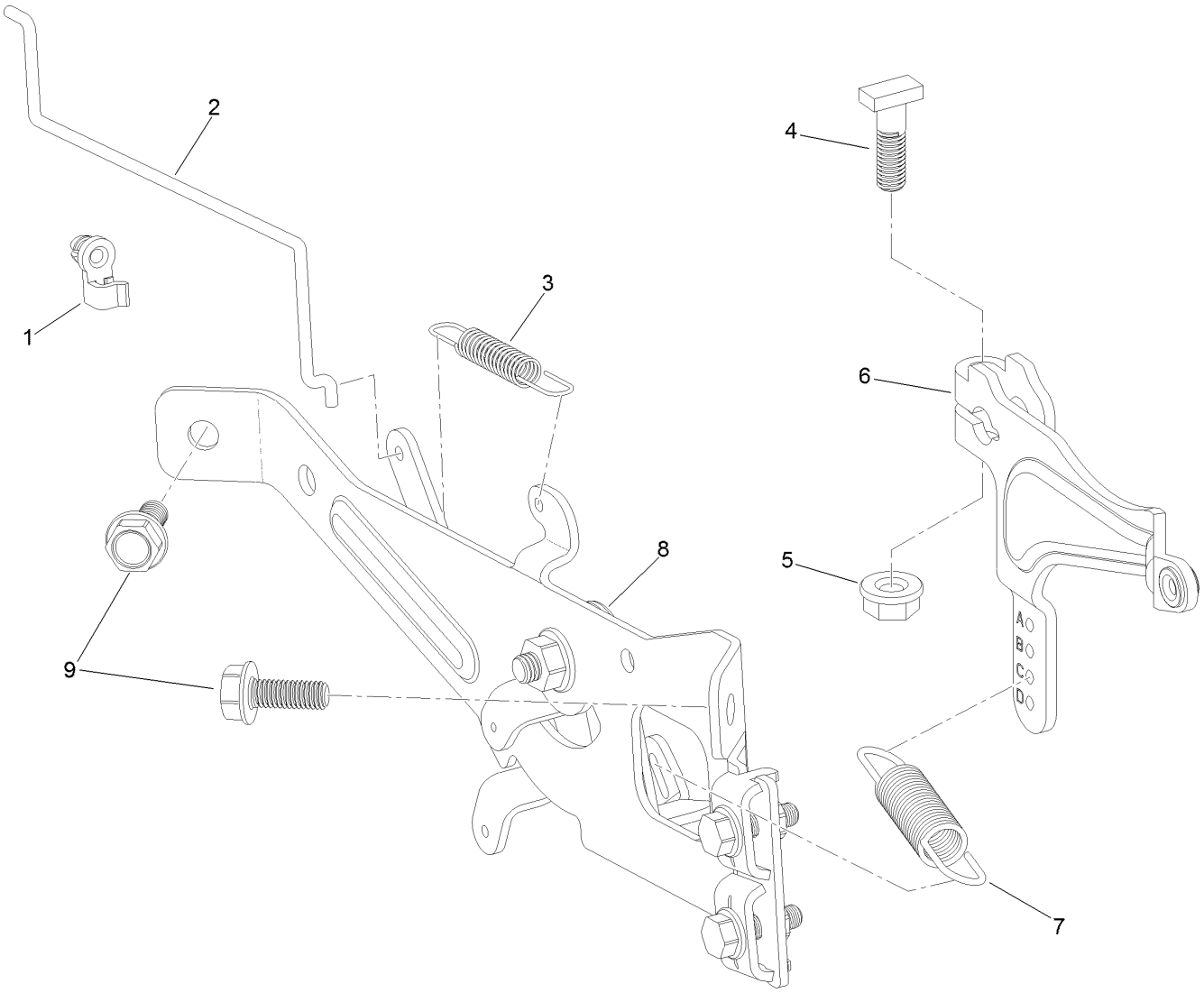

# Governor Control Assembly (continued)

| Ref. | Part Number | Qty. | Description |
|---|---|---|---|
| 1 | 127-9250 | 1 | Clip-Linkage |
| 2 | 127-9242 | 1 | Linkage-Choke |
| 3 | 127-9241 | 1 | Spring-Governor |
| 4 | 120-4238 | 1 | Bolt-Arm, Governor |
| 5 | 120-4236 | 1 | Nut-Flange |
| 6 | 127-9239 | 1 | Arm-Governor |
| 7 | 133-9809 | 1 | Spring-Governor |
| 8 | 133-1570 | 1 | Control Plate ASM |
| 9 | 120-4232 | 2 | Screw-HHF |

# Piston and Cylinder Head Assembly

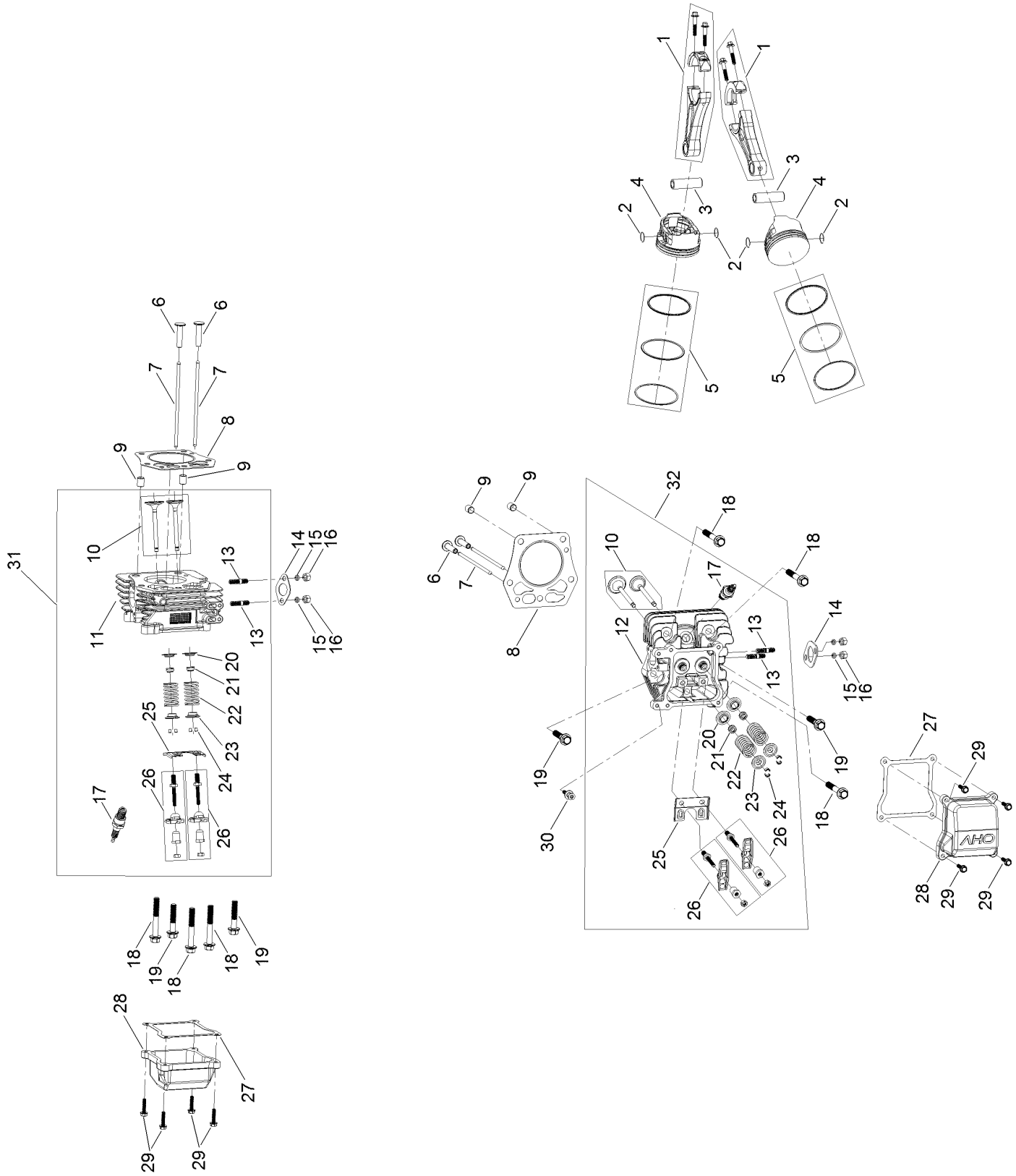

# Piston and Cylinder Head Assembly (continued)

| Ref. | Part Number | Qty. | Description |
|---|---|---|---|
| 1 | 127-9256 | 2 | Connecting Rod ASM |
| 2 | 127-9258 | 4 | Clip-Piston Pin |
| 3 | 127-9257 | 2 | Pin-Piston |
| 4 | 127-9259 | 2 | Piston |
| 5 | 127-9260 | 2 | Ring Set-Piston |
| 6 | 127-9224 | 4 | Lifter-Valve |
| 7 | 127-9225 | 4 | Rod-Push |
| 8 | 127-9226 | 2 | Gasket-Head, Cylinder |
| 9 | 127-9227 | 4 | Pin-Dowel |
| 10 | 127-9228 | 2 | Valve Set |
| 11 | 127-9229 | 1 | Head-Cylinder |
| 12 | 127-9254 | 1 | Head-Cylinder |
| 13 | 121-0464 | 4 | Stud-Exhaust |
| 14 | 120-4317 | 2 | Gasket-Exhaust |
| 15 | 127-9279 | 4 | Washer-Lock, Split |
| 16 | 121-0199 | 4 | Nut-HH |
| 17 | 81-3250 | 2 | Spark Plug |
| 18 | 127-9231 | 6 | Screw-HWH |
| 19 | 127-9232 | 4 | Screw-HWH |
| 20 | 120-4303 | 4 | Seat-Spring, Valve |
| 21 | 120-4304 | 4 | Seal-Stem, Valve |
| 22 | 120-4305 | 4 | Spring-Valve |
| 23 | 120-4306 | 4 | Retainer-Spring, Valve |
| 24 | 120-4307 | 8 | Keeper-Valve |
| 25 | 127-9233 | 2 | Plate-Push Rod, Guide |
| 26 | 127-9294 | 4 | Rocker Arm ASM |
| 27 | 127-9295 | 2 | Gasket-Valve Cover |
| 28 | 127-9050 | 2 | Cover-Valve |
| 29 | 120-4225 | 8 | Screw-HHF |
| 30 | 120-4214 | 1 | Screw-Shoulder, HH |
| 31 | 133-9819 | 1 | Complete Right Head ASM |
| 32 | 133-9820 | 1 | Complete Left Head ASM |

# Blower Housing Assembly

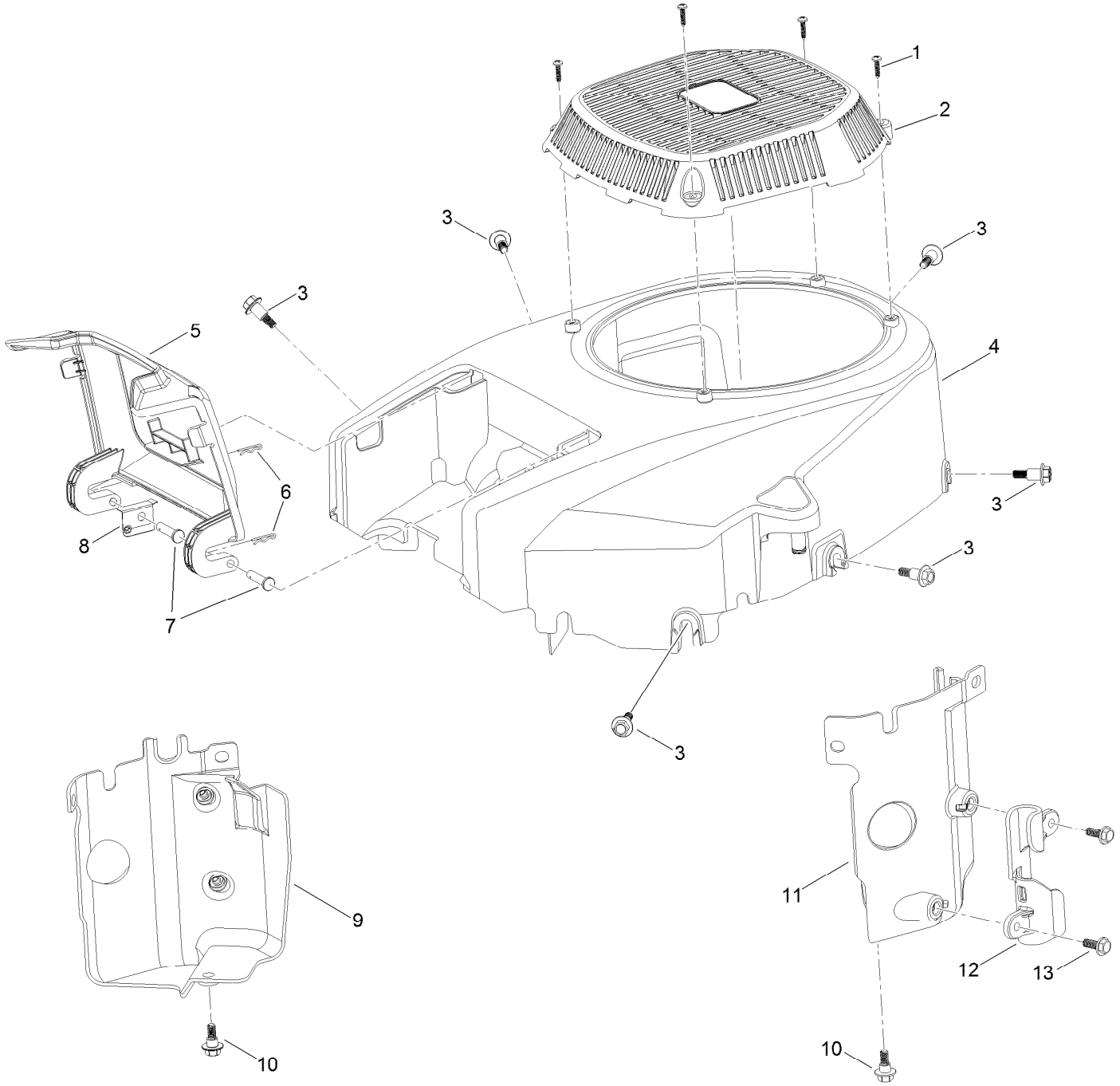

# Blower Housing Assembly (continued)

| Ref. | Part Number | Qty. | Description |
|---|---|---|---|
| 1 | 133-1571 | 4 | Screw-PPH, Plastic |
| 2 | 127-9045 | 1 | Cover-Fan |
| 3 | 127-9196 | 6 | Screw-Shoulder, HWH |
| 4 | 133-1572 | 1 | Shroud-Engine |
| 5 | 127-9046 | 1 | Door-Filter, Air |
| 6 | 127-9280 | 2 | Pin-Hair |
| 7 | 127-9282 | 2 | Pin |
| 8 | 127-9281 | 1 | Plate-Spring |
| 9 | 127-9049 | 1 | Baffle-Air, Left |
| 10 | 120-4210 | 2 | Screw-Shoulder, HHF |
| 11 | 127-9048 | 1 | Baffle-Air, Right |
| 12 | 127-9287 | 1 | Cleat-Hose |
| 13 | 120-4232 | 2 | Screw-HHF |

# Gasket and Seal Kit

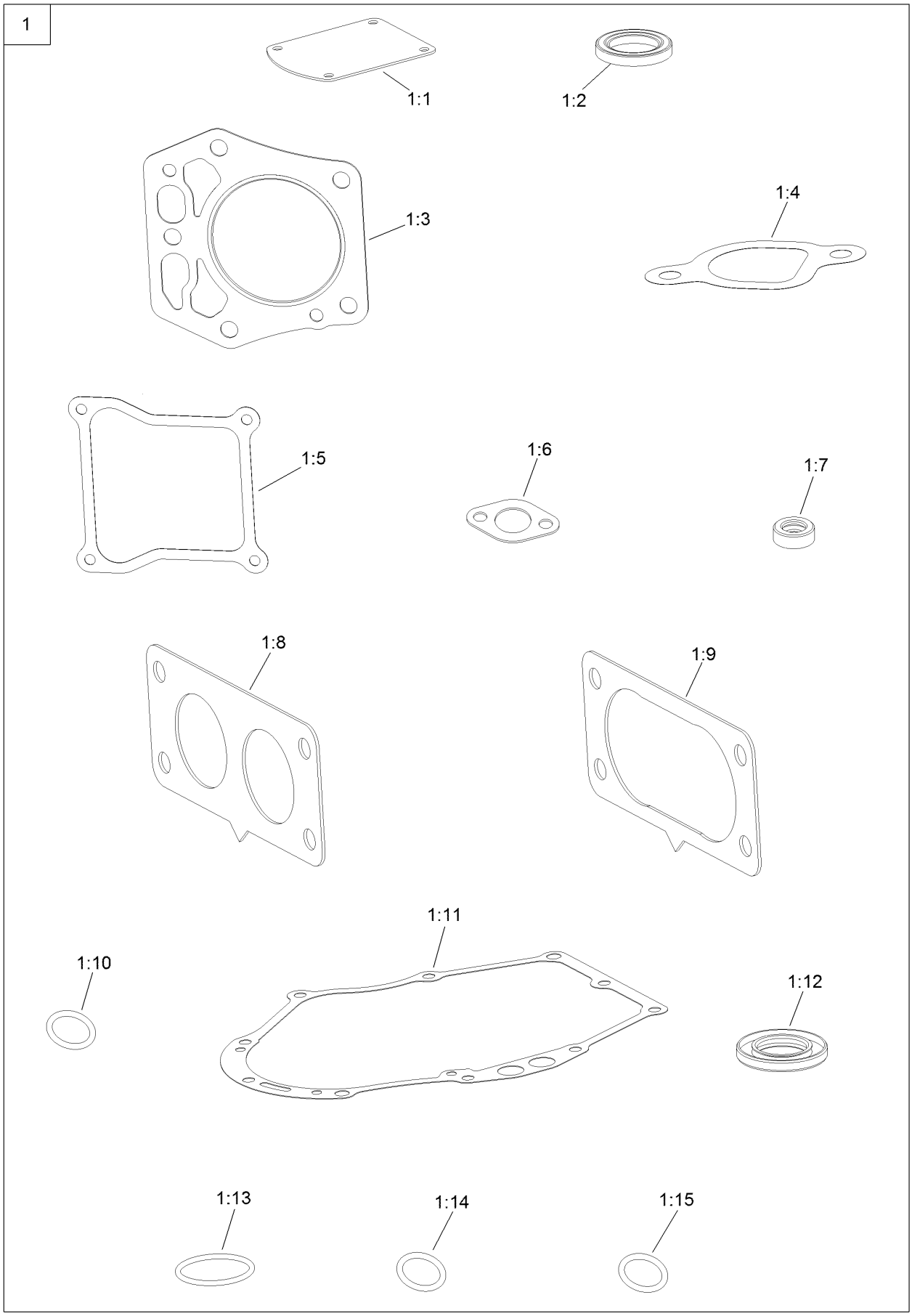

# Gasket and Seal Kit (continued)

| Ref. | Part Number | Qty. | Description |
|---|---|---|---|
| 1 | 127-9296 | 1 | Gasket And Seal Kit |
| 1:1 | 127-9214 | 1 | Gasket-Breather |
| 1:2 | 120-4267 | 1 | Seal-Oil |
| 1:3 | 127-9226 | 2 | Gasket-Head, Cylinder |
| 1:4 | 127-9230 | 2 | Gasket-Intake |
| 1:5 | 127-9295 | 2 | Gasket-Valve Cover |
| 1:6 | 120-4317 | 2 | Gasket-Exhaust |
| 1:7 | 120-4257 | 1 | Seal-Oil |
| 1:8 | 127-9246 | 2 | Gasket-Carburetor |
| 1:9 | 127-9251 | 1 | Gasket-Carburetor |
| 1:10 | 120-4262 | 2 | O-Ring |
| 1:11 | 127-9267 | 1 | Gasket-Cover, Crankcase |
| 1:12 | 127-9271 | 1 | Seal |
| 1:13 | 127-9273 | 1 | O-Ring |
| 1:14 | 127-9284 | 1 | O-Ring |
| 1:15 | 127-9286 | 1 | O-Ring |

# Body Styling and Fuel Tank Assembly

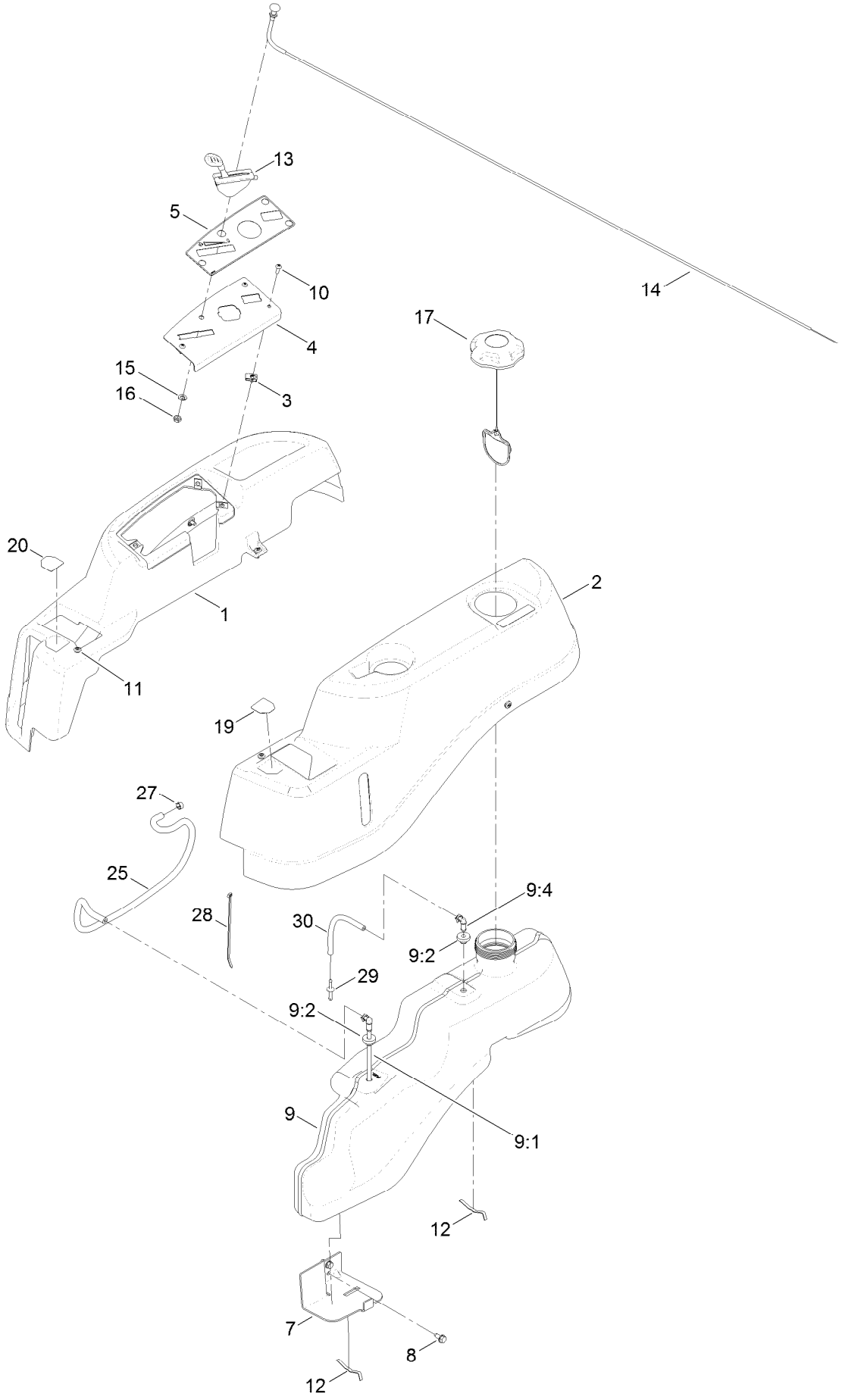

# Body Styling and Fuel Tank Assembly (continued)

| Ref. | Part Number | Qty. | Description |
|---|---|---|---|
| 1 | 119-3335 | 1 | Pod-RH |
| 2 | 119-3334 | 1 | Pod-LH |
| 3 | 107069 | 3 | Clip |
| 4 | 119-3378-03 | 1 | Plate-Control |
| 5 | 121-0772 | 1 | Decal-Panel, Control |
| 7 | 119-3476-03 | 1 | Support-Tank, Front |
| 8 | 32144-70 | 2 | Screw-HWHTF |
| 9 | 119-3324 | 1 | Fuel Tank ASM |
| 9:1 | 121-0793 | 1 | Connector-Elbow, 90 DEG |
| 9:2 | 46-6560 | 2 | Bushing |
| 9:4 | 117-7400 | 1 | Fitting-Plastic |
| 10 | 3258-166 | 3 | Screw-PRH |
| 11 | 120-7950 | 6 | Screw-Shoulder |
| 12 | 609830 | 2 | Spring |
| 13 | 121-0769 | 1 | Cable-Throttle |
| 14 | 112-9753 | 1 | Cable-Choke |
| 15 | 3253-21 | 1 | Washer-Lock |
| 16 | 3220-3 | 1 | Nut-HJ |
| 17 | 120-5461 | 1 | Cap-Fuel, Ratcheting |
| 19 | 119-8814 | 1 | Decal-Control Lever, LH |
| 20 | 119-8815 | 1 | Decal-Control Lever, RH |
| 25 | 109-0281 | 1 | Hose-Fuel |
| 27 | 2412-98 | 3 | Clamp-Hose |
| 28 | 614249 | 1 | Tie-Cable |
| 29 | 117-5399 | 1 | Adaptor-Orifice |
| 30 | 110-1876 | 1 | Hose-Fuel |

# Battery and Electrical Assembly

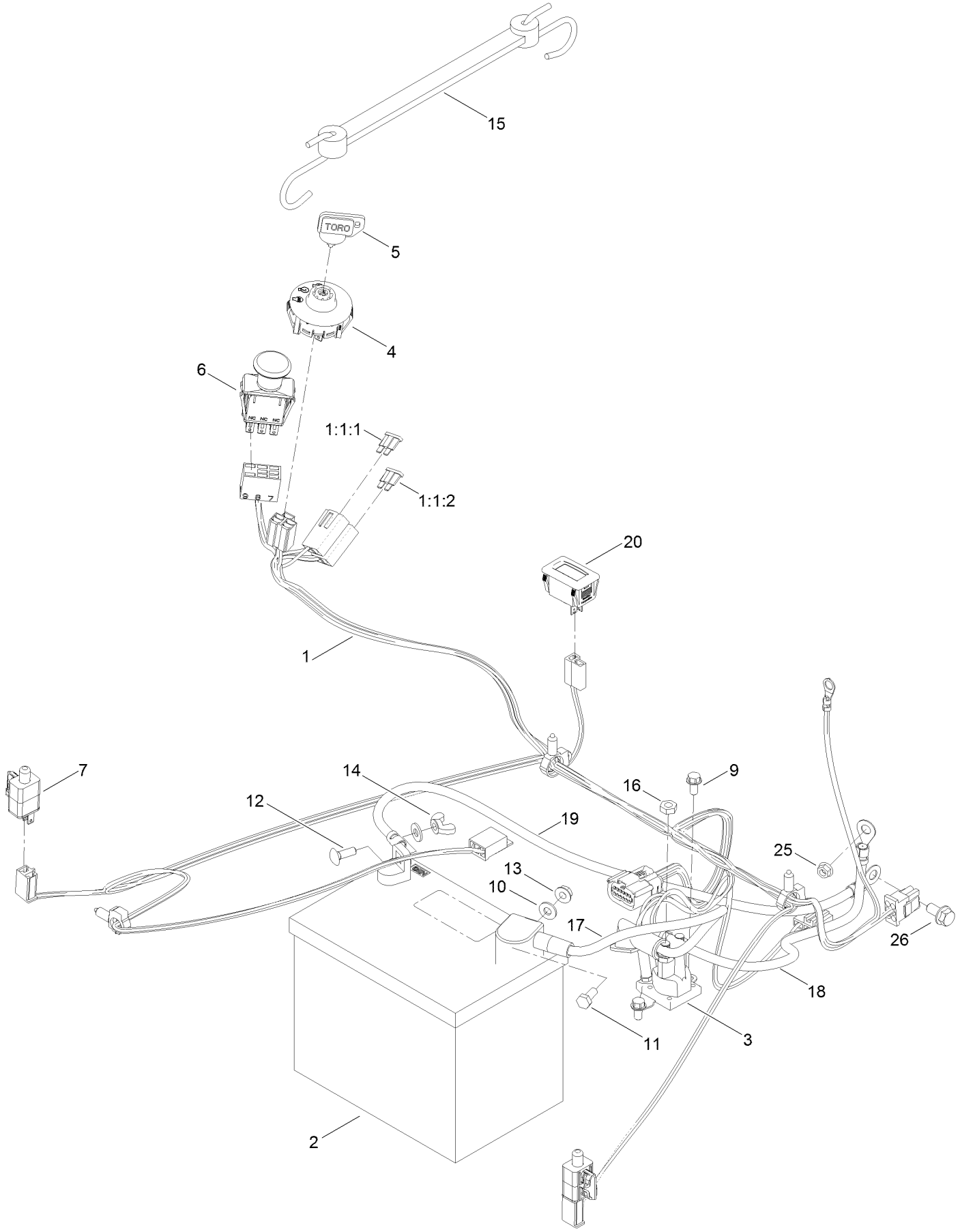

# Battery and Electrical Assembly (continued)

| Ref. | Part Number | Qty. | Description |
|---|---|---|---|
| 1 | 136-7482 | 1 | Harness-Wire |
| 1:1:1 | 109103 | 1 | Fuse-Blade, 30 Amp |
| 1:1:2 | 109102 | 1 | Fuse-Blade, 25 Amp |
| 2 | 105-1692 | 1 | Battery-Dry |
| 3 | 117-1197 | 1 | Solenoid |
| 4 | 117-2221 | 1 | Switch-Ignition |
| 5 | 63-8360 | 1 | Key-Ignition |
| 6 | 103-5221 | 1 | Switch-PTO |
| 7 | 110-6765 | 2 | Switch |
| 9 | 32144-4 | 2 | Screw-HWH |
| 10 | 3256-22 | 2 | Washer-Flat |
| 11 | 321-3 | 1 | Screw-HH |
| 12 | 3229-1 | 1 | Bolt-CARR |
| 13 | 32128-33 | 1 | Nut-HF |
| 14 | 32103-22 | 1 | Nut-Wing |
| 15 | 104-2466 | 1 | Holddown-Battery |
| 16 | 3220-2 | 2 | Nut-Jam |
| 17 | 119-8897 | 1 | Cable-Battery, Red |
| 18 | 121-0711 | 1 | Cable-Battery, Positive |
| 19 | 119-8899 | 1 | Cable-Battery, Black |
| 20 | 120-2244 | 1 | Hourmeter |
| 25 | 33003-00 | 1 | Nut-HF |
| 26 | 3234-14 | 1 | Screw-HHF |

# Deck Assembly

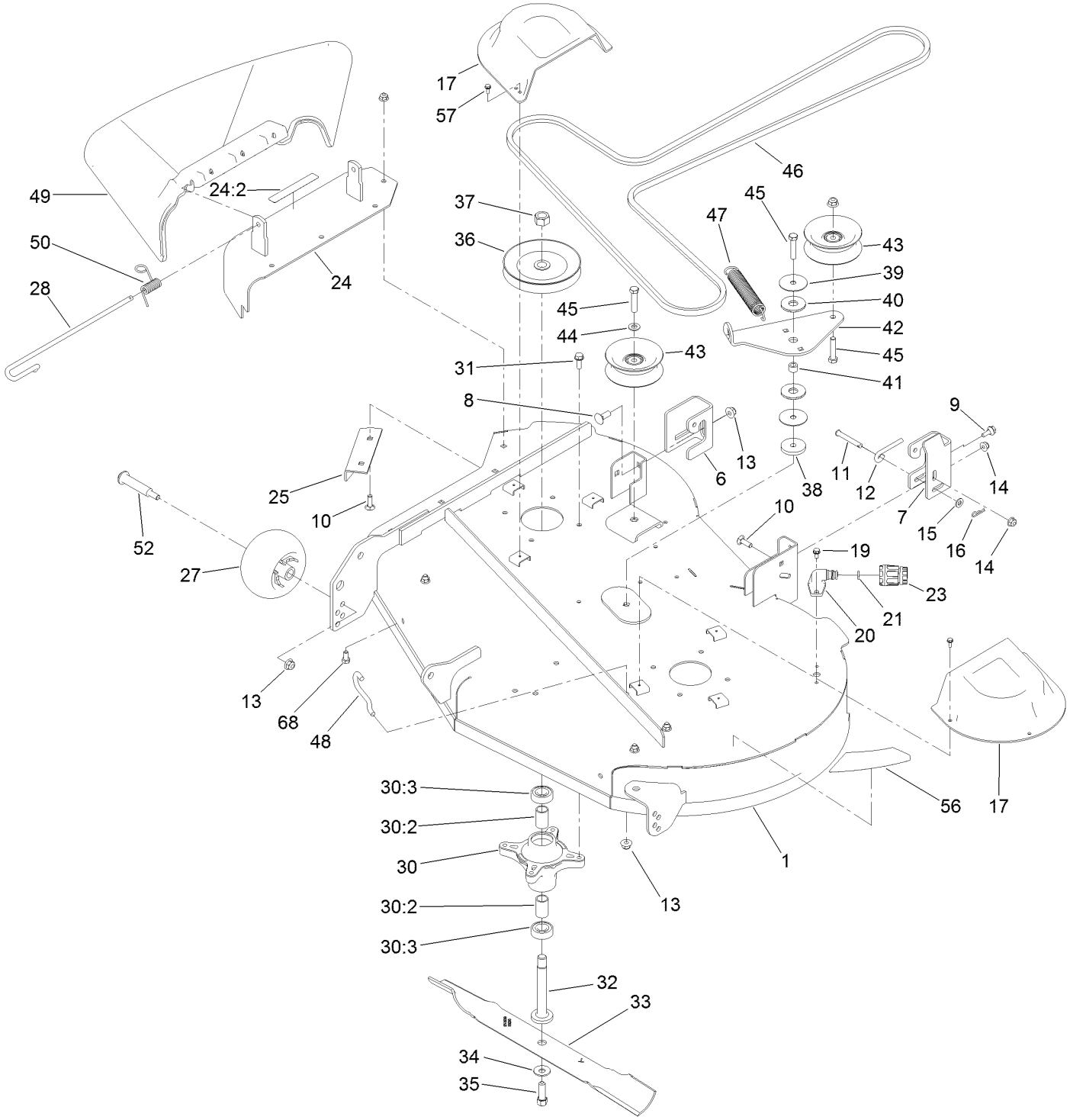

# Deck Assembly (continued)

| Ref. | Part Number | Qty. | Description |
|---|---|---|---|
| 1 | 131-3610 | 1 | 42In Deck ASM |
| 6 | 131-4138 | 1 | Bracket-Hanger, RH |
| 7 | 131-1091 | 1 | Bracket-Hanger, LH |
| 8 | 3231-2 | 2 | Bolt-CARR |
| 9 | 120-7024 | 1 | Screw-Shoulder, HHF |
| 10 | 3230-22 | 5 | Screw-CARR |
| 11 | 110-0618 | 1 | Pin-Clevis |
| 12 | 131-0955 | 1 | Rod-Level, Deck |
| 13 | 104-8301 | 6 | Nut-Flange, NI |
| 14 | 104-8300 | 9 | Nut-Flange, NI |
| 15 | 3256-23 | 1 | Washer-Flat |
| 16 | 1-806003 | 1 | Pin-Cotter |
| 17 | 108-7889 | 2 | Cover-Belt |
| 19 | 32144-4 | 2 | Screw-HWH |
| 20 | 95-2747 | 1 | Fitting-Washout |
| 21 | 46-6290 | 1 | O-Ring |
| 23 | 95-3270 | 1 | Connector-Hose |
| 24 | 131-3961 | 1 | Cover ASM W/Decal |
| 24:2 | 93-7009 | 1 | Decal-Danger |
| 25 | 120-7951-03 | 1 | Baffle-Cutoff |
| 27 | 1-603299 | 2 | Roller-Scalp, Anti |
| 28 | 109-8854 | 1 | Pin-Chute |
| 30 | 121-0751 | 2 | Spindle ASM |
| 30:2 | 120-7935 | 2 | Spacer |
| 30:3 | 38-7820 | 2 | Bearing-Ball |

| Ref. | Part Number | Qty. | Description |
|---|---|---|---|
| 31 | 32144-41 | 8 | Screw-Taptite |
| 32 | 117-7268 | 2 | Shaft-Spindle |
| 33 | 131-3939-03 | 2 | Blade-High Lift |
| 34 | 3290-465 | 2 | Washer-Belleville |
| 35 | 26-0671 | 2 | Screw-HH |
| 36 | 125-5574 | 2 | Pulley |
| 37 | 3219-6 | 2 | Nut-Hex |
| 38 | 110-9981 | 1 | Washer-Plain |
| 39 | 120-2229 | 2 | Washer |
| 40 | 114-0463 | 2 | Washer-Friction, Composite |
| 41 | 115-4986 | 1 | Spacer |
| 42 | 114-8540 | 1 | Arm-Idler |
| 43 | 106-2175 | 2 | Pulley-Idler, Flat |
| 44 | 3256-24 | 1 | Washer-Flat |
| 45 | 323-9 | 3 | Screw-HH |
| 46 | 119-8819 | 1 | V-Belt |
| 47 | 106-2177 | 1 | Spring-Extension |
| 48 | 88-5970 | 1 | Hook-Return, Spring |
| 49 | 121-0739 | 1 | Deflector-Discharge |
| 50 | 121-2983 | 1 | Spring-Torsion |
| 52 | 112-3977 | 2 | Bolt-Shoulder |
| 56 | 121-0791 | 1 | Decal-Deck |
| 57 | 32144-1 | 6 | Screw-Taptite |
| 68 | 322-2 | 3 | Screw-HH |

# 42 Inch Deck and
# Decal Assembly No. 131-3610

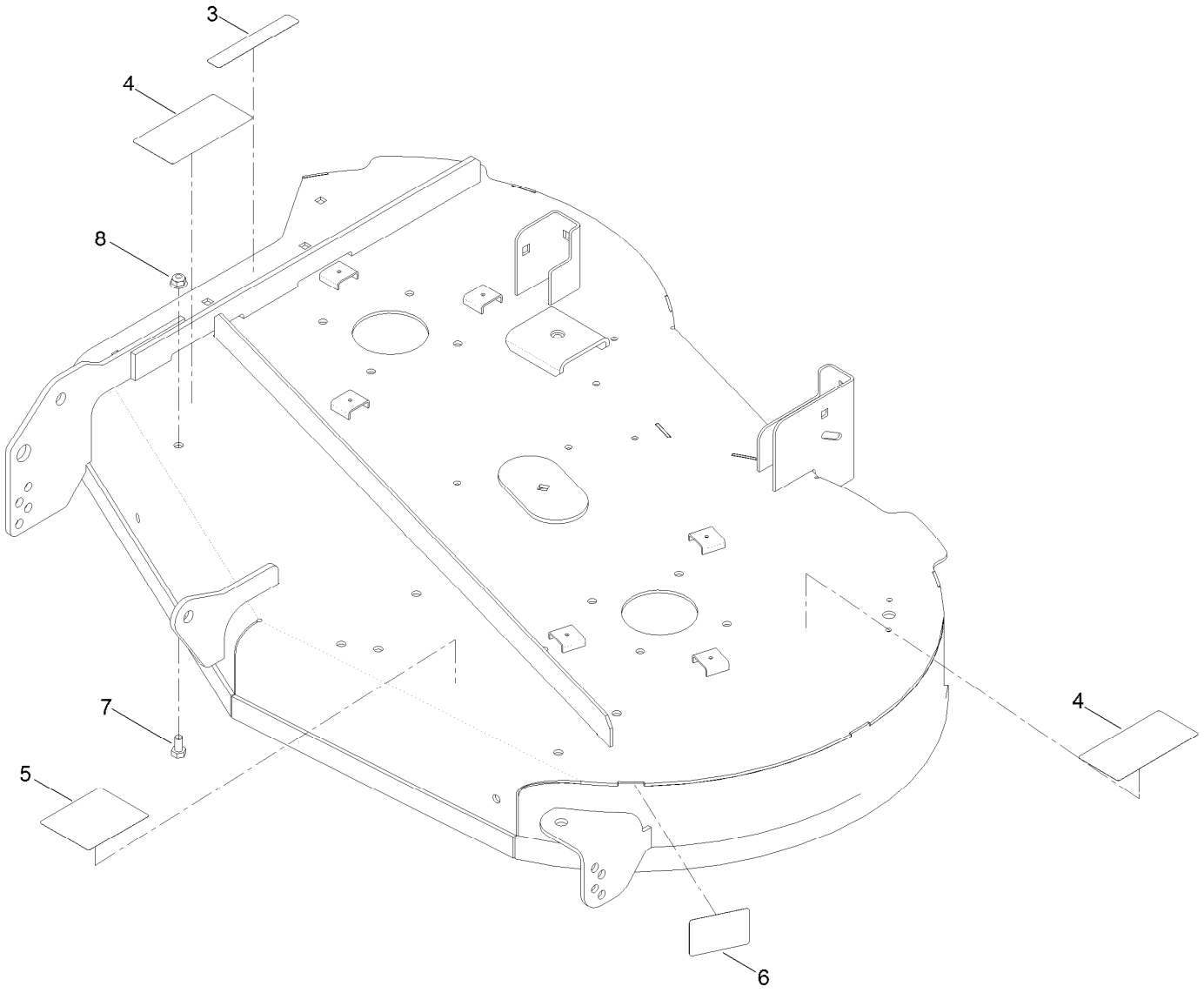

# 42 Inch Deck and Decal Assembly No. 131-3610 (continued)

| Ref. | Part Number | Qty. | Description |
|---|---|---|---|
| 3 | 93-7009 | 1 | Decal-Danger |
| 4 | 132-0872 | 2 | Decal-Danger, Deck |
| 5 | 105-7015 | 1 | Decal-Routing, Belt |
| 6 | 112-9840 | 1 | Decal-Scalp, Anti |
| 7 | 322-2 | 3 | Screw-HH |
| 8 | 104-8300 | 3 | Nut-Flange, NI |

# Model-Specific Decal and Floor-Mat Assembly

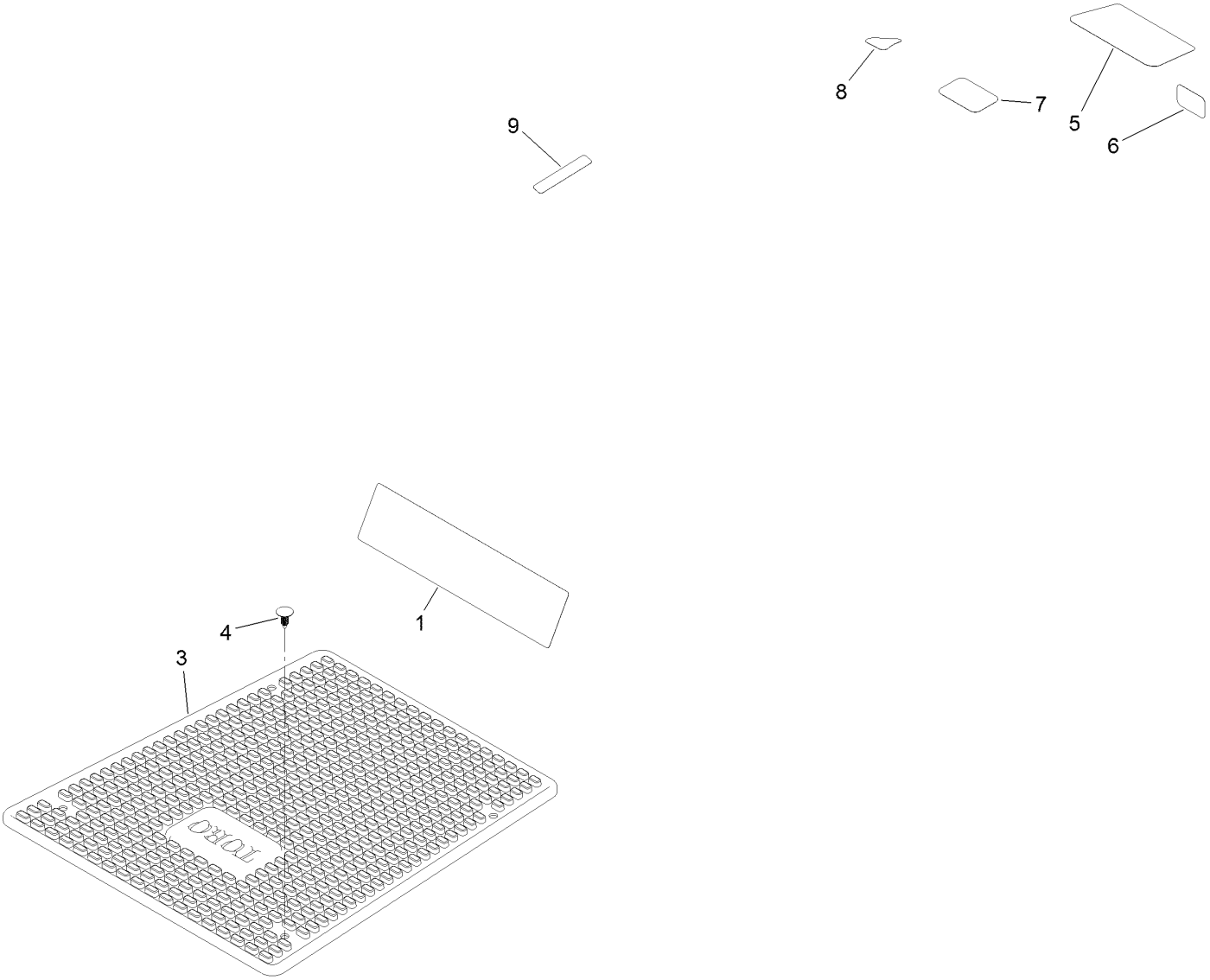

# Model-Specific Decal and Floor-Mat Assembly (continued)

| Ref. | Part Number | Qty. | Description |
|---|---|---|---|
| 1 | 131-3654 | 1 | Decal-Timecutter |
| 3 | 132-6895 | 1 | Mat-Floor |
| 4 | 117-2382 | 4 | Plug-Plastic |
| 5 | 136-5597 | 1 | Decal-Engine |
| 6 | 127-9076 | 1 | Placard-Intake |
| 7 | 131-4157 | 1 | Decal |
| 8 | 131-1097 | 1 | Decal-Drain, Oil |
| 9 | 132-0904 | 1 | Decal-Shutdown |

# Speed Control Decal, HOC Decal and Service Decal Assembly

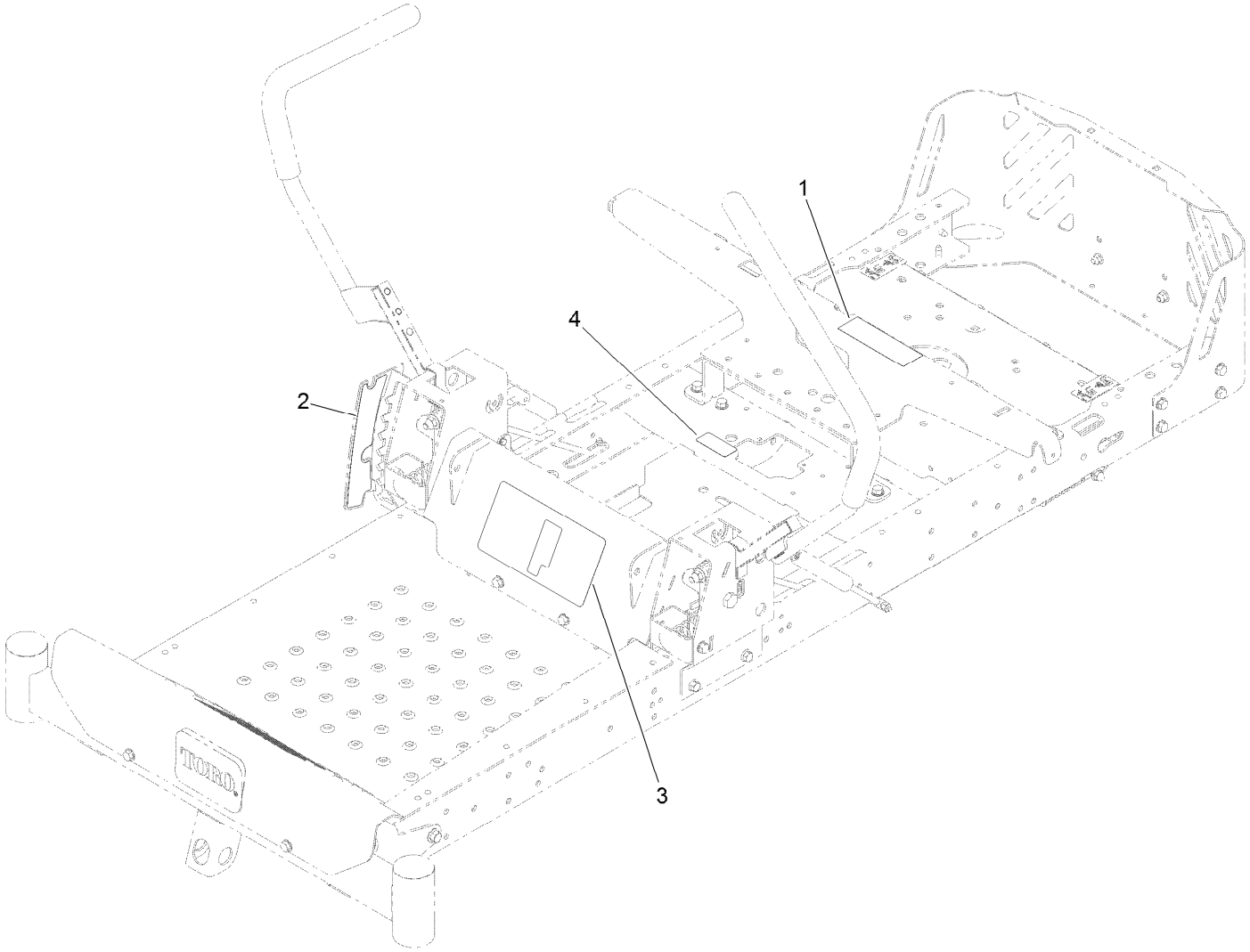

# Speed Control Decal, HOC Decal and Service Decal Assembly (continued)

| Ref. | Part Number | Qty. | Description |
|---|---|---|---|
| 1 | 106-8717 | 1 | Decal-Service |
| 2 | 119-8871 | 1 | Decal-HOC |
| 3 | 131-3947 | 1 | Decal-Control, Speed |
| 4 | 121-5684 | 1 | Decal-Location, Service Dealer |

# Clutch Assembly

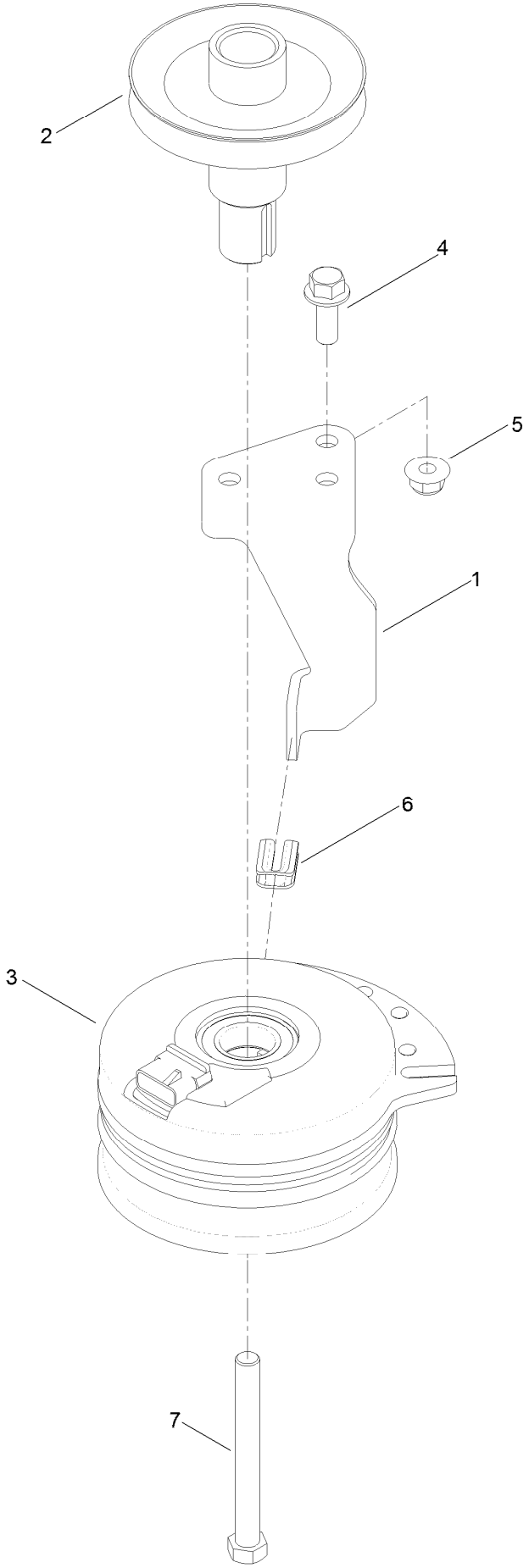

# Clutch Assembly (continued)

| Ref. | Part Number | Qty. | Description |
|---|---|---|---|
| 1 | 119-8884 | 1 | Stop-Clutch |
| 2 | 130-6854 | 1 | Pulley-Engine |
| 3 | 117-7468 | 1 | Clutch-Electric |
| 4 | 3234-42 | 1 | Screw-HHF |
| 5 | 104-8301 | 1 | Nut-Flange, NI |
| 6 | 120-2217 | 1 | Isolator-Clutch |
| 7 | 3212-16 | 1 | Screw-HH |

# Attachments and Accessories

## For 74760 TimeCutter MX 4250 Riding Mower

| Product Name | Model/Part |
|---|---|
| All Season Synthetic Oil | 117-0066 |
| Fuel Stabilizer (4oz) | 117-0089 |
| Fuel Stabilizer (16oz) | 117-0090 |
| Seat Cover w/Arm Rest | 117-0097 |
| Bagging Enhancement Kit | 121-5698 |
| Striping Kit | 121-5702 |
| Jack Mount Kit | 126-5251 |
| Jack Kit | 127-6666 |
| Replacement Blade Kit | 131-3939-03P |
| Attachment Mount Kit | 131-3966 |
| 42in Recycler Kit | 131-4183 |
| Weight Kit | 131-7658 |
| Seat ASM | 136-5598 |
| 10w30 4-cycle Engine Oil (32oz Bottle) | 38280 |
| Toro 4-cycle Sae 30 Oil (32oz Bottle) | 38903 |
| Storage Cover | 490-7516 |
| Sunshade Kit | 79011 |
| Cargo Carrier | 79040 |
| Assist Handle and Step Kit | 79339 |
| 42in Bagger | 79394 |

**Notes:**

**Notes:**

**Notes:**

TORO®

Count on it.