Form No. 3408-706 Rev A

Seal Kit

Greensmaster® 800/1000/1010/1600/1610 Groomer Drive System

Model No. 136-7200

Installation Instructions

Note: Determine the left and right sides of the machine from the normal operating position.

Loose Parts

Use the chart below to verify that all parts have been shipped.

Procedure	Description	Qty.	Use
1	No parts required	–	Prepare the left side of the machine.
2	Gasket O-ring Spacer	1 1 2	Install the left side of the kit.
3	No parts required	–	Prepare the right side of the machine.
4	Spacer	2	Install the right side of the kit.

1

Preparing the Left Side of the Machine

No Parts Required

Procedure

1. If the reel is attached to a traction unit, shut off the engine, engage the parking brake, remove the key from the ignition, and secure the machine before installing the kit.
2. Remove the groomer reel; refer to your groomer drive system *Operator's Manual*.
3. Remove the groomer-housing cover and gasket (Figure 1).

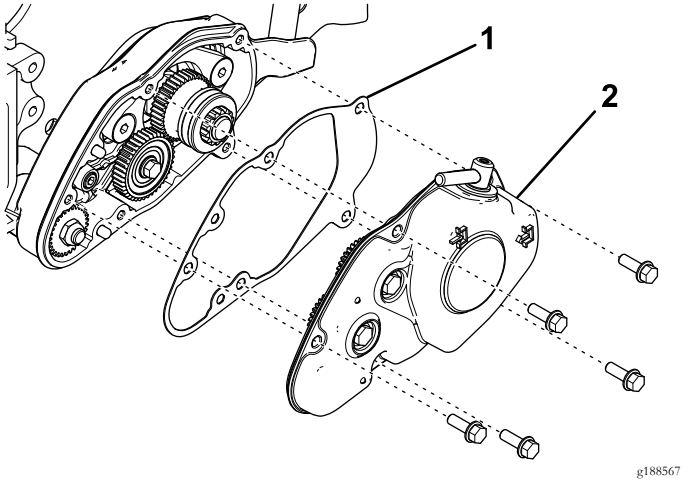

Figure 1

1. Gasket
2. Groomer-housing cover

4. Remove the 40 tooth idler gear (Figure 2).

© 2016—The Toro® Company
8111 Lyndale Avenue South
Bloomington, MN 55420

Register at www.Toro.com.

CE

Original Instructions (EN)
Printed in the USA
All Rights Reserved

3408-706 A

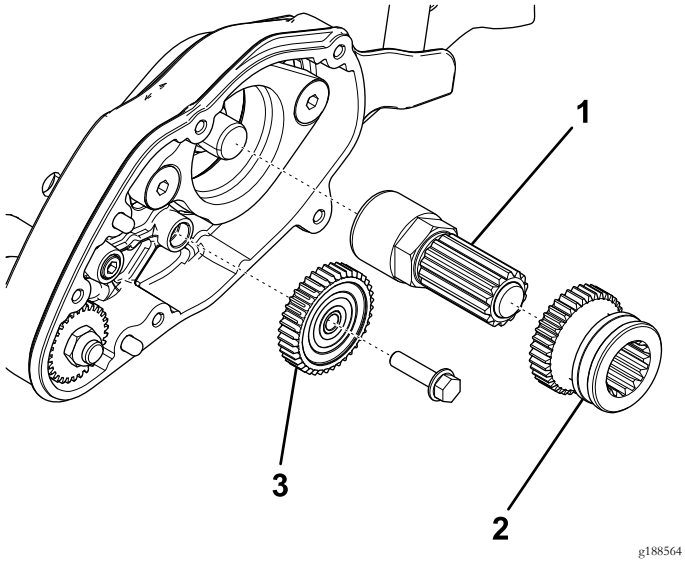

Figure 2

1. Shaft assembly
2. Drive gear
3. 40 tooth idler gear

5. Remove the drive gear and shaft assembly from the reel-shaft extension (Figure 2).
6. Remove the bolt and washer securing the adjustment knob to the side plate (Figure 3).

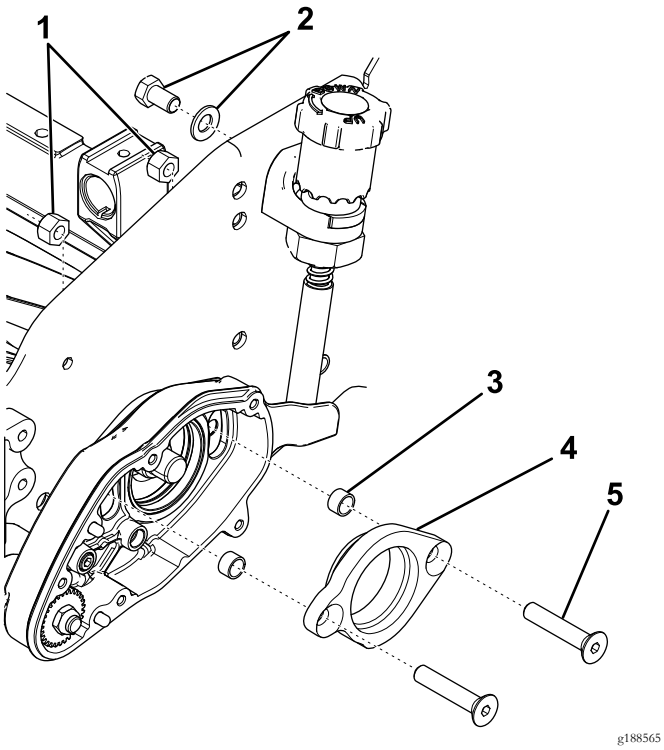

Figure 3

1. Locknuts
2. Adjustment knob fasteners
3. Spacer
4. Bearing adapter
5. Flat-head screw

7. Remove the flat-head screws, locknuts, and bearing adapter from the groomer housing (Figure 3).
8. Remove and discard the spacers (Figure 3).
9. Remove the groomer housing (Figure 4).

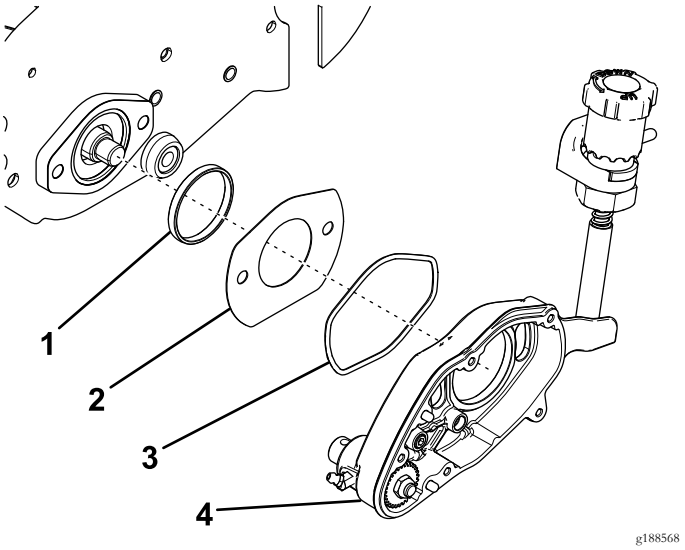

Figure 4

1. Adapter ring
2. Slot cover
3. O-ring
4. Groomer housing

10. Remove and discard the O-ring (Figure 4).
11. Remove the slot cover and adapter ring (Figure 4).

2

Installing the Left Side of the Kit

Parts needed for this procedure:

1	Gasket
1	O-ring
2	Spacer

Procedure

1. Install the new O-ring into the back of the groomer housing, and lightly lubricate the exposed surfaces of the O-ring with synthetic grease (Figure 5).

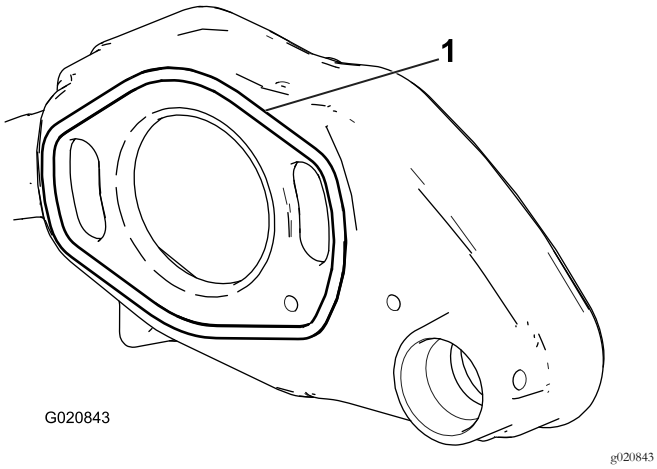

Figure 5

1. O-ring

2. Insert the adapter ring into the reel-bearing housing on the side plate (Figure 6).

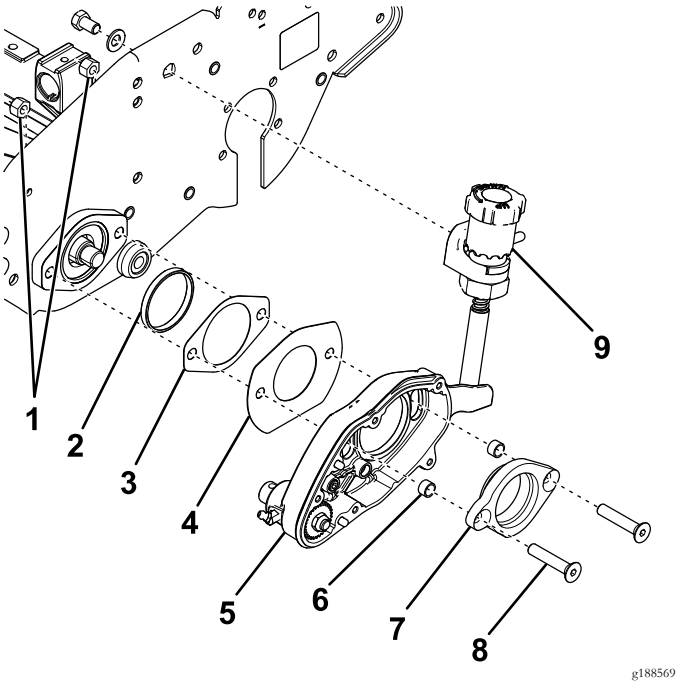

Figure 6

1. Locknuts
2. Adapter ring
3. New gasket
4. Slot cover
5. Groomer housing
6. New spacer
7. Bearing adapter
8. Flat-head screw
9. Adjustment knob

3. Insert the 2 flat-head screws through the bearing adapter and slide the new spacers onto the ends (Figure 6).
4. Insert the bearing adapter into the groomer housing (Figure 6).

   Note: Ensure that the bearing adapter is correctly oriented.
5. Slide the slot cover and new gasket over the flat-head screws (Figure 6).

   Note: Ensure that the flat edge of the slot cover is on the bottom.
6. Insert the flat-head screws through the reel-bearing housing and secure them with 2 locknuts (Figure 6).

   Note: Torque the locknuts to 31 to 37 N·m (23 to 27 ft-lb).
7. Secure the adjustment knob to the side plate with a bolt and washer (Figure 6).
8. Secure the reel from turning with a wood block.
9. Thread the shaft assembly onto the reel-shaft extension (Figure 7).

   Note: Torque the shaft assembly to 54 to 81 N·m (40 to 60 ft-lb).

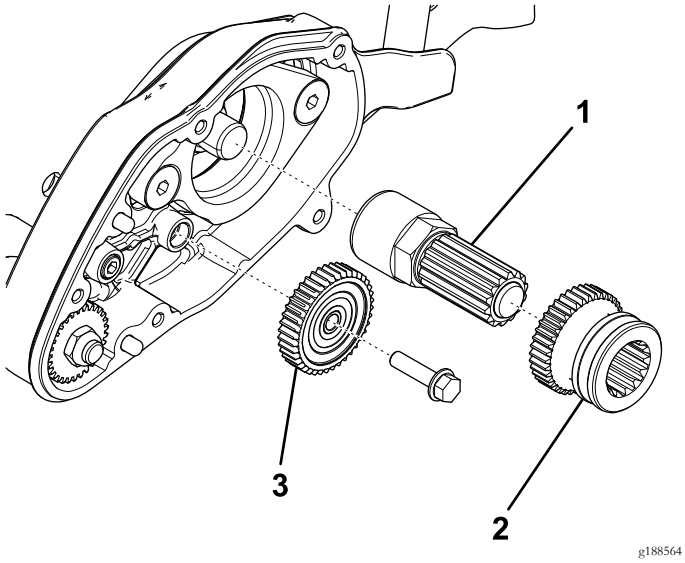

g188564

Figure 7

1. Shaft assembly
2. Drive gear
3. 40 tooth idler gear

10. Apply synthetic grease to the shaft assembly, and slide the drive gear onto it (Figure 7).

    Note: Ensure that the drive gear is correctly oriented.

11. Install the 40 tooth idler gear (Figure 7).
12. Coat the teeth of the gears with synthetic grease.
13. Place the gasket over the dowel pins on the groomer housing (Figure 8).

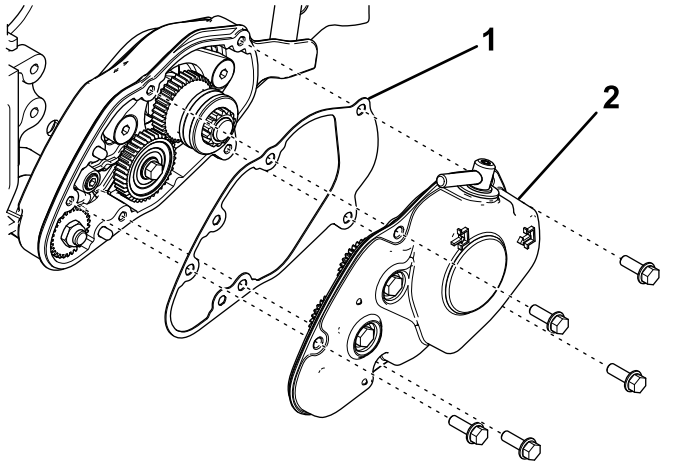

g188567

Figure 8

1. Gasket
2. Groomer-housing cover

14. Install the cover onto the groomer housing, inserting the actuator pin of the clutch assembly into the groove on the drive gear (Figure 8).
15. Secure the cover with 5 flange-head bolts (Figure 8).

    Note: Torque the bolts to 9.6 to 10.5 N·m (85 to 95 in-lb).

3

Preparing the Right Side of the Machine

No Parts Required

Procedure

1. Remove the reel-drive-belt cover from the side plate (Figure 9).

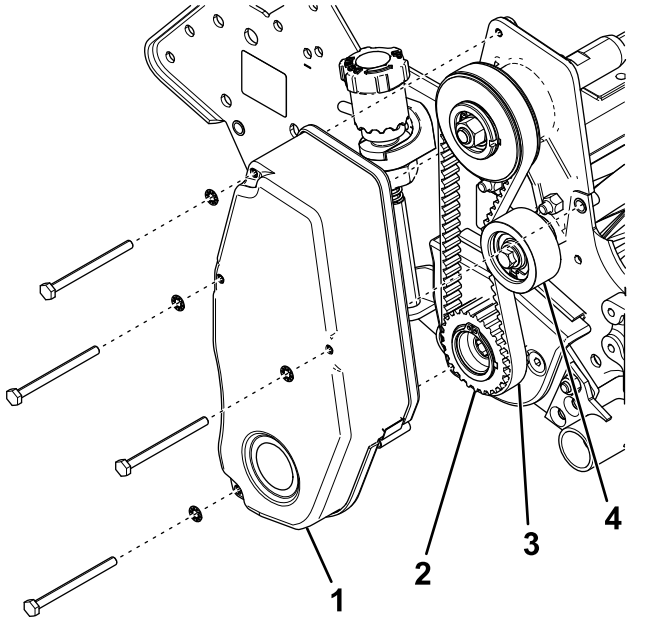

g188570

Figure 9

1. Reel-drive-belt cover
2. Drive pulley
3. Reel-drive belt
4. Idler pulley

2. Loosen the idler pulley and remove the reel-drive belt (Figure 9).
3. Remove the drive pulley from the reel shaft (Figure 9).
4. Remove the flat-head screws, locknuts, groomer-arm cover, and bearing adapter from the side plate (Figure 10).

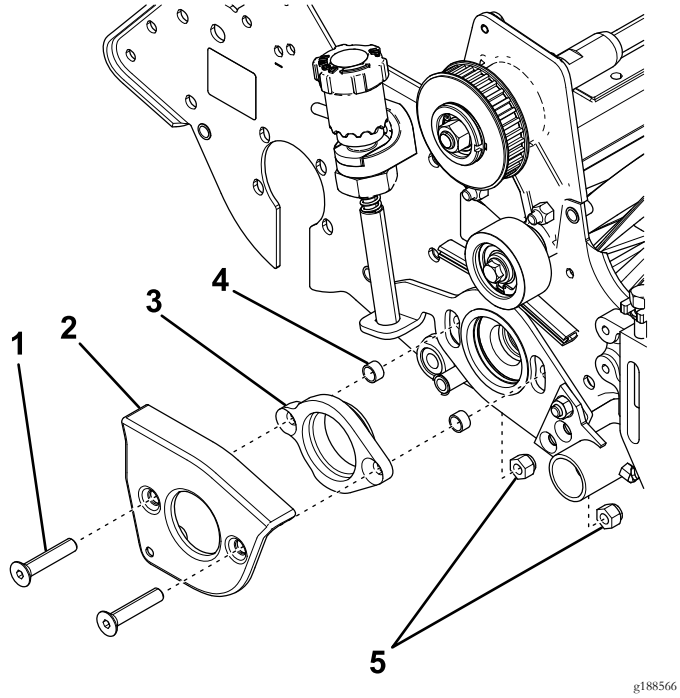

Figure 10

1. Flat-head screw
2. Groomer-arm cover
3. Bearing adapter
4. Spacer
5. Locknuts

5. Remove and discard the spacers (Figure 10).

4

Installing the Right Side of the Kit

Parts needed for this procedure:

2	Spacer

Procedure

1. Insert the 2 flat-head screws through the groomer-arm cover and bearing adapter, and slide the new spacers onto the ends (Figure 11).

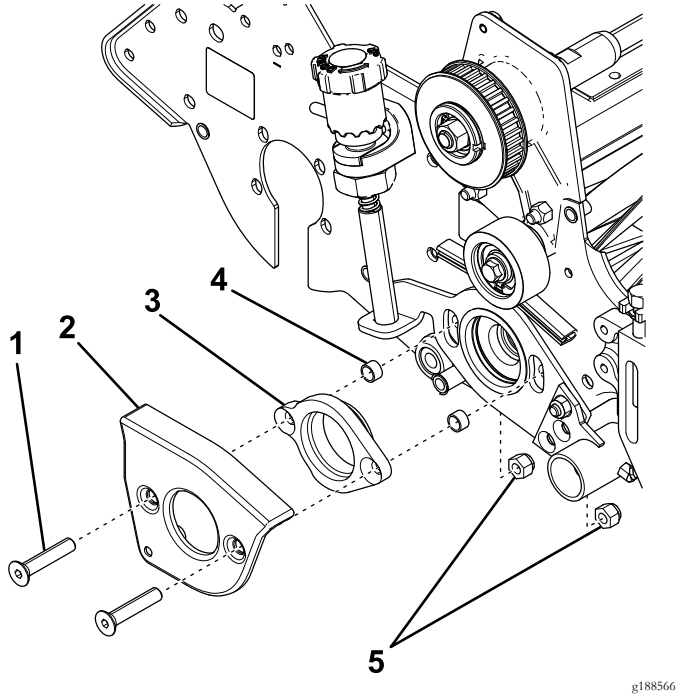

Figure 11

1. Flat-head screw
2. Groomer-arm cover
3. Bearing adapter
4. New spacer
5. Locknuts

2. Insert the flat-head screws through the side plate and secure them with 2 locknuts (Figure 11).

   Note: Ensure that the bearing adapter is correctly oriented.

3. Torque the locknuts to 31 to 37 N·m (23 to 27 ft-lb).
4. Install the drive pulley to the reel shaft (Figure 12).

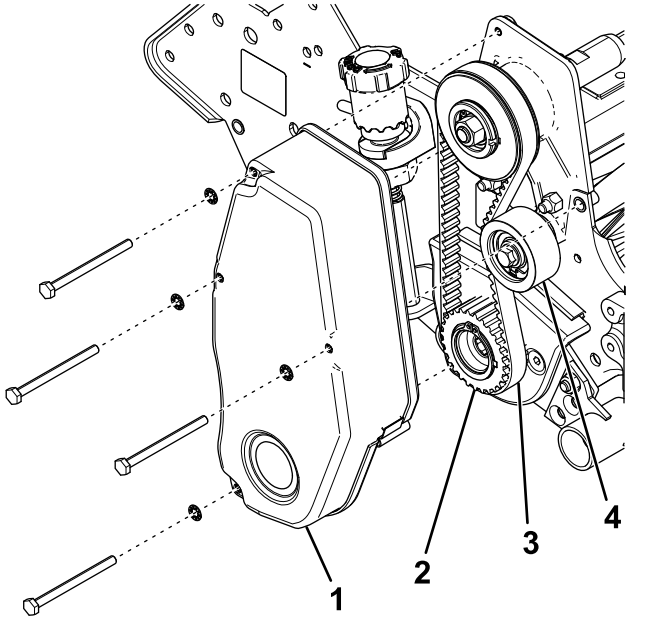

Figure 12

1. Reel-drive-belt cover
2. Drive pulley
3. Reel-drive belt
4. Idler pulley

5. Secure the reel from turning with a wood block, and torque the drive pulley to 54 to 81 N·m (40 to 60 ft-lb).
6. Install the reel-drive belt and check the tension by pressing the belt at the mid span of the pulleys with 1.5 to 2.5 kg (3 to 5 lb) of force.

   The belt should deflect 6 mm (1/4 inch). Reposition the idler pulley to adjust the belt tension. Tighten the idler-pulley screw once you achieve the proper tension.
7. Install the reel-drive-belt cover to the side plate (Figure 12).
8. Install the groomer reel; refer to your groomer drive system *Operator's Manual*.

Notes:



Count on it.