Form No. 3409-396 Rev A

TORO®

Count on it.

Operator's Manual

TimeCutter® ZS 4200T or ZS 5000 Riding Mower

Model No. 74657—Serial No. 400000000 and Up
Model No. 74661—Serial No. 400000000 and Up

Register at www.Toro.com.
Original Instructions (EN)

CE

3409-396 A

This product complies with all relevant European directives; for details, please see the separate product specific Declaration of Conformity (DOC) sheet.

Gross Horsepower

The gross or net horsepower of this engine was laboratory rated by the engine manufacturer in accordance with the Society of Automotive Engineers (SAE) J1940. As configured to meet safety, emission, and operating requirements, the actual engine torque on this class of mower will be significantly lower.

Go to www.Toro.com to view specifications on your mower model.

Important: If you are using a machine with a Toro engine above 1500 m (5,000 ft) for a continuous period, ensure that the High Altitude Kit has been installed so that the engine meets CARB/EPA emission regulations. The High Altitude Kit increases engine performance while preventing spark-plug fouling, hard starting, and increased emissions. Once you have installed the kit, attach the high-altitude label next to the serial decal on the machine. Contact any Authorized Toro Service Dealer to obtain the proper High Altitude Kit and high-altitude label for your machine. To locate a dealer convenient to you, access our website at www.Toro.com or contact our Toro Customer Care Department at the number(s) listed in your Emission Control Warranty Statement.

Remove the kit from the engine and restore the engine to its original factory configuration when running the engine under 1500 m (5,000 ft). Do not operate an engine that has been converted for high-altitude use at lower altitudes; otherwise, you could overheat and damage the engine.

If you are unsure whether or not your machine has been converted for high-altitude use, look for the following label (Figure 3).



Figure 3

Introduction

This machine is a ride-on, rotary-blade intended to be used by homeowners in residential applications. It is primarily designed for cutting grass on well-maintained lawns. It is not designed for cutting brush, mowing grass and other growth alongside highways, or for agricultural uses.

Read this information carefully to learn how to operate and maintain your product properly and to avoid injury and product damage. You are responsible for operating the product properly and safely.

You may contact Toro directly at www.Toro.com for product safety and operation training materials, accessory information, help finding a dealer, or to register your product.

Whenever you need service, genuine Toro parts, or additional information, contact an Authorized Service Dealer or Toro Customer Service and have the model and serial numbers of your product ready. Figure 1 identifies the location of the model and serial numbers on the product. Write the numbers in the space provided.

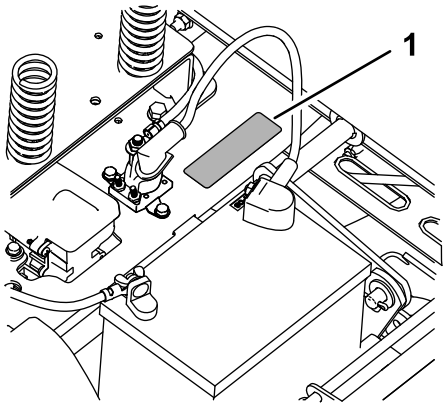

Figure 1
Under the seat

1. Model and serial-number plate

Write the product model and serial numbers in the space below:

Model No. _____

Serial No. _____

This manual identifies potential hazards and has safety messages identified by the safety-alert symbol (Figure 2), which signals a hazard that may cause serious injury or death if you do not follow the recommended precautions.

© 2016—The Toro® Company
8111 Lyndale Avenue South
Bloomington, MN 55420

Contact us at www.Toro.com.
Printed in the USA
All Rights Reserved



g000502

Figure 2

1. Safety-alert symbol

This manual uses 2 words to highlight information. **Important** calls attention to special mechanical information and **Note** emphasizes general information worthy of special attention.

Contents

Safety 4
General Safety 4
Slope Indicator 5
Safety and Instructional Decals 6
Product Overview 12
Controls 12
Before Operation 13
Before Operation Safety 13
Recommended Fuel 14
Using Stabilizer/Conditioner 14
Filling the Fuel Tank 14
Checking the Engine-Oil Level 15
Breaking in a New Machine 15
Think Safety First 15
Using the Safety-Interlock System 16
Positioning the Seat 16
Adjusting the Motion-Control Levers 16
Converting to Side Discharge 17
During Operation 20
During Operation Safety 20
Operating the Mower Blade-Control Switch (PTO) 21
Operating the Throttle 21
Operating the Choke 21
Operating the Ignition Switch 22
Starting and Shutting Off the Engine 22
Using the Motion-Control Levers 23
Driving the Machine 23
Stopping the Machine 24
Adjusting the Height of Cut 25
Adjusting the Anti-Scalp Rollers 25
Using the Side Discharge 26
Operating Tips 26
After Operation 27
After Operation Safety 27
Pushing the Machine by Hand 27
Transporting the Machine 28
Loading the Machine 29
Maintenance 30
Recommended Maintenance Schedule(s) 30
Pre-Maintenance Procedures 31
Maintenance and Storage 31
Raising the Seat 31
Releasing the Mower-Deck Curtain 31
Lubrication 32
Greasing the Bearings 32
Engine Maintenance 32
Engine Safety 32
Servicing the Air Cleaner 32
Servicing the Engine Oil 33
Servicing the Spark Plug 36
Cleaning the Cooling System 37
Fuel System Maintenance 37
Replacing the In-Line Fuel Filter 37
Electrical System Maintenance 38
Electrical System Safety 38

Servicing the Battery....38
Servicing the Fuses....40
Drive System Maintenance....40
Checking the Tire Pressure....40
Releasing the Electric Brake....41
Mower Maintenance....41
Servicing the Cutting Blades....41
Leveling the Mower Deck....43
Removing the Mower Deck....45
Installing the Mower Deck....46
Replacing the Grass Deflector....47
Mower Belt Maintenance....48
Inspecting the Belts....48
Replacing the Mower-Deck Belt....48
Cleaning....49
Washing the Underside of the Mower....49
Storage....50
Cleaning and Storage....50
Troubleshooting....52
Schematics....54

Safety

This machine has been designed in accordance with EN ISO 5395:2013.

General Safety

This product is capable of amputating hands and feet and of throwing objects. Always follow all safety instructions to avoid serious personal injury.

Using this product for purposes other than its intended use could prove dangerous to you and bystanders.

- Read and understand the contents of this *Operator's Manual* before you start the engine. Ensure that everyone using this product knows how to use it and understands the warnings.
- Do not put your hands or feet near moving components of the machine.
- Do not operate the machine without all guards and other safety protective devices in place and working on the machine.
- Keep clear of any discharge opening. Keep bystanders a safe distance away from the machine.
- Keep children out of the operating area. Never allow children to operate the machine.
- Stop the machine and shut off the engine before servicing, fueling, or unclogging the machine.

Improperly using or maintaining this machine can result in injury. To reduce the potential for injury, comply with these safety instructions and always pay attention to the safety-alert symbol, which means Caution, Warning, or Danger—personal safety instruction. Failure to comply with these instructions may result in personal injury or death.

You can find additional items of safety information in their respective sections throughout this manual.

Slope Indicator

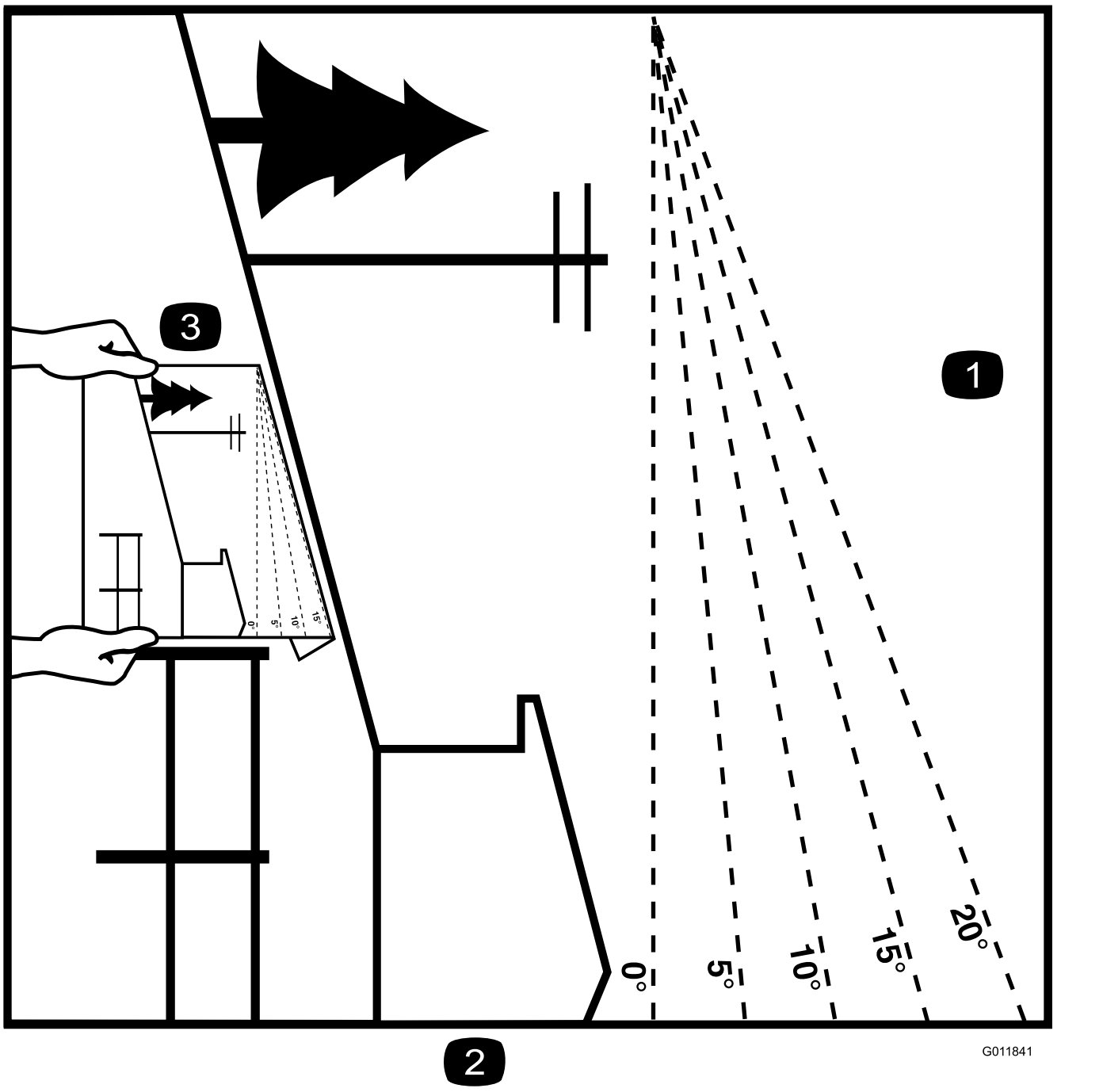

Figure 4

This page may be copied for personal use.

1. The maximum slope you can safely operate the machine on is **15 degrees**. Use the slope chart to determine the degree of slope of hills before operating. **Do not operate this machine on a slope greater than 15 degrees.** Fold along the appropriate line to match the recommended slope.
2. Align this edge with a vertical surface, a tree, building, fence pole, etc.
3. Example of how to compare slope with folded edge

Safety and Instructional Decals

Safety decals and instructions are easily visible to the operator and are located near any area of potential danger. Replace any decal that is damaged or missing.

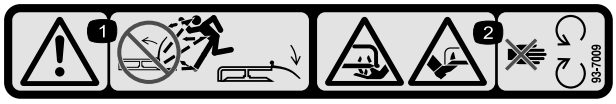

decal93-7009

93-7009

1. Warning—do not operate the mower with the deflector up or removed; keep the deflector in place.
2. Cutting/dismemberment hazard of hand or foot, mower blade—stay away from moving parts.

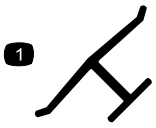

decaloemmarkt

Manufacturer's Mark

1. Indicates the blade is identified as a part from the original machine manufacturer.

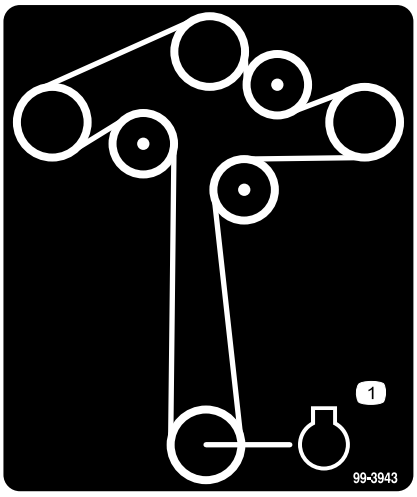

decal99-3943

99-3943

For Models with 127 cm (50 inch) Decks

1. Engine

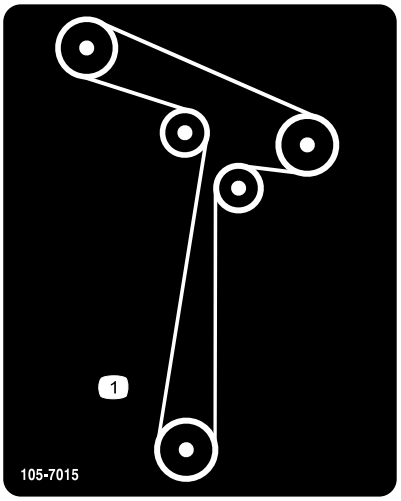

decal105-7015

105-7015

For Models with 107 cm (42 inch) Decks

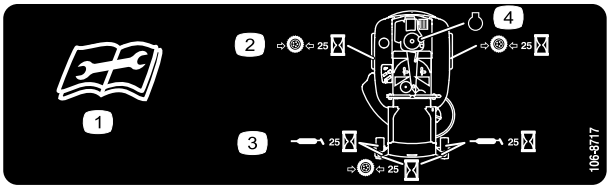

decal106-8717

106-8717

1. Read the instructions before servicing or performing maintenance.
2. Check tire pressure every 25 operating hours.
3. Grease every 25 operating hours.
4. Engine

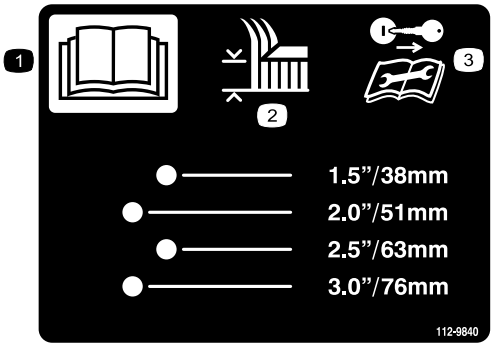

decal112-9840

112-9840

For Models with 127 cm (50 inch) Decks

1. Read the *Operator's Manual*.
2. Height of cut
3. Remove the ignition key and read the instructions before servicing or performing maintenance.

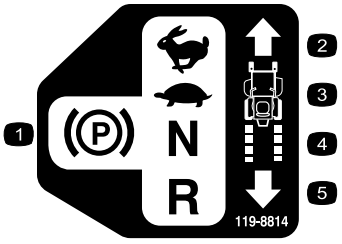

decal119-8814

119-8814

1. Parking position
2. Fast
3. Slow
4. Neutral
5. Reverse

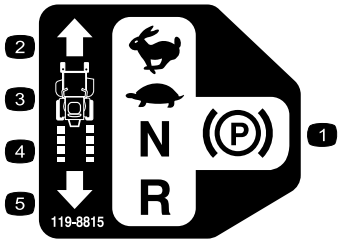

decal119-8815

119-8815

1. Parking position
2. Fast
3. Slow
4. Neutral
5. Reverse

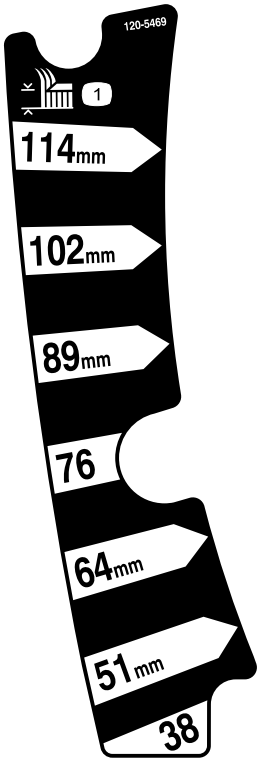

decal120-5469

120-5469

For Models with 107 cm (42 inch) Decks

1. Height of cut

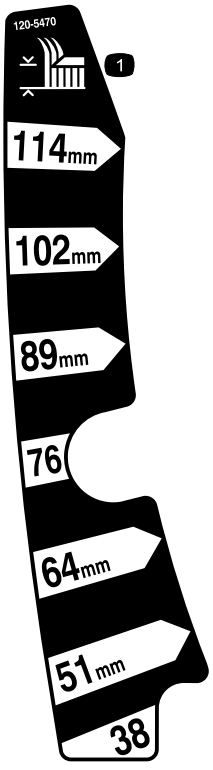

decal120-5470

120-5470

For Models with 127 cm (50 inch) Decks

1. Height of cut

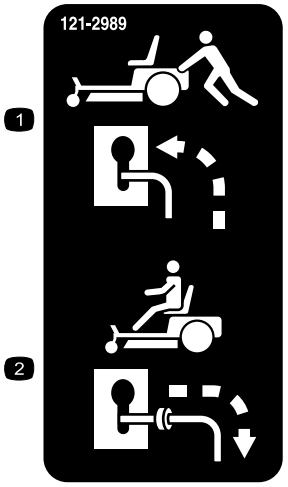

decal121-2989b

121-2989

1. Bypass lever position for pushing the machine
2. Bypass lever position for operating the machine

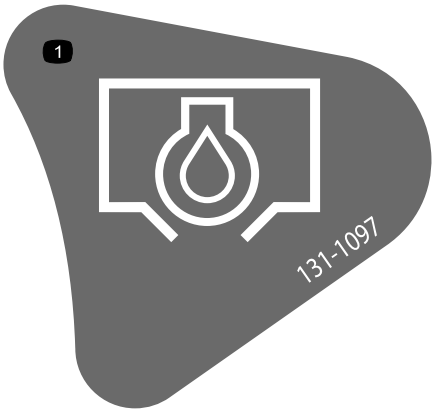

decal131-1097

131-1097

1. Oil drain

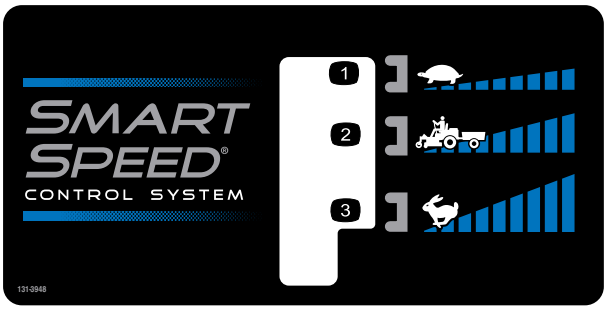

decal131-3948

131-3948

1. Slow
2. Towing
3. Fast



decalbatterysymbols

Battery Symbols

Some or all of these symbols are on your battery.

1. Explosion hazard
2. No fire, open flame, or smoking
3. Caustic liquid/chemical burn hazard
4. Wear eye protection.
5. Read the *Operator's Manual.*
6. Keep bystanders a safe distance away from the battery.
7. Wear eye protection; explosive gases can cause blindness and other injuries.
8. Battery acid can cause blindness or severe burns.
9. Flush eyes immediately with water and get medical help fast.
10. Contains lead; do not discard.

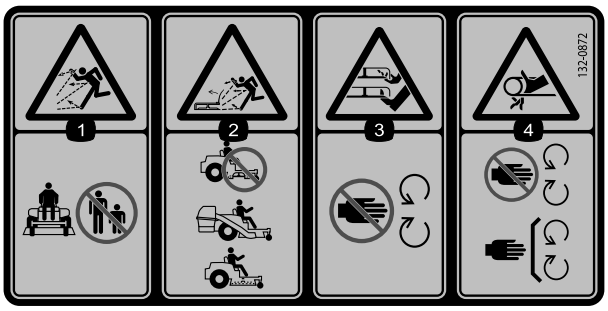

decal132-0872

132-0872

1. Thrown object hazard—keep bystanders away from the machine.
2. Thrown object hazard, raised baffle—do not operate the machine with an open deck; use a bagger or a baffle.
3. Severing hazard of hand or foot—keep away from moving parts.
4. Entanglement hazard—keep away from moving parts; keep all guards and shields in place.

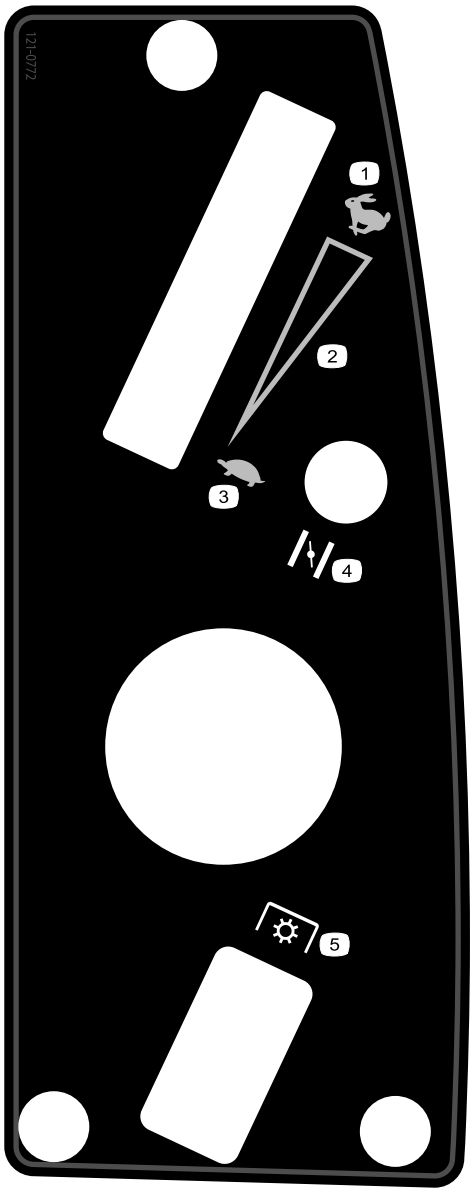

decal121-0772

121-0772

For Models with 107 cm (42 inch) Decks

1. Fast
2. Continuous-variable setting
3. Slow
4. Choke
5. Power takeoff (PTO), blade-control switch

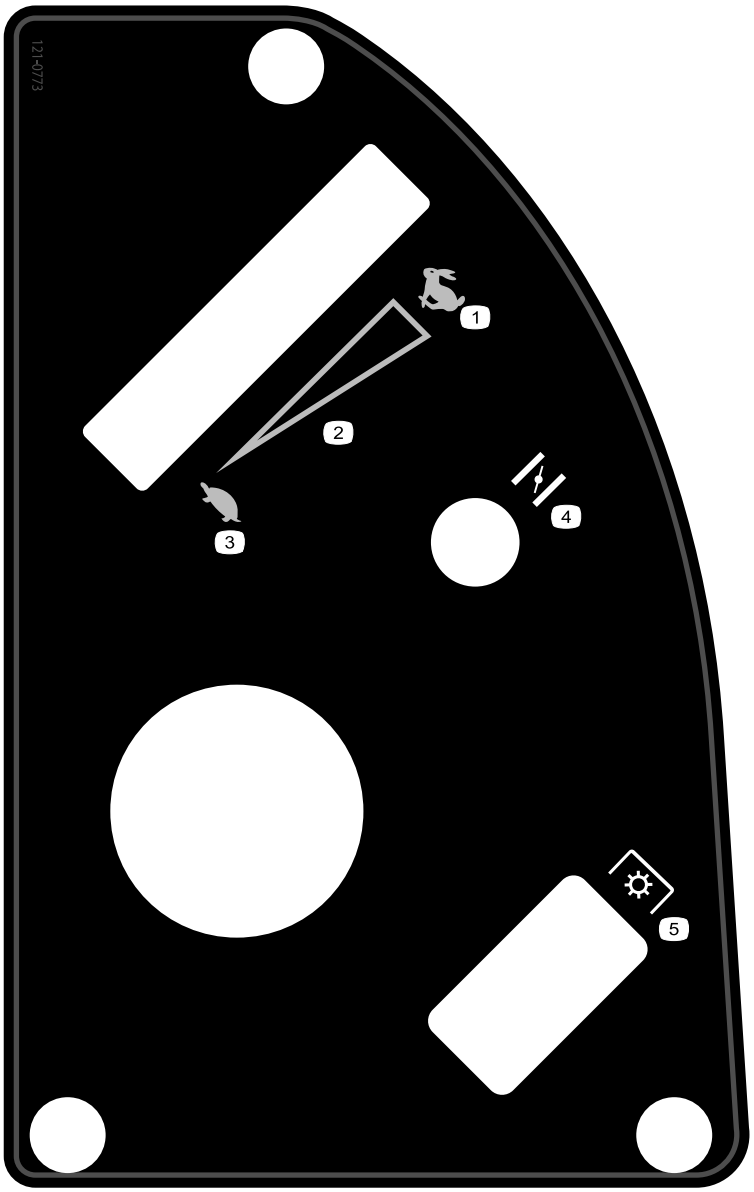

decal121-0773

121-0773

For Models with 127 cm (50 inch) Decks

1. Fast
2. Continuous-variable setting
3. Slow
4. Choke
5. Power takeoff (PTO), blade-control switch

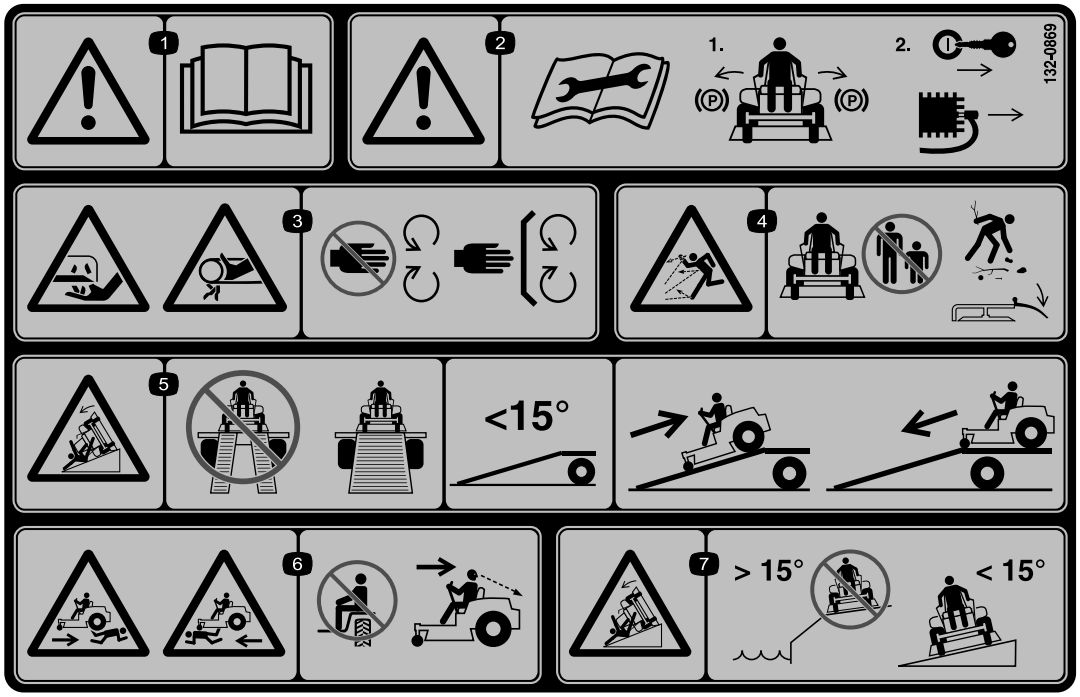

decal132-0869

132-0869

1. Warning—read the *Operator's Manual*.
2. Warning—before servicing, engage the parking brake, remove the key and the spark plug connection.
3. Cutting hazard of hand, mower blade; pinching hazard of hand, belt—keep hands and feet away from moving parts; keep all guards and shields in place.
4. Thrown object hazard—keep bystanders away from the machine; remove debris from the area before mowing; keep the deflector shield down.
5. Ramp tipping hazard—when loading onto a trailer, do not use dual ramps; only use a single ramp wide enough for the machine and that has an incline less than 15 degrees; back up the ramp (in reverse) and drive forward off the ramp.
6. Bodily harm hazard—no riders; look behind you when mowing in reverse.
7. Tipping hazard on slopes—do not use on slopes near open water; do not use on slopes greater than 15 degrees.

Product Overview

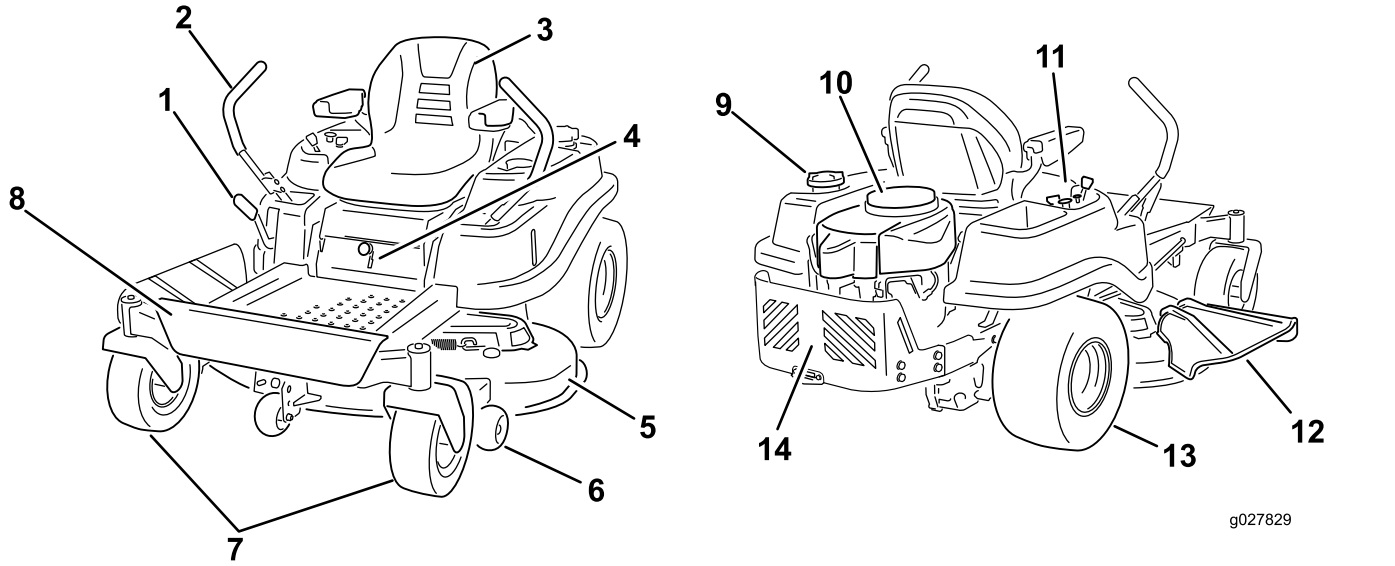

Figure 5

1. Height-of-cut lever
2. Motion-control levers
3. Operator seat
4. Smart Speed™ lever
5. Mower deck
6. Anti-scalp roller
7. Front caster wheel
8. Footrest
9. Fuel-tank cap
10. Engine
11. Control panel
12. Deflector
13. Rear-drive wheel
14. Engine guard

Controls

Become familiar with all the controls in Figure 5 and Figure 6 before you start the engine and operate the machine.

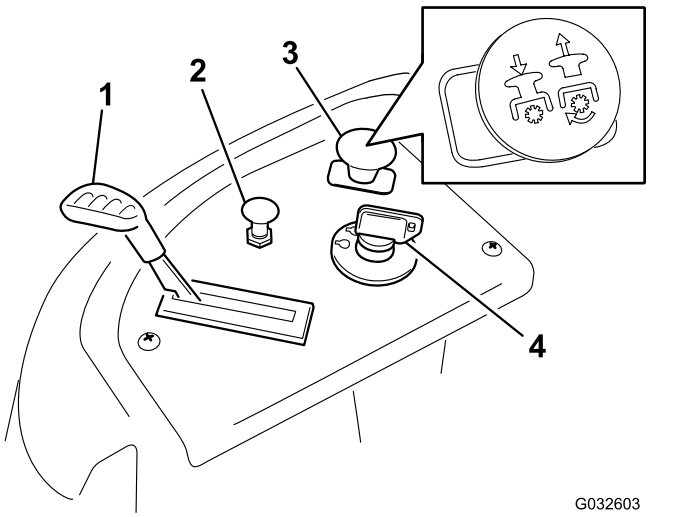

Figure 6

Control panel

1. Throttle
2. Choke
3. Blade-control switch (power takeoff)
4. Ignition switch

Ignition Switch

Use this switch to start the mower engine. It has 3 positions: START, RUN, and OFF.

Choke Control

Use the choke to start a cold engine. Pull the choke knob up to engage it. Push the choke knob down to disengage it (Figure 6).

Throttle Control

The throttle controls the engine speed, and it has a continuous-variable setting from the SLOW to FAST position (Figure 6).

Blade-Control Switch (Power Takeoff)

The blade-control switch, represented by a power-takeoff (PTO) symbol, engages and disengages power to the mower blades (Figure 6).

Motion-Control Levers

Use the motion-control levers to drive the machine forward, reverse, and turn either direction.

Park Position

Move the motion-control levers outward from the center to the PARK position when exiting the machine (Figure 5). Always position the motion-control levers into the PARK position when you stop the machine or leave it unattended.

Smart Speed™ Control System Lever

The Smart Speed™ Control-System lever, located below the operating position, gives you a choice to drive the machine at 3 speed ranges— trim, tow, and mow (Figure 5).

Fuel-Presence Window

You can use the fuel window, located on the left side of the machine, to verify the presence of fuel in the tank (Figure 7).

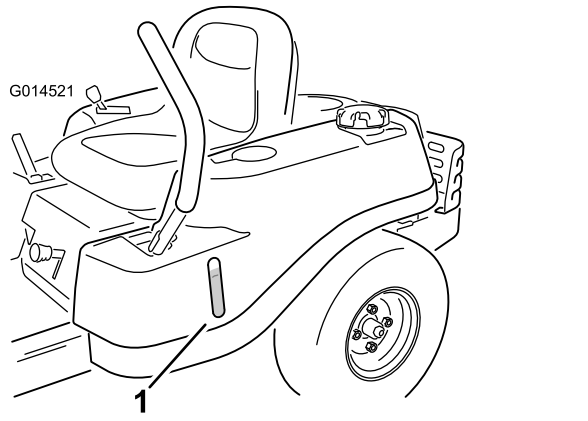

Figure 7

1. Fuel-presence window

Height-of-Cut Lever

Use the height-of-cut lever to lower and raise the deck from the seated position. Moving the lever up (toward you) raises the deck from the ground and moving the lever down (away from you) lowers the deck toward the ground. Adjust the height-of-cut only while the machine is not moving (Figure 5).

Attachments/Accessories

A selection of Toro approved attachments and accessories is available for use with the machine to enhance and expand its capabilities. Contact your Authorized Service Dealer or Distributor or go to www.Toro.com for a list of all approved attachments and accessories.

Operation

Note: Determine the left and right sides of the machine from the normal operating position.

Before Operation

Before Operation Safety

General Safety

- Never allow children or untrained people to operate or service the machine. Local regulations may restrict the age of the operator. The owner is responsible for training all operators and mechanics.
- Become familiar with the safe operation of the equipment, operator controls, and safety signs.
- Know how to stop the machine and engine quickly.
- Check that operator-presence controls, safety switches, and shields are attached and functioning properly. Do not operate the machine unless they are functioning properly.
- Before mowing, always inspect the machine to ensure that the blades, blade bolts, and cutting assemblies are in good working condition. Replace worn or damaged blades and bolts in sets to preserve balance.
- Inspect the area where you will use the machine and remove all objects that the machine could throw.
- Evaluate the terrain to determine the appropriate equipment and any attachments or accessories required to operate the machine properly and safely.

Fuel Safety

- To avoid personal injury or property damage, use extreme care in handling fuel. Fuel vapors are flammable and explosive.
- Extinguish all cigarettes, cigars, pipes, and other sources of ignition.
- Use only an approved fuel container.
- Do not remove the fuel cap or add fuel to the fuel tank while the engine is running or while hot.
- Do not refuel the machine indoors.
- Do not store the machine or fuel container where there is an open flame, spark, or pilot light, such as on a water heater or on other appliances.
- Do not fill containers inside a vehicle or on a truck or trailer bed with a plastic liner. Always place containers on the ground, away from your vehicle before filling.
- Remove the equipment from the truck or trailer and refuel it while it is on the ground. If this is not possible, then refuel from a portable container rather than a fuel-dispenser nozzle.
- Do not operate the machine without the entire exhaust system in place and in proper working condition.

- Keep the fuel-dispenser nozzle in contact with the rim of the fuel tank or container opening at all times until fueling is complete. Do not use a nozzle lock-open device.
- If you spill fuel on your clothing, change your clothing immediately. Wipe up any fuel that spills.
- Never overfill the fuel tank. Replace the fuel cap and tighten it securely.
- Store fuel in an approved container and keep it out of the reach of children. Never buy more than a 30-day supply of fuel.
- Do not fill the fuel tank completely full. Add fuel to the fuel tank until the level is 6 to 13 mm (1/4 to 1/2 inch) below the bottom of the filler neck. This empty space in the tank allows fuel to expand.
  - Avoid prolonged breathing of vapors.
  - Keep your face away from the nozzle and gas tank opening.
  - Avoid contact with skin; wash off spills with soap and water.

Recommended Fuel

- For best results, use only clean, fresh (less than 30 days old), unleaded gasoline with an octane rating of 87 or higher ((R+M)/2 rating method).
- **Ethanol**: Gasoline with up to 10% ethanol (gasohol) or 15% MTBE (methyl tertiary butyl ether) by volume is acceptable. Ethanol and MTBE are not the same. Gasoline with 15% ethanol (E15) by volume is not approved for use. **Never use gasoline that contains more than 10% ethanol by volume**, such as E15 (contains 15% ethanol), E20 (contains 20% ethanol), or E85 (contains up to 85% ethanol). Using unapproved gasoline may cause performance problems and/or engine damage which may not be covered under warranty.
- **Do not** use gasoline containing methanol.
- **Do not** store fuel either in the fuel tank or fuel containers over the winter unless you use a fuel stabilizer.
- **Do not** add oil to gasoline.

Using Stabilizer/Conditioner

Use a fuel stabilizer/conditioner in the machine to provide the following benefits:

- Keeps fuel fresh during storage of 90 days or less (drain the fuel tank when storing the machine for more than 90 days)
- Cleans the engine while it runs
- Eliminates gum-like varnish buildup in the fuel system, which causes hard starting

Important: Do not use fuel additives containing methanol or ethanol.

Add the correct amount of fuel stabilizer/conditioner to the fuel.

Note: A fuel stabilizer/conditioner is most effective when mixed with fresh fuel. To minimize the chance of varnish deposits in the fuel system, use fuel stabilizer at all times.

Filling the Fuel Tank

1. Park the machine on level ground.
2. Shut off the engine and engage the parking brake.
3. Clean around the fuel-tank cap.
4. Fill the fuel tank to the bottom of the filler neck (Figure 8).

Note: Do not fill the fuel tank completely full. The empty space in the tank allows the fuel to expand.

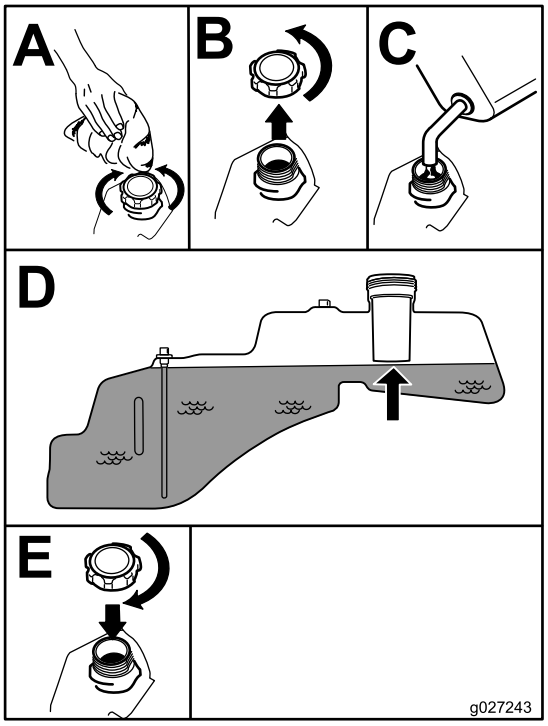

g027243

Figure 8

Checking the Engine-Oil Level

Before you start the engine and use the machine, check the oil level in the engine crankcase; refer to Checking the Engine-Oil Level (page 33).

Breaking in a New Machine

New engines take time to develop full power. Mower decks and drive systems have higher friction when new, placing additional load on the engine. Allow 40 to 50 hours of break-in time for new machines to develop full power and best performance.

Think Safety First

Please read all safety instructions and symbols in the safety section. Knowing this information could help you or bystanders avoid injury.

⚠ DANGER

Operating the machine on wet grass or steep slopes can cause sliding and loss of control.

- **Do not operate on slopes greater than 15 degrees.**
- **Reduce speed and use extreme caution on slopes.**
- **Do not operate the machine near water.**

⚠ DANGER

Wheels dropping over edges can cause rollovers, which may result in serious injury, death, or drowning.

Do not operate the machine near drop-offs.

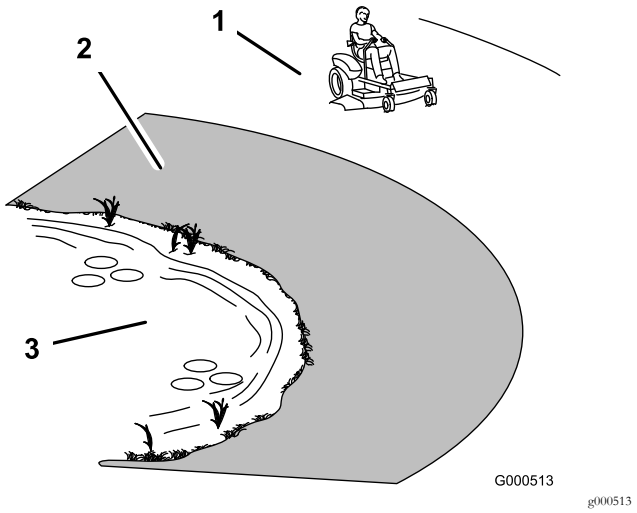

Figure 9

1. Safe Zone—use the machine here on slopes less than 15 degrees or flat areas.
2. Danger Zone—use a walk-behind mower and/or a hand trimmer on slopes greater than 15 degrees, near drop-offs and water.
3. Water

⚠ CAUTION

This machine produces sound levels in excess of 85 dBA at the operator's ear and can cause hearing loss through extended periods of exposure.

Wear hearing protection when operating this machine.

Use protective equipment for your eyes, ears, hands, feet, and head.

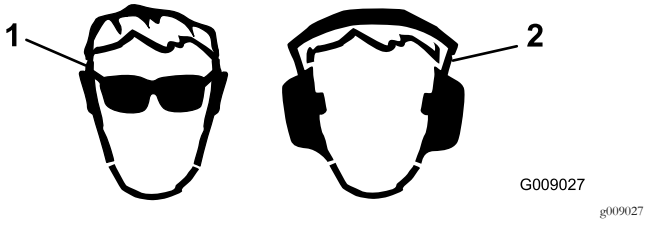

Figure 10

1. Wear eye protection.
2. Wear hearing protection.

Using the Safety-Interlock System

⚠ WARNING

If the safety-interlock switches are disconnected or damaged, the machine could operate unexpectedly, causing personal injury.

- **Do not tamper with the interlock switches.**
- **Check the operation of the interlock switches daily and replace any damaged switches before operating the machine.**

Understanding the Safety-Interlock System

The safety-interlock system is designed to prevent the engine from starting unless:

- The blade-control switch (PTO) is disengaged.
- The motion-control levers are in the PARK position.

The safety-interlock system also is designed to shut off the engine whenever the control levers are out of the PARK position and you rise from the seat.

Testing the Safety-Interlock System

Test the safety-interlock system before you use the machine each time. If the safety system does not operate as described below, have an Authorized Service Dealer repair the safety system immediately.

1. Sit on the seat, move the motion-control levers in the PARK position, and move the blade-control switch to the ON position. Try starting the engine; the engine should not crank.
2. Sit on the seat and move the blade-control switch to the OFF position. Move either motion-control lever to the center, unlocked position. Try starting the engine; the engine should not crank. Repeat with the other motion-control lever.
3. Sit on the seat, move the blade-control switch to the OFF position, and lock the motion-control levers in the PARK position. Start the engine. While the engine is running, engage the blade-control switch, and rise slightly from the seat; the engine should shut off.
4. Sit on the seat, move the blade-control switch to the OFF position, and lock the motion-control levers in the PARK position. Start the engine. While the engine is running, move the motion-control levers to the center, unlocked position, engage the blade-control switch, and rise slightly from the seat; the engine should shut off.

Positioning the Seat

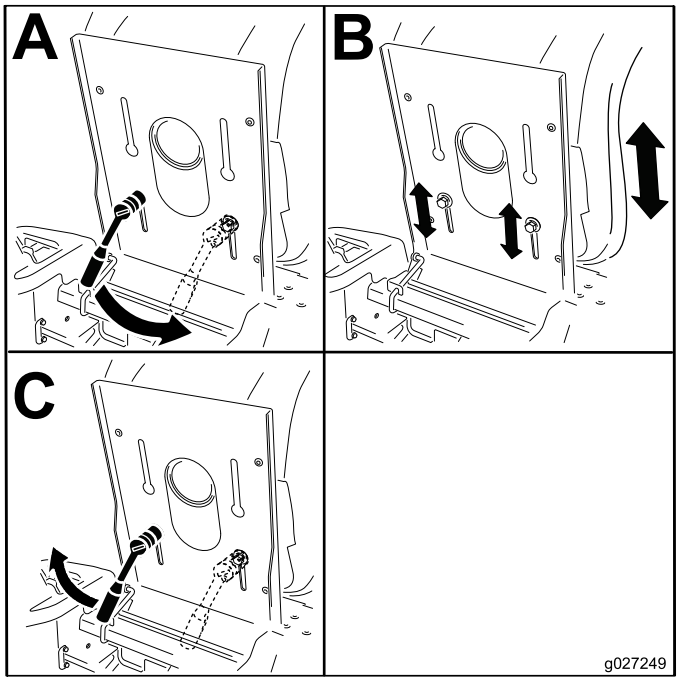

g027249

Figure 11

Adjusting the Motion-Control Levers

Adjusting the Height

You can adjust the motion-control levers higher or lower for maximum comfort (Figure 12).

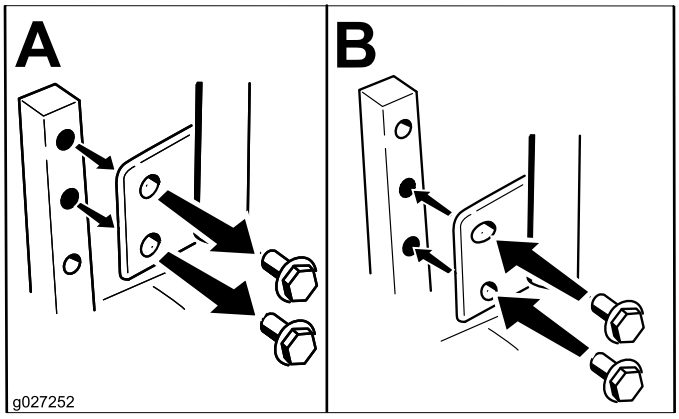

g027252

Figure 12

Adjusting the Tilt

You can adjust the motion-control levers forward or rearward for your comfort.

1. Loosen the upper bolt holding the control lever to the control-arm shaft.
2. Loosen the lower bolt just enough to pivot the control lever forward or rearward (Figure 12).
3. Tighten both bolts to secure the control lever in the new position.
4. Repeat the adjustment for the other control lever.

Converting to Side Discharge

Machines with 107 cm (42-inch) Mower Decks Only

The mower deck and mower blades shipped with this machine were designed for optimum mulching and side discharge performance.

Removing the Discharge Cover for Side-Discharging

1. Park the machine on a level surface and disengage the blade-control switch.
2. Ensure that the parking brake is engaged, shut off the engine, remove the key, and wait for all moving parts to stop before leaving the operating position.
3. Remove the 2 bolts and nuts that secure the discharge cover to the mower (Figure 13).

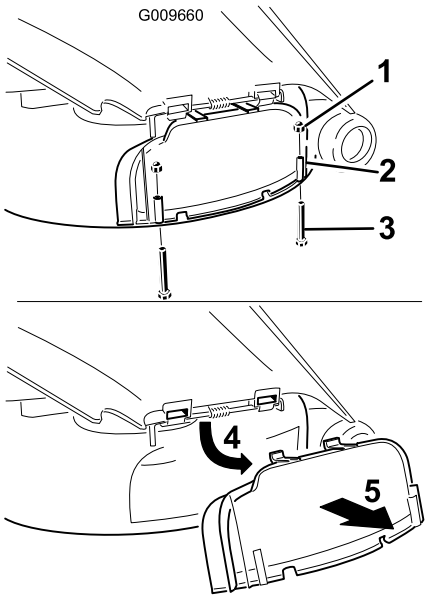

Figure 13

1. Cap nut (1/4 inch)
2. Discharge cover
3. Bolt (1/4 x 2-1/2 inches)
4. Rotate the cover up
5. Remove the cover

4. Remove the discharge cover.
5. Lift up the grass deflector, and locate the lock nut on the deflector pivot rod.
6. Remove the existing thin nut (3/8 inch).
7. Install the cutoff baffle to the exposed pivot rod (Figure 14).

   Note: Use the existing thin nut (3/8 inch) to secure the baffle to the mower.

   Note: The cutoff baffle was shipped with the machine as a loose part.

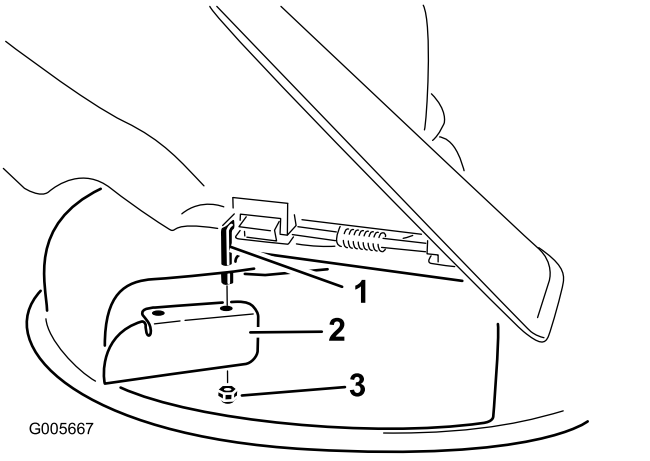

Figure 14

1. Pivot rod
2. Cutoff baffle (originally shipped with the machine)
3. Existing thin nut (3/8 inch)

8. Torque the fastener to 7 to 9 N·m (14 to 18 ft-lb).
9. Lower the grass deflector over the discharge opening

   Important: Ensure that the mower has a hinged grass deflector that disperses clippings to the side and down toward the turf, while in side-discharge mode.

Installing the Discharge Cover for Mulching

1. Park the machine on a level surface and disengage the blade-control switch.
2. Ensure that the parking brake is engaged, shut off the engine, remove the key, and wait for all the moving parts to stop before leaving the operating position.
3. Remove the cutoff baffle from the mower deck (Figure 14).
4. Lift the grass deflector and slide the tabs on top of the discharge cover under the grass deflector retaining rod.
5. Rotate the discharge cover down over the opening, and onto the lower lip of the mower (Figure 15).

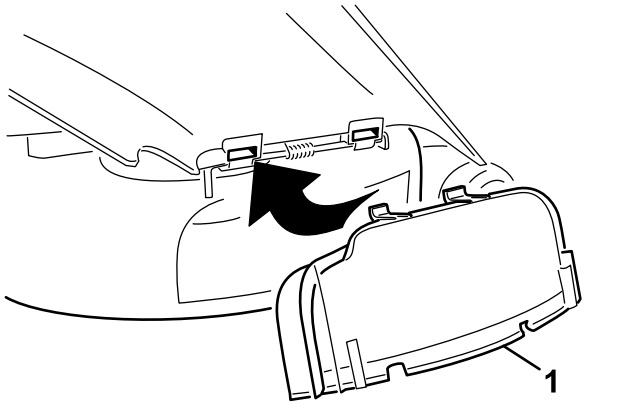

Figure 15

1. Discharge cover
2. Cap nut (1/4 inch)
3. Bolt (1/4 x 2-1/2 inches)

6. Secure the discharge cover to the lower lip of the mower with 2 bolts (1/4 x 2-1/2 inches) and 2 cap nuts (1/4 inch) as shown in Figure 15.

   Note: Do not overtighten the nuts; this could distort the cover and cause blade contact.

Machines with 127 cm (50-inch) Mower Decks Only

The mower deck and mower blades shipped with this machine were designed for optimum mulching and side discharge performance.

Removing the Right Baffle for Side-Discharging

1. Park the machine on a level surface and disengage the blade-control switch.
2. Ensure that the parking brake is engaged, shut off the engine, remove the key, and wait for all moving parts to stop before leaving the operating position.
3. Remove the right mower blade; refer to Removing the Blades (page 43).
4. Remove the 2 knobs and curved washers that secure the right baffle to the mower (Figure 16).

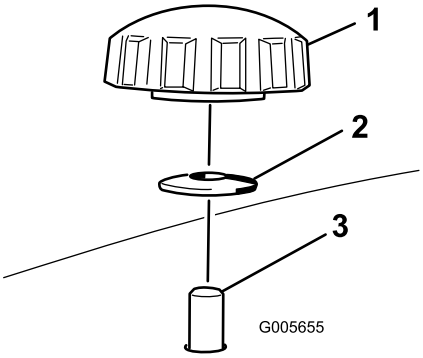

Figure 16

1. Knob
2. Curved washer
3. Baffle stud coming through the mower

5. Remove the right baffle and lower the grass deflector over the discharge opening as shown in Figure 16 and Figure 17.

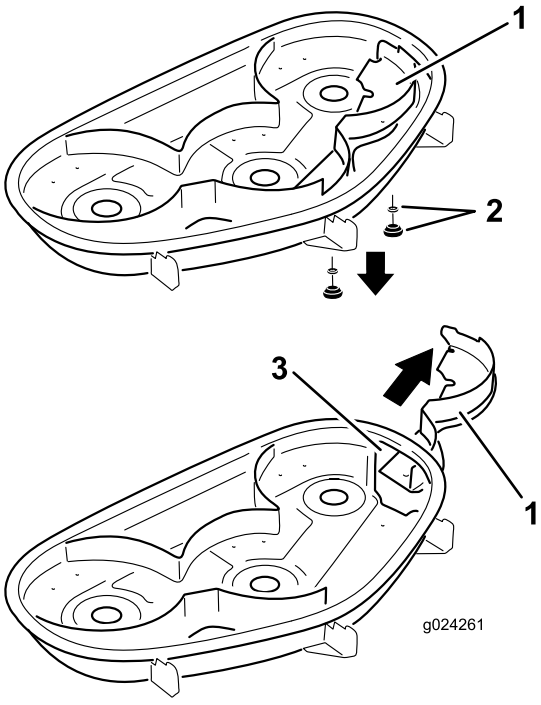

Figure 17

1. Right baffle
2. Curved washer and knob
3. Discharge opening

6. Install fasteners into the holes in the top of the mower to prevent flying debris.

⚠ WARNING

Open holes in the mower expose you and others to thrown debris that can cause severe injury.

- **Never operate the mower without hardware mounted in all holes in the mower housing.**
- **Install the hardware in the mounting holes when you remove the mulching baffle.**

7. Install the right mower blade; refer to Installing the Blades (page 43).
8. Lift up the grass deflector. Install 2 bolts (5/16 x 3/4 inch) to the 2 holes along the deck cutout.
9. Install the cutoff baffle to the mower deck (Figure 18).

   Note: Use the 2 locknuts (5/16 inch) to secure the baffle to the mower deck.

   Note: The cutoff baffle was shipped with the machine as a loose part.

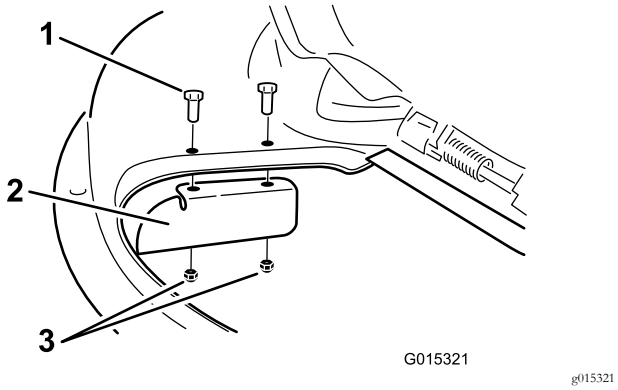

Figure 18

1. Bolt (5/16 x 3/4 inch)
2. Cutoff baffle
3. Locknut (5/16 inch)

10. Torque the fasteners to 7 to 9 N·m (14 to 18 ft-lb).
11. Lower the grass deflector over the discharge opening.

    Important: Ensure that the mower has a hinged grass deflector that disperses clippings to the side and down toward the turf, while in side-discharge mode.

Installing the Right Baffle for Mulching

1. Park the machine on a level surface and disengage the blade-control switch.
2. Ensure that the parking brake is engaged, shut off the engine, remove the key, and wait for all moving parts to stop before leaving the operating position.
3. Remove the cutoff baffle from the mower deck (Figure 18).
4. Remove the right mower blade; refer to Removing the Blades (page 43).
5. Slide the right baffle under the mower deck, and secure it using 2 knobs and the curved washers (cupped side facing the mower) as shown in Figure 16 and Figure 17.

   Important: Ensure that the tab on the far right side of the right baffle is outside of the mower and is flush with the mower wall.
6. Install the right mower blade; refer to Installing the Blades (page 43).

During Operation

During Operation Safety

General Safety

- The owner/operator can prevent and is responsible for accidents that may cause personal injury or property damage.
- Wear appropriate clothing, including eye protection; slip-resistant, substantial footwear; and hearing protection. Tie back long hair and do not wear jewelry.
- Do not operate the machine while ill, tired, or under the influence of alcohol or drugs.
- Never carry passengers on the machine and keep bystanders and pets away from the machine during operation.
- Operate the machine only in good visibility to avoid holes or hidden hazards.
- Avoid mowing on wet grass. Reduced traction could cause the machine to slide.
- Ensure that all drives are in neutral, the parking brake is engaged, and you are in the operating position before you start the engine.
- Keep your hands and feet away from the cutting units. Keep clear of the discharge opening at all times.
- Look behind and down before backing up to be sure of a clear path.
- Use care when approaching blind corners, shrubs, trees, or other objects that may obscure your vision.
- Do not mow near drop-offs, ditches, or embankments. The machine could suddenly roll over if a wheel goes over the edge or if the edge gives way.
- Stop the blades whenever you are not mowing.
- Stop the machine and inspect the blades after striking an object or if there is an abnormal vibration in the machine. Make all necessary repairs before resuming operation.
- Slow down and use caution when making turns and crossing roads and sidewalks with the machine. Always yield the right-of-way.
- Disengage the drive to the cutting unit and shut off the engine before adjusting the height of cut (unless you can adjust it from the operating position).
- Never run an engine in an area where exhaust gases are enclosed.
- Never leave a running machine unattended.
- Before leaving the operating position (including to empty the catchers or to unclog the chute), do the following:
  - Stop the machine on level ground.
  - Disengage the power take-off and lower the attachments.
  - Engage the parking brake.
  - Shut off the engine and remove the key.
  - Wait for all moving parts to stop.
- Do not operate the machine when there is the risk of lightning.
- Do not use the machine as a towing vehicle.
- Do not change the governor speed or overspeed the engine.
- Use accessories and attachments approved by Toro only.

Slope Safety

- Slow down the machine and use extra care on hillsides. Travel up and down on hillsides. Turf conditions can affect the stability of the machine.
- Avoid turning the machine on slopes. If you must turn the machine, turn it slowly and gradually downhill, if possible.
- Do not turn the machine sharply. Use care when reversing the machine.
- Use extra care while operating the machine with attachments; they can affect the stability of the machine.

Operating the Mower Blade-Control Switch (PTO)

The blade-control switch (PTO) starts and stops the mower blades and any powered attachments.

Engaging the Blade-Control Switch (PTO)

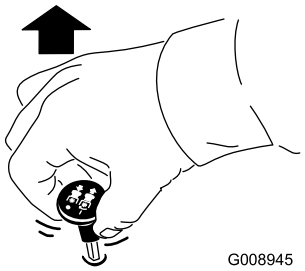

g008945

Figure 19

Note: Always engage the blades with the throttle in the FAST position (Figure 20).

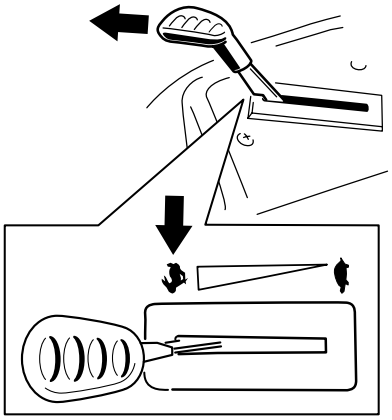

g187516

Figure 20

Disengaging the Blade-Control Switch (PTO)

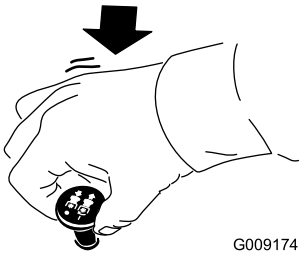

g009174

Figure 21

Operating the Throttle

You can move the throttle control between the FAST and SLOW positions (Figure 22).

Always use the FAST position when turning on the mower deck with the blade-control switch (PTO).

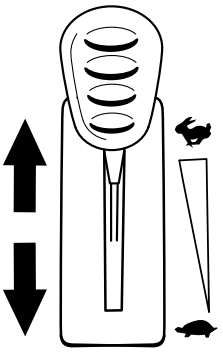

g187517

Figure 22

Operating the Choke

Use the choke to start a cold engine.

1. If the engine is cold, use the choke to start the engine.
2. Pull up the choke knob to engage the choke before using the ignition switch (Figure 23).

   Note: Ensure that you fully engage the choke. You may need to hold the knob up when you use the ignition switch.
3. Push down the choke to disengage the choke after the engine has started (Figure 23).

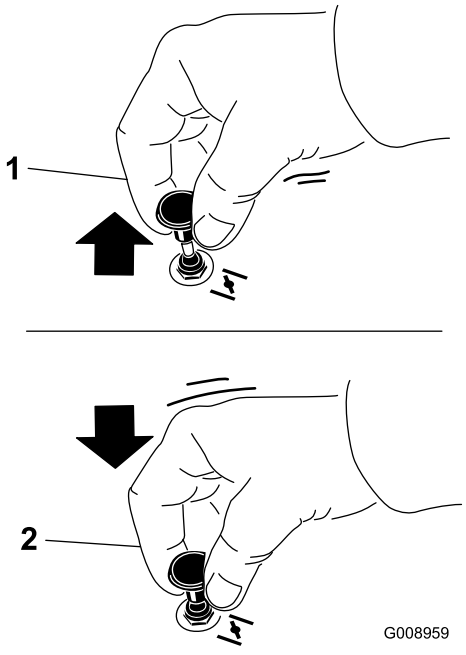

g008959

Figure 23

1. On position
2. Off position

Operating the Ignition Switch

1. Turn the ignition key to the START position (Figure 24).

   Note: When the engine starts, release the key.

   Important: Do not engage the starter for more than 5 seconds at a time. If the engine fails to start, wait 15 seconds between attempts. Failure to follow these instructions can burn out the starter motor.

   Note: You may need multiple attempts to start the engine when you start it the first time after the fuel system has been without fuel completely.

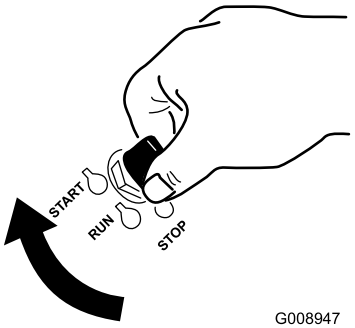

g008947

Figure 24

2. Turn the ignition key to the STOP position to shut off the engine.

Starting and Shutting Off the Engine

Starting the Engine

Note: A warm or hot engine may not require choking.

Important: Do not engage the starter for more than 5 seconds at a time. Engaging the starter motor for more than 5 seconds can damage the starter motor. If the engine fails to start, wait 10 seconds before operating the engine starter again.

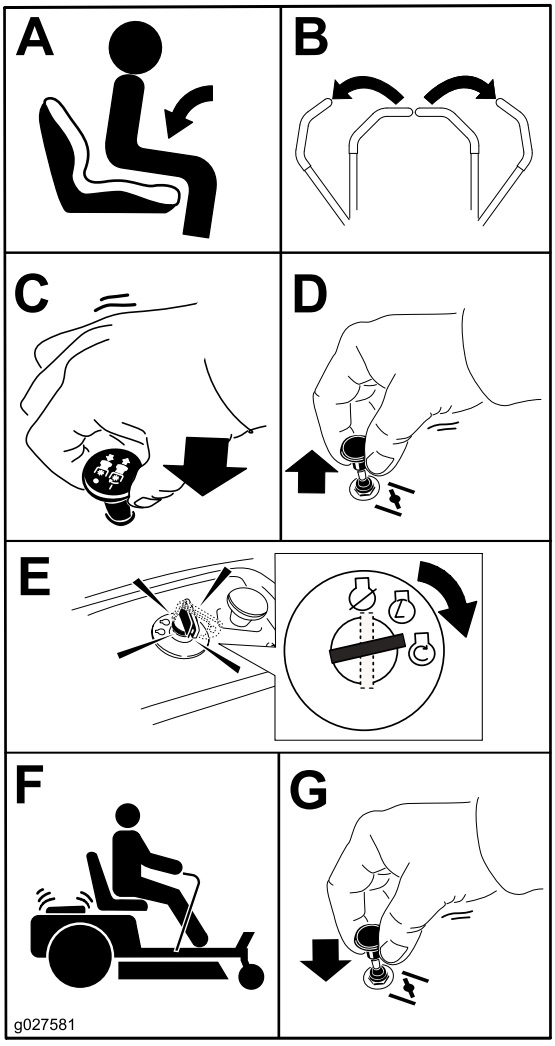

g027581

Figure 25

Shutting Off the Engine

1. Disengage the blades by moving the blade-control switch to the OFF position (Figure 23).
2. Move the throttle lever to the FAST position.
3. Turn the ignition key to the OFF position and remove the key.

Using the Motion-Control Levers

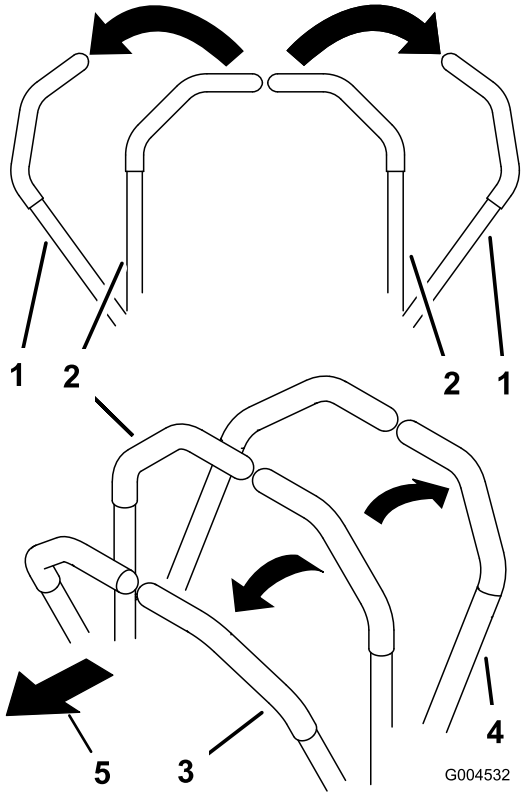

g004532

Figure 26

1. Motion-control lever—PARK position
2. Center, unlocked position
3. Forward
4. Backward
5. Front of machine

Driving the Machine

The drive wheels turn independently, powered by hydraulic motors on each axle. You can turn 1 side in reverse while you turn the other forward, causing the machine to spin rather than turn. This greatly improves the machine maneuverability but may require sometime for you to adapt to how it moves.

The throttle control regulates the engine speed as measured in rpm (revolutions per minute). Place the throttle control in the FAST position for best performance. Always operate in the full throttle position when mowing.

⚠ WARNING

The machine can spin very rapidly. You may lose control of the machine and cause personal injury or damage to the machine.

- **Use caution when making turns.**
- **Slow the machine down before making sharp turns.**

Driving Forward

Note: Always use caution when backing up and turning.

1. Move the levers to the center, unlocked position.
2. To go forward, slowly push the motion-control levers forward (Figure 27).

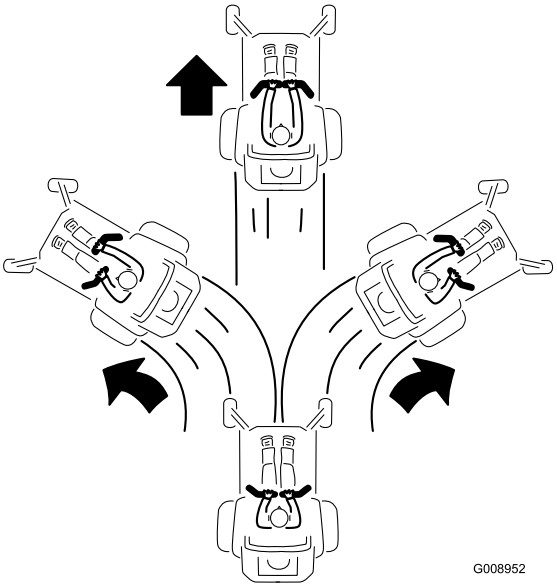

g008952

Figure 27

Driving Backward

1. Move the levers to the center, unlocked position.
2. To go backward, slowly pull the motion-control levers rearward (Figure 28).

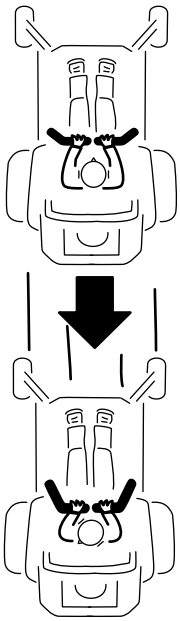

g008953

Figure 28

Using the Smart Speed™ Control System

The Smart Speed ™ Control-System lever, located below the operating position (Figure 29), gives the operator a choice to drive the machine at 3 ground speed ranges—trim, tow, and mow.

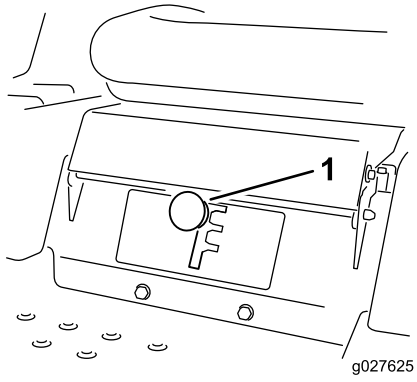

g027625

Figure 29

1. Smart-speed lever

To change speeds, do the following:

1. Move the motion-control levers to neutral and outward to the PARK position.
2. Disengage the blade-control switch.
3. Adjust the lever to the desired position.

The following are only recommendations for use. Adjustments vary by grass type, moisture content, and the height of the grass.

Suggested uses:	Trim	Tow	Mow
Parking	X		
Heavy, wet grass	X		
Training	X		
Bagging		X	
Mulching		X	
Normal mowing			X
Transport			X

Trim

This is the lowest speed. The suggested uses for this speed are as follows:

- Parking
- Heavy, wet grass mowing conditions
- Training

Tow

This is the medium speed. The suggested uses for this speed are as follows:

- Bagging
- Mulching

Mow

This is the fastest speed. The suggested uses for this speed are as follows:

- Normal mowing
- Transporting the machine

Stopping the Machine

To stop the machine, move the motion-control levers to NEUTRAL and outward to the PARK position, disengage the blade-control switch, ensure that the throttle is in the FAST position, and turn the ignition key to OFF. Remove the key from the ignition switch.

⚠ WARNING

Children or bystanders may be injured if they move or attempt to operate the mower while it is unattended.

Always remove the ignition key and move the motion-control levers outward to the PARK position when leaving the machine unattended, even if just for a few minutes.

Adjusting the Height of Cut

Note: The transport position is the highest height-of-cut position at 115 mm (4-1/2 inches) as shown in Figure 30.

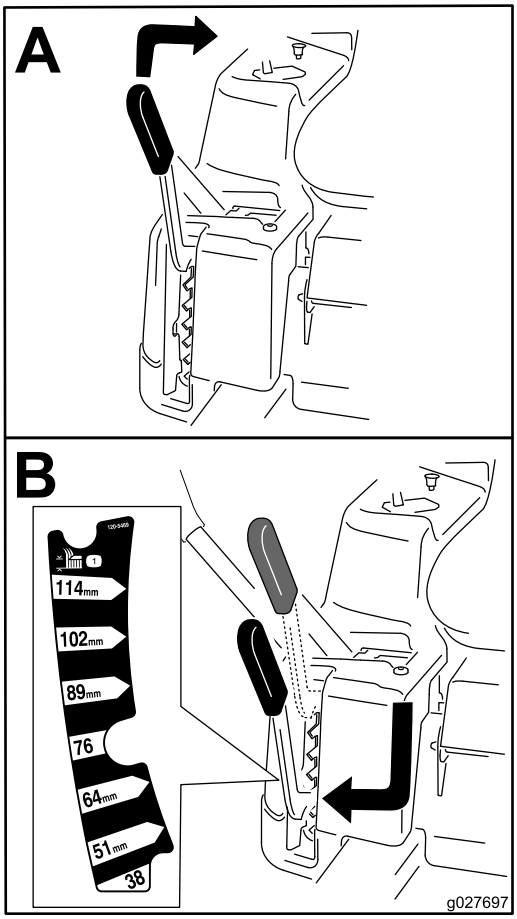

g027697

Figure 30

Adjusting the Anti-Scalp Rollers

For Machines with 107 cm (42-inch) Mower Decks

Whenever you change the height of cut, adjust the height of the anti-scalp rollers.

Note: Adjust the anti-scalp rollers so the rollers do not touch the ground in normal, flat mowing areas.

1. Park the machine on a level surface and disengage the blade-control switch.
2. Ensure that the parking brake is engaged, shut off the engine, remove the key, and wait for all moving parts to stop before leaving the operating position.
3. Adjust the anti-scalp rollers to 1 of the following positions:
   - Upper hole—use this position with the mower deck in the 63 mm (2-1/2 inch) and below the height-of-cut positions (Figure 31).
   - Lower hole—use this position with the mower deck in the 76 mm (3 inch) and above the height-of-cut positions (Figure 31).

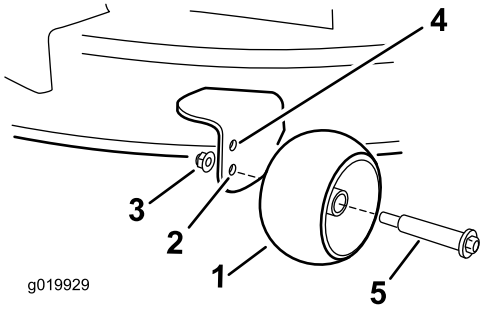

g019929

Figure 31

1. Anti-scalp roller
2. Lower hole—the mower deck in the 76 mm (3 inch) and above the height-of-cut positions
3. Flange nut
4. Upper hole—the mower deck in the 63 mm (2-1/2 inch) and below the height-of-cut positions
5. Bolt

For Machines with 127 cm (50-inch) Mower Decks

Whenever you change the height of cut, adjust the height of the anti-scalp rollers.

Note: Adjust the anti-scalp rollers so the rollers do not touch the ground in normal, flat mowing areas.

1. Park the machine on a level surface and disengage the blade-control switch.

2. Ensure that the parking brake is engaged, shut off the engine, remove the key, and wait for all moving parts to stop before leaving the operating position.
3. Adjust the anti-scalp rollers (Figure 32) to match the closest height-of-cut position.

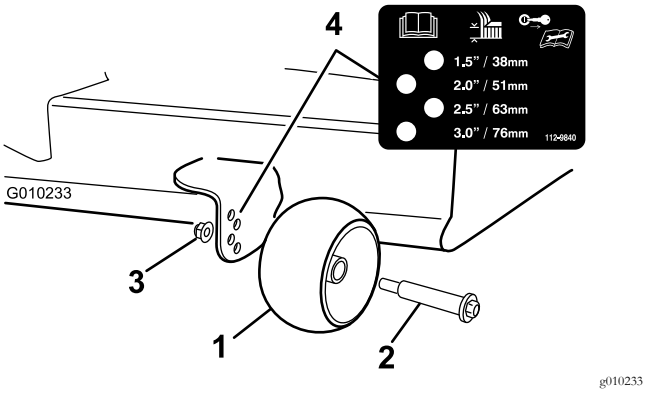

Figure 32

1. Anti-scalp roller
2. Bolt
3. Flange nut
4. Hole spacing

Using the Side Discharge

The mower has a hinged grass deflector that disperses clippings to the side and down toward the turf.

⚠ DANGER

Without a grass deflector, discharge cover, or a complete grass-catcher assembly mounted in place, you and others are exposed to blade contact and thrown debris. Contact with rotating mower blade(s) and thrown debris will cause injury or death.

- **Never remove the grass deflector from the mower because the grass deflector routes material down toward the turf. If the grass deflector is ever damaged, replace it immediately.**
- **Never put your hands or feet under the mower.**
- **Never try to clear the discharge area or mower blades unless you move the blade-control switch (PTO) to the OFF position, rotate the ignition key to the OFF position, and remove the key.**
- **Make sure that the grass deflector is in the down position.**

Operating Tips

Using the Fast Throttle Setting

For best mowing and maximum air circulation, operate the engine at the FAST position. Air is required to thoroughly cut grass clippings, so do not set the height-of-cut so low as to totally surround the mower in uncut grass. Always try to have 1 side of the mower free from uncut grass, which allows air to be drawn into the mower.

Cutting a Lawn for the First Time

Cut grass slightly longer than normal to ensure that the cutting height of the mower does not scalp any uneven ground. However, the cutting height used in the past is generally the best one to use. When cutting grass longer than 15 cm (6 inches) tall, you may want to cut the lawn twice to ensure an acceptable quality of cut.

Cutting a Third of the Grass Blade

It is best to cut only about a third of the grass blade. Cutting more than that is not recommended unless grass is sparse, or it is late fall when grass grows more slowly.

Alternating the Mowing Direction

Alternate the mowing direction to keep the grass standing straight. This also helps disperse clippings which enhances decomposition and fertilization.

Mowing at Correct Intervals

Grass grows at different rates at different times of the year. To maintain the same cutting height, mow more often in early spring. As the grass growth rate slows in mid summer, mow less frequently. If you cannot mow for an extended period, first mow at a high cutting height, then mow again 2 days later at a lower height setting.

Using a Slower Cutting Speed

To improve cut quality, use a slower ground speed in certain conditions.

Avoiding Cutting Too Low

When mowing uneven turf, raise the cutting height to avoid scalping the turf.

Stopping the Machine

If you must stop the forward motion of the machine while mowing, a clump of grass clippings may drop onto your lawn. To avoid this, move onto a previously cut area with the blades engaged or you can disengage the mower deck while moving forward.

Keeping the Underside of the Mower Clean

Clean clippings and dirt from the underside of the mower after each use. If grass and dirt build up inside the mower, cutting quality will eventually become unsatisfactory.

Maintaining the Blade(s)

Maintain a sharp blade throughout the cutting season because a sharp blade cuts cleanly without tearing or shredding the grass blades. Tearing and shredding turns grass brown at the edges, which slows growth and increases the chance of disease. Check the mower blades after each use for sharpness, and for any wear or damage. File down any nicks and sharpen the blades as necessary. If a blade is damaged or worn, replace it immediately with a genuine Toro replacement blade.

After Operation

After Operation Safety

General Safety

- Clean grass and debris from the cutting units, mufflers, and engine compartment to help prevent fires. Clean up oil or fuel spills.
- Shut off the fuel before storing or transporting the machine.
- Disengage the drive to the attachment whenever you are transporting or not using the machine.
- Use full-width ramps for loading the machine into a trailer or truck.
- Tie the machine down securely using straps, chains, cable, or ropes. Both front and rear straps should be directed down and outward from the machine.
- Allow the engine to cool before storing the machine in any enclosure.
- Shut off the fuel before storing or transporting the machine.
- Never store the machine or fuel container where there is an open flame, spark, or pilot light, such as on a water heater or on other appliances.

Pushing the Machine by Hand

Important: Always push the machine by hand. Do not tow the machine, because damage to the hydraulic drive system may occur.

This machine has an electric-brake mechanism. To push the machine, turn the ignition key to the RUN position. The battery must be charged and functioning to disengage the electric brake.

Pushing the Machine

1. Park the machine on a level surface and disengage the blade-control switch.
2. Move the motion-control levers outward to the PARK position, shut off the engine, and wait for all moving parts to stop before leaving the operating position.
3. Locate the bypass levers on the frame on both sides of the engine.
4. Move the bypass levers forward through the key hole and down to lock them in place (Figure 33).

   Note: Do this for each lever.
5. Move the motion-control levers inward to the NEUTRAL position and turn the ignition key to the RUN position.

   Note: Do not start the machine.

   Note: You can now push the machine by hand.

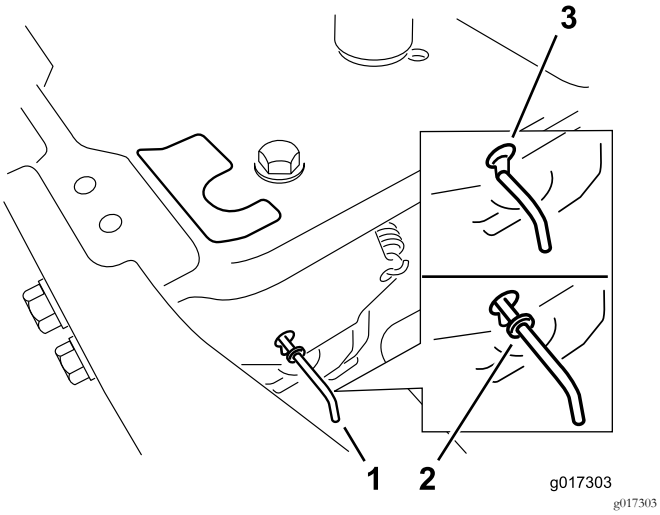

Figure 33

1. Bypass-lever locations
2. Lever position for operating the machine
3. Lever position for pushing the machine

6. When finished, turn the key to the STOP position to avoid draining the battery charge.

Note: If the machine fails to move, the electric brake may still be engaged. You can release the electric brake if necessary; refer to Releasing the Electric Brake (page 41).

Operating the Machine

Move the bypass levers rearward through the key hole and down to lock them in place as shown in Figure 33.

Note: Do this for each lever.

Transporting the Machine

Use a heavy-duty trailer or truck to transport the machine. Ensure that the trailer or truck has all necessary brakes, lighting, and marking as required by law. Please carefully read all the safety instructions. Knowing this information could help you, your family, pets, or bystanders avoid injury.

⚠ WARNING

Driving on the street or roadway without turn signals, lights, reflective markings, or a slow-moving-vehicle emblem is dangerous and can lead to accidents, causing personal injury.

Do not drive the machine on a public street or roadway.

1. If you are using a trailer, connect it to the towing vehicle and connect the safety chains.
2. If applicable, connect the trailer brakes.
3. Load the machine onto the trailer or truck.
4. Shut off the engine, remove the key, set the brake, and close the fuel valve.
5. Tie down the machine near the front caster wheels and the rear bumper (Figure 34).

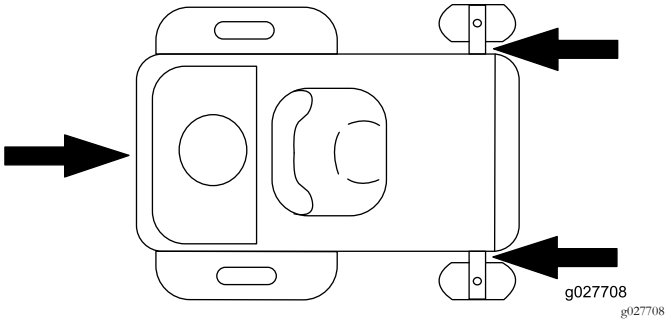

Figure 34

Loading the Machine

Use extreme caution when loading or unloading machines onto a trailer or a truck. Use a full-width ramp that is wider than the machine for this procedure. Back up the ramp and drive forward down the ramp (Figure 35).

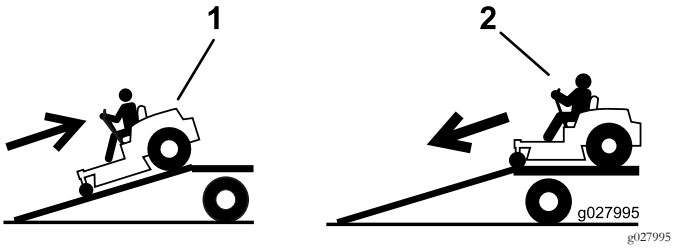

Figure 35

1. Back the machine up the ramp.
2. Drive the machine forward down the ramp.

Important: **Do not use narrow individual ramps for each side of the machine.**

⚠ WARNING

Loading a machine onto a trailer or truck increases the possibility of tip-over and could cause serious injury or death (Figure 37).

- **Use extreme caution when operating a machine on a ramp.**
- **Use only a full-width ramp; do not use individual ramps for each side of the machine.**
- **Do not exceed a 15-degree angle between the ramp and the ground or between the ramp and the trailer or truck.**
- **Ensure that the length of ramp is at least 4 times as long as the height of the trailer or truck bed to the ground. This ensures that the ramp angle does not exceed 15 degrees on flat ground.**
- **Back up ramps and drive forward down ramps.**
- **Avoid sudden acceleration or deceleration while driving the machine on a ramp as this could cause a loss of control or a tip-over situation.**

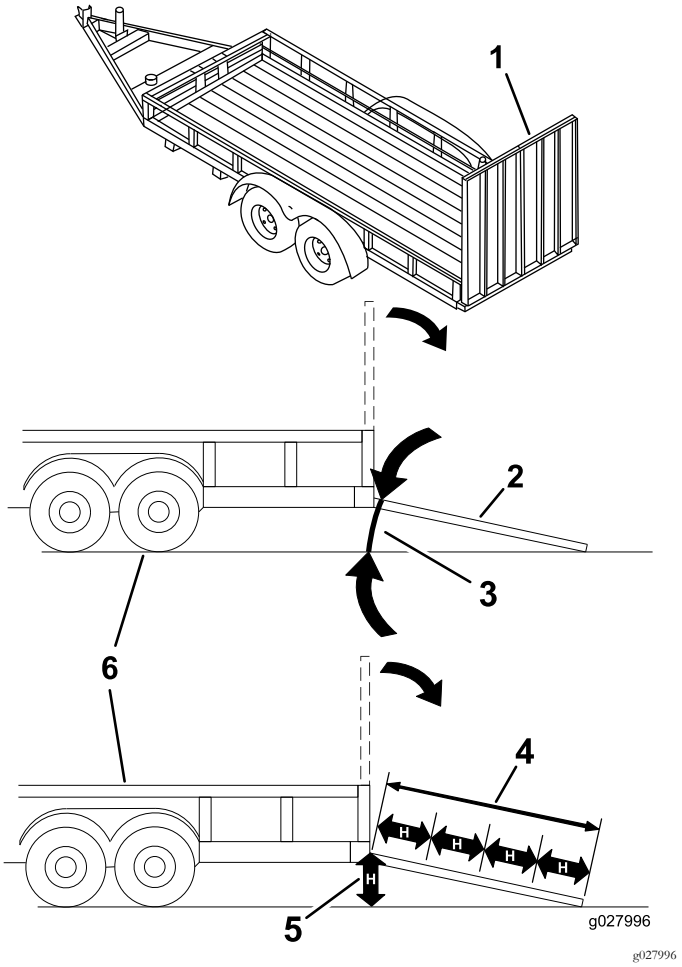

Figure 36

1. Full-width ramp in stowed position
2. Side view of full-width ramp in loading position
3. Not greater than 15 degrees
4. Ramp is at least 4 times as long as the height of the trailer or truck bed to the ground
5. H=height of the trailer or truck bed to the ground
6. Trailer

Maintenance

Note: Determine the left and right sides of the machine from the normal operating position.

Recommended Maintenance Schedule(s)

Maintenance Service Interval	Maintenance Procedure
After the first 5 hours	• Change the engine oil.
Before each use or daily	• Check the safety-interlock system. • Check the air cleaner for dirty, loose, or damaged parts. • Check the engine-oil level. • Clean the air intake screen. • Inspect the blades. • Inspect the grass deflector for damage.
After each use	• Clean the mower-deck housing.
Every 25 hours	• Grease all lubrication points. • Clean the air-cleaner foam element (more often in dusty, dirty conditions). • Check tire pressure. • Check the belts for wear or cracks.
Every 100 hours	• Replace the air-cleaner foam element (more often in dusty, dirty conditions). • Service the air-cleaner paper element (more often in dusty, dirty conditions). • Change the engine oil (more often in dusty, dirty conditions). • Change the oil filter (more often in dusty, dirty conditions). • Check the spark plug(s). • Check the in-line fuel filter.
Every 200 hours	• Replace the air-cleaner paper element (more often in dusty, dirty conditions). • Replace the spark plug(s). • Replace the in-line fuel filter.
Before storage	• Charge the battery and disconnect the battery cables. • Perform all maintenance procedures listed above before storage. • Paint any chipped surfaces.

⚠ CAUTION

If you leave the key in the ignition switch, someone could accidently start the engine and seriously injure you or other bystanders.

Remove the key from the ignition and disconnect the wire from the spark plug before you do any maintenance. Set the wire aside so that it does not accidentally contact the spark plug.

Pre-Maintenance Procedures

Maintenance and Storage

- Before repairing the machine do the following:
  - Disengage the drives.
  - Engage the parking brake.
  - Shut off the engine and remove the key.
  - Disconnect the spark-plug wire.
- Park the machine on a level surface.
- Clean grass and debris from the cutting unit, drives, mufflers, and engine to help prevent fires.
- Clean up oil or fuel spills.
- Let the engine cool before storing the machine.
- Do not store the machine or fuel near flames or drain the fuel indoors.
- Do not allow untrained personnel to service the machine.
- Use jack stands to support the machine and/or components when required.
- Carefully release pressure from components with stored energy.
- Disconnect the battery or remove the spark-plug wire before making any repairs. Disconnect the negative terminal first and the positive terminal last. Connect the positive terminal first and negative last.
- Use care when checking the blades. Wrap the blade(s) or wear thickly padded gloves, and use caution when servicing them. Only replace blades; do not straighten or weld them.
- Keep hands and feet away from moving parts. If possible, do not make adjustments with the engine running.
- Keep all parts in good working condition and all hardware tightened, especially the blade-attachment bolts. Replace all worn or damaged decals.
- Never interfere with the intended function of a safety device or reduce the protection provided by a safety device. Check their proper operation regularly.
- To ensure optimum performance and continued safety certification of the machine, use only genuine Toro replacement parts and accessories. Replacement parts and accessories made by other manufacturers could be dangerous, and such use could void the product warranty.
- Check the parking brake operation frequently. Adjust and service as required.

Raising the Seat

Make sure that the motion-control levers are locked in the PARK position. Lift the seat forward.

You can access the following components by raising the seat:

- Serial plate
- Service decal
- Seat-adjustment bolts
- Fuel filter
- Battery and battery cables

Releasing the Mower-Deck Curtain

Loosen the 2 bottom bolts of the curtain to access the top of the mower deck (Figure 37).

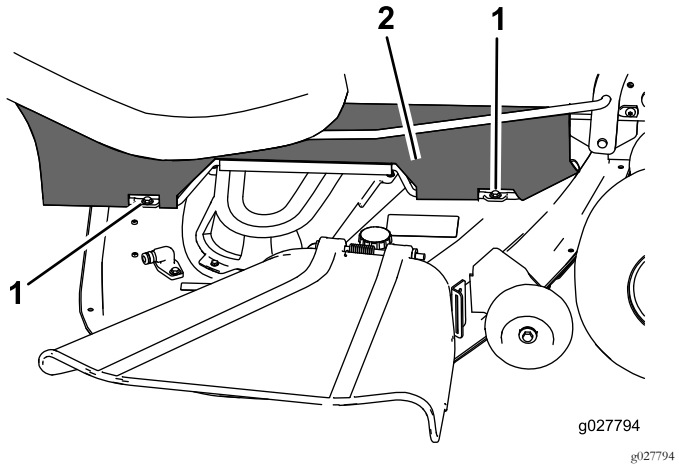

Figure 37

1. Bottom bolt
2. Curtain

Note: Always tighten the bolts to connect the curtain after maintenance.

Lubrication

Greasing the Bearings

Service Interval: Every 25 hours—Grease all lubrication points.

Grease Type: No. 2 lithium grease

1. Park the machine on a level surface and disengage the blade-control switch.
2. Move the motion-control levers outward to the PARK position, shut off the engine, remove the key, and wait for all moving parts to stop before leaving the operating position.
3. Clean the grease fittings (Figure 38 and Figure 39) with a rag.

   Note: Make sure to scrape any paint off the front of the fitting(s).

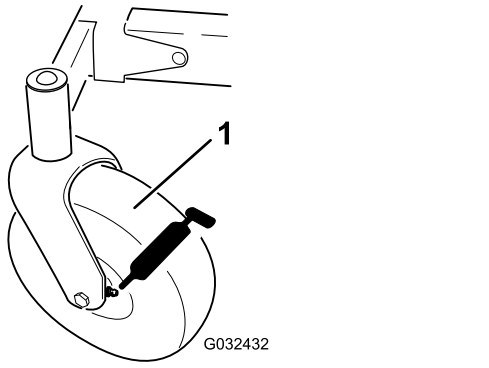

g032432

Figure 38

1. Front caster tire

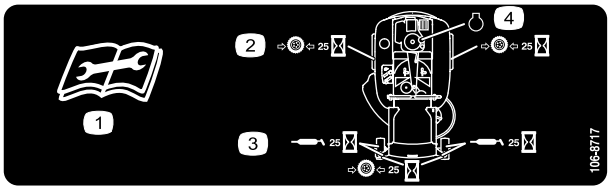

decal106-8717

Figure 39

Located on the seat-pan underside

1. Read the instructions before servicing or performing maintenance.
2. Check the tire pressure every 25 operating hours.
3. Grease every 25 operating hours.
4. Engine

4. Connect a grease gun to each fitting (Figure 38 and Figure 39).
5. Pump grease into the fittings until grease begins to ooze out of the bearings.

Engine Maintenance

Engine Safety

Shut off the engine before checking the oil or adding oil to the crankcase.

Servicing the Air Cleaner

Service Interval: Before each use or daily

Note: Service the air cleaner more frequently (every few hours) if operating conditions are extremely dusty or sandy.

Removing the Elements

1. Park the machine on a level surface and disengage the blade-control switch (PTO).
2. Engage the parking brake, shut off the engine, remove the key, and wait for all moving parts to stop before leaving the operating position.
3. Clean around the air-cleaner cover to prevent dirt from getting into the engine and causing damage.
4. Lift the cover and rotate the air-cleaner assembly out of the engine (Figure 40).

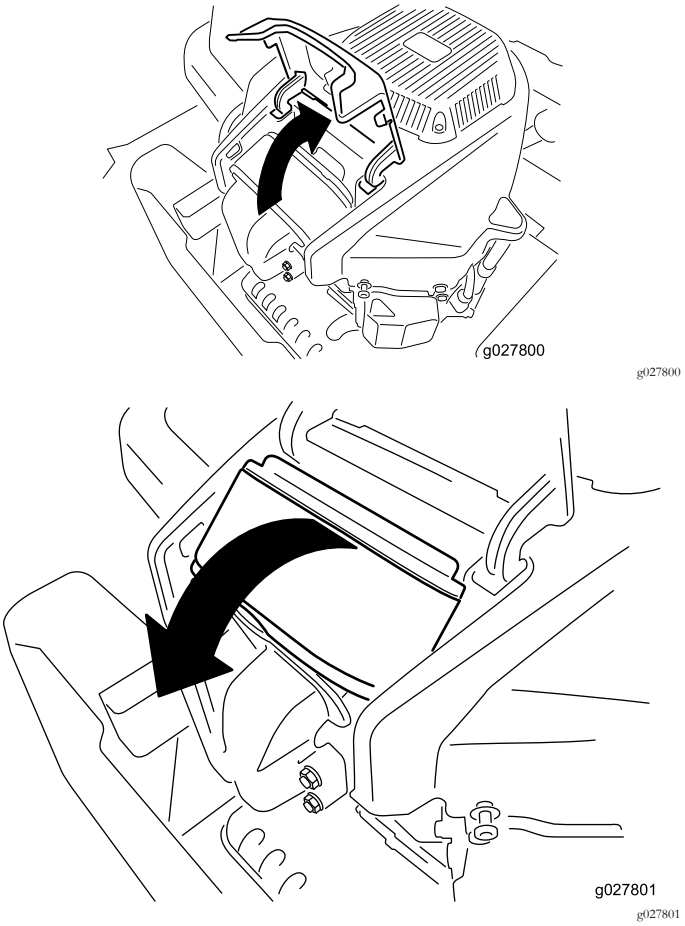

g027800

g027801

Figure 40

5. Remove the foam element from the paper element (Figure 41).

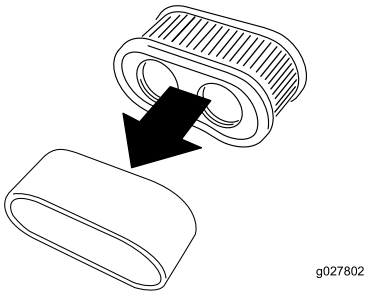

g027802

Figure 41

Servicing the Foam Element

Service Interval: Every 25 hours/Monthly (whichever comes first)—Clean the air-cleaner foam element (more often in dusty, dirty conditions).

Every 100 hours/Yearly (whichever comes first)—Replace the air-cleaner foam element (more often in dusty, dirty conditions).

Wash the foam element with water and replace the foam element if it is damaged.

Servicing the Paper Element

Service Interval: Every 100 hours/Yearly (whichever comes first)—Service the air-cleaner paper element (more often in dusty, dirty conditions).

Every 200 hours/Every 2 years (whichever comes first)—Replace the air-cleaner paper element (more often in dusty, dirty conditions).

1. Lightly tap the element on a flat surface to remove dust and dirt.
2. Inspect the element for tears, an oily film, and damage to the seal.

Important: Do not clean the paper element with pressurized air or liquids, such as solvent, gasoline, or kerosene. Replace the paper element if it is damaged or cannot be cleaned thoroughly.

Servicing the Engine Oil

Oil Type: Detergent oil (API service SF, SG, SH, SJ, or SL)

Crankcase Capacity: with filter—2.4 L (2.5 US qt)

Viscosity: See the table below.

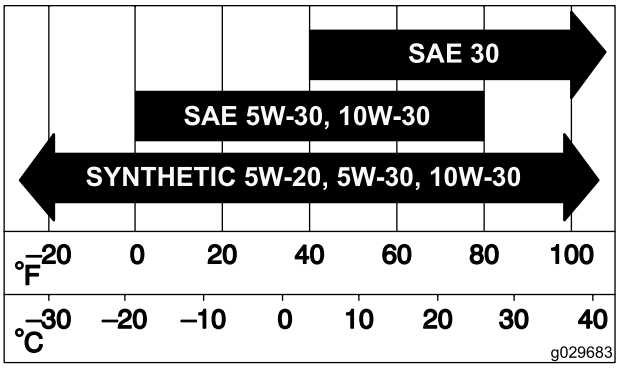

g029683

Figure 42

Checking the Engine-Oil Level

Service Interval: Before each use or daily

Note: Check the oil when the engine is cold.

⚠ WARNING

Contact with hot surfaces may cause personal injury.

Keep your hands, feet, face, clothing, and other body parts away the muffler and other hot surfaces.

Important: If you overfill or underfill the engine crankcase with oil and run the engine, you may damage the engine.

1. Park the machine on a level surface, disengage the blade-control switch, shut off the engine, engage parking brake, and remove the key.
2. Make sure that the engine is shut off, level, and is cool, so that the oil has had time to drain into the sump.
3. To keep dirt, grass clippings, etc., out of the engine, clean the area around the oil-fill cap and dipstick before removing it (Figure 43).
4. Shut off the engine, remove the key, and wait for all moving parts to stop before leaving the operating position.

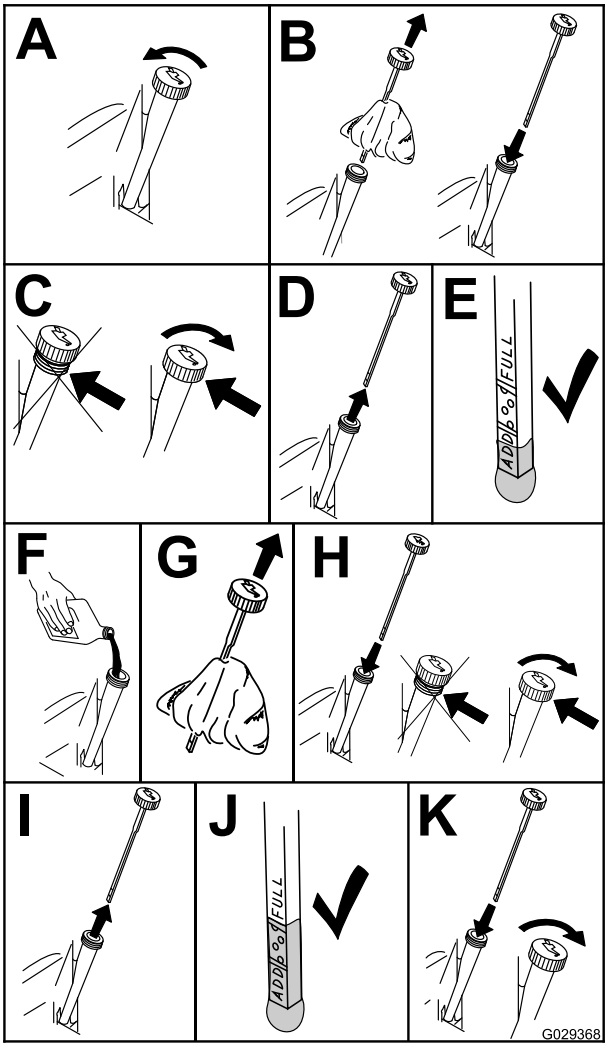

g029368

Figure 43

Changing the Engine Oil and Oil Filter

Service Interval: After the first 5 hours/After the first month (whichever comes first)—Change the engine oil.

Every 100 hours/Yearly (whichever comes first)—Change the engine oil (more often in dusty, dirty conditions).

Every 100 hours/Yearly (whichever comes first)—Change the oil filter (more often in dusty, dirty conditions).

Note: Change the engine-oil filter more frequently when operating conditions are extremely dusty or sandy.

Note: Dispose of the used oil at a recycling center.

1. Park the machine on a level surface to ensure that the oil drains completely.
2. Disengage the PTO and ensure that the parking brake is engaged.
3. Shut off the engine, remove the key, and wait for all moving parts to stop before leaving the operating position.
4. Drain the engine oil.

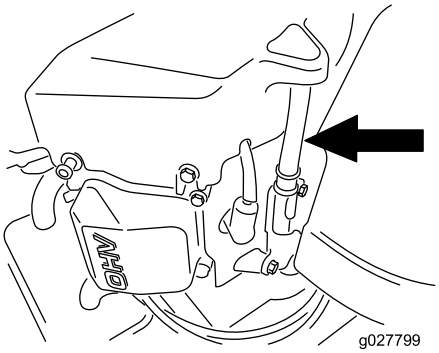

g027799

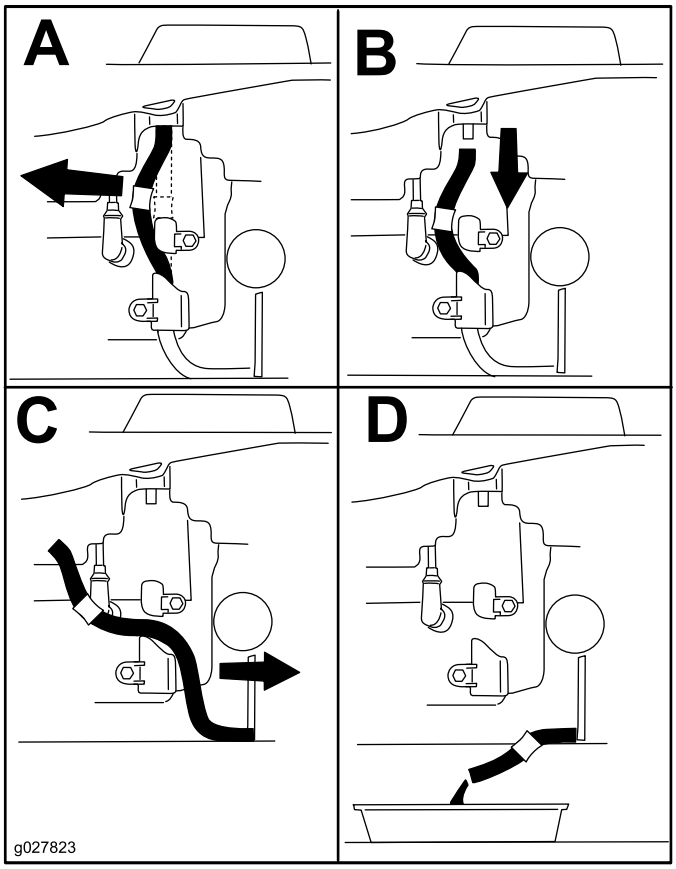

g027823

Figure 44

5. Change the engine-oil filter (Figure 45).

   Note: Ensure that the oil-filter gasket touches the engine and then turn the filter an extra 3/4 turn.

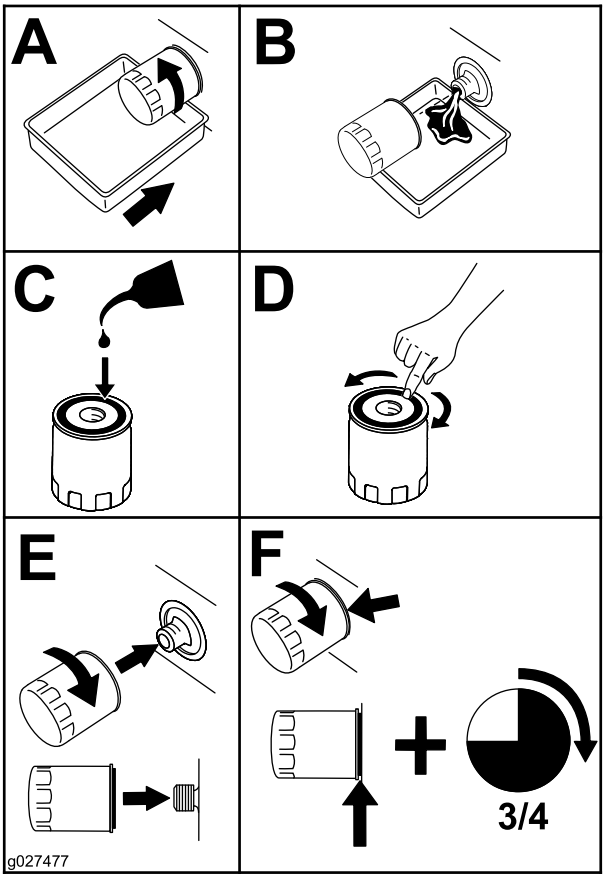

g027477

Figure 45

6. Slowly pour approximately 80% of the specified oil into the filler tube and slowly add the additional oil to bring it to the **Full** mark (Figure 46).

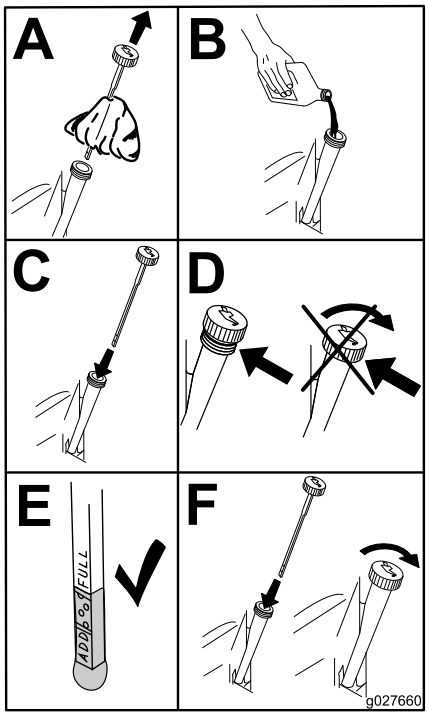

g027660

Figure 46

Servicing the Spark Plug

Service Interval: Every 100 hours/Yearly (whichever comes first)—Check the spark plug(s).

Every 200 hours/Every 2 years (whichever comes first)—Replace the spark plug(s).

Make sure that the air gap between the center and side electrodes is correct before installing the spark plug. Use a spark-plug wrench for removing and installing the spark plug(s) and a gapping tool/feeler gauge to check and adjust the air gap. Install a new spark plug(s) if necessary.

Type: Champion® RN9YC or NGK® BPR6ES

Air gap: 0.76 mm (0.03 inch)

Removing the Spark Plug

1. Disengage the PTO and move the motion-control levers to the PARK position.
2. Shut off the engine, remove the key, and wait for all moving parts to stop before leaving the operating position.

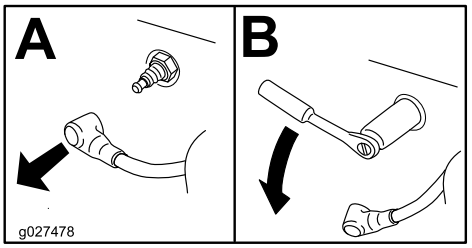

g027478

Figure 47

Note: Due to the deep recess around the spark plug, blowing out the cavity with compressed air is the most effective method for cleaning. The spark plug is most accessible when the blower housing is removed for cleaning.

Checking the Spark Plug

Important: Do not clean the spark plug(s). Always replace the spark plug(s) when it has: a black coating, worn electrodes, an oily film, or cracks.

If you see light brown or gray on the insulator, the engine is operating properly. A black coating on the insulator usually means the air cleaner is dirty.

Set the gap to 0.76 mm (0.03 inch).

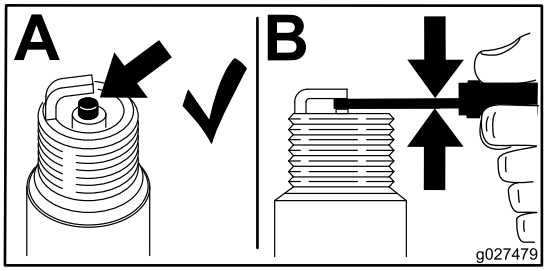

g027479

Figure 48

Installing the Spark Plug

Tighten the spark plug(s) to 25 to 30 N·m (18.5 to 22.1 ft-lb).

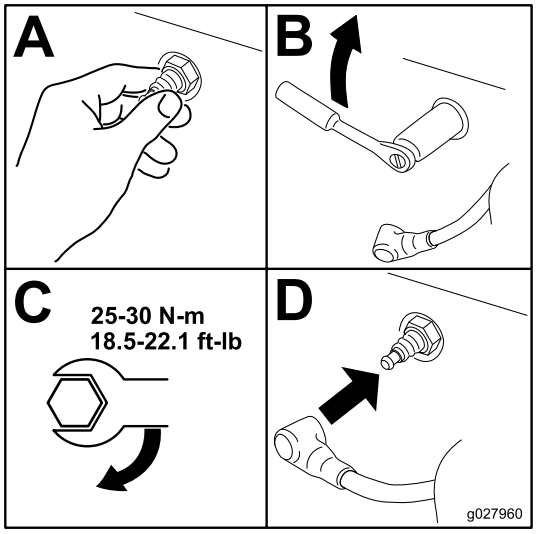

g027960

Figure 49

Cleaning the Cooling System

Clean the air intake screen from grass and debris before each use.

1. Disengage the blade-control switch and move the motion-control levers to the PARK position.
2. Shut off the engine, remove the key, and wait for all moving parts to stop before leaving the operating position.
3. Remove the air filter from the engine.
4. Remove the engine shroud.
5. To prevent debris entering the air intake, install the air filter to the filter base.
6. Clean debris and grass from the parts.
7. Remove the air filter and install the engine shroud.
8. Install the air filter.

Fuel System Maintenance

⚠ DANGER

In certain conditions, fuel is extremely flammable and highly explosive. A fire or explosion from fuel can burn you, others, and can damage property.

- **Perform any fuel-related maintenance when the engine is cold. Do this outdoors in an open area. Wipe up any fuel that spills.**
- **Never smoke when draining fuel, and stay away from an open flame or where a spark may ignite the fuel fumes.**

Replacing the In-Line Fuel Filter

Service Interval: Every 100 hours/Yearly (whichever comes first)—Check the in-line fuel filter.

Every 200 hours/Every 2 years (whichever comes first)—Replace the in-line fuel filter.

Never install a dirty filter if it is removed from the fuel line.

1. Park the machine on a level surface and disengage the blade-control switch.
2. Ensure that the brake is engaged, shut off the engine, remove the key, and wait for all moving parts to stop before leaving the operating position.

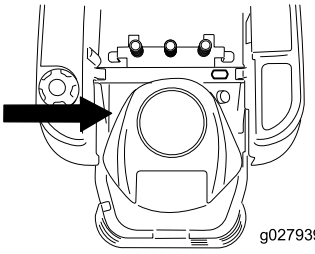

g027939

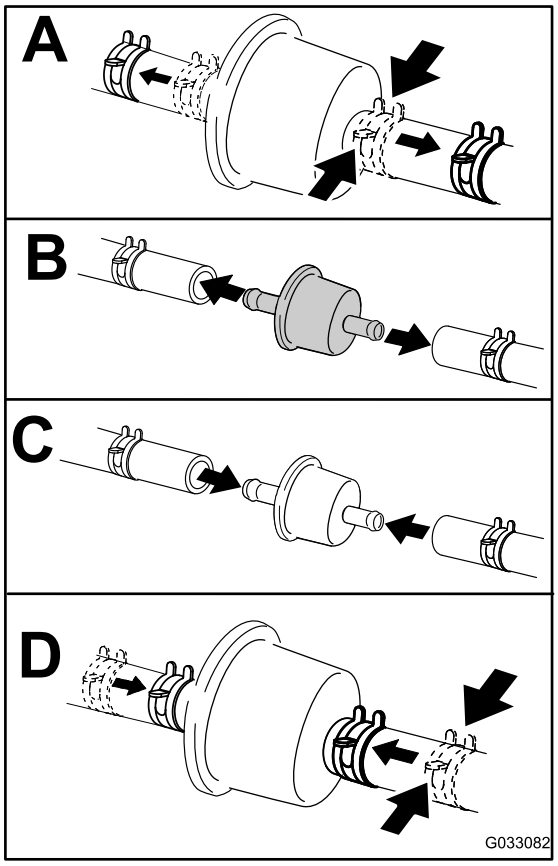

g033082

Figure 50

Electrical System Maintenance

Electrical System Safety

- Disconnect the battery before repairing the machine. Disconnect the negative terminal first and the positive last. Connect the positive terminal first and the negative last.
- Charge the battery in an open, well-ventilated area, away from sparks and flames. Unplug the charger before connecting or disconnecting the battery. Wear protective clothing and use insulated tools.

WARNING

CALIFORNIA
Proposition 65 Warning

Battery posts, terminals, and related accessories contain lead and lead compounds, chemicals known to the State of California to cause cancer and reproductive harm. Wash hands after handling.

Servicing the Battery

Removing the Battery

⚠ WARNING

Battery terminals or metal tools could short against metal machine components causing sparks. Sparks can cause the battery gasses to explode, resulting in personal injury.

- **When removing or installing the battery, do not allow the battery terminals to touch any metal parts of the machine.**
- **Do not allow metal tools to short between the battery terminals and metal parts of the machine.**

1. Park the machine on a level surface and disengage the blade-control switch.
2. Move the motion-control levers outward to the PARK position, shut off the engine, remove the key, and wait for all moving parts to stop before leaving the operating position.
3. Raise the seat to access the battery.
4. Disconnect the negative (black) ground cable from the battery post (Figure 51).

   Note: Retain all fasteners.

⚠ WARNING

Incorrect battery-cable routing could damage the machine and cables causing sparks. Sparks can cause the battery gasses to explode, resulting in personal injury.

- **Always disconnect the negative (black) battery cable before disconnecting the positive (red) cable.**
- **Always connect the positive (red) battery cable before connecting the negative (black) cable.**

5. Slide the rubber cover up the positive (red) cable.
6. Disconnect the positive (red) cable from the battery post (Figure 51).

   Note: Retain all fasteners.
7. Remove the battery hold-down (Figure 51), and lift the battery from the battery tray.

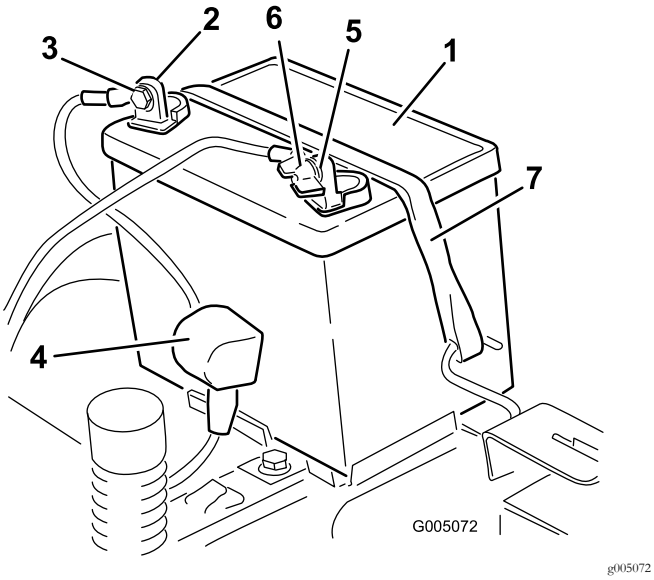

Figure 51

1. Battery
2. Positive (+) battery post
3. Bolt, washer, and nut
4. Terminal boot
5. Negative (–) battery post
6. Wing nut, washer, and bolt
7. Battery hold-down

Charging the Battery

Service Interval: Before storage—Charge the battery and disconnect the battery cables.

1. Remove the battery from the chassis; refer to Removing the Battery (page 38).
2. Charge the battery for a minimum of 1 hour at 6 to 10 A.

   Note: Do not overcharge the battery.
3. When the battery is fully charged, unplug the charger from the electrical outlet, then disconnect the charger leads from the battery posts (Figure 52).

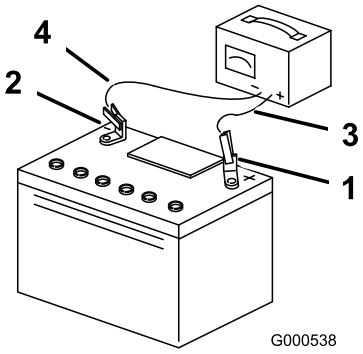

Figure 52

1. Positive (+) battery post
2. Negative (–) battery post
3. Red (+) charger lead
4. Black (–) charger lead

Installing the Battery

1. Position the battery in the tray (Figure 51).
2. Using the fasteners previously removed, install the positive (red) battery cable to the positive (+) battery terminal.
3. Using the fasteners previously removed, install the negative battery cable to the negative (-) battery terminal.
4. Slide the red terminal boot onto the positive (red) battery post.
5. Secure the battery with the hold-down (Figure 51).
6. Lower the seat.

Servicing the Fuses

The electrical system is protected by fuses. It requires no maintenance; however, if a fuse blows, check the component/circuit for a malfunction or short.

Fuse type:

- Main—F1 (30 A, blade-type)
- Charge Circuit—F2 (25 A, blade-type)

1. Remove the screws securing the control panel to the machine.

   Note: Retain all fasteners.

2. Lift the control pane up to access the main wire harness and fuse block (Figure 53).
3. To replace a fuse, pull out on the fuse to remove it (Figure 53).

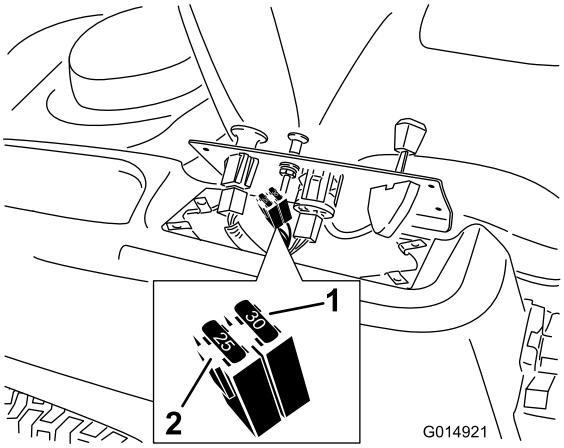

g014921

Figure 53

1. Main (30 A)
2. Charge circuit (25 A)

4. Return the control panel to its original position.

   Note: Use the screws removed previously to secure the panel to the machine.

Drive System Maintenance

Checking the Tire Pressure

Service Interval: Every 25 hours—Check tire pressure.

Maintain the air pressure in the front and rear tires as specified. Uneven tire pressure can cause uneven cut. Check the pressure at the valve stem (Figure 54). Check the tires when they are cold to get the most accurate pressure reading.

Refer to the maximum pressure suggested by the tire manufacturer on the sidewall of the caster wheel tires.

Inflate the rear drive wheel tires to 90 kPa (13 psi).

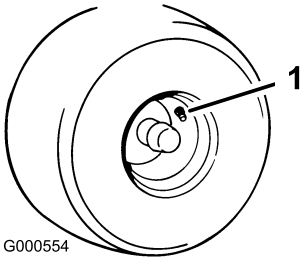

g000554

Figure 54

1. Valve stem

Releasing the Electric Brake

You can manually release the electric brake by rotating the link arms forward. Once the electric brake is energized, the brake resets.

1. Turn the ignition key to the OFF position or disconnect the battery.
2. Locate the shaft on the electric brake where the brake link arms are connected (Figure 55).
3. Rotate the shaft forward to release the brake.

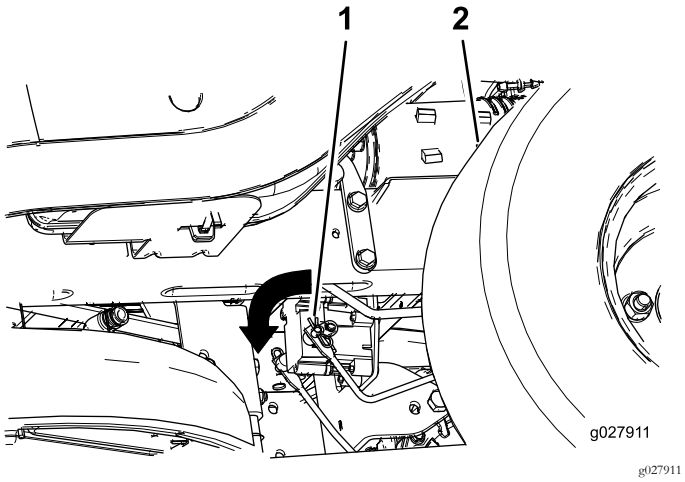

Figure 55

1. Brake-link arm on the electric brake control module
2. Left, rear tire

Mower Maintenance

Servicing the Cutting Blades

To ensure a superior quality of cut, keep the blades sharp. For convenient sharpening and replacement, keep extra blades on hand.

Blade Safety

A worn or damaged blade can break, and a piece of the blade could be thrown at you or bystanders, resulting in serious personal injury or death. Trying to repair a damaged blade may result in discontinued safety certification of the product.

- Inspect the blades periodically for wear or damage.
- Use care when checking the blades. Wrap the blades or wear gloves, and use caution when servicing the blades. Only replace or sharpen the blades; never straighten or weld them.
- On multi-bladed machines, take care as rotating 1 blade can cause other blades to rotate.

Before Inspecting or Servicing the Blades

1. Park the machine on a level surface, disengage the blade-control switch (PTO), and move the motion-control levers outward to the PARK position.
2. Shut off the engine, remove the key, and disconnect the spark-plug wires from the spark plugs.

Inspecting the Blades

Service Interval: Before each use or daily

1. Inspect the cutting edges (Figure 56).
2. If the edges are not sharp or have nicks, remove and sharpen the blade; refer to Sharpening the Blades (page 43).
3. Inspect the blades, especially in the curved area.
4. If you notice any cracks, wear, or a slot forming in this area, immediately install a new blade (Figure 56).

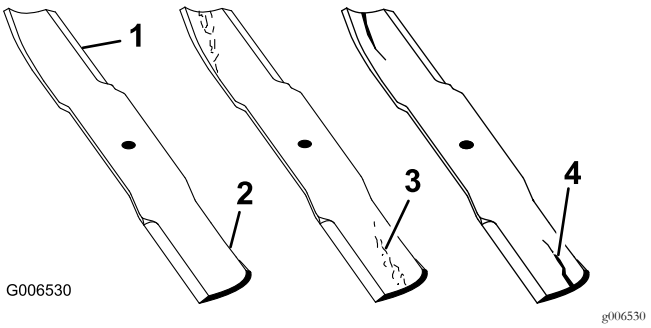

Figure 56

1. Cutting edge
2. Curved area
3. Wear/slot forming
4. Crack

Checking for Bent Blades

Note: The machine must be on a level surface for the following procedure.

1. Raise the mower deck to the highest height-of-cut position.
2. While wearing thickly padded gloves, or other adequate hand protection, slowly rotate the blade to be measure into a position that allows effective measurement of the distance between the cutting edge and the level surface the machine is on (Figure 57).

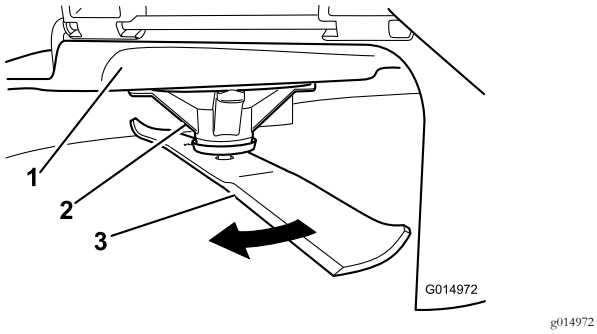

g014972

Figure 57

1. Deck
2. Spindle housing
3. Blade

3. Measure from the tip of the blade to the flat surface (Figure 58).

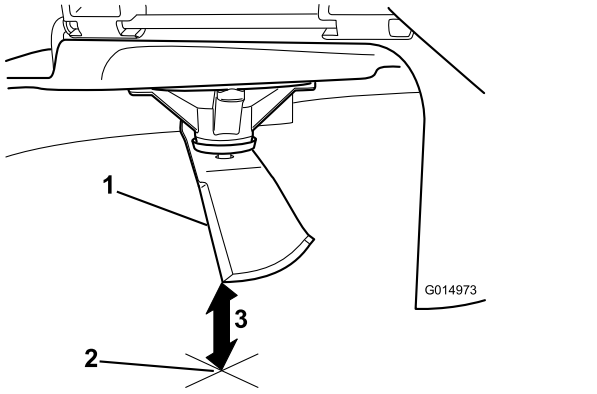

g014973

Figure 58

1. Blade (in position for measuring)
2. Level surface
3. Measured distance between blade and the surface (A)

4. Rotate the same blade 180 degrees so that the opposing cutting edge is now in the same position (Figure 59).

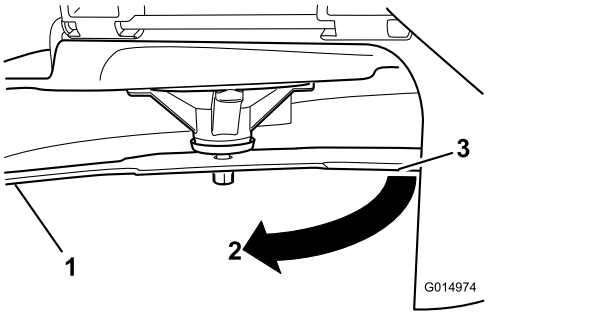

g014974

Figure 59

1. Blade (side previously measured)
2. Measurement (position used previously)
3. Opposing side of blade being moved into measurement position

5. Measure from the tip of the blade to the flat surface (Figure 60).

   Note: The variance should be no more than 3 mm (1/8 inch).

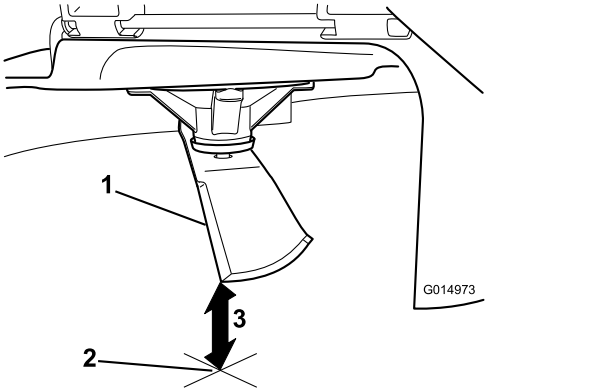

g014973

Figure 60

1. Opposite blade edge (in position for measuring)
2. Level surface
3. Second measured distance between blade and surface (B)

   A. If the difference between A and B is greater than 3 mm (1/8 inch), replace the blade with a new blade; refer to Removing the Blades (page 43) and Installing the Blades (page 43).

      Note: If a bent blade is replaced with a new blade, and the dimension obtained continues to exceed 3 mm (1/8 inch), the blade spindle could be bent. Contact an Authorized Toro Dealer for service.

   B. If the variance is within constraints, move to the next blade.

6. Repeat this procedure on each blade.

Removing the Blades

The blades must be replaced if a solid object is hit, if the blade is out of balance, or if the blade is bent. For best performance and continued safety conformance of the machine, use genuine Toro replacement blades. Replacement blades made by other manufacturers may result in non-conformance with safety standards.

1. Hold the blade end using a rag or thickly padded glove.
2. Remove the blade bolt, curved washer, and blade from the spindle shaft (Figure 61).

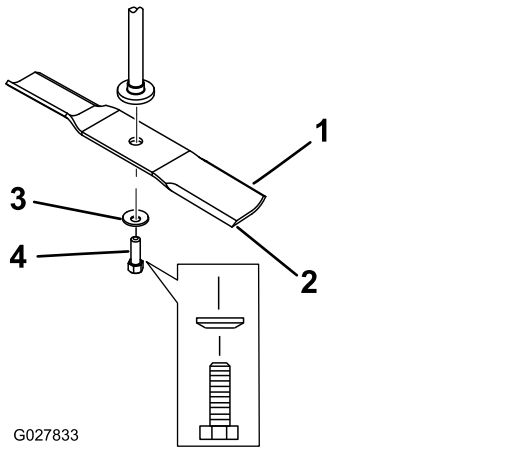

Figure 61

1. Sail area of the blade
2. Blade
3. Curved washer
4. Blade bolt

Sharpening the Blades

1. Use a file to sharpen the cutting edge at both ends of the blade (Figure 62).

   Note: Maintain the original angle.

   Note: The blade retains its balance if the same amount of material is removed from both cutting edges.

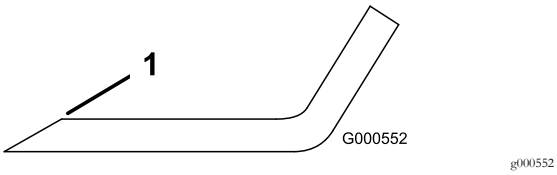

Figure 62

1. Sharpen at original angle.

2. Check the balance of the blade by putting it on a blade balancer (Figure 63).

   Note: If the blade stays in a horizontal position, the blade is balanced and can be used.

   Note: If the blade is not balanced, file some metal off the end of the sail area only (Figure 62).

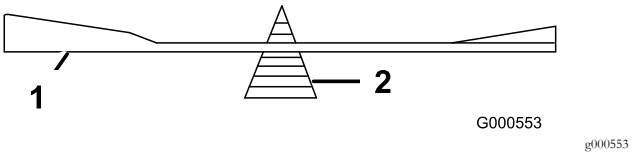

Figure 63

1. Blade
2. Balancer

3. Repeat this procedure until the blade is balanced.

Installing the Blades

1. Install the blade onto the spindle shaft (Figure 61).

   Important: The curved part of the blade must be pointing upward toward the inside of the mower to ensure proper cutting.

2. Install the curved washer (cupped side toward the blade) and the blade bolt (Figure 61).
3. Torque the blade bolt to 47 to 88 N·m (35 to 65 ft-lb).

Leveling the Mower Deck

Check to ensure that the mower deck is level any time you install the mower or when you see an uneven cut on your lawn.

Check the mower deck for bent blades prior to leveling, and remove and replace any bent blades; refer to the Checking for Bent Blades (page 42) before continuing.

Level the mower deck side-to-side first; then you can adjust the front-to-rear slope.

Requirements:

- The machine must be on a level surface.
- All tires must be properly inflated; refer to Checking the Tire Pressure (page 40).

Leveling from Side to Side

1. Park the machine on a level surface and disengage the blade-control switch.
2. Move the motion-control levers outward to the PARK position, shut off the engine, remove the key, and wait for all moving parts to stop before leaving the operating position.
3. Set the height-of-cut lever to middle position.
4. Carefully rotate the blades so that they are all side to side (Figure 64 and Figure 65).

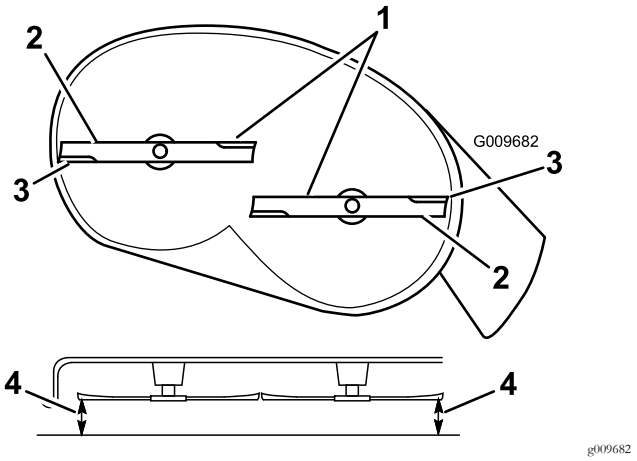

Figure 64

Mower Decks with 2 Blades

1. Blades side to side
2. Sail area of blade
3. Outside cutting edges
4. Measure from the tip of the blade to the flat surface here

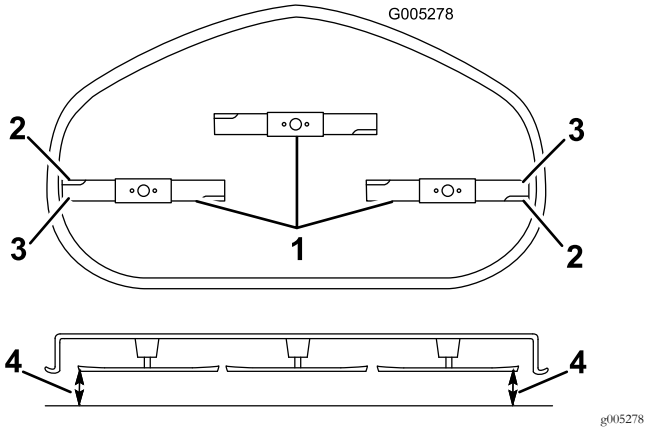

Figure 65

Mower Decks with 3 Blades

1. Blades side to side
2. Sail area of blade
3. Outside cutting edges
4. Measure from the tip of the blade to the flat surface here

5. Measure between the outside cutting edges and the flat surface (Figure 64 and Figure 65).

   Note: If both measurements are not within 5 mm (3/16 inch), an adjustment is required; continue with this procedure.

6. Move to the left side of the machine.
7. Loosen the side locking nut.
8. Raise or lower the left side of the mower deck by rotating the rear nut (Figure 66).

   Note: Rotate the rear nut clockwise to raise the mower deck; rotate the rear nut counter-clockwise to lower the mower deck. (Figure 66).

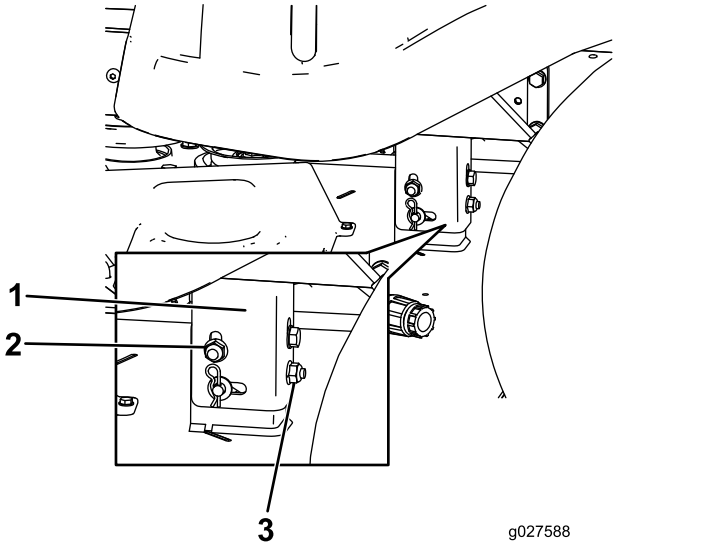

Figure 66

1. Hanger bracket
2. Side locking nut
3. Rear nut

9. Check the side-to-side adjustments again. Repeat this procedure until the measurements are correct.
10. Continue leveling the mower deck by checking the front-to-rear blade slope; refer to Adjusting the Front-to-Rear Blade Slope (page 44).

Adjusting the Front-to-Rear Blade Slope

Check the front-to-rear blade level any time you install the mower. If the front of the mower is more than 7.9 mm (5/16 inch) lower than the rear of the mower, adjust the blade level using the following instructions:

1. Park the machine on a level surface and disengage the blade-control switch.
2. Move the motion-control levers outward to the PARK position, shut off the engine, remove the key, and wait for all moving parts to stop before leaving the operating position.
3. Set the height-of-cut lever to middle position.

   Note: Check and adjust the side-to-side blade level if you have not checked the setting; refer to Leveling from Side to Side (page 43).

4. Carefully rotate the blades so they are facing front to rear (Figure 67 and Figure 68).

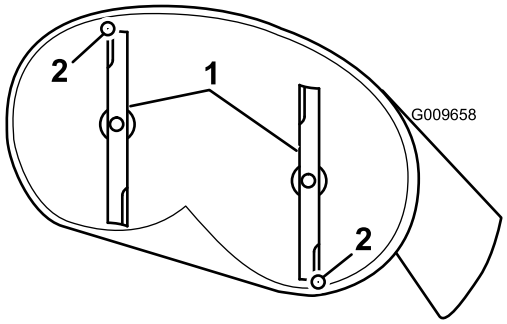

g009658

Figure 67

Mower Decks with 2 Blades

1. Blades front to rear
2. Measure from the tip of the blade to the flat surface here

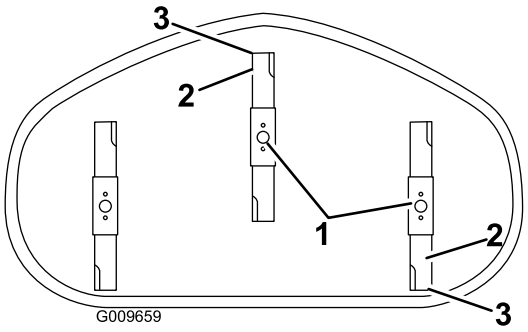

g009659

Figure 68

Mower Decks with 3 Blades

1. Blades front to rear
2. Outside cutting edges
3. Measure from the tip of the blade to the flat surface here.

5. Measure from the tip of the front blade to the flat surface, and the tip of the rear blade to the flat surface (Figure 67 and Figure 68).

   Note: If the front blade tip is not 1.6 to 7.9 mm (1/16 to 5/16 inch) lower than the rear blade tip, adjust the front locknut.

6. To adjust the front-to-rear blade slope, rotate the adjustment nut in the front of the mower (Figure 69).

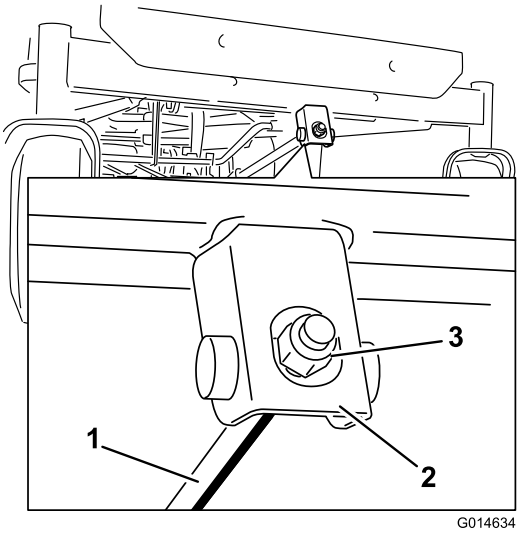

g014634

Figure 69

1. Adjusting rod
2. Adjusting block
3. Locknut

7. To raise the front of the mower, tighten the adjustment nut.
8. To lower the front of the mower, loosen the adjustment nut.
9. After adjustment, check the front-to-rear slope again, continue adjusting the nut until the front blade tip is 1.6 to 7.9 mm (1/16 to 5/16 inch) lower than the rear blade tip (Figure 67 and Figure 68).
10. When the front-to-rear blade slope is correct check the side-to-side level of the mower again, refer to Leveling from Side to Side (page 43).

Removing the Mower Deck

1. Park the machine on a level surface and disengage the blade-control switch.
2. Move the motion-control levers outward to the PARK position, shut off the engine, remove the key, and wait for all moving parts to stop before leaving the operating position.
3. Lower the height-of-cut lever to the lowest position.
4. Loosen the bottom 2 bolts holding the mower-deck curtain to the mower deck. Refer to Releasing the Mower-Deck Curtain (page 31).
5. Remove the hairpin-cotter pin from the front support rod, and remove the rod from the deck bracket (Figure 70).

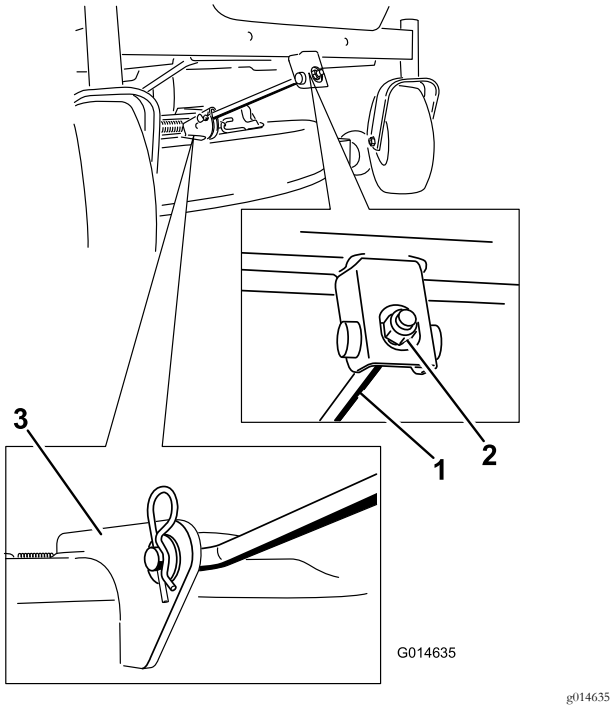

Figure 70

1. Front support rod
2. Locking nut
3. Deck bracket

6. Carefully lower the front of the mower deck to the ground.
7. Lift the mower deck and hanger brackets clear of the rear lift rod and lower the mower carefully to the ground (Figure 71).

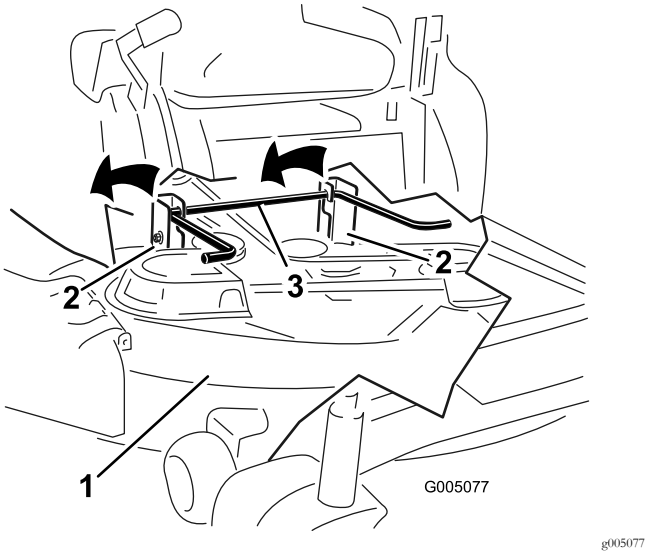

Figure 71

1. Mower deck
2. Hanger bracket
3. Rear lift rod

8. Slide the mower deck rearward to remove the mower belt from the engine pulley.
9. Slide the mower deck out from underneath the machine.

   Note: Retain all parts for future installation.

Installing the Mower Deck

1. Park the machine on a level surface and disengage the blade-control switch.
2. Move the motion-control levers outward to the PARK position, shut off the engine, remove the key, and wait for all moving parts to stop before leaving the operating position.
3. Slide the mower under the machine.
4. Lower the height-of-cut lever to the lowest position.
5. Lift the rear of the mower deck and guide the hanger brackets over the rear lift rod (Figure 71).
6. Attach the front support rod to the mower deck with the clevis pin and hairpin-cotter pin (Figure 70).
7. Install the mower belt onto the engine pulley; refer to Replacing the Mower-Deck Belt (page 48).
8. Tighten the bottom 2 bolts for the mower-deck curtain to the mower deck. Refer to Releasing the Mower-Deck Curtain (page 31).

Replacing the Grass Deflector

Service Interval: Before each use or daily—Inspect the grass deflector for damage.

⚠ WARNING

An uncovered discharge opening could allow the lawn mower to throw objects at you or bystanders, resulting in serious injury. Also, contact with the blade could occur. Never operate the machine without the grass deflector, the discharge cover, or the grass-collection system in place.

Never operate the machine without the grass deflector, the discharge cover, or the grass-collection system in place.

Inspect the grass deflector for damage before each use. Replace any damaged parts before use.

1. Remove the nut (3/8 inch) from the rod under the mower (Figure 72).

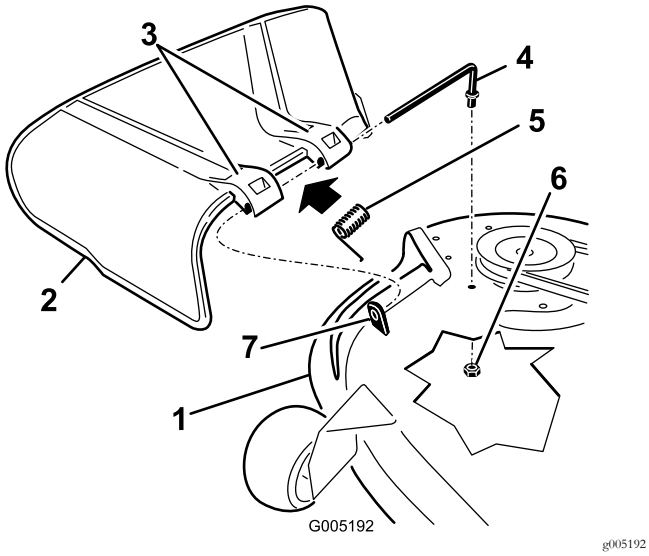

g005192

Figure 72

1. Mower deck
2. Grass deflector
3. Grass-deflector bracket
4. Rod
5. Spring
6. Nut (3/8 inch)
7. Short standoff

2. Slide the rod out of the short standoff, spring, and the grass deflector (Figure 72).
3. Remove the damaged or worn grass deflector.
4. Replace the grass deflector (Figure 72).
5. Slide the rod (straight end), through the rear-grass-deflector bracket.
6. Place the spring on the rod, with the end wires down and between the grass-deflector brackets.
7. Slide rod through the second grass-deflector bracket (Figure 72).
8. Insert the rod at the front of the grass deflector into the short standoff on the deck.
9. Secure the rear end of the rod into the mower with a nut (3/8 inch) as shown in Figure 72.

Important: The grass deflector must be spring loaded and in the down position. Lift the deflector up to test that it snaps to the fully down position.

Mower Belt Maintenance

Inspecting the Belts

Service Interval: Every 25 hours—Check the belts for wear or cracks.

Check the belts for cracks, frayed edges, burn marks, or any other damage. Replace damaged belts.

Replacing the Mower-Deck Belt

Squealing when the belt is rotating, blades slipping when cutting grass, frayed belt edges, burn marks, and cracks are signs of a worn mower belt. Replace the mower belt if any of these conditions are evident.

1. Park the machine on a level surface and disengage the blade-control switch.
2. Move the motion-control levers outward to the PARK position, shut off the engine, remove the key, and wait for all moving parts to stop before leaving the operating position.
3. Set the height-of-cut at the lowest cutting position of 38 mm (1-1/2 inches).
4. Remove the pulley covers (Figure 73).

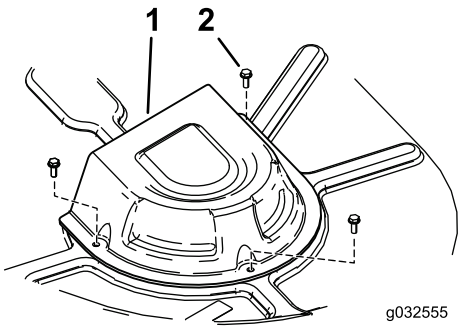

g032555

Figure 73

1. Cover
2. Screw

5. Loosen the bottom 2 bolts holding the mower-deck curtain to the mower deck. Refer to Releasing the Mower-Deck Curtain (page 31).
6. Using a spring-removal tool, (Toro Part No. 92-5771), remove the idler spring from the deck hook to remove tension on the idler pulley, and roll the belt off of the pulleys (Figure 74 and Figure 75).

⚠ WARNING

The spring is under tension when installed and can cause personal injury.

Be careful when removing the belt.

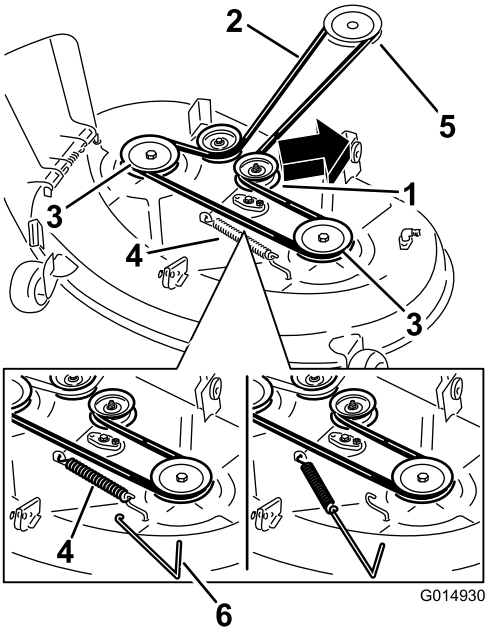

g014930

Figure 74

Mower Decks with 2 Blades

1. Idler pulley
2. Mower belt
3. Outside pulley
4. Spring
5. Engine pulley
6. Spring-removal tool

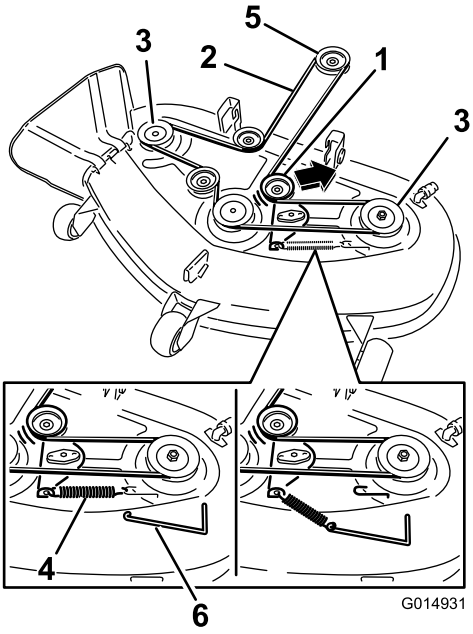

g014931

Figure 75

Mower Decks with 3 Blades

1. Idler pulley
2. Mower belt
3. Outside pulley
4. Spring
5. Engine pulley
6. Spring-removal tool

7. Route the new belt around the engine pulley and mower pulleys (Figure 75).

8. Using a spring-removal tool, install the idler spring over the deck hook, and place tension on the idler pulley and mower belt (Figure 74 and Figure 75).
9. Tighten the bottom 2 bolts for the mower-deck curtain to the mower deck. Refer to Releasing the Mower-Deck Curtain (page 31).
10. Install the pulley covers.

Cleaning

Washing the Underside of the Mower

Service Interval: After each use—Clean the mower-deck housing.

Important: You can wash the machine with a mild detergent and water. Do not pressure wash the machine. Avoid excessive use of water, especially near the control panel, under the seat, around the engine, hydraulic pumps, and motors.

Wash the underside of the mower after each use to prevent grass buildup for improved mulch action and clipping dispersal.

1. Park the machine on a level surface and disengage the blade-control switch.
2. Move the motion-control levers outward to the PARK position, shut off the engine, remove the key, and wait for all moving parts to stop before leaving the operating position.
3. Attach the hose coupling to the end of the mower washout fitting, and turn the water on high (Figure 76).

   Note: Spread petroleum jelly on the washout fitting O-ring to make the coupling slide on easier and protect the O-ring.

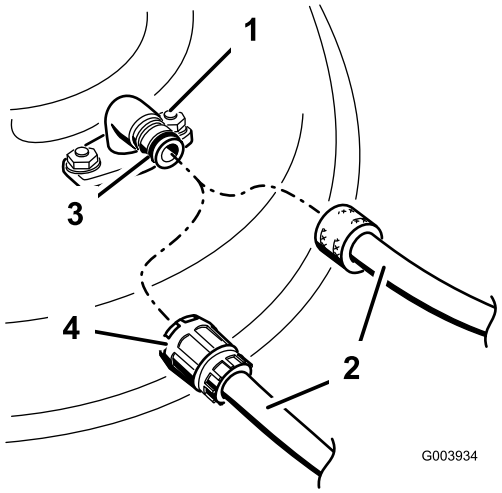

g003934

Figure 76

1. Washout fitting
2. Hose
3. O-ring
4. Coupling

4. Lower the mower to the lowest height-of-cut.
5. Sit on the seat and start the engine.
6. Engage the blade-control switch and let the mower run for 1 to 3 minutes.

7. Disengage the blade-control switch, shut off the engine, remove the ignition key, and wait for all moving parts to stop.
8. Turn the water off and remove the coupling from the washout fitting.

   Note: If the mower is not clean after 1 washing, soak it and let it stand for 30 minutes. Then, repeat the process.
9. Run the mower again for 1 to 3 minutes to remove excess water.

⚠ WARNING

A broken or missing washout fitting could expose you and others to thrown objects or blade contact. Contact with a blade or thrown debris can cause injury or death.

- **Replace broken or missing washout fitting immediately, before using mower again.**
- **Never put your hands or feet under the mower or through openings in the mower.**

Storage

Cleaning and Storage

1. Disengage the blade-control switch, move the motion-control levers outward to the PARK position, shut off the engine, and remove the key.
2. Remove grass clippings, dirt, and grime from the external parts of the entire machine, especially the engine. Clean dirt and chaff from the outside of the engine cylinder head fins and blower housing.

   Important: You can wash the machine with mild detergent and water. Do not pressure wash the machine. Avoid excessive use of water, especially near the control panel, under the seat, around the engine, hydraulic pumps, and motors.
3. Service the air cleaner; refer to Servicing the Air Cleaner (page 32).
4. Grease and oil the machine; refer to Lubrication (page 32).
5. Change the engine oil and filter; refer to Changing the Engine Oil and Oil Filter (page 34).
6. Check the tire pressure; refer to Checking the Tire Pressure (page 40).
7. Charge the battery; refer to Charging the Battery (page 39).
8. Check the condition of the blades; refer to Servicing the Cutting Blades (page 41).
9. Prepare the machine for storage when non-use occurs over 30 days. Prepare the machine for storage as follows.
   A. Add a petroleum based stabilizer/conditioner to the fuel in the tank. Follow the mixing instructions from the stabilizer manufacturer. Do not use an alcohol based stabilizer (ethanol or methanol).

      Note: A fuel stabilizer/conditioner is most effective when mixed with fresh fuel and used at all times.

   B. Run the engine to distribute the conditioned fuel through the fuel system (5 minutes).

   C. Shut off the engine, wait for it to cool, and drain the fuel tank.

   D. Restart the engine and run it until it stops.

   E. Start and run the engine until it does not start.

   F. Dispose of fuel properly. Recycle pursuant to local codes.

      Important: Do not store fuel with stabilizer/conditioner over 90 days.
10. Remove the spark plug(s) and check its condition; refer to Servicing the Spark Plug (page 36). With the spark plug(s) removed from the engine, pour 30 ml (2 tablespoons) of engine oil into the spark plug hole.

Use the starter to crank the engine and distribute the oil inside the cylinder. Install the spark plug(s). Do not install the wire on the spark plug(s).

11. Clean any dirt and chaff from the top of the mower.
12. Scrape any heavy buildup of grass and dirt from the underside of the mower, then wash the mower with a garden hose.
13. Check the condition of the drive and mower belts.
14. Check and tighten all bolts, nuts, and screws. Repair or replace any part that is worn or damaged.
15. Paint all scratched or bare metal surfaces. Paint is available from your Authorized Service Dealer.
16. Store the machine in a clean, dry garage or storage area. Remove the key from the ignition switch and keep it in a memorable place. Cover the machine to protect it and keep it clean.

Troubleshooting

Problem	Possible Cause	Corrective Action
The engine overheats.	1. The engine load is excessive. 2. The oil level in the crankcase is low. 3. The cooling fins and air passages under the engine-blower housing are plugged. 4. The air cleaner is dirty. 5. Dirt, water, or stale fuel is in the fuel system.	1. Reduce the ground speed. 2. Add oil to the crankcase. 3. Remove the obstruction from the cooling fins and air passages. 4. Clean or replace the air-cleaner element. 5. Contact an Authorized Service Dealer
The starter does not crank.	1. The blade-control switch is engaged. 2. The motion-control levers are not in the PARK position. 3. The battery is dead. 4. The electrical connections are corroded or loose. 5. A fuse is blown. 6. A relay or switch is damaged.	1. Move the blade-control switch to Disengaged. 2. Move the motion-control levers outward to the PARK position. 3. Charge the battery. 4. Check the electrical connections for good contact. 5. Replace the fuse. 6. Contact an Authorized Service Dealer.
The engine does not start, starts hard, or fails to keep running.	1. The fuel tank is empty. 2. The choke is not on. 3. The air cleaner is dirty. 4. The spark-plug wire(s) is loose or disconnected. 5. The spark plug(s) is pitted, fouled, or the gap is incorrect. 6. There is dirt in fuel filter. 7. Dirt, water, or stale fuel is in fuel system. 8. There is incorrect fuel in the fuel tank. 9. The oil level in the crankcase is low.	1. Fill the fuel tank. 2. Move the choke lever to On. 3. Clean or replace the air-cleaner element. 4. Install the wire(s) on the spark plug. 5. Install a new, correctly gapped spark plug(s). 6. Replace the fuel filter. 7. Contact an Authorized Service Dealer. 8. Drain the tank and replace the fuel with the proper type. 9. Add oil to the crankcase.
The machine does not drive.	1. The bypass valves are open. 2. The traction belts are worn, loose, or broken. 3. The traction belts are off of the pulleys. 4. The transmission has failed.	1. Close the tow valves. 2. Contact an Authorized Service Dealer. 3. Contact an Authorized Service Dealer. 4. Contact an Authorized Service Dealer.
There is an abnormal vibration.	1. The engine-mounting bolts are loose. 2. The engine pulley, idler pulley, or blade pulley is loose. 3. The engine pulley is damaged. 4. The cutting blade(s) is/are bent or unbalanced. 5. A blade-mounting bolt is loose. 6. A blade spindle is bent.	1. Tighten the engine-mounting bolts. 2. Tighten the appropriate pulley. 3. Contact an Authorized Service Dealer. 4. Install a new cutting blade(s). 5. Tighten the blade-mounting bolt. 6. Contact an Authorized Service Dealer.

Problem	Possible Cause	Corrective Action
The cutting height is uneven.	1. The blade(s) is not sharp. 2. A cutting blade(s) is/are bent. 3. The mower is not level. 4. An anti-scalp wheel is not set correctly. 5. The underside of the mower is dirty. 6. The tire pressure is incorrect. 7. A blade spindle is bent.	1. Sharpen the blade(s). 2. Install a new cutting blade(s). 3. Level the mower from side-to-side and front-to-rear. 4. Adjust the anti-scalp wheel height. 5. Clean the underside of the mower. 6. Adjust the tire pressure. 7. Contact an Authorized Service Dealer.
The blades do not rotate.	1. The drive belt is worn, loose or broken. 2. The drive belt is off of the pulley. 3. The Power Take-Off (PTO) switch or PTO clutch is faulty. 4. The mower belt is worn, loose, or broken.	1. Install a new drive belt. 2. Install the drive belt and check the adjusting shafts and belt guides for the correct position. 3. Contact an Authorized Service Dealer. 4. Install a new mower belt.

Schematics

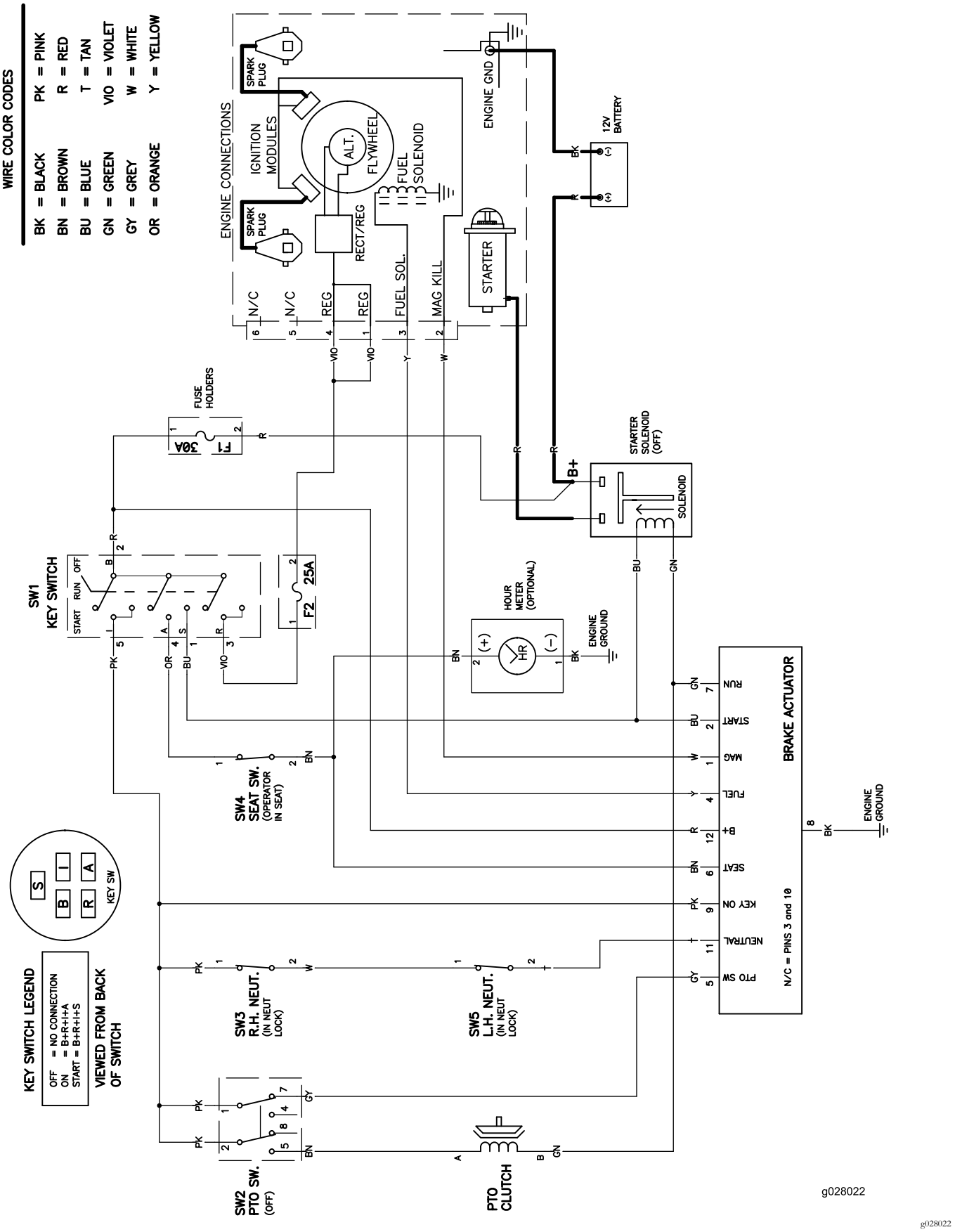

Electrical Diagram (Rev. A)

European Privacy Notice

The Information Toro Collects
Toro Warranty Company (Toro) respects your privacy. In order to process your warranty claim and contact you in the event of a product recall, we ask you to share certain personal information with us, either directly or through your local Toro company or dealer.

The Toro warranty system is hosted on servers located within the United States where privacy law may not provide the same protection as applies in your country.

BY SHARING YOUR PERSONAL INFORMATION WITH US, YOU ARE CONSENTING TO THE PROCESSING OF YOUR PERSONAL INFORMATION AS DESCRIBED IN THIS PRIVACY NOTICE.

The Way Toro Uses Information
Toro may use your personal information to process warranty claims, to contact you in the event of a product recall and for any other purpose which we tell you about. Toro may share your information with Toro's affiliates, dealers or other business partners in connection with any of these activities. We will not sell your personal information to any other company. We reserve the right to disclose personal information in order to comply with applicable laws and with requests by the appropriate authorities, to operate our systems properly or for our own protection or that of other users.

Retention of your Personal Information
We will keep your personal information as long as we need it for the purposes for which it was originally collected or for other legitimate purposes (such as regulatory compliance), or as required by applicable law.

Toro's Commitment to Security of Your Personal Information
We take reasonable precautions in order to protect the security of your personal information. We also take steps to maintain the accuracy and current status of personal information.

Access and Correction of your Personal Information
If you would like to review or correct your personal information, please contact us by email at legal@toro.com.

Australian Consumer Law

Australian customers will find details relating to the Australian Consumer Law either inside the box or at your local Toro Dealer.

The Toro Warranty and The Toro GTS Starting Guarantee

Conditions and Products Covered

The Toro Company and its affiliate, Toro Warranty Company, pursuant to an agreement between them, jointly promise to repair the Toro Product listed below if defective in materials or workmanship or if the Toro GTS (Guaranteed to Start) engine will not start on the first or second pull, provided the routine maintenance required in the *Operator's Manual* have been performed.

The following time periods apply from the original date of purchase:

Products	Warranty Period
Walk Power Mowers	
• Cast Deck	5 years Residential Use[2] 90 Days Commercial Use
—Engine	5 years GTS Guarantee, Residential Use[3]
—Battery	2 years
• Steel Deck	2 years Residential Use[2] 30 Days Commercial Use
—Engine	2 years GTS Guarantee, Residential Use[3]
TimeMaster Mowers	3 years Residential Use[2] 90 Days Commercial Use
• Engine	3 years GTS Guarantee, Residential Use[3]
• Battery	2 years
Electric Hand Held Products and Walk Power Mowers	2 years Residential Use[2] No Warranty for Commercial Use
All Ride-On Units Below	
• Engine	See engine manufacturer's warranty[4]
• Battery	2 years Residential Use[2]
• Attachments	2 years Residential Use[2]
DH Lawn & Garden Tractors	2 years Residential Use[2] 30 Days Commercial Use
XLS Lawn & Garden Tractors	3 years Residential Use[2] 30 Days Commercial Use
TimeCutter	3 years Residential Use[2] 30 Days Commercial Use

[1]Original Purchaser means the person who originally purchased the Toro Product.

[2]Residential use means use of the product on the same lot as your home. Use at more than one location is considered commercial use and the commercial use warranty would apply.

[3]The Toro GTS Starting Guarantee does not apply when the product is used commercially.

[4]Some engines used on Toro Products are warranted by the engine manufacturer.

Warranty may be denied if the hour meter is disconnected, altered, or shows signs of being tampered with.

Owner Responsibilities

You must maintain your Toro Product by following the maintenance procedures described in the *Operator's Manual*. Such routine maintenance, whether performed by a dealer or by you, is at your expense.

Instructions for Obtaining Warranty Service

If you think that your Toro Product contains a defect in materials or workmanship, follow this procedure:

1. Contact your seller to arrange service of the product. If for any reason it is impossible for you to contact your seller, you may contact any Toro Authorized Distributor to arrange service. Visit http://www.toro.com/en-us/locator/pages/default.aspx to locate a Toro distributor in your area.
2. Bring the product and your proof of purchase (sales receipt) to the servicing outlet. If for any reason you are dissatisfied with the servicing outlet's analysis or with the assistance provided, contact us at:

   Toro Warranty Company
   Toro Customer Care Department, RLC Division
   8111 Lyndale Avenue South
   Bloomington, MN 55420-1196
   001–952–948–4707

Items and Conditions Not Covered

There is no other express warranty except for special emission system coverage and engine warranty coverage on some products. This express warranty does not cover the following:

- Cost of regular maintenance service or parts, such as filters, fuel, lubricants, oil changes, spark plugs, air filters, blade sharpening or worn blades, cable/linkage adjustments, or brake and clutch adjustments
- Components failing due to normal wear
- Any product or part which has been altered, misused, neglected, requires replacement, or repair due to accidents or lack of proper maintenance
- Pickup and delivery charges
- Repairs or attempted repairs by anyone other than an Authorized Toro Service Dealer
- Repairs necessary due to failure to follow recommended fuel procedure (consult *Operator's Manual* for more details)
  - Removing contaminants from the fuel system is not covered
  - Use of old fuel (more than one month old) or fuel which contains more than 10% ethanol or more that 15% MTBE
  - Failure to drain the fuel system prior to any period of non-use over one month
- Repairs or adjustments to correct starting difficulties due to the following:
  - Failure to follow proper maintenance procedures or recommended fuel procedure
  - Rotary mower blade striking an object
- Special operational conditions where starting may require more than two pulls:
  - First time starts after extended period of non-use over three months or seasonal storage
  - Cool temperature starts such as those found in early spring and late autumn
  - Improper starting procedures - if you are having difficulty starting your unit, please check the *Operator's Manual* to ensure that you are using the correct starting procedures. This can save an unnecessary visit to an Authorized Toro Service Dealer.

General Conditions

The purchaser is covered by the national laws of each country. The rights to which the purchaser is entitled with the support of these laws are not restricted by this warranty.