Form No. 3409-413 Rev A

TORO®

Count on it.

Parts Catalog

TimeCutter® SS 4200

Riding Mower

Model No. 74720—Serial No. 400000000 and Up

Register at www.Toro.com.
Original Instructions (EN)

3409-413 A

Ordering Replacement Parts

To order replacement parts, please supply the part number, the quantity, and the description of each part desired.

Understanding Reference Numbers

Each identified part in an illustration has a reference number. The reference number for a part also appears in the parts list, along with other information about the part.

This catalog uses two special reference number formats, one to indicate parts in a service assembly and another to indicate the quantity of a given part in an illustration.

Service Assembly Reference Numbers

Parts in service assemblies have reference numbers in the form a:b. The a represents the reference number of the entire service assembly and the b represents a sequential number unique to each part within the service assembly.

For example, a wheel assembly might be identified by reference number 6, the tire by 6:1, the valve by 6:2, and the wheel by 6:3. When you order the assembly identified by reference number 6, you receive all parts identified by reference numbers 6:1,6:2, and 6:3. However, you may also order any part individually. Reference numbers of this type appear in illustration and in parts lists.

Reference Numbers Indicating Quantity

In an illustration, if a reference number indicates more than one part, the reference number has the form nX y. The n represents the quantity of the part, the X is the multiplication symbol, and the y represents the reference number.

For example, in an illustration, the reference number 2X 37 means that two of the parts identified by reference number 37 are indicated.

Contents

Frame and Front Axle Assembly 4
Deck Lift Assembly 6
Caster, Wheel and Tire Assembly 8
Traction Drive Assembly 10
Left Hand Hydro Transaxle Assembly No. 119-3330 12
Right Hand Hydro Transaxle Assembly No. 119-3331 14
Brake Assembly 16
Tire Assembly No. 131-3671 18
Seat Assembly 20
Motion Control Assembly 22
Engine and Muffler Assembly 24
Fuel System Assembly 26
Air Intake and Filtration Assembly 28
Ignition and Electrical Assembly 30
Crankcase Assembly 32
Governor Control Assembly 34
Piston and Cylinder Head Assembly 36
Blower Housing Assembly 38
Gasket and Seal Kit Assemby 40
Body Styling and Fuel Tank Assembly 42
Battery and Electrical Assembly 44
42 Inch Deck, Belt and Blade Assembly 46
42 Inch Deck Decal Assembly No. 131-3604 48
Model Specific Decal Assembly 50
Speed Control Decal, HOC Decal and Service Decal Assembly 52
Clutch Assembly 54
Attachments and Accessories 56

© 2017—The Toro® Company
8111 Lyndale Avenue South
Bloomington, MN 55420

Contact us at www.Toro.com.
Printed in the USA.
All Rights Reserved

Frame and Front Axle Assembly

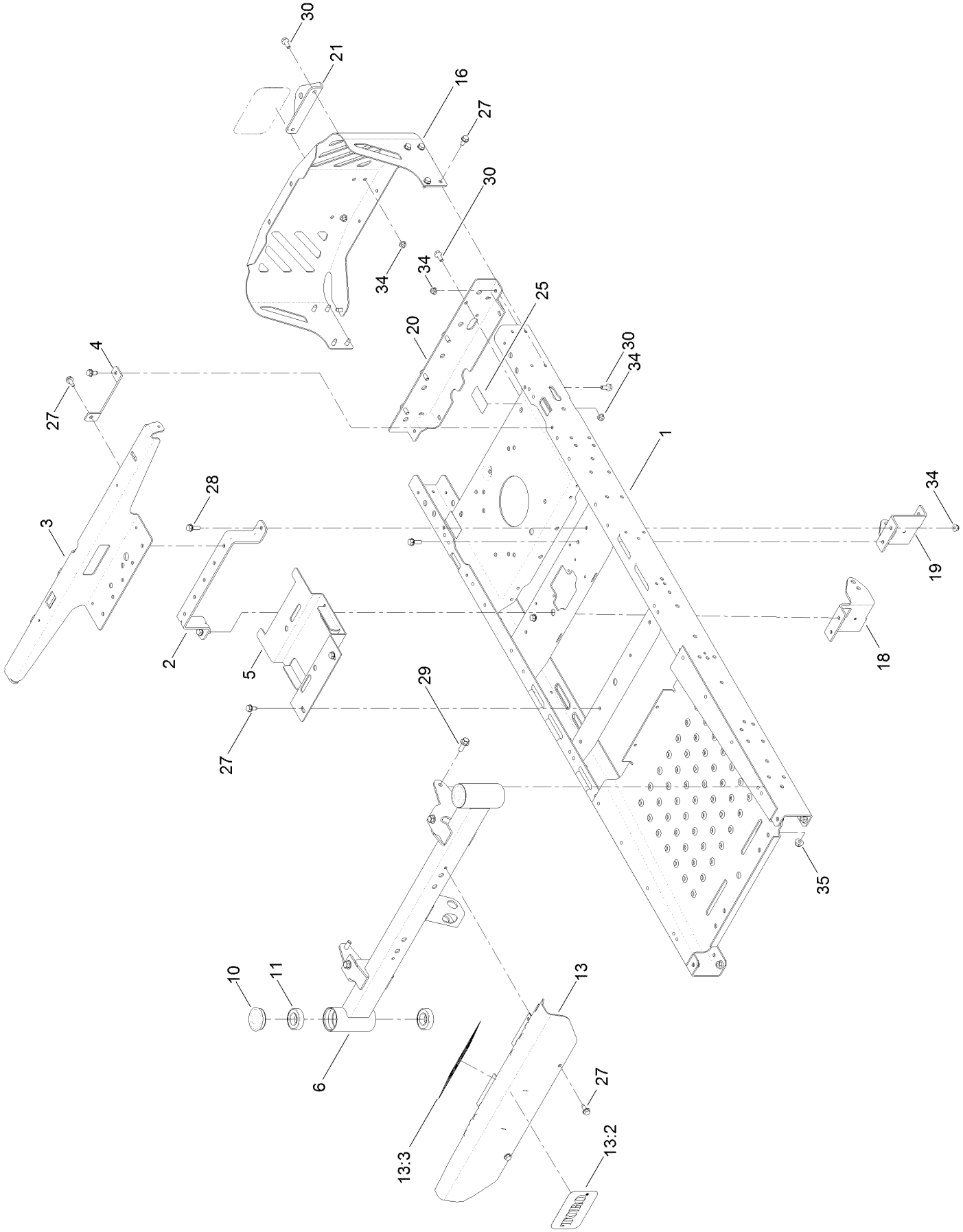

Frame and Front Axle Assembly (continued)

Ref.	Part Number	Qty.	Description
1	127-3444-01	1	Frame ASM
2	119-3435-03	1	Brace-Seat, Rear (Narrow)
3	131-1040-03	1	Support-Pod
4	119-3431-03	2	Support-Tank, Rear
5	131-0914-03	1	Bracket-Battery
6	125-1742-01	1	Axle-Front, Narrow
10	116-4348	2	Cap-Grease
11	109-3678	4	Bearing-Ball
13	132-0890	1	Footrest ASM
13:2	105-8278	1	Decal
13:3	132-0869	1	Decal-Danger
16	127-3353-03	1	Guard-Engine, Narrow
18	131-0901-01	1	Mount-Hydro, Front (Right)
19	131-0902-01	1	Mount-Hydro, Front (Left)
20	130-6950-01	1	Crossmember-Rear, Narrow
21	117-1232-03	1	Bracket-Hitch
25	121-2989	2	Decal-Bypass
27	32144-70	18	Screw-HWHTF
28	3234-29	4	Screw-HHF
29	3234-42	6	Screw-HHF
30	3234-47	8	Screw-HHF
34	104-8300	12	Nut-Flange, NI
35	104-8301	6	Nut-Flange, NI

Deck Lift Assembly

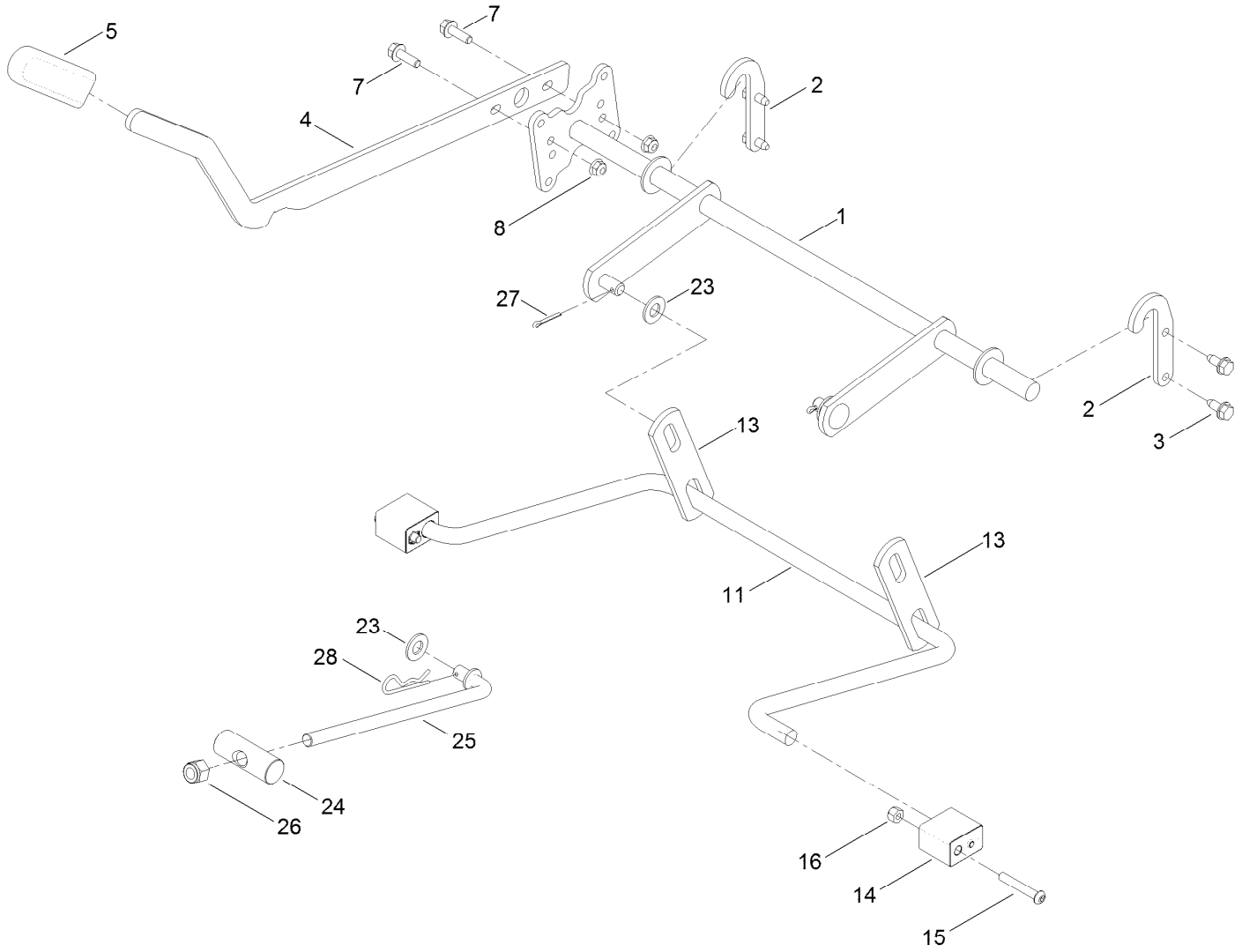

Deck Lift Assembly (continued)

Ref.	Part Number	Qty.	Description
1	132-6872-03	1	Lift-Deck, Narrow
2	119-8875	2	Bracket-Lift
3	32144-70	4	Screw-HWHTF
4	119-3427-03	1	Lever-Lift
5	1-633268	1	Grip-Lever
7	3234-29	2	Screw-HHF
8	104-8300	2	Nut-Flange, NI
11	108-7839	1	Arm-Lift, Rear
13	108-7840	2	Link-Lift
14	108-7845	2	Block-Pivot
15	120-5499	2	Screw-HSBH
16	3296-29	2	Nut-Lock, NI
23	3256-26	3	Washer-Flat
24	119-8810	1	Pin-Pivot
25	133-4319	1	Rod-Mount, Deck
26	3296-19	1	Nut-Hex
27	3272-11	2	Pin-Cotter
28	1-806005	1	Pin-Cotter

Caster, Wheel and Tire Assembly

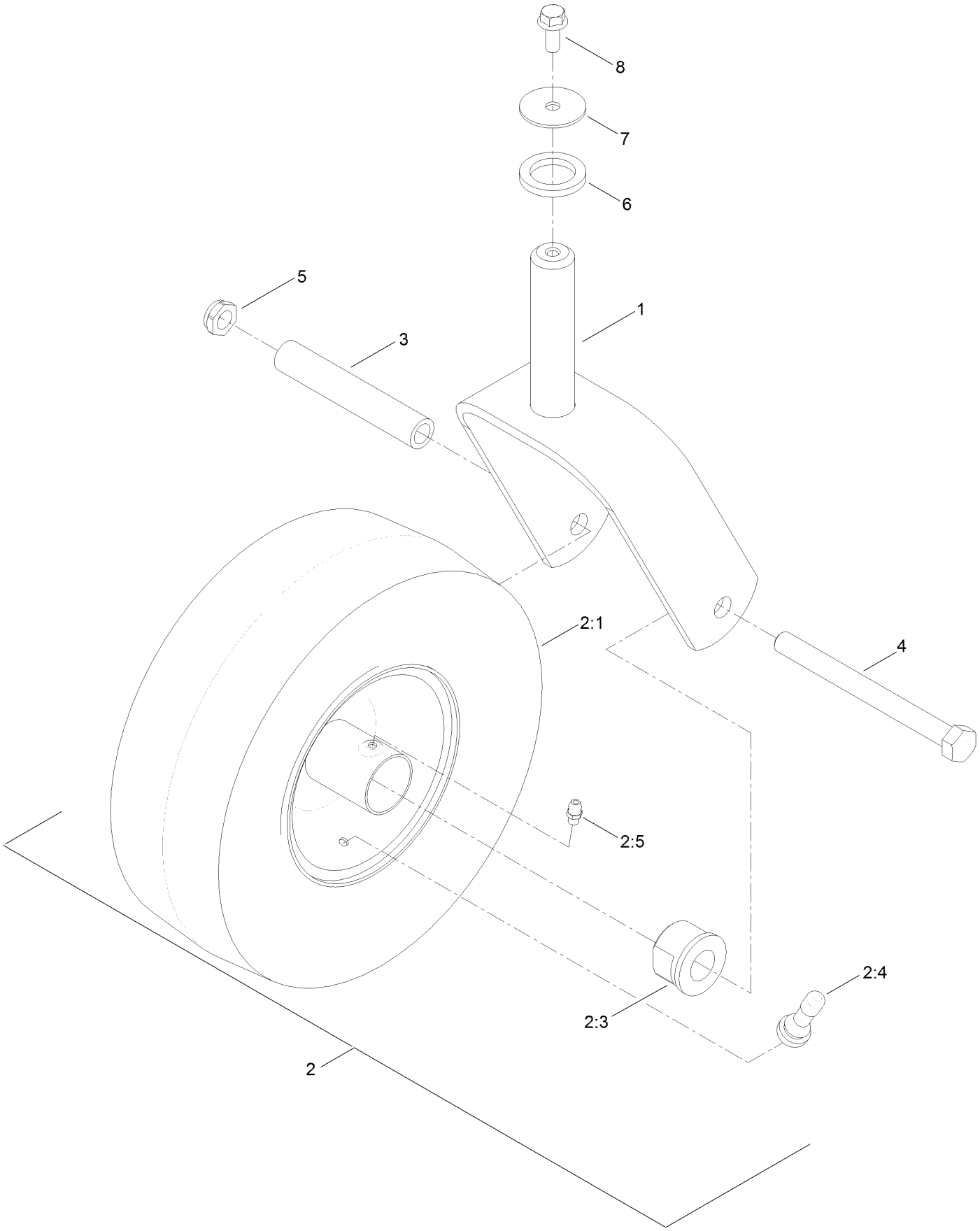

Caster, Wheel and Tire Assembly (continued)

Ref.	Part Number	Qty.	Description
1	120-7964-01	2	Caster Fork ASM
2	130-0736	2	Caster Wheel ASM
2:1	130-0735	1	Tire
2:3	114-1640	2	Bushing-Flange
2:4	232-27	1	Stem-Valve
2:5	302-5	1	Fitting-Grease
2:6	105-0844	1	Tube-Inner ●■

Ref.	Part Number	Qty.	Description
3	104-3667	2	Spanner-Wheel
4	325-22	2	Screw-HH
5	3296-45	2	Nut-Lock, NI
6	117-7394	2	Washer-Thrust
7	3256-68	2	Washer-Flat
8	3234-47	2	Screw-HHF

● Not illustrated

■ Optional Equipment

Traction Drive Assembly

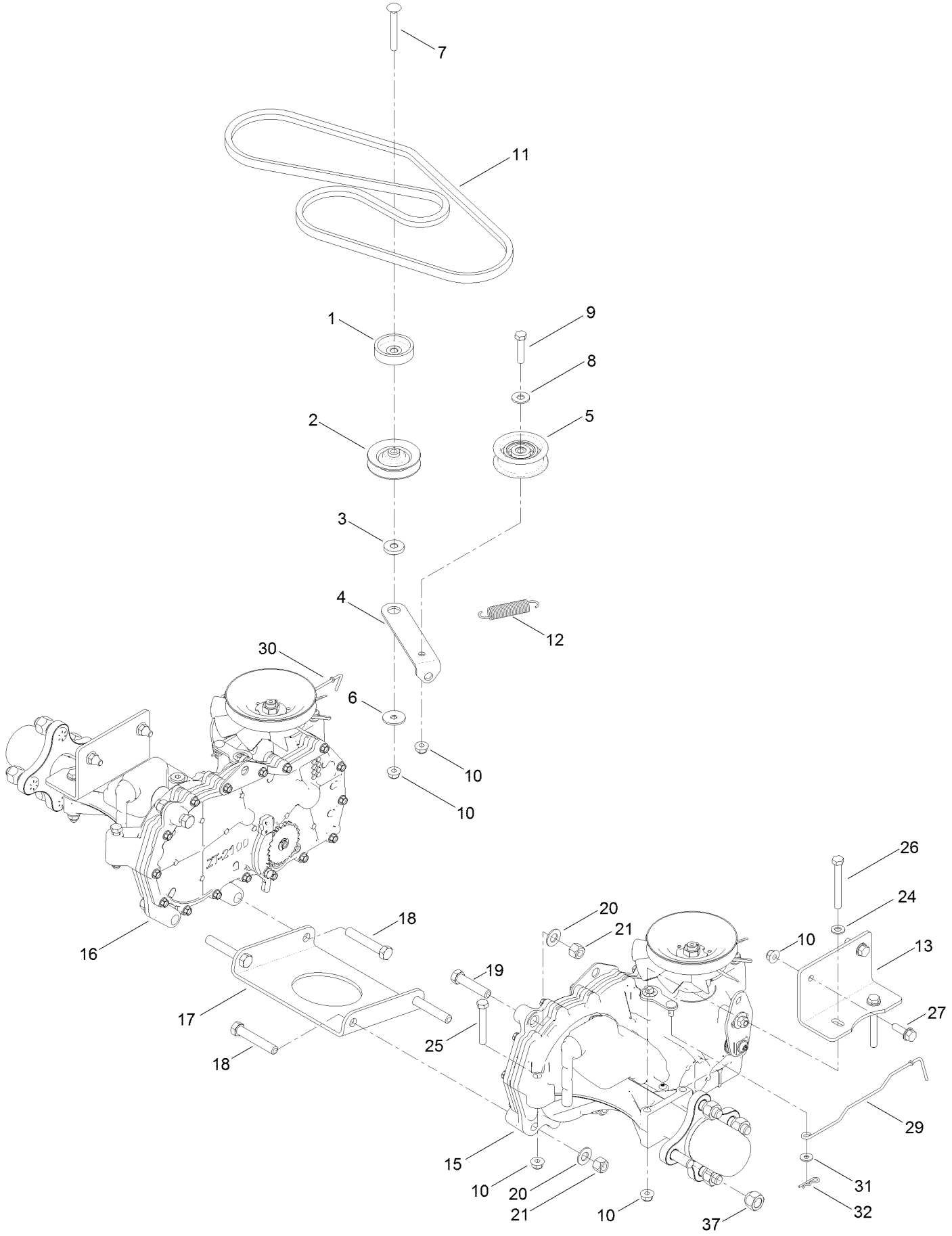

Traction Drive Assembly (continued)

Ref.	Part Number	Qty.	Description
1	119-3353	1	Spacer
2	119-8822	1	Pulley-Idler
3	119-3327	1	Spacer-Arm, Idler
4	119-3326	1	Arm-Idler
5	106-2176	1	Pulley-Idler
6	5-4460	1	Washer-Pivot
7	3230-8	1	Screw-CARR
8	3256-3	1	Washer-Flat
9	322-7	1	Screw-HH
10	104-8300	14	Nut-Flange, NI
11	130-6975	1	V-Belt
12	104-6415	1	Spring-Return, Pedal
13	117-7264-03	2	Mount-Hydro
15	119-3330	1	LH Hydro Transaxle ASM
16	119-3331	1	RH Hydro Transaxle ASM

Ref.	Part Number	Qty.	Description
17	119-3339-03	1	Plate-Cross, Hydro
18	324-10	4	Screw-HH
19	324-8	2	Screw-HH
20	3256-25	6	Washer-Flat
21	3296-48	6	Nut-Lock, NI
24	3256-23	6	Washer-Flat
25	322-11	4	Screw-HH
26	322-13	4	Screw-HH
27	3234-29	4	Screw-HHF
29	131-0900	1	Rod-Bypass, LH
30	130-7049	1	Rod-Bypass, RH
31	119-8952	2	Washer
32	3290-307	2	Pin-Cotter
37	242-50	8	Nut-Lug

Left Hand Hydro Transaxle Assembly No. 119-3330

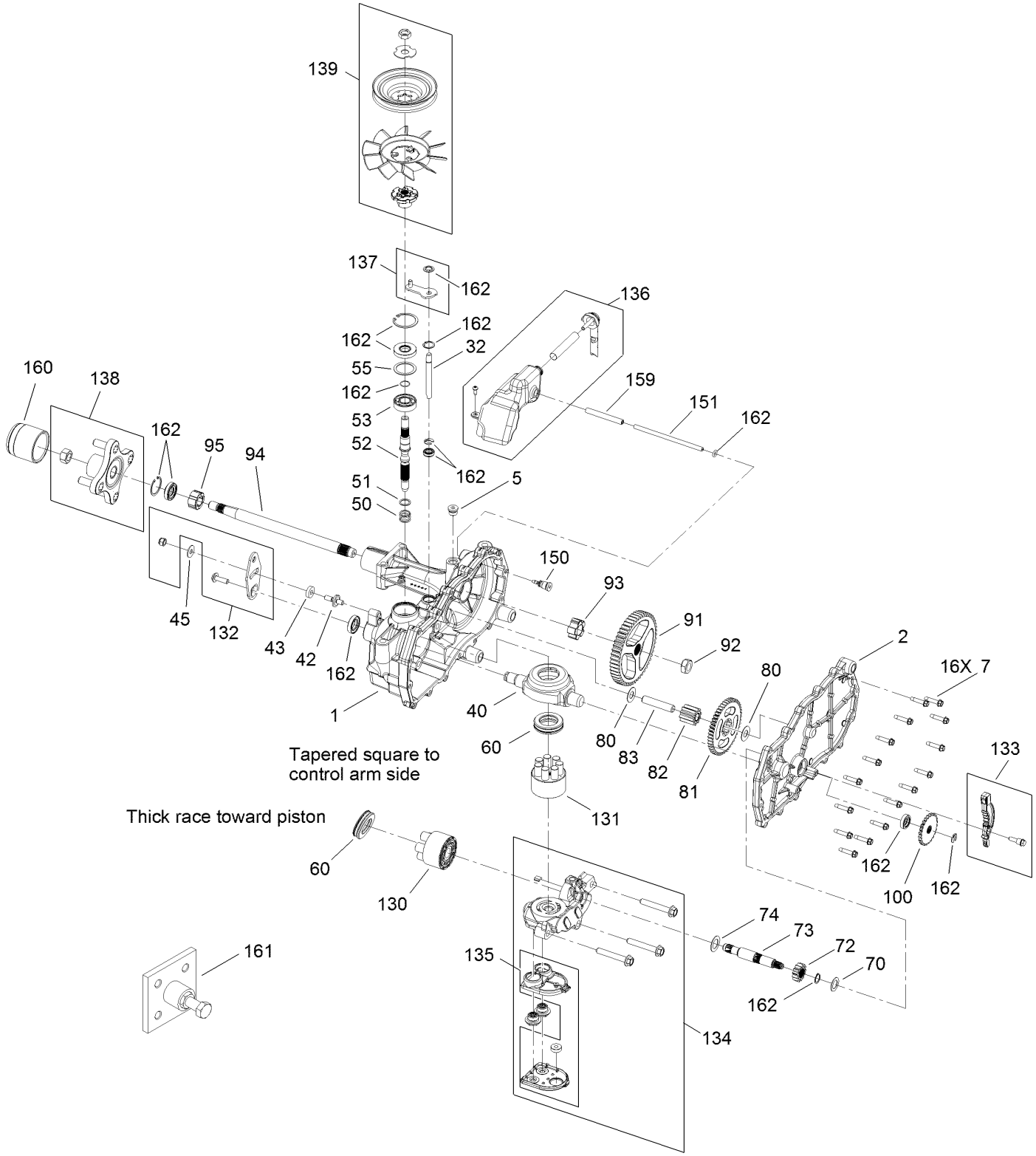

Left Hand Hydro Transaxle Assembly No. 119-3330 (continued)

Ref.	Part Number	Qty.	Description
1	120-5532	1	Main Housing ASM
2	120-5534	1	Housing Side Kit
5	104-2189	1	Plug-Thread, Straight
7	117-5359	16	Screw-HHF
13	104-2147	1	Sealant ●
32	106-8678	2	Rod-Bypass
40	104-5304	1	Swashplate-Trunnion
42	104-2116	1	Stud
43	112-9853	1	Puck-Friction
45	114-8491	1	Washer
50	120-5537	1	Spring-Compression
51	120-5538	1	Washer
52	104-5306	1	Shaft-Input
53	104-5311	1	Bearing-Ball
55	104-5308	1	Spacer
60	94-6922	1	Bearing-Thrust
70	104-5339	1	Washer-Flat
72	104-5316	1	Gear-Pinnion, 13T
73	106-8683	1	Shaft-Motor
74	104-5360	1	Washer
80	119-5541	2	Washer
81	104-5317	1	Gear-10T/48T
82	104-5318	1	Gear-Jackshaft, 10T
83	104-5329	1	Pin-Jackshaft
91	120-5539	1	Gear-Bull
92	104-2142	1	Nut-HJ
93	115-8314	1	Bushing-Inboard
94	120-5540	1	Shaft-Axle
95	120-5541	1	Bearing-Sleeve
100	106-8694	1	Disc-Brake, Cog
130	103-2666	1	Cylinder Block Kit
131	110-8561	1	Pump Block ASM
132	117-5362	1	Arm Control Kit
133	106-8688	1	Brake Arm Kit
134	112-9861	1	Center Section Filter Kit
135	114-1634	1	Filter Kit
136	121-5730	1	RH Expansion Tank Kit
137	120-5549	1	Bypass Kit
138	121-5731	1	Hub Kit
139	121-5729	1	Fan Pulley Kit
150	104-5349	1	Fitting-SAE
151	115-8302	1	Hose
159	121-5728	1	Case-Tube
160	125-0041	1	Cap-Axle
161	114-8467	1	Hub-Puller, 4 Bolt
162	120-7103	1	Seal And Ring Kit

● Not illustrated

Right Hand Hydro Transaxle Assembly No. 119-3331

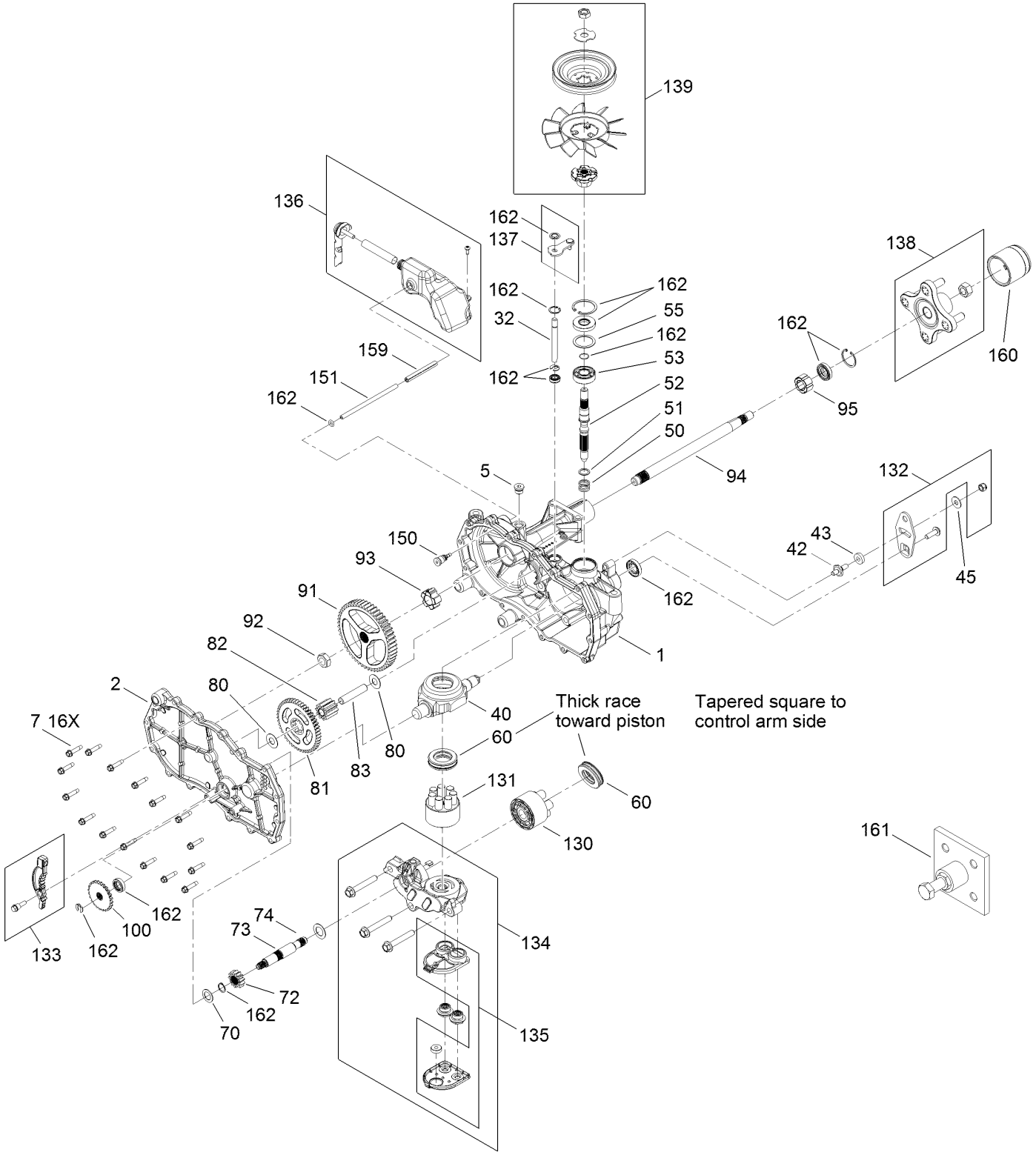

Right Hand Hydro Transaxle Assembly No. 119-3331 (continued)

Ref.	Part Number	Qty.	Description
1	120-5531	1	Main Housing ASM
2	120-5533	1	Housing Side Kit
5	104-2189	1	Plug-Thread, Straight
7	117-5359	16	Screw-HHF
13	104-2147	1	Sealant ●
32	106-8678	2	Rod-Bypass
40	104-5304	1	Swashplate-Trunnion
42	104-2116	1	Stud
43	112-9853	1	Puck-Friction
45	114-8491	1	Washer
50	120-5537	1	Spring-Compression
51	120-5538	1	Washer
52	104-5306	1	Shaft-Input
53	104-5311	1	Bearing-Ball
55	104-5308	1	Spacer
60	94-6922	1	Bearing-Thrust
70	104-5339	1	Washer-Flat
72	104-5316	1	Gear-Pinnion, 13T
73	106-8683	1	Shaft-Motor
74	104-5360	1	Washer
80	119-5541	2	Washer
81	104-5317	1	Gear-10T/48T
82	104-5318	1	Gear-Jackshaft, 10T
83	104-5329	1	Pin-Jackshaft
91	120-5539	1	Gear-Bull
92	104-2142	1	Nut-HJ
93	115-8314	1	Bushing-Inboard
94	120-5540	1	Shaft-Axle
95	120-5541	1	Bearing-Sleeve
100	106-8694	1	Disc-Brake, Cog
130	103-2666	1	Cylinder Block Kit
131	110-8561	1	Pump Block ASM
132	117-5362	1	Arm Control Kit
133	106-8688	1	Brake Arm Kit
134	112-9862	1	Center Section Filter Kit
135	114-1634	1	Filter Kit
136	121-5735	1	LH Expansion Tank Kit
137	107-2489	1	Bypass Arm Kit
138	121-5731	1	Hub Kit
139	121-5729	1	Fan Pulley Kit
150	104-5349	1	Fitting-SAE
151	115-8302	1	Hose
159	121-5728	1	Case-Tube
160	125-0041	1	Cap-Axle
161	114-8467	1	Hub-Puller, 4 Bolt
162	120-7103	1	Seal And Ring Kit

● Not illustrated

Brake Assembly

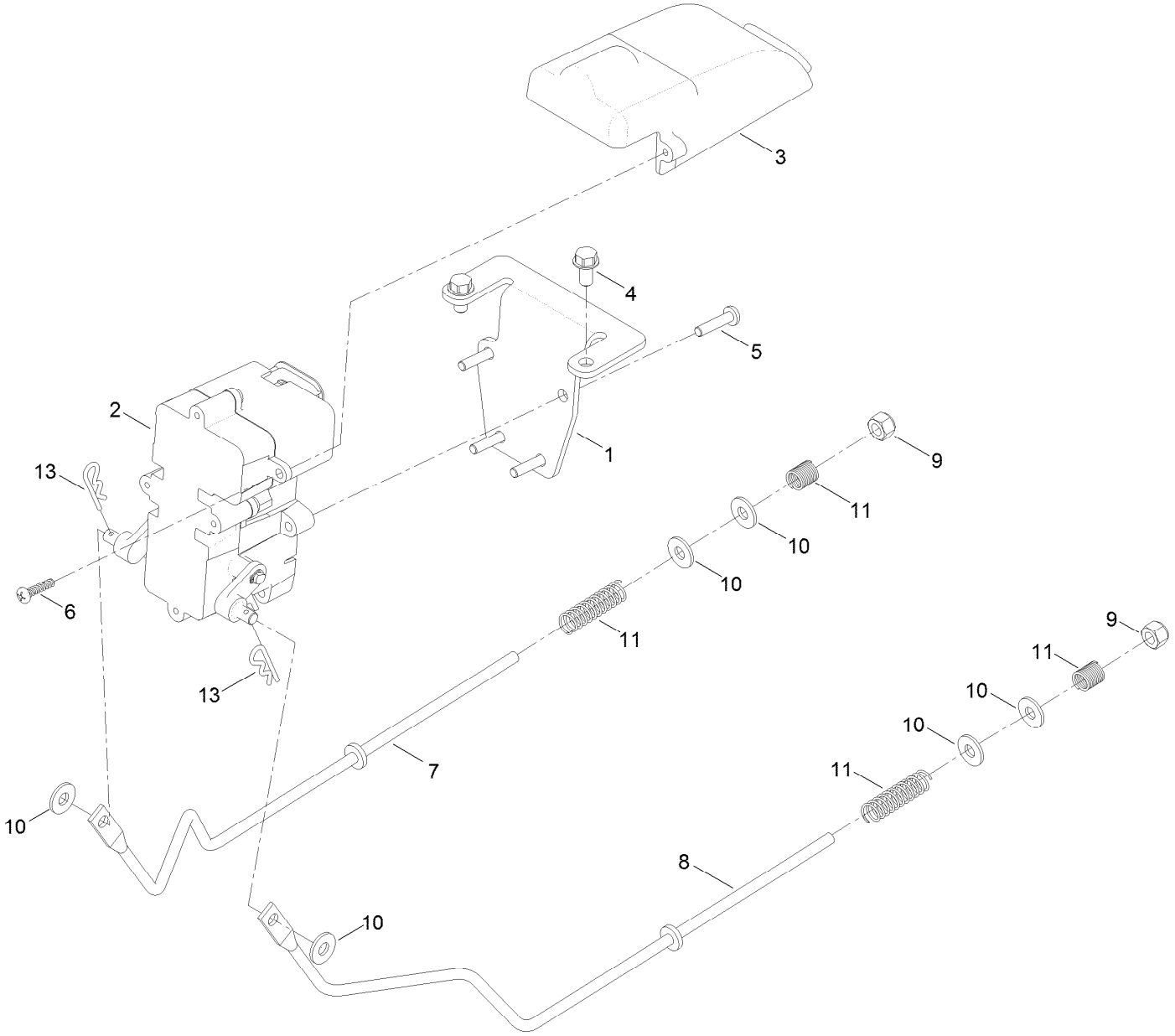

Brake Assembly (continued)

Ref.	Part Number	Qty.	Description
1	130-0790-03	1	Bracket-Mount, Brake
2	136-4213	1	Brake Box ASM
3	132-6949	1	Cover-Connector
4	32144-4	2	Screw-HWH
5	32144-36	4	Screw-PPH
6	94-4496	2	Screw-PPH
7	121-2974	1	Rod-Brake, RH
8	121-2975	1	Rod-Brake, LH
9	3296-42	2	Nut-Lock, NI
10	119-8952	6	Washer
11	117-1169	4	Spring-Compression
13	3290-307	2	Pin-Cotter

Tire Assembly No. 131-3671

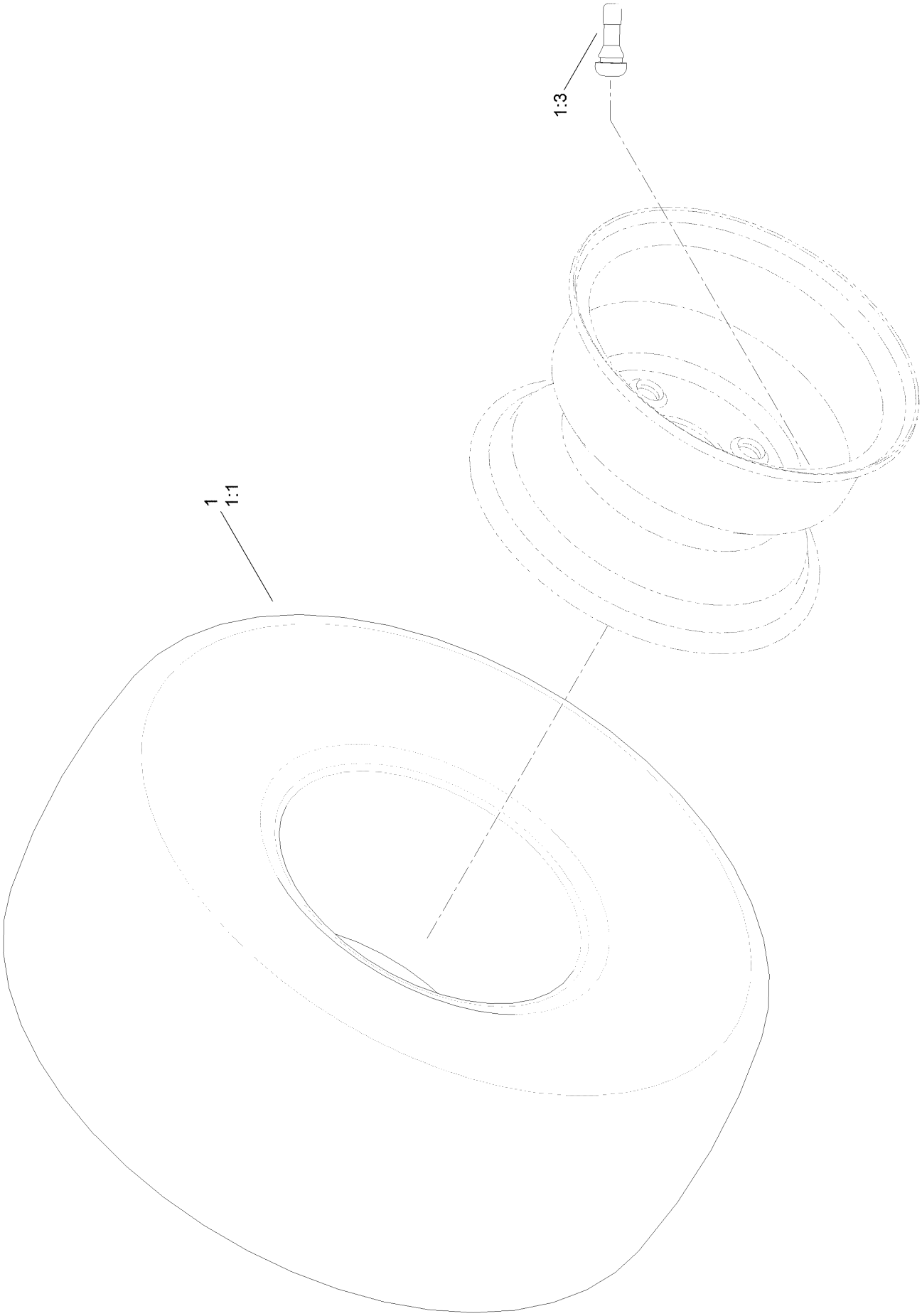

Tire Assembly No. 131-3671 (continued)

Ref.	Part Number	Qty.	Description
1	131-3671	2	2 Ply Wheel And Tire ASM
1:1	131-3678	1	Tire-2 Ply
1:3	232-27	1	Stem-Valve
1:99	107-2491	1	Tube-Tire ●

● Not illustrated

Seat Assembly

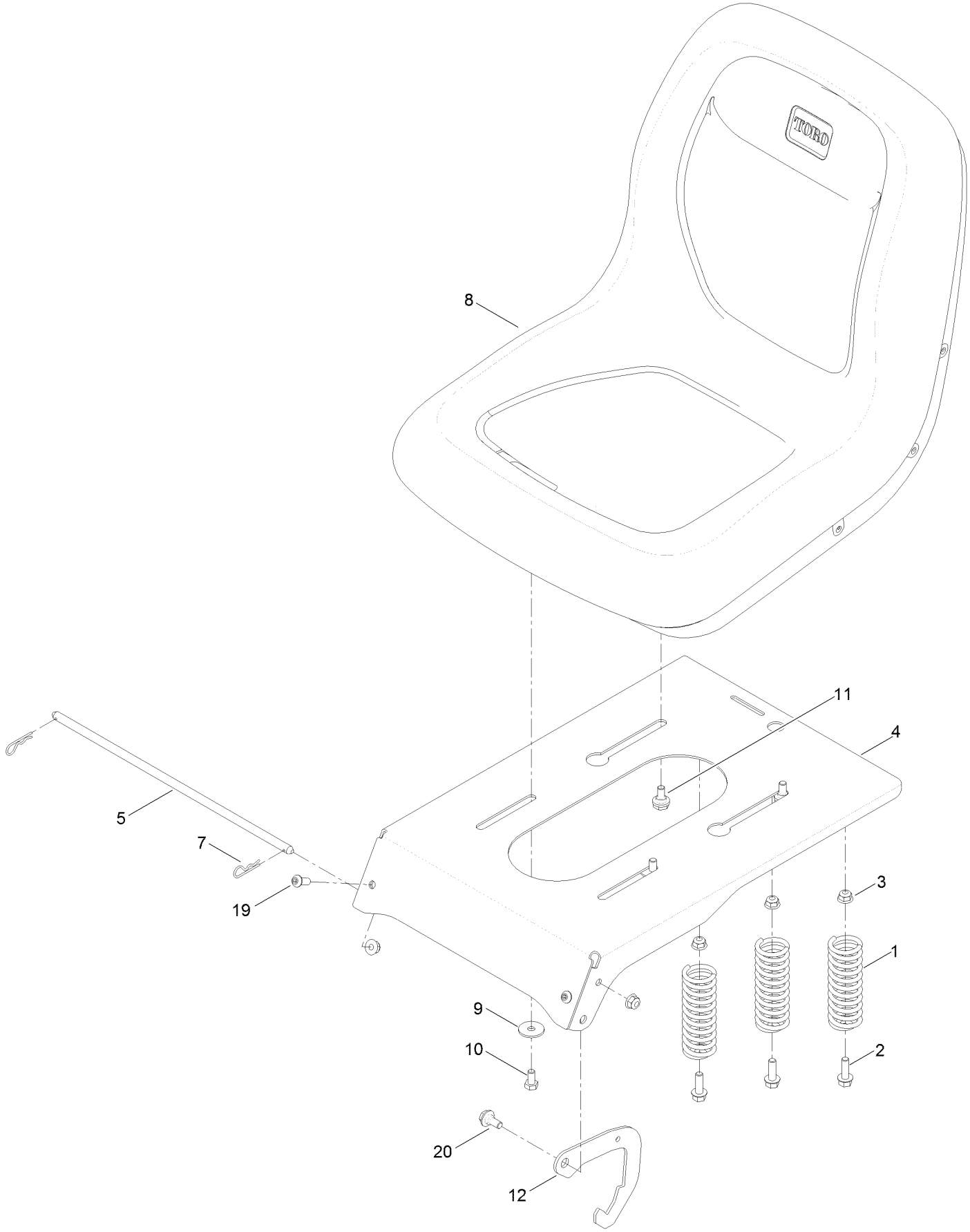

Seat Assembly (continued)

Ref.	Part Number	Qty.	Description
1	92-7054	3	Spring-Compression
2	3234-29	3	Screw-HHF
3	104-8300	5	Nut-Flange, NI
4	131-4037-01	1	PAN-Seat
5	119-3433	1	Rod-Pivot, Narrow
7	3290-250	2	Pin-Cotter
8	119-8829	1	Seat-18 Inch
9	5-4460	2	Washer-Pivot
10	322-2	2	Screw-HH
11	37-8771	2	Bolt-Shoulder
12	132-9353	1	Latch-Seat
19	3274-55	2	Screw-HSBH
20	19-1470	1	Screw-Shoulder

Motion Control Assembly

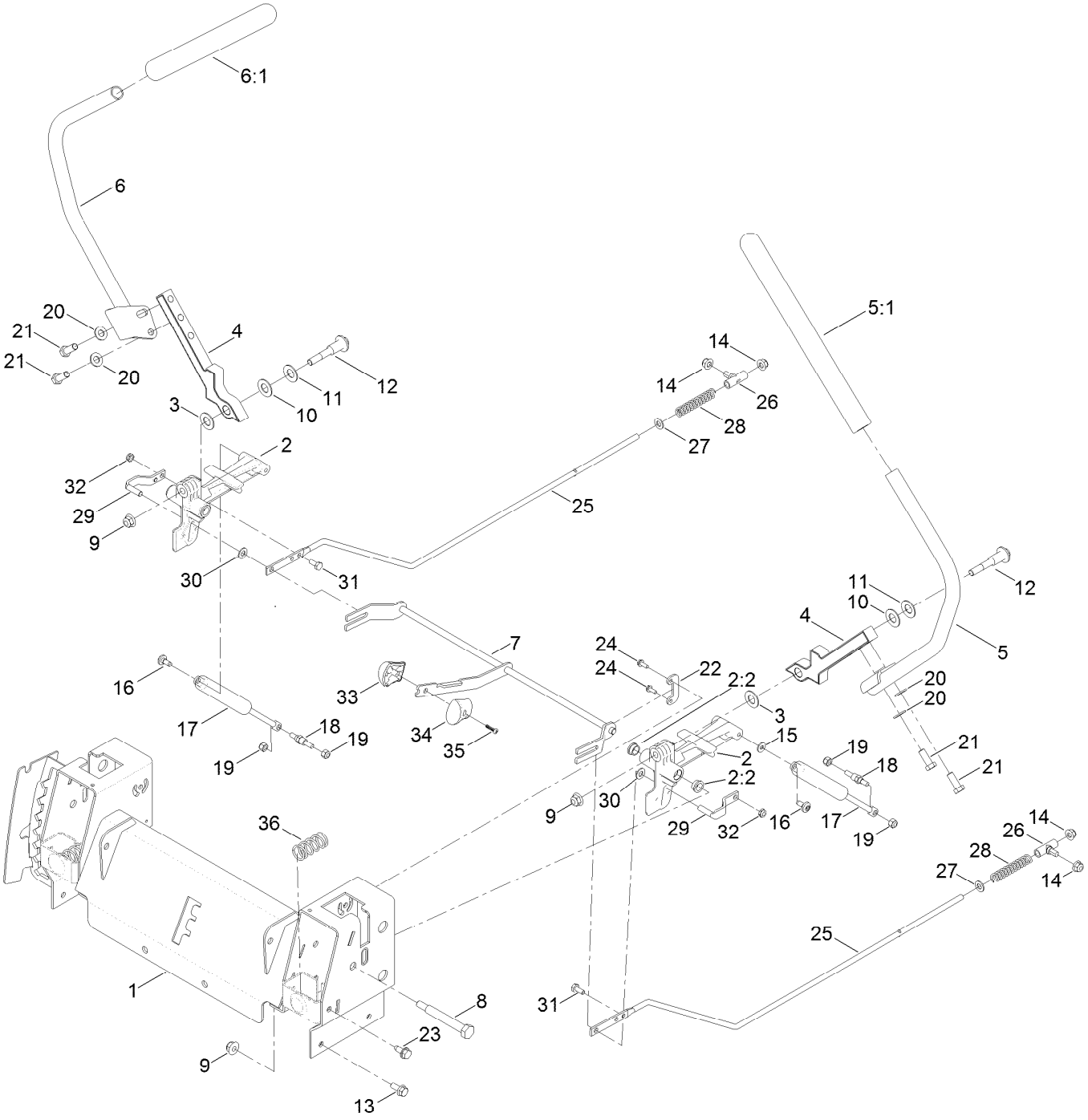

Motion Control Assembly (continued)

Ref.	Part Number	Qty.	Description
1	136-4156-03	1	Control Box ASM
2	119-3470	2	Actuator Arm ASM
2:2	256-156	2	Bushing-Flange
3	120-2273	2	Washer-Nylon
4	133-9299-05	2	Arm-Control
5	121-0730	1	Handle-Control, LH
5:1	121-0726	1	Grip
6	121-0731	1	Handle-Control, RH
6:1	121-0726	1	Grip
7	131-1094	1	Speed Control ASM
8	115-5099	2	Bolt-Pivot
9	104-8301	4	Nut-Flange, NI
10	117-1240	2	Washer
11	119-8925	2	Washer-Belleville
12	117-1198	2	Bolt-Pivot
13	3234-47	6	Screw-HHF
14	104-8300	10	Nut-Flange, NI
15	119-8952	2	Washer
16	120-7950	2	Screw-Shoulder
17	131-4132	2	Damper
18	110-6810	2	Stud-Damper
19	3296-42	4	Nut-Lock, NI
20	3256-24	4	Washer-Flat
21	323-6	4	Screw-HH
22	117-5385	2	Retainer
23	32144-70	4	Screw-HWHTF
24	32144-1	4	Screw-Taptite
25	117-5388	2	Rod-Hydro
26	119-8842	2	Mount-Rod, Hydro
27	3256-23	2	Washer-Flat
28	1-603807	2	Spring-Return, Neutral
29	119-3303	2	Pin-Rod, Hydro
30	93-6079	2	Spacer-Nylon
31	321-3	2	Screw-HH
32	3296-56	2	Nut-Lock, NI
33	119-8935	1	Knob-RH
34	119-8936	1	Knob-LH
35	94-4496	1	Screw-PPH
36	119-8876	2	Spring-Return

Engine and Muffler Assembly

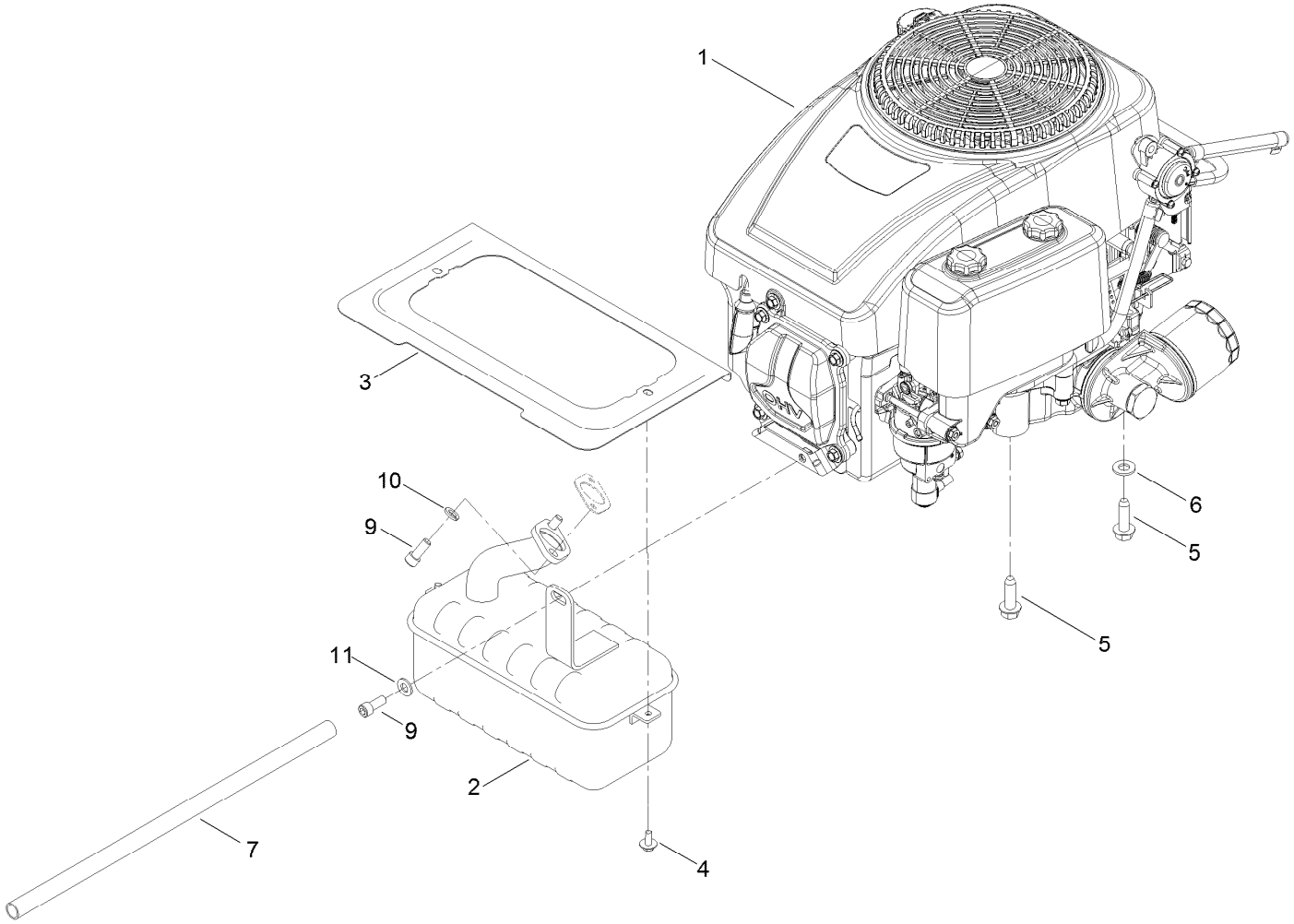

Engine and Muffler Assembly (continued)

Ref.	Part Number	Qty.	Description
1	121-0412	1	Engine-1P92F-1
2	130-0691	1	Muffler
3	131-1071-03	1	Shield-Heat
4	46-8560	2	Screw-HHFTF
5	32144-109	4	Screw-Taptite
6	3256-24	3	Washer-Flat
7	106-7022	1	Tube-Drain, Oil
9	3274-10	3	Screw-HSH
10	3253-4	2	Washer-Lock
11	3256-23	1	Washer-Flat

Fuel System Assembly

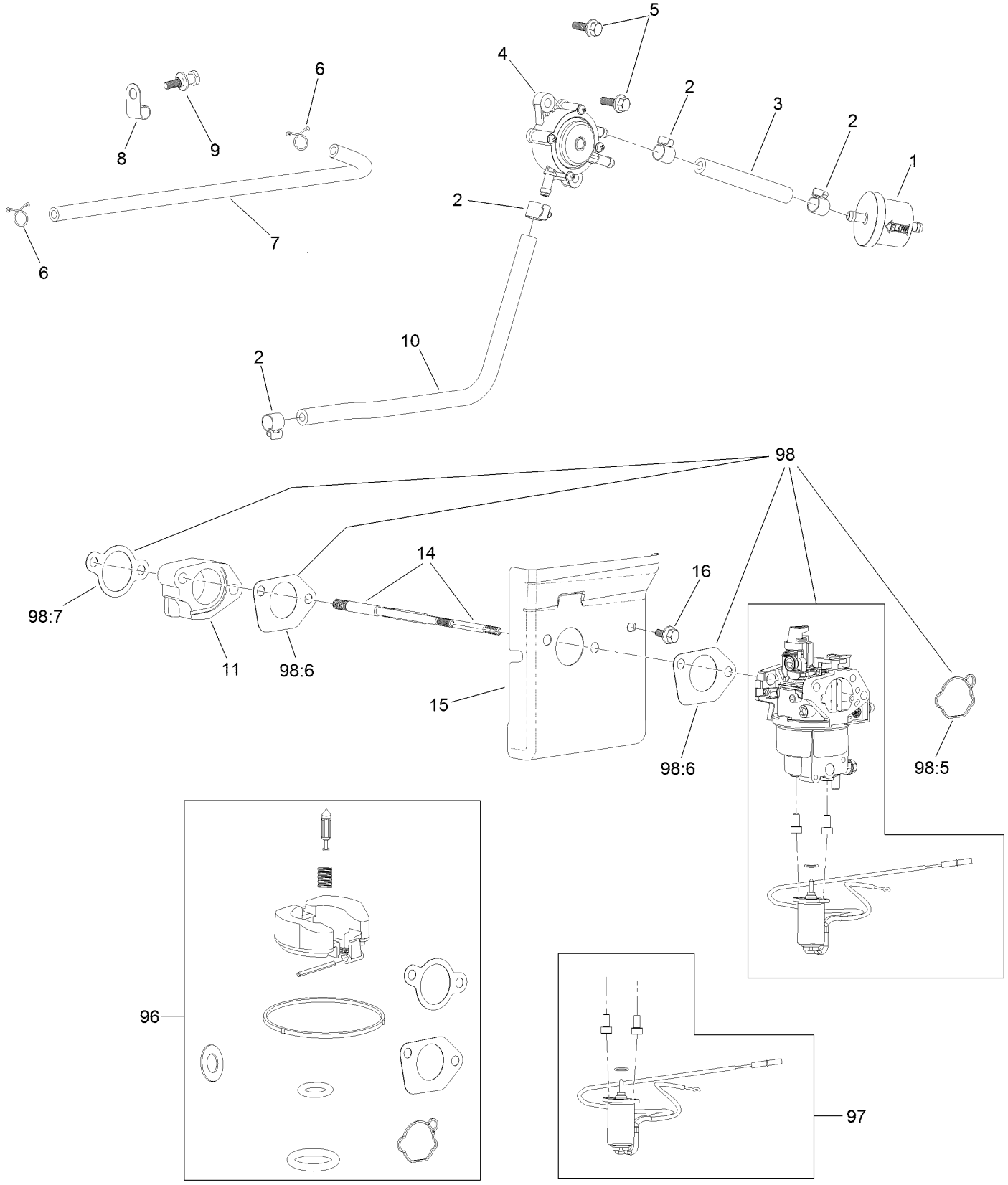

Fuel System Assembly (continued)

Ref.	Part Number	Qty.	Description
1	133-1563	1	Filter-Fuel
2	120-4251	4	Clamp-Fuel Line
3	120-4371	1	Line-Fuel
4	120-4353	1	Pump-Pulse, Fuel
5	120-4232	2	Screw-HHF
6	121-0114	2	Clamp-Hose
7	120-4372	1	Line-Pulse
8	120-4287	1	Clamp-J
9	120-4217	1	Screw-Shoulder, HH
10	120-4370	1	Line-Fuel
11	127-9181	1	Insulator-Carburetor
12	127-9189	1	Cap-Seal ●
13	127-9187	1	Clamp-Hose ●
14	120-4202	2	Stud-Mount, Carburetor
15	127-9182	1	Shroud
16	120-4216	1	Screw-HHF
96	127-9194	1	Carb Repair Kit With Gaskets
97	127-9190	1	Solenoid Kit
98	127-9183	1	Carburetor Kit
98:5	127-9185	1	Gasket-Carburetor
98:6	120-4247	2	Gasket-Carburetor
98:7	120-4250	1	Gasket-Carburetor
99	133-9929	1	High Altitude Kit ●

● Not illustrated

Air Intake and Filtration Assembly

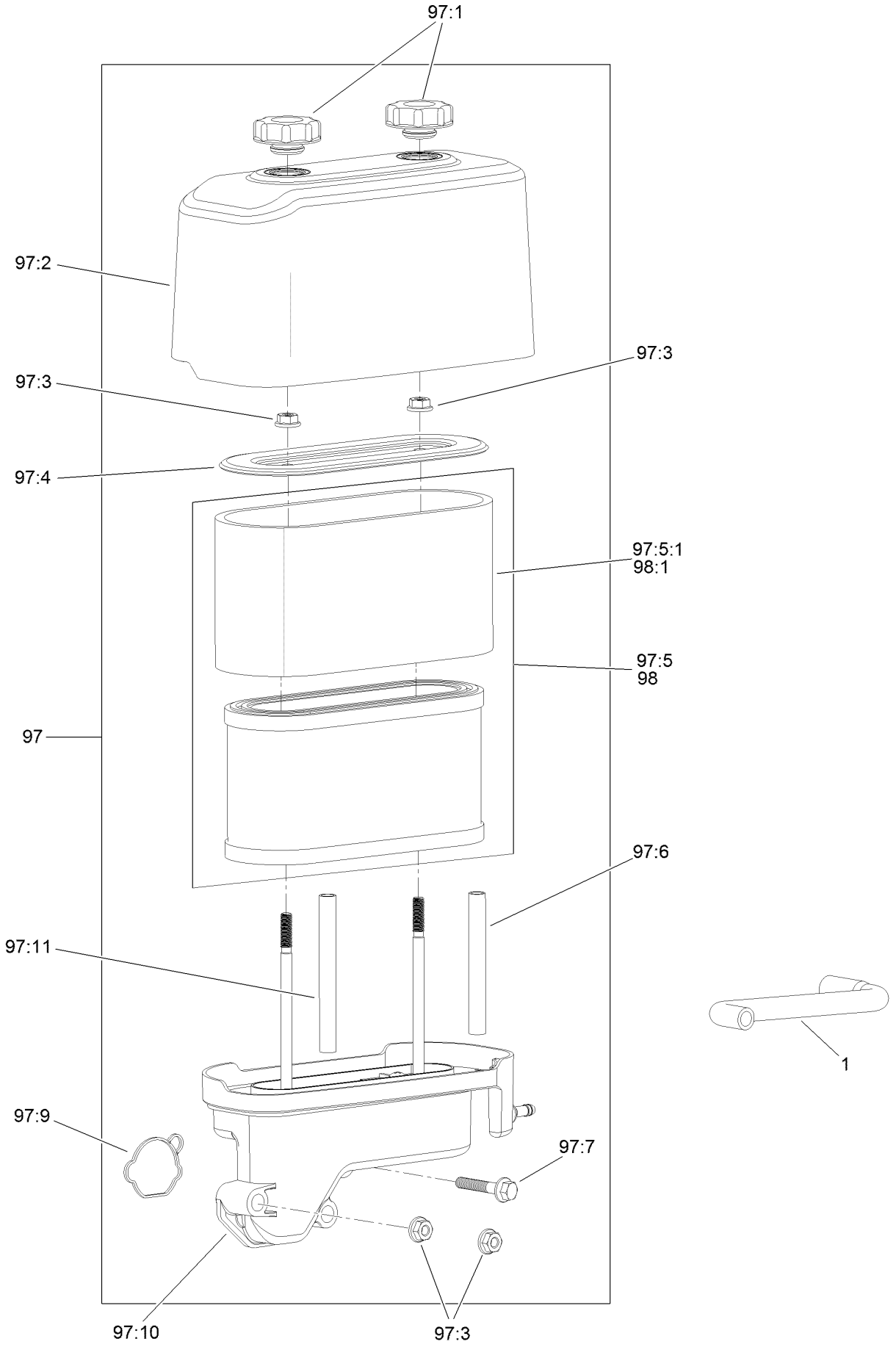

Air Intake and Filtration Assembly (continued)

Ref.	Part Number	Qty.	Description
1	120-4255	1	Tube-Breather
97	127-9186	1	Air Cleaner Kit
97:1	120-4312	2	Nut-Speed
97:2	120-4311	1	Cover-Filter, Air
97:3	120-4236	4	Nut-Flange
97:4	120-4310	1	Retainer-Air Filter
97:5		1	Air Filter Kit ●
97:5:1	120-4309	1	Prefilter
97:6	120-4333	1	Spacer-Filter, Air
97:7	120-4284	1	Screw-HHF
97:9	127-9185	1	Gasket-Carburetor
97:10	127-9191	1	Base-Filter, Air
97:11	120-4334	1	Spacer-Filter, Air
98	127-9193	1	Air Filter Kit
98:1	120-4309	1	Prefilter

● Not serviced separately

Ignition and Electrical Assembly

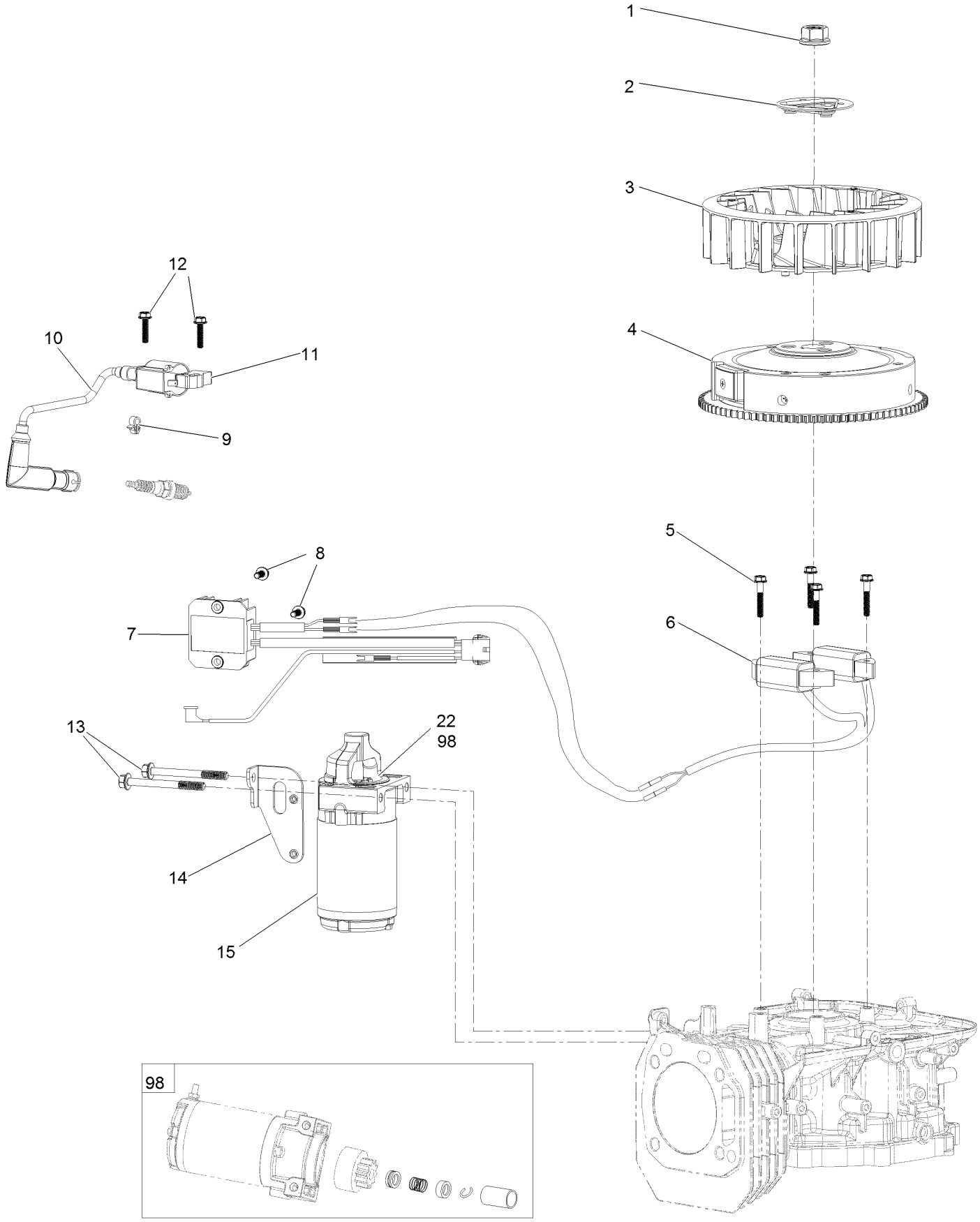

Ignition and Electrical Assembly (continued)

Ref.	Part Number	Qty.	Description
1	120-4213	1	Nut-Flange
2	120-4212	1	Pulley-Starter
3	120-4211	1	Fan-Cooling
4	120-4399	1	Flywheel
5	120-4223	4	Screw-HHF
6	127-9176	1	Alternator
7	127-9178	1	Voltage Regulator
8	120-4216	3	Screw-HHF
9	120-4316	1	Clamp-Wire
10	120-4226	1	Boot-Plug, Spark
11	127-9177	1	Ignition Coil ASM
12	120-4225	2	Screw-HHF
13	120-4231	2	Screw-HHF
14	120-4230	1	Bracket-Starter
15	133-9832	1	Motor-Starter
22	133-1562	1	Pinion-Starter
98	120-4392	1	Starter Repair Kit

Crankcase Assembly

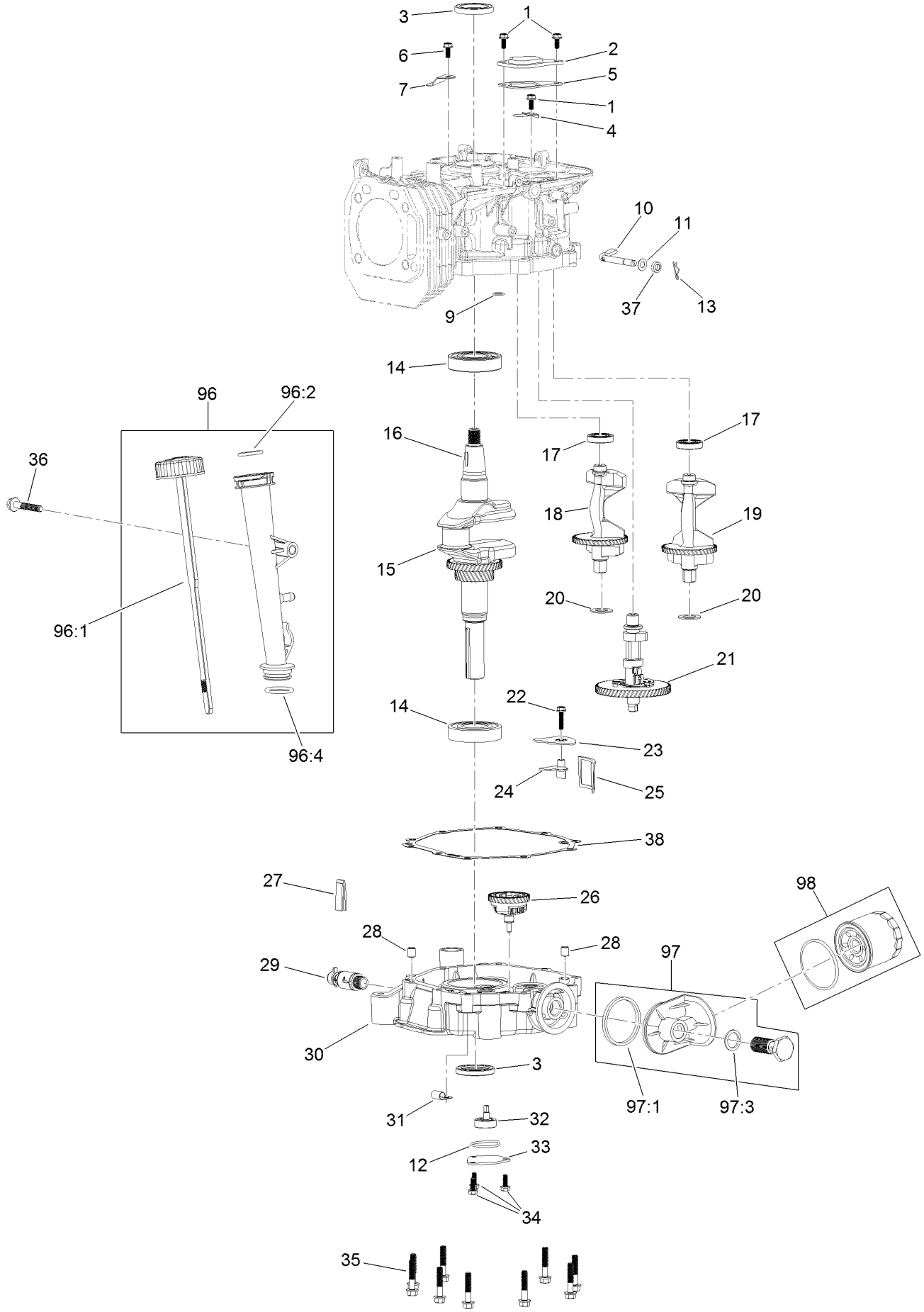

Crankcase Assembly (continued)

Ref.	Part Number	Qty.	Description
1	120-4216	3	Screw-HHF
2	120-4265	1	Plate-Breather
3	120-4267	2	Seal-Oil
4	120-4263	1	Valve-Reed
5	120-4264	1	Gasket-Breather
6	120-4234	1	Screw-HHF
7	120-4268	1	Retainer
9	120-4262	1	O-Ring
10	120-4382	1	Shaft-Governor
11	120-4258	1	Washer-Plain
12	120-4343	1	Seal-Pump, Oil
13	120-4256	1	Pin-Hair
14	120-4261	2	Bearing-Ball
15	120-4293	1	Crankshaft
16	120-4320	1	Key-Woodruff
17	120-4266	2	Bearing-Ball
18	127-9179	1	Shaft-Balance, R
19	127-9180	1	Shaft-Balance, L
20	120-4295	2	Washer
21	120-4297	1	Camshaft
22	120-4225	1	Screw-HHF
23	120-4342	1	Cover-Strainer, Oil
24	120-4279	1	Plate-Baffle, Oil

Ref.	Part Number	Qty.	Description
25	120-4341	1	Strainer-Oil
26	120-4338	1	Gear-Governor
27	120-4275	1	Deflector-Oil, Rubber
28	120-4274	2	Pin-Dowel
29	120-4321	1	Valve-Drain, Oil
30	120-4327	1	Cover-Crankcase
31	127-9188	1	Clamp-Hose
32	120-4344	1	Oil Pump ASM
33	120-4270	1	Cover-Pump, Oil
34	120-4232	3	Screw-HHF
35	120-4273	10	Screw-HHF
36	120-4284	1	Screw-HHF
37	120-4257	1	Seal-Oil
38	120-4260	1	Gasket-Crankcase
96	120-4355	1	Dipstick And Tube Kit
96:1	120-4350	1	Dipstick ASM
96:2	120-4348	1	O-Ring
96:4	120-4282	1	O-Ring
97	120-4363	1	Oil Adaptor Kit
97:1	120-4362	1	Seal-Adaptor, Oil
97:3	120-4360	1	Washer-Filter, Oil
98	120-4276	1	Filter-Oil

Governor Control Assembly

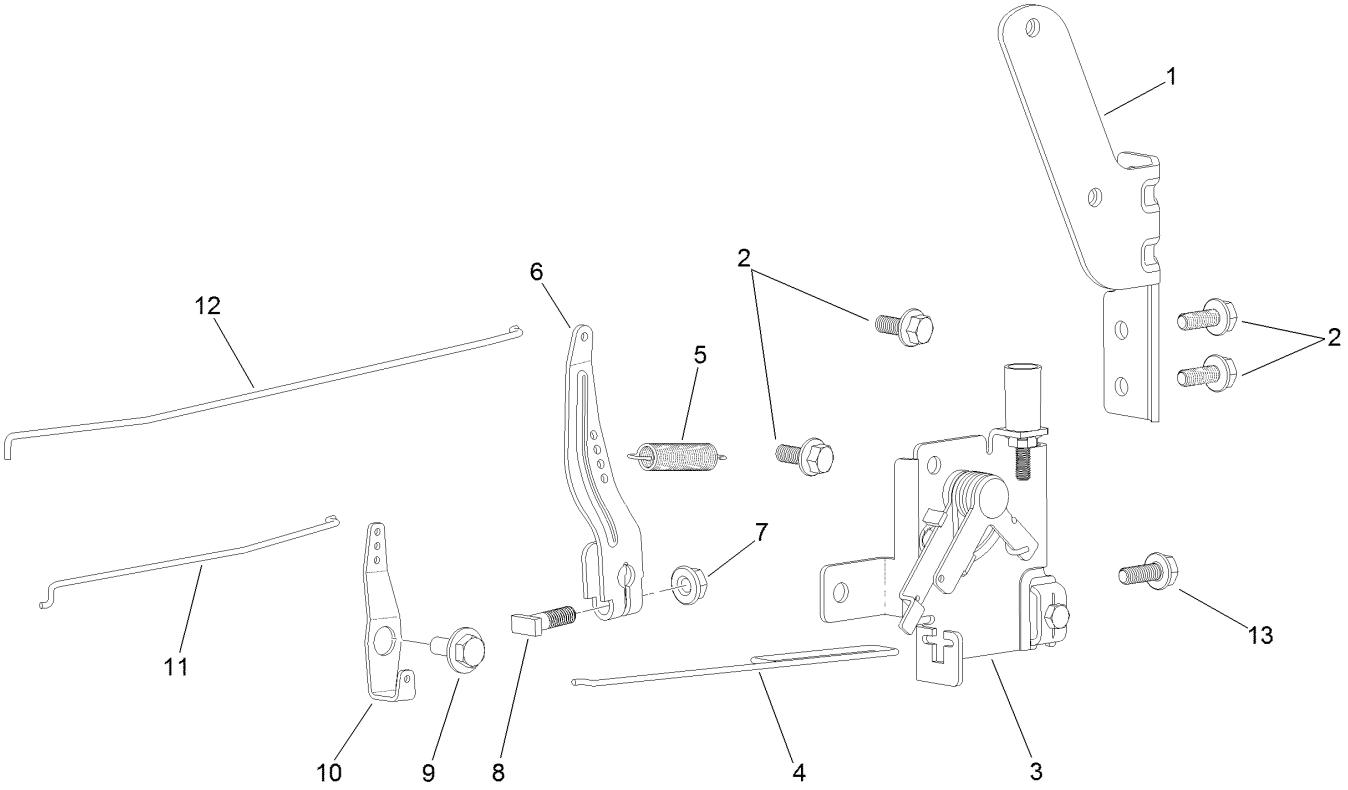

Governor Control Assembly (continued)

Ref.	Part Number	Qty.	Description
1	120-4357	1	Bracket-Pump, Fuel
2	120-4234	4	Screw-HHF
3	120-4358	1	Control-Throttle
4	120-4243	1	Rod-Throttle
5	120-4337	1	Spring-Governor
6	120-4352	1	Arm-Governor
7	120-4236	1	Nut-Flange
8	120-4238	1	Bolt-Arm, Governor
9	120-4241	1	Screw-Shoulder, HHF
10	120-4242	1	Bellcrank-Choke
11	120-4240	1	Rod-Choke
12	120-4239	1	Rod-Governor
13	120-4232	1	Screw-HHF

Piston and Cylinder Head Assembly

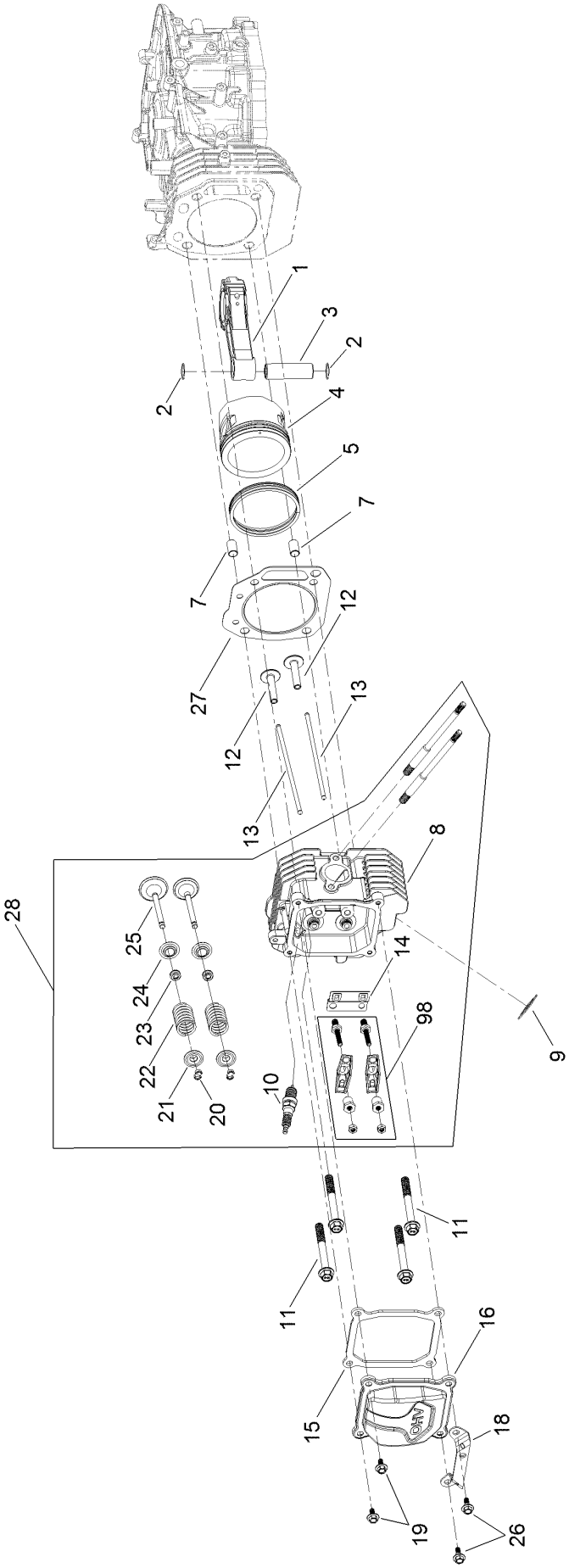

Piston and Cylinder Head Assembly (continued)

Ref.	Part Number	Qty.	Description
1	120-4292	1	Connecting Rod ASM
2	120-4288	2	Ring-Retaining, Piston Pin
3	120-4291	1	Pin-Piston
4	120-4290	1	Piston
5	120-4289	1	Ring Set
7	120-4200	2	Pin-Dowel
8	120-4203	1	Head-Cylinder
9	120-4317	1	Gasket-Exhaust
10	77-7330	1	Plug-Spark
11	120-4205	4	Screw-HHF
12	120-4298	2	Lifter-Valve
13	120-4340	2	Rod-Push
14	120-4300	1	Plate-Guide, Push Rod
15	120-4206	1	Gasket-Cover, Valve
16	120-4207	1	Cover-Valve
18	120-4345	1	Bracket-Muffler
19	120-4209	2	Screw-Shoulder, HHF
20	120-4307	4	Keeper-Valve
21	120-4306	2	Retainer-Spring, Valve
22	120-4305	2	Spring-Valve
23	120-4304	2	Seal-Stem, Valve
24	120-4303	2	Seat-Spring, Valve
25	120-4302	2	Valve Set
26	120-4210	2	Screw-Shoulder, HHF
27	120-4201	1	Gasket-Cyclinder
28	133-9845	1	Complete Head ASM
98	120-4301	1	Rocker Arm Kit

Blower Housing Assembly

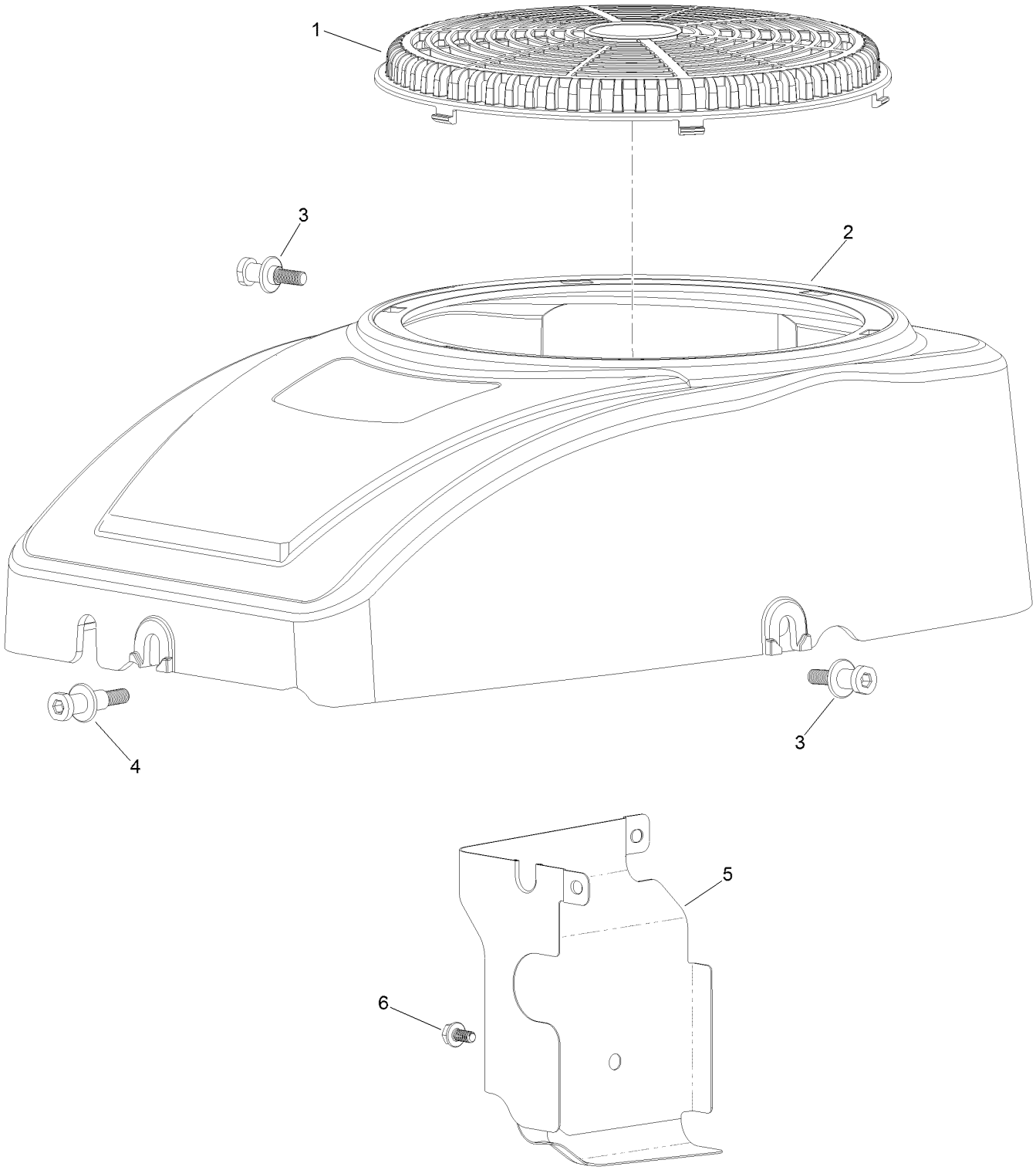

Blower Housing Assembly (continued)

Ref.	Part Number	Qty.	Description
1	120-4219	1	Screen-Stationary
2	120-4218	1	Shroud-Fan
3	120-4217	2	Screw-Shoulder, HH
4	120-4214	1	Screw-Shoulder, HH
5	120-4215	1	Shield
6	120-4216	1	Screw-HHF

Gasket and Seal Kit Assemby

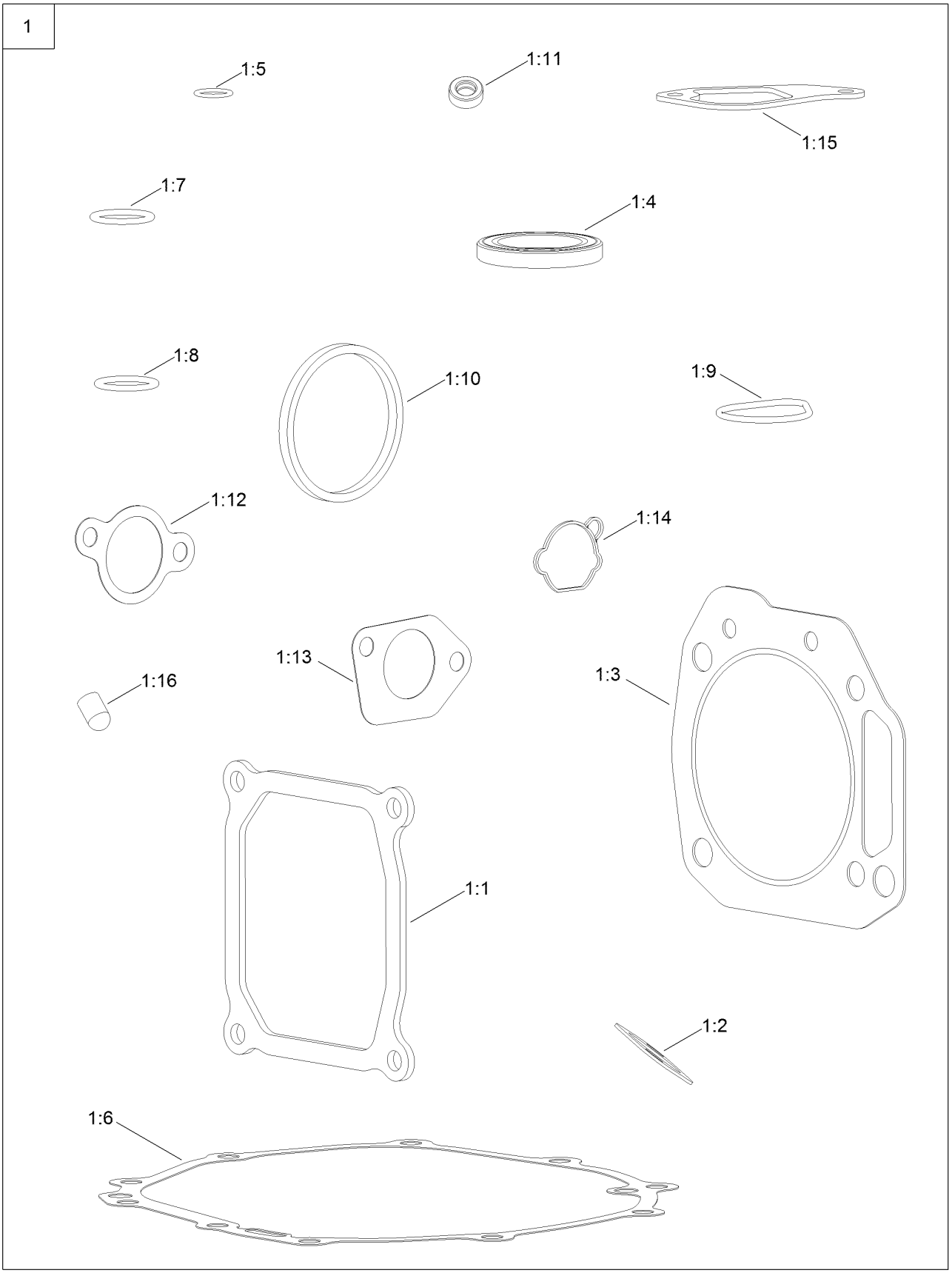

Gasket and Seal Kit Assemby (continued)

Ref.	Part Number	Qty.	Description
1	127-9192	1	Gasket And Seal Kit
1:1	120-4206	1	Gasket-Cover, Valve
1:2	120-4317	1	Gasket-Exhaust
1:3	120-4201	1	Gasket-Cyclinder
1:4	120-4267	2	Seal-Oil
1:5	120-4262	1	O-Ring
1:6	120-4260	1	Gasket-Crankcase
1:7	120-4348	1	O-Ring
1:8	120-4282	1	O-Ring
1:9	120-4343	1	Seal-Pump, Oil
1:10	120-4362	1	Seal-Adaptor, Oil
1:11	120-4257	1	Seal-Oil
1:12	120-4250	1	Gasket-Carburetor
1:13	120-4247	2	Gasket-Carburetor
1:14	127-9185	1	Gasket-Carburetor
1:15	120-4264	1	Gasket-Breather
1:16	127-9189	1	Cap-Seal

Body Styling and Fuel Tank Assembly

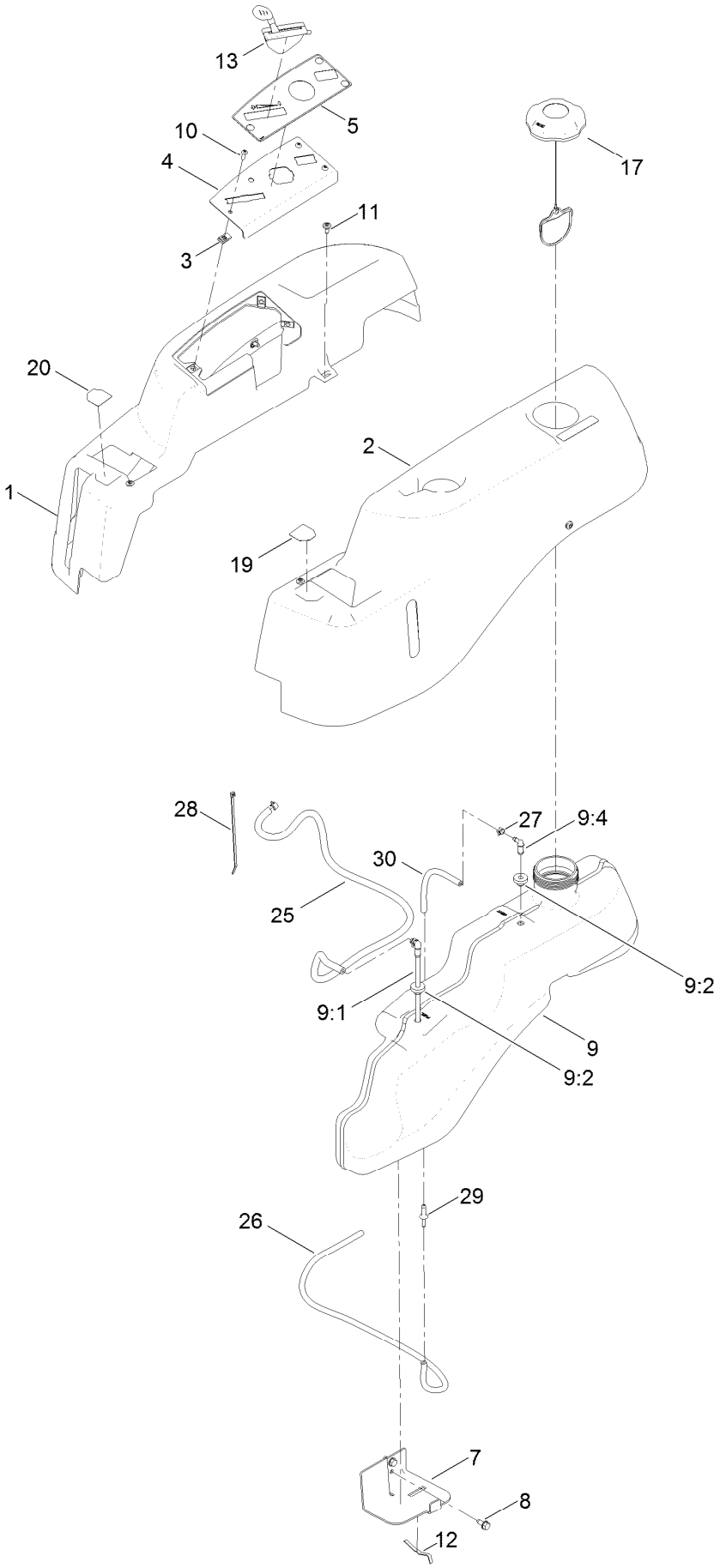

Body Styling and Fuel Tank Assembly (continued)

Ref.	Part Number	Qty.	Description
1	119-3335	1	Pod-RH
2	119-3334	1	Pod-LH
3	107069	3	Clip
4	119-3378-03	1	Plate-Control
5	121-0771	1	Decal-Panel, Control
7	119-3476-03	1	Support-Tank, Front
8	32144-70	2	Screw-HWHTF
9	119-3324	1	Fuel Tank ASM
9:1	121-0793	1	Connector-Elbow, 90 DEG
9:2	46-6560	2	Bushing
9:4	117-7400	1	Fitting-Plastic
10	3258-166	3	Screw-PRH
11	120-7950	6	Screw-Shoulder
12	609830	2	Spring
13	121-0767	1	Cable-Throttle And Choke
17	120-5461	1	Cap-Fuel, Ratcheting
19	119-8814	1	Decal-Control Lever, LH
20	119-8815	1	Decal-Control Lever, RH
25	109-0307	1	Hose-Fuel
26	110-3254	1	Hose-Fuel
27	2412-98	3	Clamp-Hose
28	614249	3	Tie-Cable
29	117-5399	1	Adaptor-Orifice
30	110-1876	1	Hose-Fuel

Battery and Electrical Assembly

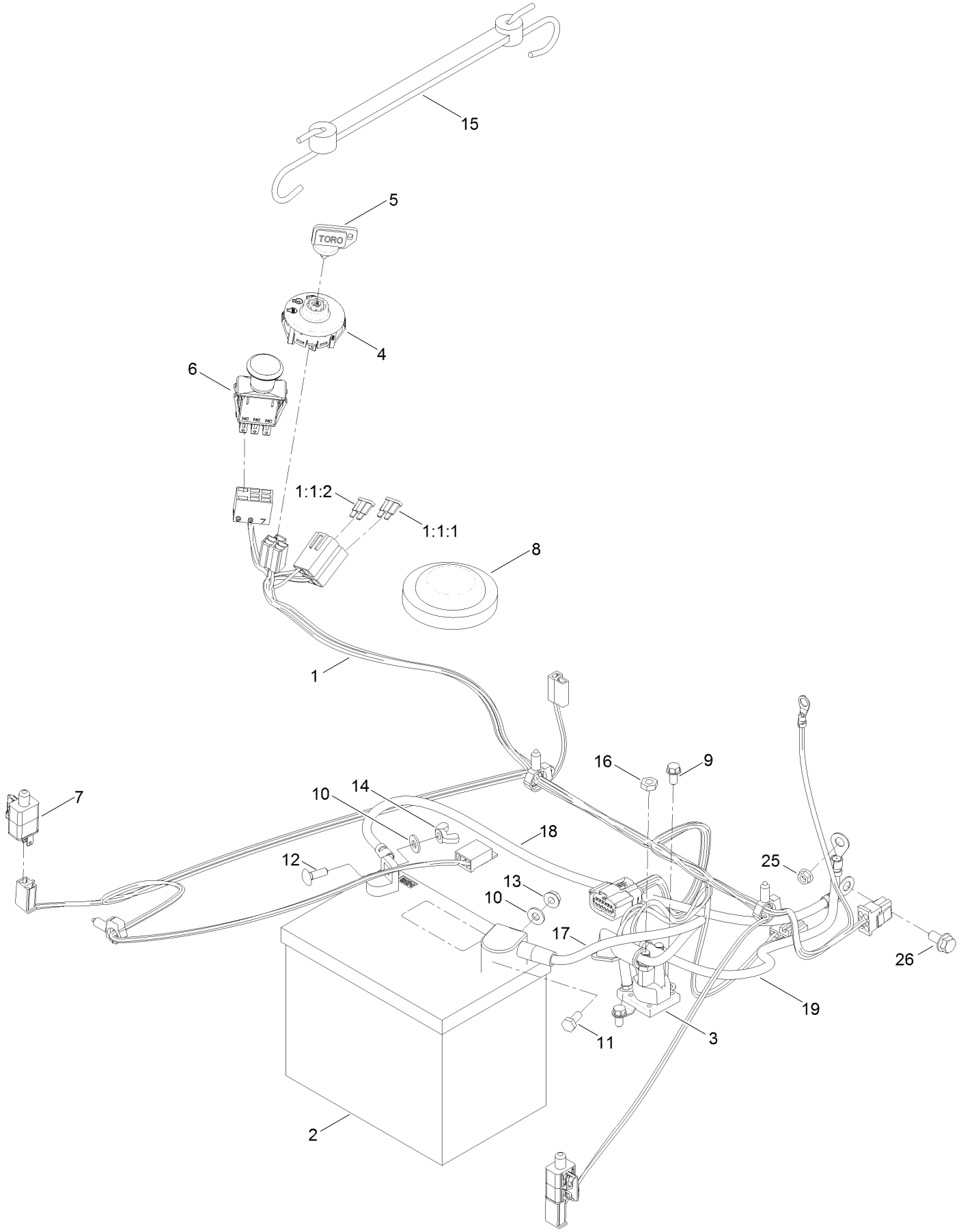

Battery and Electrical Assembly (continued)

Ref.	Part Number	Qty.	Description
1	136-7482	1	Harness-Wire
1:1:1	109103	1	Fuse-Blade, 30 Amp
1:1:2	109102	1	Fuse-Blade, 25 Amp
2	105-1692	1	Battery
3	117-1197	1	Solenoid
4	117-2221	1	Switch-Ignition
5	63-8360	1	Key-Ignition
6	103-5221	1	Switch-PTO
7	110-6765	2	Switch
8	100-3524	1	Switch-Seat
9	32144-4	2	Screw-HWH
10	3256-22	2	Washer-Flat
11	321-3	1	Screw-HH
12	3229-1	1	Bolt-CARR
13	32128-33	1	Nut-HF
14	32103-22	1	Nut-Wing
15	104-2466	1	Holddown-Battery
16	3220-2	2	Nut-Jam
17	119-8897	1	Cable-Battery, Red
18	121-0711	1	Cable-Battery, Positive
19	119-8899	1	Cable-Battery, Black
25	33003-00	1	Nut-HF
26	3234-14	1	Screw-HHF

42 Inch Deck, Belt and Blade Assembly

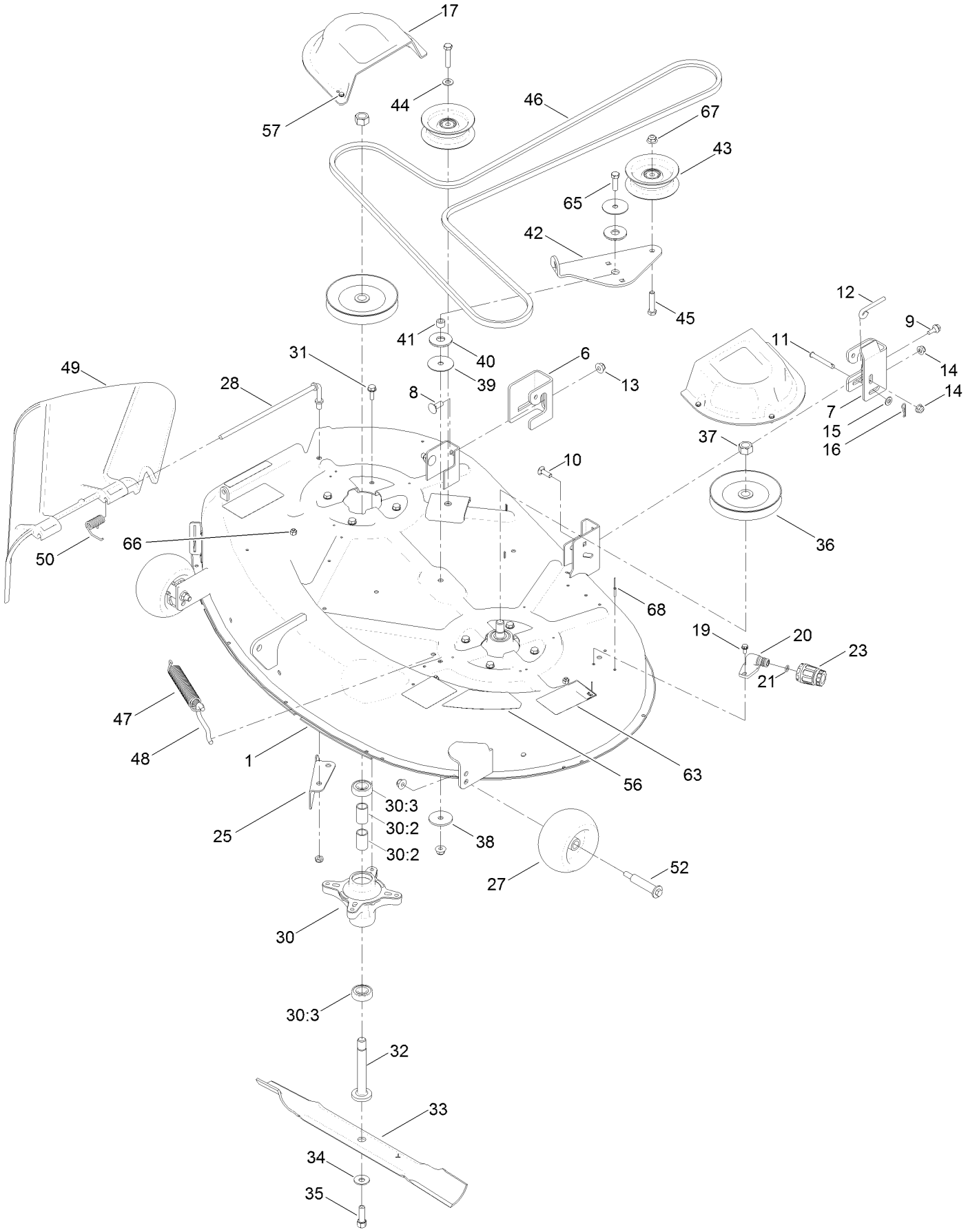

42 Inch Deck, Belt and Blade Assembly (continued)

Ref.	Part Number	Qty.	Description
1	131-3604	1	42 Inch Deck And Decal ASM
6	131-4138	1	Bracket-Hanger, RH
7	131-1091	1	Bracket-Hanger, LH
8	3231-2	2	Bolt-CARR
9	120-7024	1	Screw-Shoulder, HHF
10	3230-22	1	Screw-CARR
11	110-0618	1	Pin-Clevis
12	131-0955	1	Rod-Level, Deck
13	104-8301	6	Nut-Flange, NI
14	104-8300	2	Nut-Flange, NI
15	3256-23	1	Washer-Flat
16	1-806003	1	Pin-Cotter
17	108-7889	2	Cover-Belt
19	32144-4	2	Screw-HWH
20	95-2747	1	Fitting-Washout
21	46-6290	1	O-Ring
23	95-3270	1	Connector-Hose
25	112-3983-03	1	Baffle-Cutoff
27	1-603299	2	Roller-Scalp, Anti
28	112-4026	1	Rod-Pivot
30	121-0751	2	Spindle ASM
30:2	120-7935	2	Spacer
30:3	38-7820	2	Bearing-Ball
31	32144-41	8	Screw-Taptite
32	117-7268	2	Shaft-Spindle
33	131-3939-03	2	Blade-High Lift
34	3290-465	2	Washer-Belleville
35	26-0671	2	Screw-HH
36	125-5574	2	Pulley
37	3219-6	2	Nut-Hex
38	63-7400	1	Washer-Rebound
39	120-2229	2	Washer
40	114-0463	2	Washer-Friction, Composite
41	115-4986	1	Spacer
42	114-8540	1	Arm-Idler
43	106-2175	2	Pulley-Idler, Flat
44	3256-24	1	Washer-Flat
45	323-9	2	Screw-HH
46	119-8819	1	V-Belt
47	106-2177	1	Spring-Extension
48	88-5970	1	Hook-Return, Spring
49	112-3951	1	Deflector
50	110-6694	1	Spring-Torsion
52	112-3977	2	Bolt-Shoulder
56	117-1222	1	Decal
57	32144-1	6	Screw-Taptite
63	3296-42	3	Nut-Lock, NI
65	323-7	1	Screw-HH
66	321-2	3	Screw-HH
67	3296-59	1	Nut-Lock, NI
68	3290-282	2	Rivet-Blind

42 Inch Deck Decal Assembly No. 131-3604

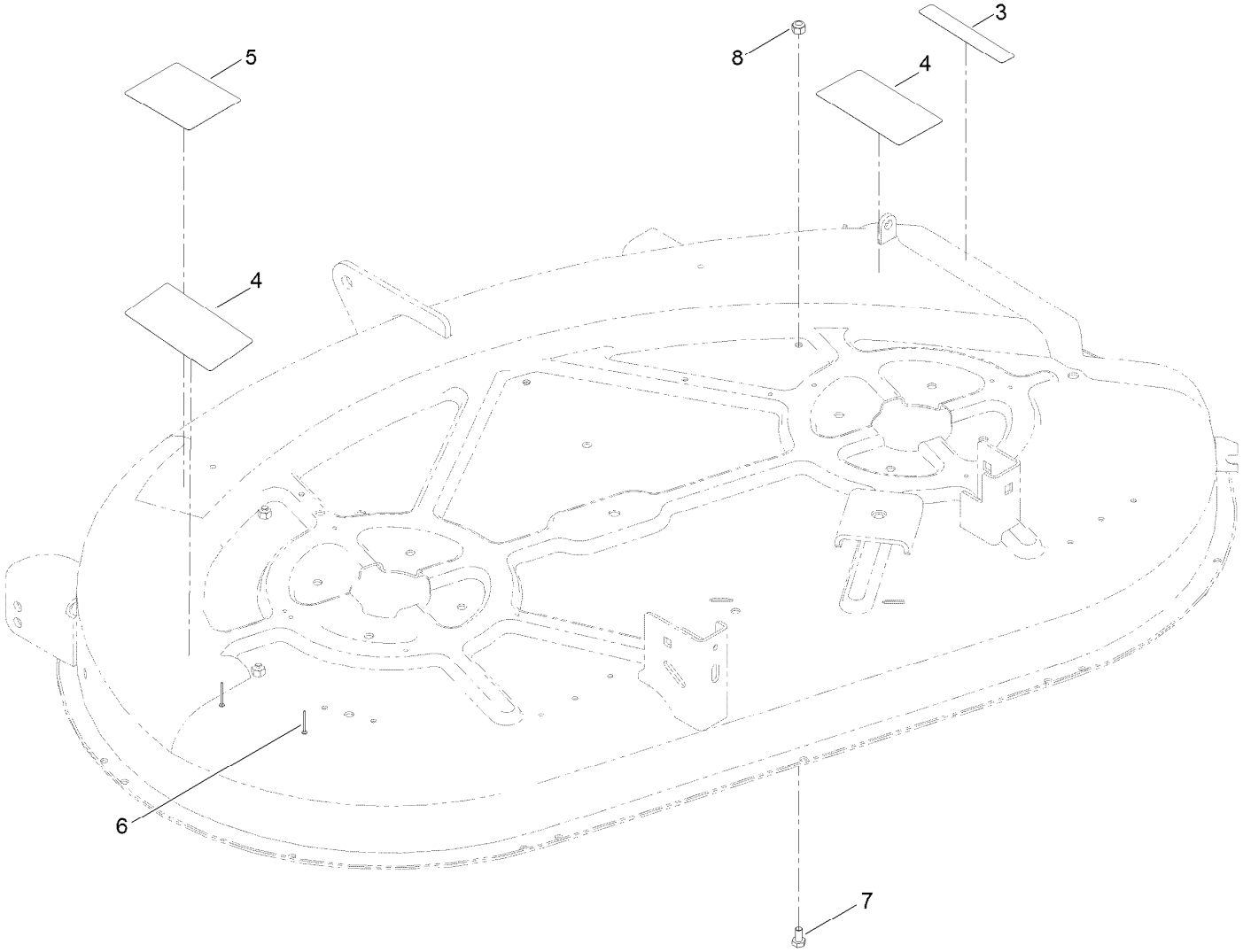

42 Inch Deck Decal Assembly No. 131-3604 (continued)

Ref.	Part Number	Qty.	Description
3	93-7009	1	Decal-Danger
4	132-0872	2	Decal-Danger, Deck
5	105-7015	1	Decal-Routing, Belt
6	3290-282	2	Rivet-Blind
7	321-2	3	Screw-HH
8	3296-42	3	Nut-Lock, NI

Model Specific Decal Assembly

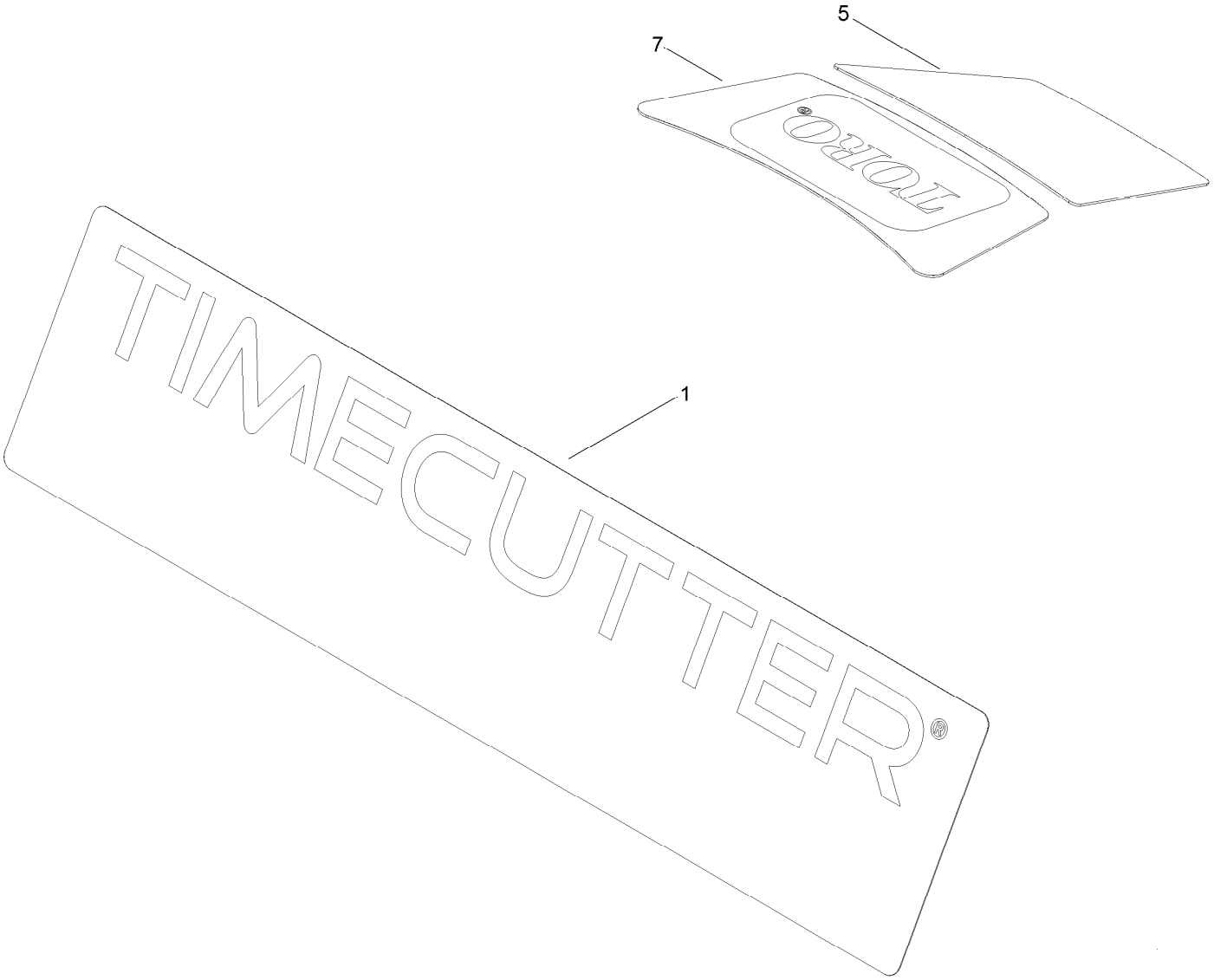

Model Specific Decal Assembly (continued)

Ref.	Part Number	Qty.	Description
1	119-8869	1	Decal-Timecutter
5	130-0682	1	Decal-Displacement, Engine
7	125-1700	1	Decal-Engine

Speed Control Decal, HOC Decal and Service Decal Assembly

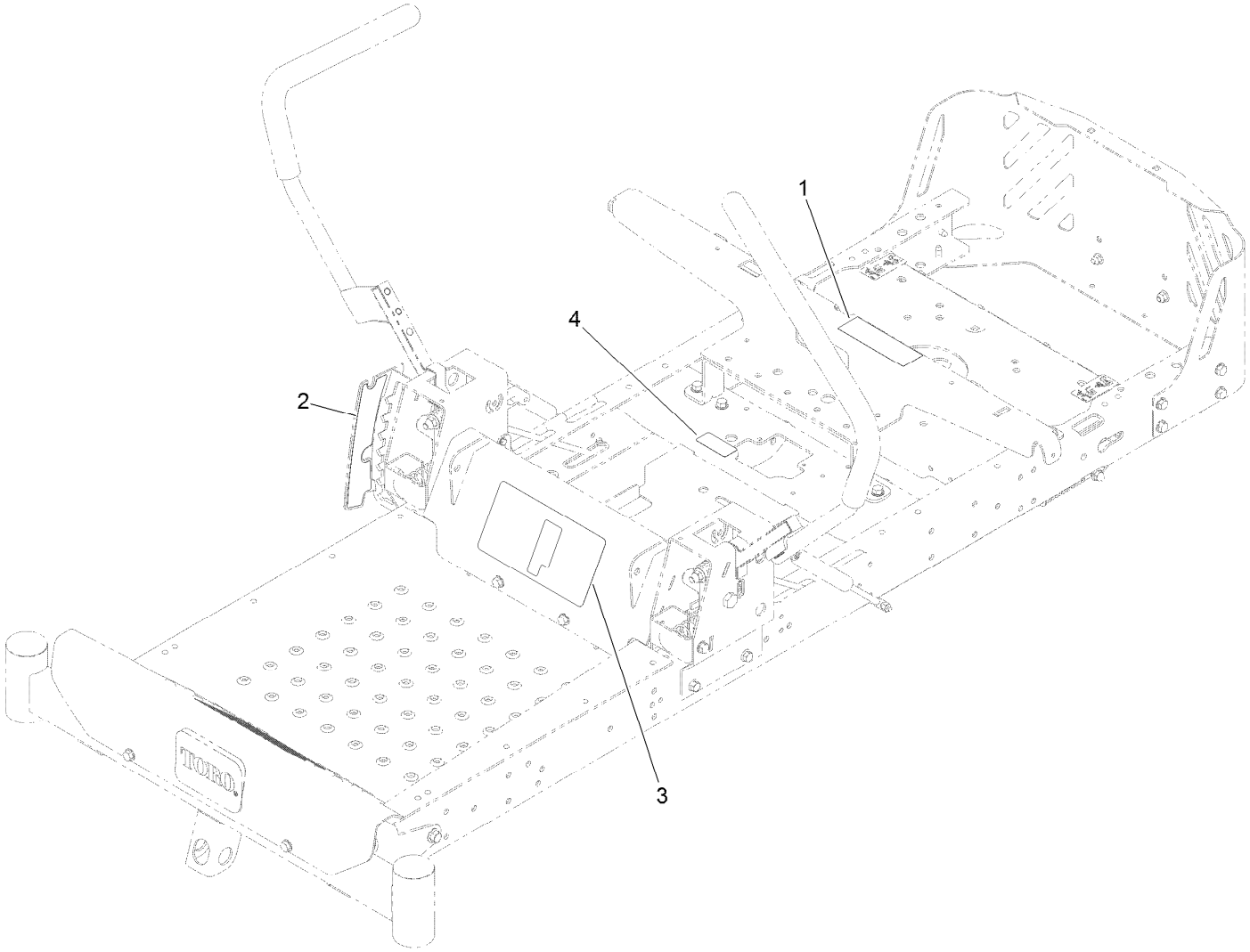

Speed Control Decal, HOC Decal and Service Decal Assembly (continued)

Ref.	Part Number	Qty.	Description
1	106-8717	1	Decal-Service, CE
2	119-8871	1	Decal-HOC
3	131-3947	1	Decal-Control, Speed
4	121-5684	1	Decal-Location, Service Dealer

Clutch Assembly

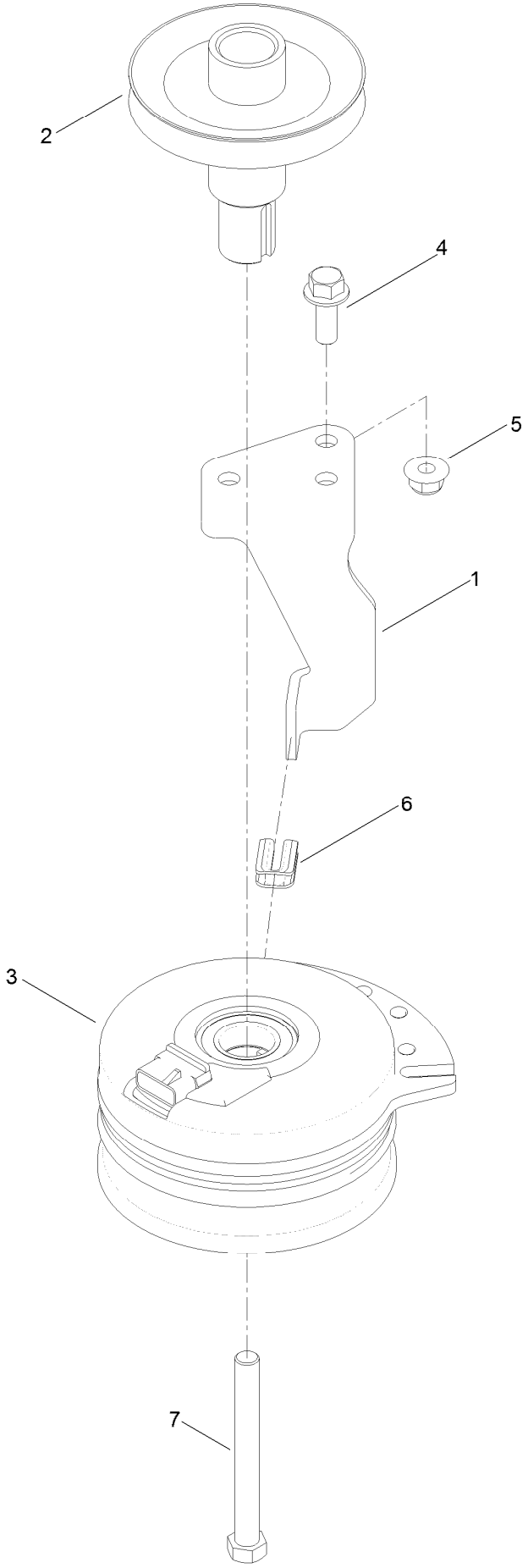

Clutch Assembly (continued)

Ref.	Part Number	Qty.	Description
1	119-8884	1	Stop-Clutch
2	130-6854	1	Pulley-Engine
3	117-7468	1	Clutch-Electric
4	3234-42	1	Screw-HHF
5	104-8301	1	Nut-Flange, NI
6	120-2217	1	Isolator-Clutch
7	3212-16	1	Screw-HH

Attachments and Accessories

For 74720 TimeCutter SS 4200 Riding Mower

Product Name	Model/Part
Armrest Kit	105-6978
42in Blowout Ring Kit	114-1620
Hourmeter Kit	116-5461
All Season Synthetic Oil	117-0066
Fuel Stabilizer (4oz)	117-0089
Fuel Stabilizer (16oz)	117-0090
Seat Cover W/o Arm Rest - TC 18in	117-0096
Striping Kit	120-7905
Jack Mount Kit	126-5251
Jack Kit	127-6666
Replacement Blade Kit	131-3939-03P
Attachment Mount Kit	131-3966
42in Recycler Kit	131-4182
Weight Kit	131-7658
Deluxe Seat Kit	131-7699
Floor Mat Kit	132-6921
10w30 4-cycle Engine Oil (32oz Bottle)	38280
Toro 4-cycle Sae 30 Oil (32oz Bottle)	38903
Storage Cover	490-7516
Foot Assist Deck Lift Kit, 2011 and After Zero-Turn-Radius Riding Mower	79010
Sunshade Kit	79011
Cargo Carrier	79040
Assist Handle and Step Kit	79339
42in Bagger	79391

Notes:

Notes:

Notes:

TORO®

Count on it.