Form No. 3409-585 Rev A

TORO®

Count on it.

Operator's Manual

Groundsmaster® 7200 or 7210 Series Traction Unit

Model No. 30487TC—Serial No. 400000000 and Up
Model No. 30495—Serial No. 400000000 and Up
Model No. 30495TC—Serial No. 400000000 and Up

Register at www.Toro.com.
Original Instructions (EN)

CE

3409-585 A

This product complies with all relevant European directives; for details, please see the separate product-specific Declaration of Conformity (DOC) sheet.

⚠ WARNING

CALIFORNIA
Proposition 65 Warning

This product contains a chemical or chemicals known to the State of California to cause cancer, birth defects, or reproductive harm.

Diesel engine exhaust and some of its constituents are known to the State of California to cause cancer, birth defects, and other reproductive harm.

It is a violation of California Public Resource Code Section 4442 or 4443 to use or operate the engine on any forest-covered, brush-covered, or grass-covered land unless the engine is equipped with a spark arrester, as defined in Section 4442, maintained in effective working order or the engine is constructed, equipped, and maintained for the prevention of fire.

This spark ignition system complies with Canadian ICES-002.

Introduction

This machine is a ride-on, rotary-blade lawn mower intended to be used by professional, hired operators in commercial applications. It is primarily designed for cutting grass on well-maintained lawns in parks, sports fields, and on commercial grounds. It is not designed for cutting brush, mowing grass and other growth alongside highways, or for agricultural uses.

Read this information carefully to learn how to operate and maintain your product properly and to avoid injury and product damage. You are responsible for operating the product properly and safely.

You may contact Toro directly at www.Toro.com for product safety and operation training materials, accessory information, help finding a dealer, or to register your product.

Whenever you need service, genuine Toro parts, or additional information, contact an Authorized Service Dealer or Toro Customer Service and have the model and serial numbers of your product ready. Figure 1 identifies the location of the model and serial numbers on the product. Write the numbers in the space provided.

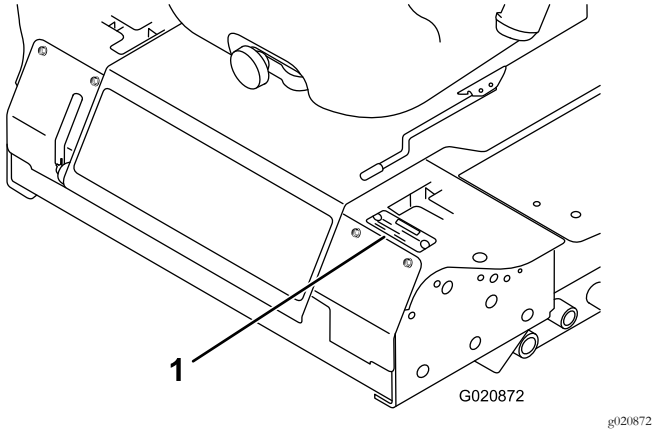

Figure 1

1. Model and serial number location

Model No. _____

Serial No. _____

This manual identifies potential hazards and has safety messages identified by the safety-alert symbol (Figure 2), which signals a hazard that may cause serious injury or death if you do not follow the recommended precautions.



Figure 2

1. Safety-alert symbol

This manual also uses 2 words to highlight information. **Important** calls attention to special mechanical information and **Note** emphasizes general information worthy of special attention.

© 2016—The Toro® Company
8111 Lyndale Avenue South
Bloomington, MN 55420

Contact us at www.Toro.com.
Printed in the USA
All Rights Reserved

Contents

Safety 4
General Safety 4
Sound and Vibration Level Information 4
Slope Indicator 5
Safety and Instructional Decals 6
Setup 12
1 Raising the Roll Bar 12
2 Installing the Mower Deck 12
3 Adjusting the Left, Front Caster Wheel 12
4 Checking the Tire Pressure 12
5 Installing Weights (for CE Compliance) 14
6 Checking the Fluid Levels 15
7 Reading the Manuals and Viewing the Training Materials 15
Product Overview 15
Controls 15
Specifications 17
Attachments/Accessories 18
Before Operation 18
Before Operation Safety 18
Adding Fuel 19
Checking the Engine-Oil 19
Checking the Cooling System 19
Checking the Hydraulic System 19
Using the Rollover Protection System (ROPS) 20
Think Safety First 21
Using the Safety-Interlock System 22
Positioning the Seat 23
During Operation 24
During Operation Safety 24
Operating the Parking Brake 24
Starting and Shutting Off the Engine 25
Driving the Machine 26
Operating the Mower 27
Adjusting the Height of Cut 27
Operating Tips 28
After Operation 29
After Operation Safety 29
Pushing the Machine by Hand 29
Transporting the Machine 30
Loading the Machine 31
Maintenance 32
Recommended Maintenance Schedule(s) 32
Daily Maintenance Checklist 33
Pre-Maintenance Procedures 34
Pre-Maintenance Safety 34
Unlatching the Seat 34
Lubrication 35
Greasing the Bearings and Bushings 35
Servicing the Mower-Deck Gear Box Lubricant 35
Engine Maintenance 36
Engine Safety 36
Checking the Air Cleaner 36
Servicing the Engine-Oil 37
Fuel System Maintenance 39
Servicing the Water Separator 39
Cleaning the Fuel Tank 39
Checking the Fuel Lines and Connections 40
Bleeding the Fuel System 40
Bleeding Air from the Injectors 40
Electrical System Maintenance 41
Electrical System Safety 41
Servicing the Battery 41
Storing the Battery 41
Checking the Fuses 41
Drive System Maintenance 42
Checking the Tire Pressure 42
Replacing the Caster Wheels and Bearings 43
Cooling System Maintenance 43
Cooling System Safety 43
Checking the Cooling System 43
Cleaning the Radiator 44
Brake Maintenance 44
Adjusting the Parking-Brake Interlock Switch 44
Belt Maintenance 45
Checking the Alternator-Belt Tension 45
Controls System Maintenance 46
Adjusting the Control-Lever Neutral-Interlock Switch 46
Adjusting the Control-Lever Neutral Return 46
Adjusting the Traction Drive for Neutral 47
Adjusting the Maximum Ground Speed 48
Adjusting the Tracking 50
Hydraulic System Maintenance 51
Hydraulic System Safety 51
Checking the Hydraulic System 51
Changing the Hydraulic Fluid And Filter 52
Cleaning 52
Cleaning Under the Mower 52
Disposing of Waste 52
Storage 53
Machine 53
Engine 53

Safety

This machine has been designed in accordance with CEN standard ANSI B71.4-2012 and ISO EN 5395:2013 when the proper CE Kits have been installed per the Declaration of Conformity.

General Safety

This product is capable of amputating hands and feet and of throwing objects. Always follow all safety instructions to avoid serious personal injury.

Using this product for purposes other than its intended use could prove dangerous to you and bystanders.

- Read and understand the contents of this *Operator's Manual* before starting the engine.
- Do not put your hands or feet near moving components of the machine.
- Do not operate the machine without all guards and other safety protective devices in place and working on the machine.
- Keep clear of any discharge opening. Keep bystanders and pets a safe distance away from the machine.
- Keep children out of the operating area. Never allow children to operate the machine.
- Stop the machine and shut off the engine before servicing, fueling, or unclogging the machine.
- Avoid sudden starts and stops, holes, dropoffs, and hidden hazards in the terrain.
- For braking, move the traction pedal to the neutral position or to the direction opposite the travel direction.

Improperly using or maintaining this machine can result in injury. To reduce the potential for injury, comply with these safety instructions and always pay attention to the safety-alert symbol, which means Caution, Warning, or Danger—personal safety instruction. Failure to comply with these instructions may result in personal injury or death.

You can find additional safety information where needed throughout this *Operator's Manual*.

Sound and Vibration Level Information

See the CE Kit Manual (Model 30240) for guaranteed sound powers, sound pressure levels, and vibration levels.

Slope Indicator

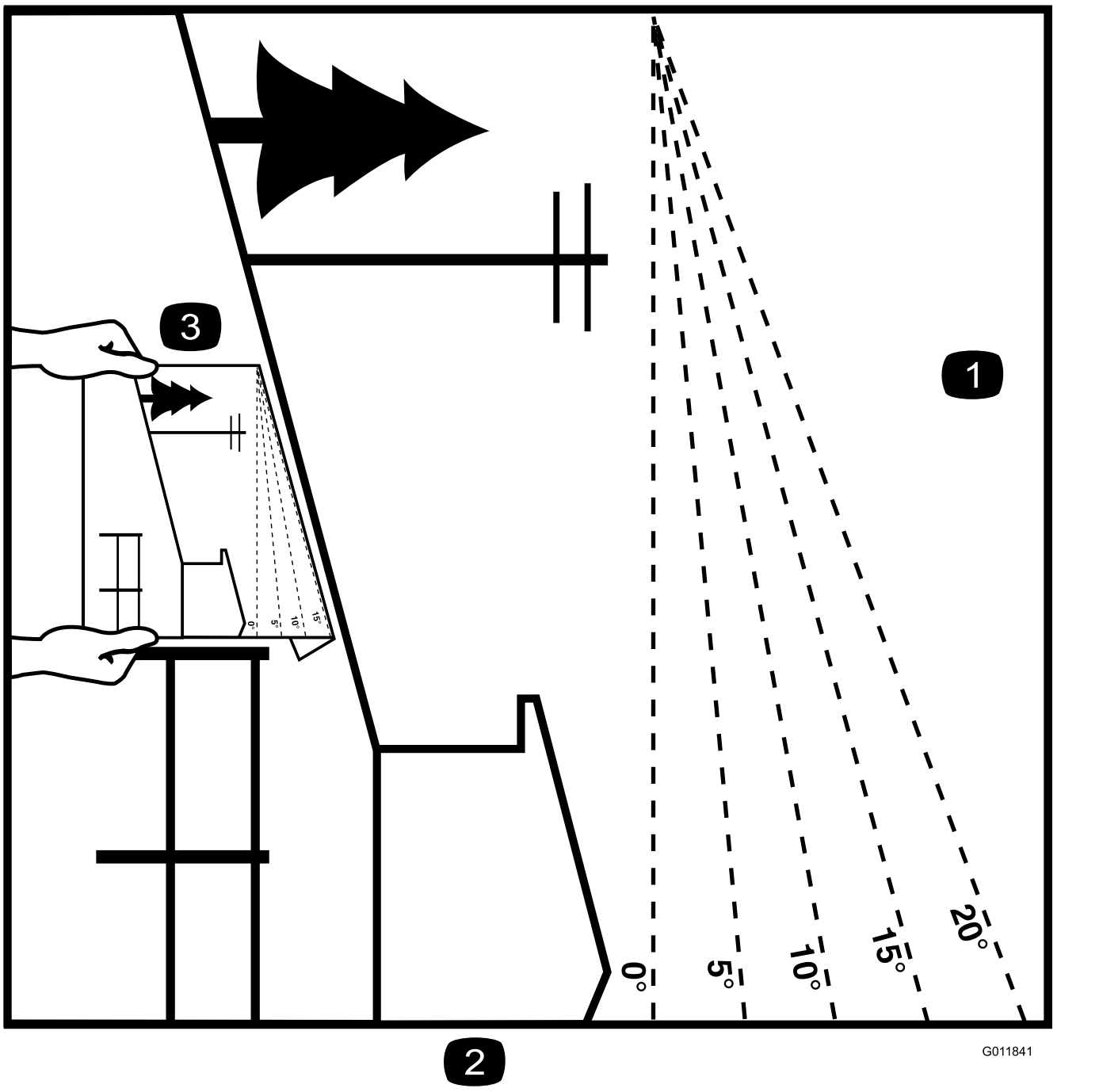

Figure 3

This page may be copied for personal use.

1. The maximum slope you can safely operate the machine on is noted in the table above. Use the slope chart to determine the degree of slope of hills before operating. **Do not operate this machine on a slope greater than what is rated for your machine.** Fold along the appropriate line to match the recommended slope.
2. Align this edge with a vertical surface, a tree, building, fence pole, etc.
3. Example of how to compare slope with folded edge.

Safety and Instructional Decals

Safety decals and instructions are easily visible to the operator and are located near any area of potential danger. Replace any decal that is damaged or lost.

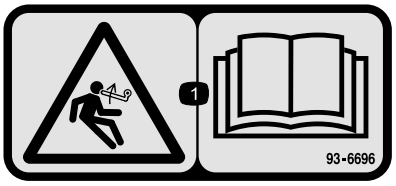

decal93-6696

93-6696

1. Stored energy hazard—read the *Operator's Manual*.



decal93-6697

93-6697

1. Read the *Operator's Manual*.
2. Add SAE 80w-90 (API GL-5) oil every 50 hours.



decal98-4387

98-4387

1. Warning—wear hearing protection.

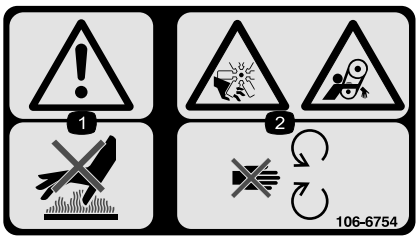

decal106-6754

106-6754

1. Warning—do not touch the hot surface.
2. Cutting/dismemberment hazard, fan and entanglement hazard, belt—stay away from moving parts.



decal106-6755

106-6755

1. Engine coolant under pressure.
2. Explosion hazard—read the *Operator's Manual.*
3. Warning—do not touch the hot surface.
4. Warning—read the *Operator's Manual.*

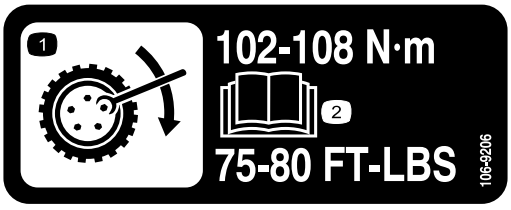

decal106-9206

106-9206

1. Wheel torque specifications
2. Read the *Operator's Manual*.

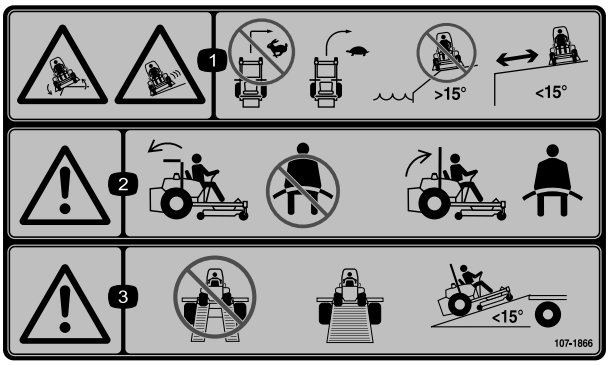

decal107-1866

107-1866

1. Tipping hazard and sliding or loss of control hazard, drop-offs—do not turn sharply while traveling fast, instead, slow down and turn gradually; do not operate the machine near drop-offs, slopes greater than 15 degrees, or water; keep a safe distance from drop-offs.
2. Warning—if the roll bar is lowered, do not wear the seat belt; if the roll bar is raised, wear the seat belt.
3. Warning—do not use split ramps; use a full ramps when transporting machine; only use ramps with inclines less than 15 degrees.

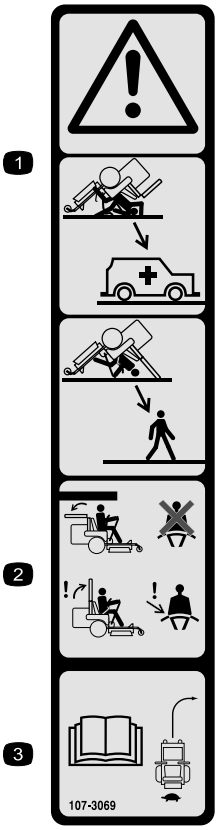

decal107-3069

107-3069

1. Warning–there is no rollover protection when the roll bar is down.
2. To avoid injury or death from a rollover accident, keep the roll bar in the raised and locked position and wear the seat belt. Lower the roll bar only when absolutely necessary; do not wear the seat belt when the roll bar is down.
3. Read the *Operator's Manual*; drive slowly and carefully.

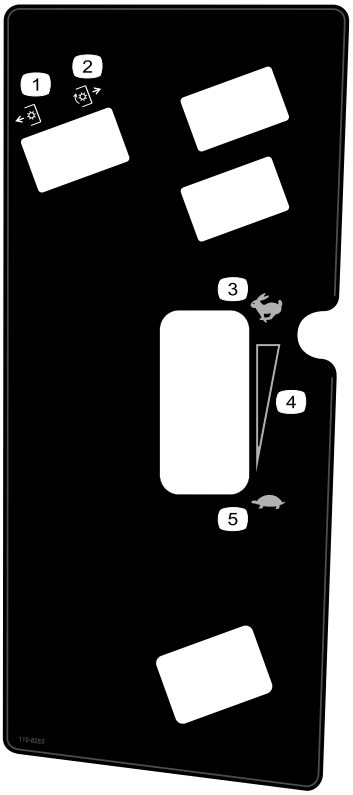

decal110-8253

110-8253

1. PTO–Off
2. PTO—On
3. Fast
4. Continuous-variable setting
5. Slow

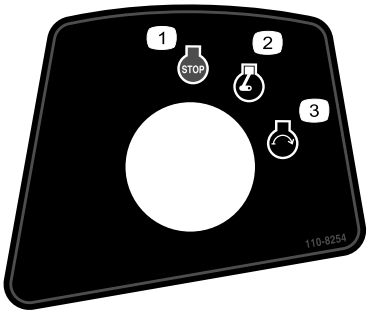

decal110-8254

110-8254

1. Engine–Stop
2. Engine—Run
3. Engine—Start

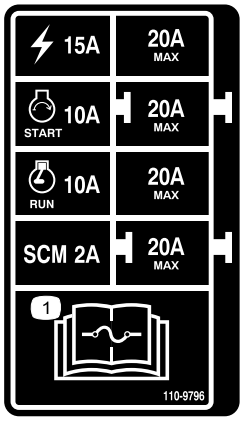

decal110-9796

110-9796

1. Read the *Operator's Manual* for information on fuses.

CALIFORNIA SPARK ARRESTER WARNING

Operation of this equipment may create sparks that can start fires around dry vegetation. A spark arrester may be required. The operator should contact local fire agencies for laws or regulations relating to fire prevention requirements. 117-2718

decal117-2718

117-2718

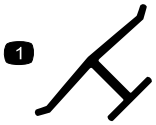

decaloemmarkt

Manufacturer's Mark

1. Indicates the blade is identified as a part from the original machine manufacturer.



decalbatterysymbols

Battery Symbols

Some or all of these symbols are on your battery

1. Explosion hazard
2. No fire, open flame, or smoking.
3. Caustic liquid/chemical burn hazard
4. Wear eye protection.
5. Read the *Operator's Manual.*
6. Keep bystanders a safe distance from the battery.
7. Wear eye protection; explosive gases can cause blindness and other injuries.
8. Battery acid can cause blindness or severe burns.
9. Flush eyes immediately with water and get medical help fast.
10. Contains lead; do not discard.

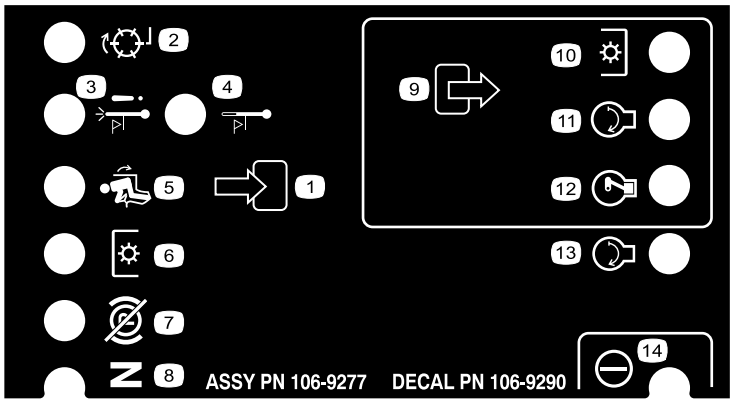

decal106-9290

106-9290

1. Inputs
2. Not active
3. High temperature shutdown
4. High temperature warning
5. In seat
6. Power takeoff (PTO)
7. Parking brake off
8. Neutral
9. Outputs
10. Power takeoff (PTO)
11. Start
12. Energize to run (ETR)
13. Start
14. Power

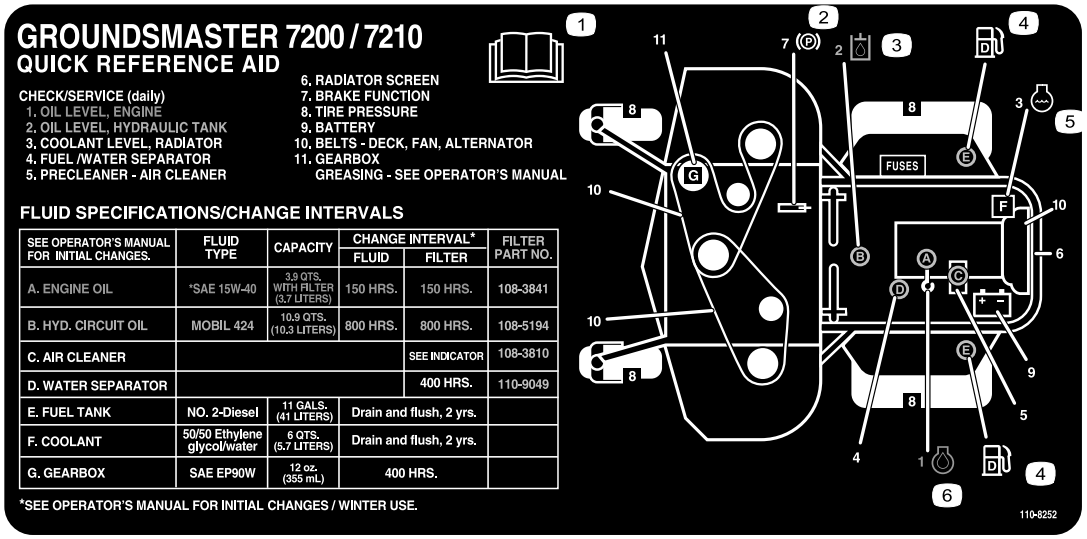

decal110-8252

110-8252

1. Read the *Operator's Manual.*
2. Parking brake
3. Hydraulic oil
4. Fuel
5. Engine coolant
6. Engine oil

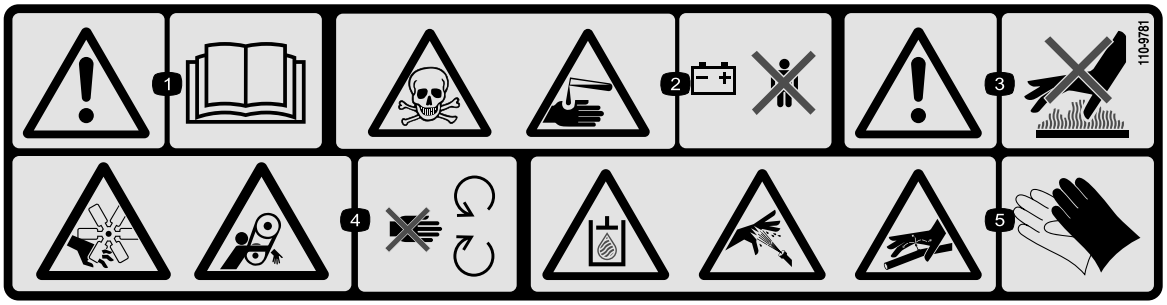

decal110-9781

110-9781

1. Warning—read the *Operator's Manual.*
2. Poison and caustic liquid/chemical burn hazard—keep children a safe distance from the battery.
3. Warning—do not touch the hot surface.
4. Cutting/dismemberment hazard, fan and entanglement hazard, belt—stay away from moving parts.
5. Hydraulic fluid in system under pressure, escaping hydraulic fluid penetrating skin hazard, broken hydraulic lines hazard—wear protective hand protection when handling hydraulic system components.

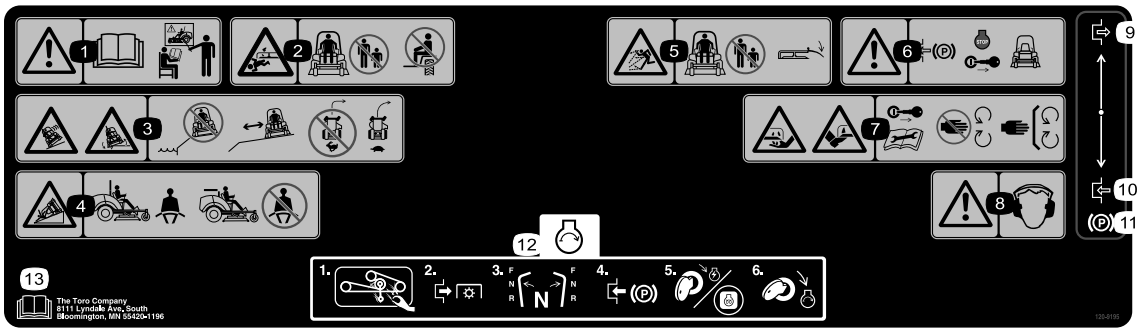

decal120-9195

120-9195

1. Warning—read the *Operator's Manual* before operating and do not operate this machine unless you are trained.
2. Crushing/dismemberment hazard of bystanders—do not carry passengers, keep bystanders a safe distance from the machine.
3. Tipping, drop-off hazard—do not operate near water drop-offs, stay a safe distance from drop-offs, slow machine before turning, do not turn at high speeds.
4. Wear a seat belt when a ROPS is in place; do not wear a seat belt when ROPS is lowered.
5. Thrown object hazard—keep bystanders a safe distance from the machine; keep all deflectors and shields in place.
6. Warning—engage the parking brake, stop the engine and remove the ignition key before leaving the machine.
7. Cutting hazard of hand or foot—remove the ignition key and read the instructions before servicing or performing maintenance; keep away from moving parts.
8. Warning—wear hearing protection.
9. Engage
10. Disengage
11. Parking brake
12. To start the engine: clear any debris from the attachment, disengage the PTO, move the motion-control levers to the Neutral position, engage the parking brake, turn the ignition to Run, and wait for the glow plug light to turn off, turn the ignition key to Start.
13. Read the *Operator's Manual.*

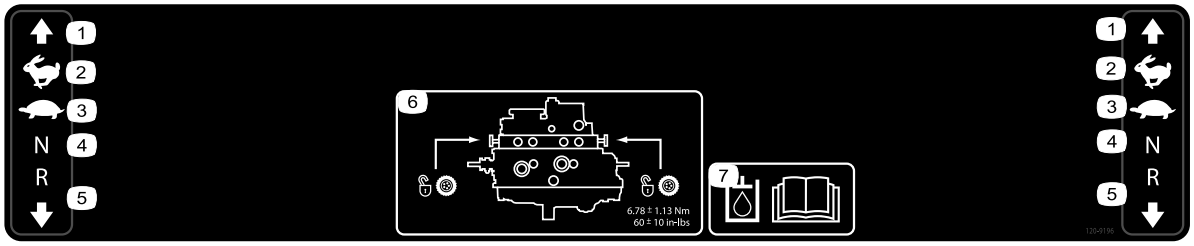

decal120-9196

120-9196

1. Forward
2. Fast
3. Slow
4. Neutral
5. Reverse
6. Tow valve location; torque the tow valves to 5.65 to 7.91 N·m (50 to 70 in-lb).
7. Read the *Operator's Manual* for more information on the hydraulic fluid.

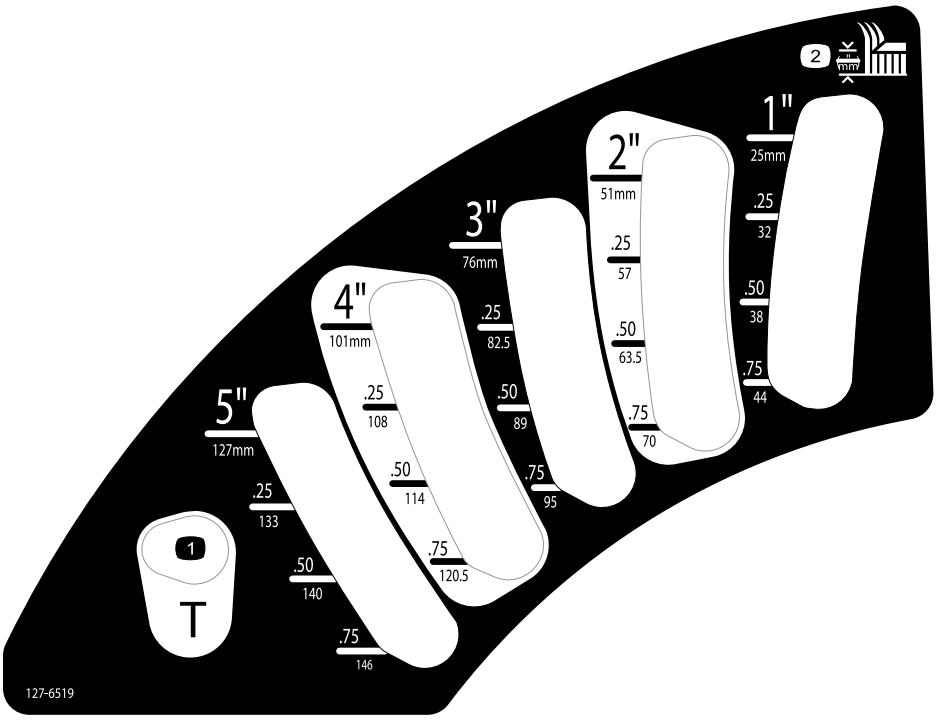

decal127-6519

127-6519

1. Transport position
2. Height of cut

Setup

Loose Parts

Use the chart below to verify that all parts have been shipped.

Procedure	Description	Qty.	Use
1	No parts required	–	Raise the ROPS.
2	Deck Installation Instructions	1	Install the mower deck.
3	No parts required	–	Adjust the left, front caster wheel.
4	No parts required	–	Check the tire pressure.
5	No parts required	–	Install weights.
6	No parts required	–	Check the hydraulic fluid, engine oil, and coolant levels.
7	Operator's Manual Engine owner's manual Parts Catalog Operator training material Engine warranty Declaration of Conformity Deck Installation Instructions	1 1 1 1 1 1 1	Read the manuals and view the training materials before operating the machine. Use the remaining parts for the installation of attachments.

1

Raising the Roll Bar

No Parts Required

Procedure

Raise the roll bar; refer to Raising the ROPS (page 20).

2

Installing the Mower Deck

Parts needed for this procedure:

1	Deck *Installation Instructions*

Procedure

Install the deck using the *Installation Instructions* for that deck.

3

Adjusting the Left, Front Caster Wheel

No Parts Required

Procedure

Adjust the left, front caster wheel to the outside position for 72-inch decks and to the inside position for 60-inch and 62-inch decks.

4

Checking the Tire Pressure

No Parts Required

Procedure

The tires are overinflated for shipping. Release some air to reduce the pressure. The correct air pressure is 103 kPa (15 psi) in the rear tires and 172 kPa (25 psi) in the caster wheels.

5

Installing Weights (for CE Compliance)

No Parts Required

Procedure

Machines with 183 cm (72 inch) decks installed and no other attachments do not need added weight to meet CE standards. However, you may need to purchase and install additional weight depending on the mower deck size/type and the attachments that you install on the machine. The following table lists the various attachment configurations and the additional front weight needed for each model:

Attachment Configuration	Weight Required with a 157.5 cm (62 inch) Base Deck (30457)	Weight Required with a 183 cm (72 inch) Base Deck (30353)	Weight Required with a 183 cm (72 inch) Side-discharge (30481)
Groundsmaster 7200/7210 Traction Unit with no Added Attachments	10 kg (22 lb)	0 kg (0 lb)	0 kg (0 lb)
Groundsmaster 7200/7210 Traction Unit and Hard Canopy	34 kg (75 lb)	9.5 kg (21 lb)	15 kg (33 lb)
Groundsmaster 7200/7210 Traction Unit, Hard Canopy, and Road Light Kit	32.2 kg (71 lb)	28.5 kg (63 lb)	10 kg (22 lb)
Groundsmaster 7200/7210 Traction Unit, Hard Canopy, Road Light Kit, and Jack Stand	18 kg (40 lb)	17 kg (37 lb)	10 kg (22 lb)
Groundsmaster 7200/7210 Traction Unit, Hard Canopy, and Jack Stand	14 kg (31 lb)	10 kg (22 lb)	10 kg (22 lb)
Groundsmaster 7200/7210 Traction Unit, Road Light Kit, and Jack Stand	0 kg (0 lb)	0 kg (0 lb)	0 kg (0 lb)
Groundsmaster 7200/7210 Traction Unit and Road Light Kit	11.3 kg (25 lb)	0 kg (0 lb)	0 kg (0 lb)
Groundsmaster 7200/7210 Traction Unit and Jack Stand	0 kg (0 lb)	0 kg (0 lb)	0 kg (0 lb)

Contact your Authorized Toro Distributor to obtain the appropriate kits and weights for your machine.

6

Checking the Fluid Levels

No Parts Required

Procedure

1. Check the hydraulic fluid level before starting the engine; refer to Hydraulic System Maintenance (page 51).
2. Check the engine oil level before and after starting the engine; refer to Checking the Engine-Oil Level (page 37).
3. Check the cooling system before starting the engine; refer to Checking the Cooling System (page 43).

7

Reading the Manuals and Viewing the Training Materials

Parts needed for this procedure:

1	*Operator's Manual*
1	Engine owner's manual
1	*Parts Catalog*
1	Operator training material
1	Engine warranty
1	*Declaration of Conformity*
1	Deck *Installation Instructions*

Procedure

1. Read the manuals.
2. View the operator training materials.

Product Overview

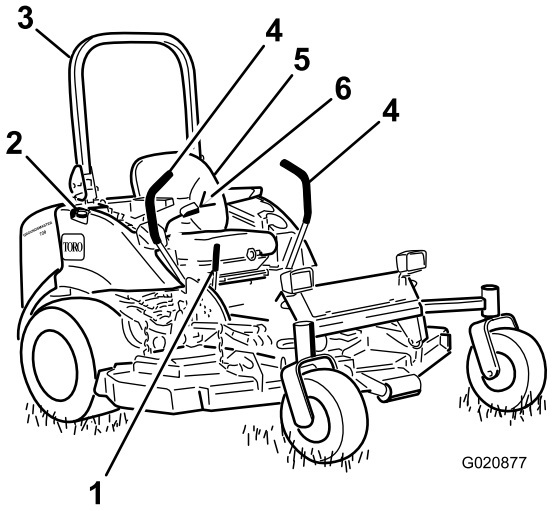

g020877

Figure 4

1. Parking-brake lever
2. Fuel cap (both sides)
3. Roll bar
4. Motion-control lever
5. Seat
6. Seat belt

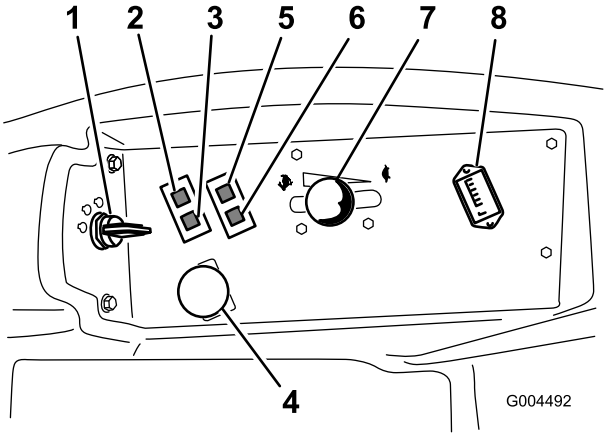

g004492

Figure 5

1. Ignition switch
2. Engine-coolant-temperature warning light
3. Glow-plug light
4. Power-takeoff (PTO) switch
5. Oil-pressure warning light
6. Charge-indicator light
7. Throttle lever
8. Hour meter

Controls

Become familiar with all the controls before you start the engine and operate the machine (Figure 4 and Figure 5).

Motion-Control Levers

The motion-control levers control the forward and rearward motions as well as the turning of the machine. Refer to Driving the Machine (page 26).

Parking-Brake Lever

Whenever you shut off the engine, engage the parking brake to prevent accidental movement of the machine. To engage the parking brake, pull the parking-brake lever rearward and up (Figure 6). To release the parking brake, push the parking-brake lever forward and down.

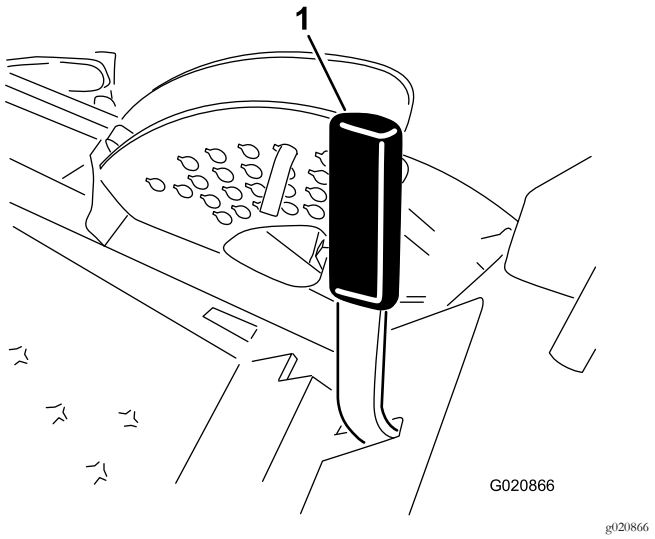

Figure 6

1. Parking-brake lever

Ignition Switch

The ignition switch has 3 positions: OFF, ON/PREHEAT, and START.

Throttle Lever

The throttle lever controls the speed of the engine, the speed of the blades, and, in conjunction with motion-control levers, the ground speed of the machine. Moving the throttle lever forward toward the FAST position increases the engine speed. Moving it rearward toward the SLOW position decreases the engine speed. Always run the machine with the throttle in the FAST position when cutting grass.

Power-Takeoff (PTO) Switch

The power-takeoff (PTO) switch starts and stops the mower blades.

Hour Meter

The hour meter records the number of hours that you operate the machine with the key switch in the RUN position. Use these times for scheduling regular maintenance.

Glow-Plug Light (Orange Light)

The glow-plug indicator light illuminates when you turn the ignition switch to the ON position. It remains lit for 6 seconds. When the light turns off, the engine is ready to start.

Engine-Coolant-Temperature Warning Light

This light illuminates and the cutting blades stop if the engine-coolant temperature is high. If you do not stop the machine and the coolant temperature rises another 11° C (20° F), the engine stops.

Important: If the mower deck shuts down and the temperature warning light is on, push the PTO knob down, drive to a safe, flat area, move the throttle lever to the SLOW position, move the motion-control levers into the NEUTRAL-LOCK position, and engage the parking brake. Idle the engine for several minutes while it cools to a safe level. Stop the engine and check the cooling system; refer to Checking the Cooling System (page 43).

Charge-Indicator Light

The charge-indicator light illuminates when the system charging circuit malfunctions.

Oil-Pressure-Warning Light

The oil-pressure warning light illuminates when the oil pressure in engine drops below a safe level. If the oil pressure is low, shut off the engine and determine the cause. Repair the damage before starting the engine again.

Fuel Gauge

The fuel gauge (Figure 7) indicates the quantity of fuel remaining in the fuel tanks.

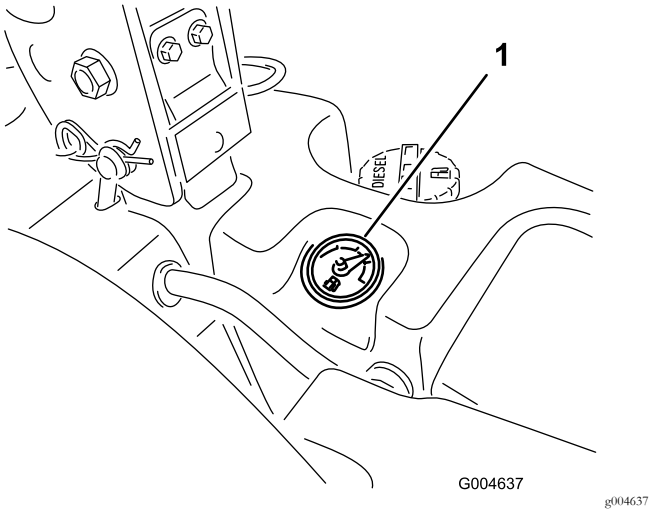

Figure 7

1. Fuel gauge

Specifications

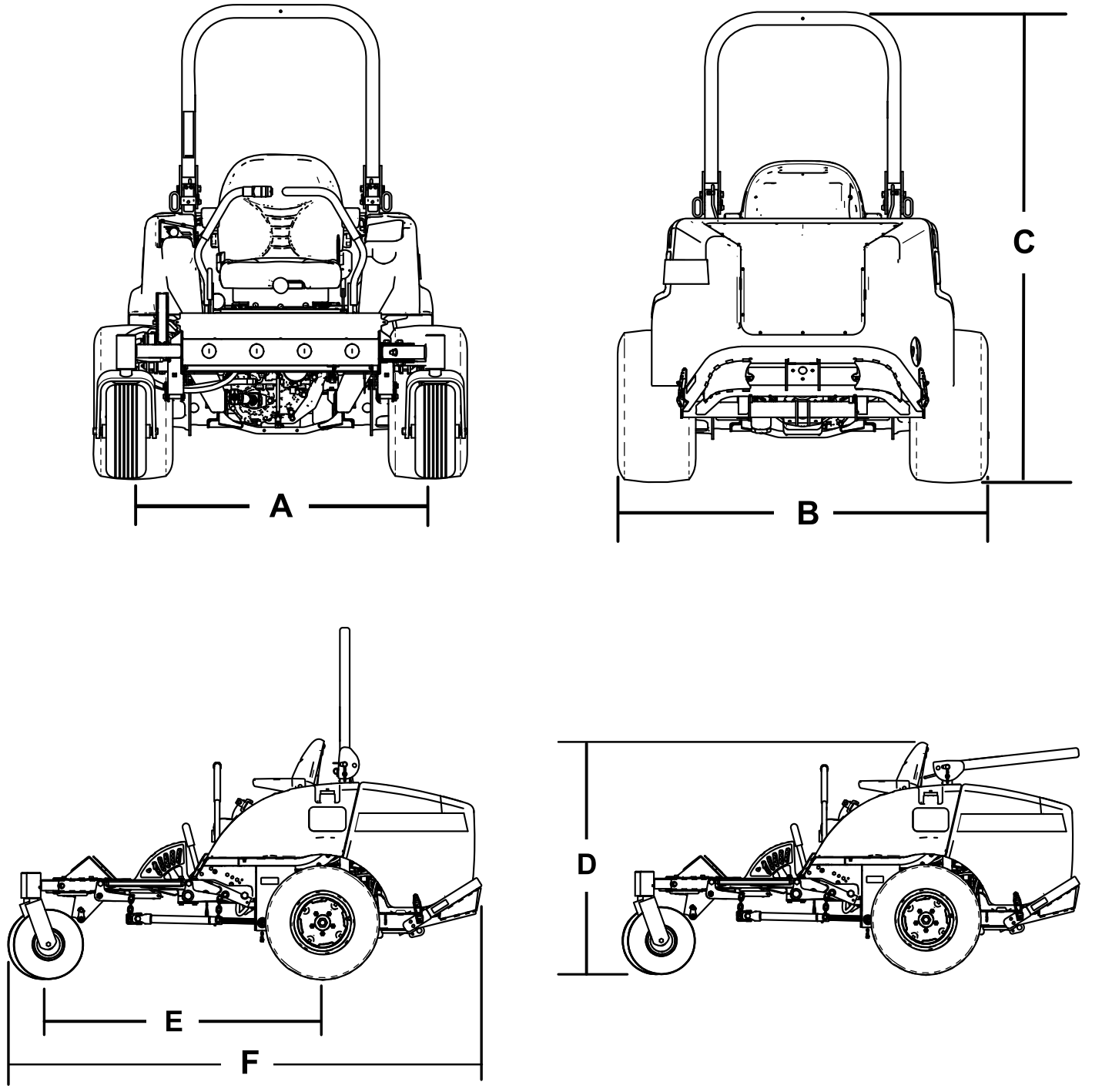

Figure 8

Description	Figure 8 reference	Dimension or Weight
Height with roll bar up	C	183 cm (72 inches)
Height with roll bar down	D	125 cm (49 inches)
Overall length	F	246 cm (97 inches)
Overall width	B	145 cm (57 inches)
Wheel base	E	145 cm (57-1/4 inches)
Wheel tread (tire center to center) rear	A	114 cm (45 inches)

Ground clearance		15 cm (6 inches)
Weight, with 72 inch SDD (30354 or 30481)		934 kg (2,060 lb)
Weight, with 60 inch SDD (30456)		900 kg (1,985 lb)
Weight, with 72 inch Base Deck (30353)		876 kg (1,932 lb)
Weight, with 62 inch Base Deck (30457)		855 kg (1,884 lb)

Note: Specifications and design are subject to change without notice.

Attachments/Accessories

A selection of Toro approved attachments and accessories is available for use with the machine to enhance and expand its capabilities. Contact your Authorized Service Dealer or Distributor or go to www.Toro.com for a list of all approved attachments and accessories.

Operation

Note: Determine the left and right sides of the machine from the normal operating position.

Before Operation

Before Operation Safety

General Safety

- Never allow children or untrained people to operate or service the machine. Local regulations may restrict the age of the operator. The owner is responsible for training all operators and mechanics.
- Become familiar with the safe operation of the equipment, operator controls, and safety signs.
- Know how to stop the machine and engine quickly.
- Check that operator-presence controls, safety switches, and shields are attached and functioning properly. Do not operate the machine unless they are functioning properly.
- Before mowing, always inspect the machine to ensure that the blades, blade bolts, and cutting assemblies are in good working condition. Replace worn or damaged blades and bolts in sets to preserve balance.
- Inspect the area where you will use the machine and remove all objects that the machine could throw.

Fuel Safety

- Use extreme care in handling fuel. It is flammable and its vapors are explosive.
- Extinguish all cigarettes, cigars, pipes, and other sources of ignition.
- Use only an approved fuel container.
- Never remove the fuel cap or fill the fuel tank while the engine is running or hot.
- Never refuel the machine in an enclosed space.
- Never store the machine or fuel container where there is an open flame, spark, or pilot light, such as on a water heater or other appliance.
- If you spill fuel, do not attempt to start the engine; avoid creating any source of ignition until the fuel vapors have dissipated.

Adding Fuel

Recommended Fuel

Use only clean, fresh diesel fuel with ultra low (<15 ppm) sulfur content meeting ASTM D 975 or EN 590 specifications. The minimum cetane rating should be 40. Purchase fuel in quantities that can be used within 180 days to ensure fuel freshness.

Important: Use of non-ultra low sulfur fuel causes damage to the engine emission system.

Fuel tank capacity: 43.5 L (11.5 US gallons)

Use summer-grade diesel fuel (No. 2-D) at temperatures above -7°C (20°F) and winter grade (No. 1-D or No. 1-D/2-D blend) below that temperature. Use of winter-grade fuel at lower temperatures provides lower flash point and cold-flow characteristics, which eases starting and reduces fuel filter plugging.

Use of summer-grade fuel above -7°C (20°F) contributes toward longer fuel-pump life and increased power compared to winter-grade fuel.

Important: Do not use kerosene or gasoline instead of diesel fuel. Failure to observe this caution damages the engine.

Biodiesel Ready

This machine can also use a biodiesel blended fuel of up to B20 (20% biodiesel, 80% petrodiesel). The petrodiesel portion must be ultra low sulfur. Observe the following precautions:

- The biodiesel portion of the fuel must meet specification ASTM D6751 or EN14214.
- The blended fuel composition should meet ASTM D975 or EN590.
- Painted surfaces may be damaged by biodiesel blends.
- Monitor seals, hoses, gaskets in contact with fuel as they may be degraded over time.
- Fuel filter plugging may be expected for a time after converting to biodiesel blended fuel.
- Contact your distributor if you wish more information on biodiesel.

Filling the Fuel Tank

Important: The fuel tanks are connected, but the fuel does not transfer quickly from one tank to the other. It is important when filling that you park on a level surface. If you park on a hill, you may inadvertently overfill the tanks.

Important: Do not overfill the fuel tanks.

Important: Do not open the fuel tanks when parked on a hill. The fuel could spill out.

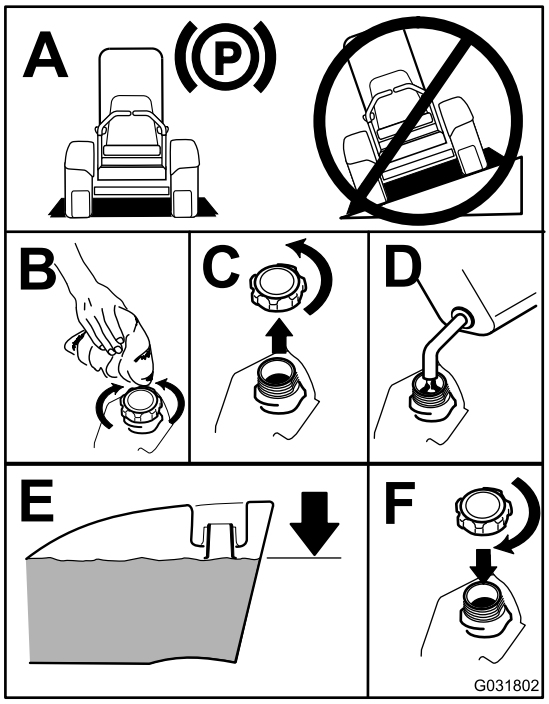

g031802

Figure 9

Note: If possible, fill the fuel tanks after each use. This minimizes buildup of condensation inside the fuel tank.

Checking the Engine-Oil

Before you start the engine and use the machine, check the oil level in the engine crankcase; refer to Checking the Engine-Oil Level (page 37).

Checking the Cooling System

Before you start the engine and use the machine, check the cooling system; refer to Checking the Cooling System (page 43).

Checking the Hydraulic System

Before you start the engine and use the machine, check the hydraulic system; refer to Checking the Hydraulic System (page 51).

Using the Rollover Protection System (ROPS)

⚠ WARNING

To avoid injury or death from rollover: keep the roll bar in the raised locked position and use the seat belt.

Ensure that the rear part of the seat is secured with the seat latch.

⚠ WARNING

There is no rollover protection when the roll bar is in the down position.

- **Lower the roll bar only when absolutely necessary.**
- **Do not wear the seat belt when the roll bar is in the down position.**
- **Drive slowly and carefully.**
- **Raise the roll bar as soon as clearance permits.**
- **Check carefully for overhead clearances (i.e. branches, doorways, electrical wires) before driving under any objects and do not contact them.**

Raising the ROPS

Raise the ROPS as shown in Figure 11.

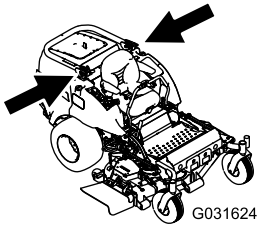

g031624

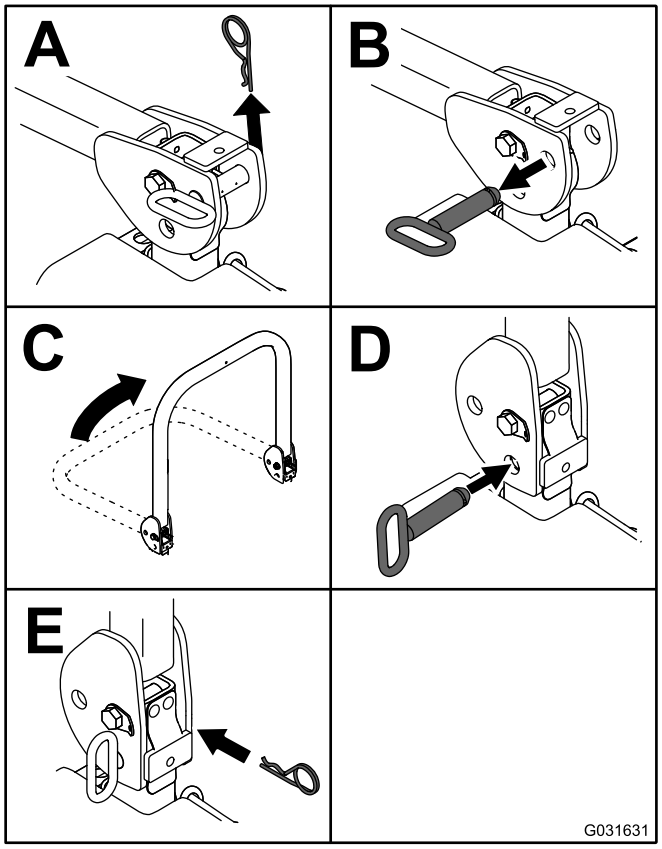

g031631

Figure 10

Important: Always use the seat belt when the roll bar is in the raised and locked position. Do not use the seat belt when the roll bar is in the lowered position.

Lowering the ROPS

Lower the ROPS as shown in Figure 10.

Note: Push the bar forward to relieve pressure on the pins.

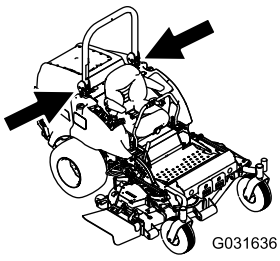

g031636

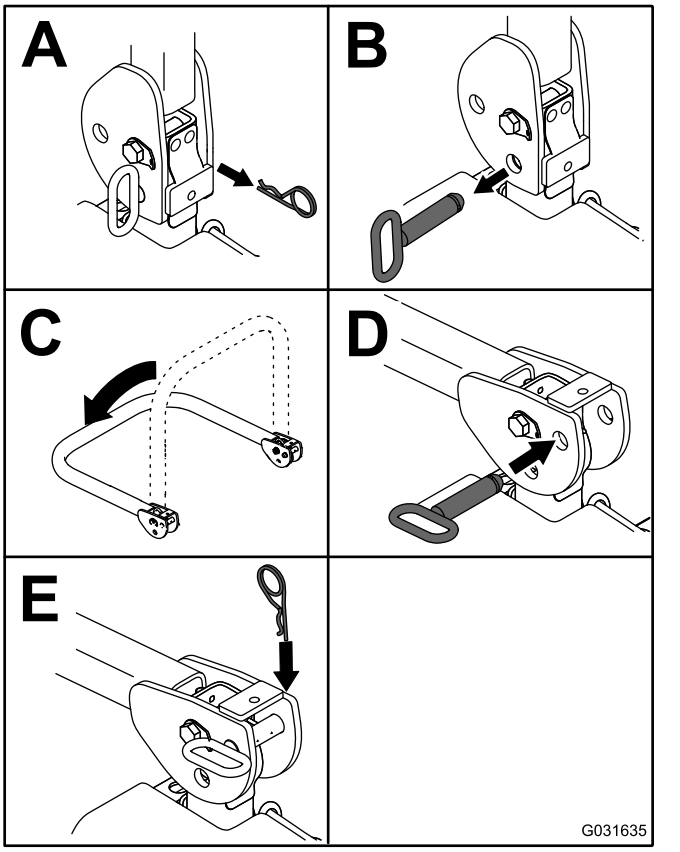

g031635

Figure 11

Note: Secure the ROPS so that it does not damage the hood.

Think Safety First

Please read all safety instructions and symbols in the safety section. Knowing this information could help you or bystanders avoid injury.

⚠ DANGER

Operating the machine on wet grass or steep slopes can cause sliding and loss of control.

- **Reduce speed and use extreme caution on slopes.**
- **Do not operate the machine near water.**

⚠ DANGER

Wheels dropping over edges can cause rollovers, which may result in serious injury, death, or drowning.

Do not operate the machine near drop-offs.

⚠ DANGER

Operating the machine while the roll bar is down may lead to serious injury or death in the event of a rollover.

Always keep the roll bar in the fully raised and locked position and use the seat belt.

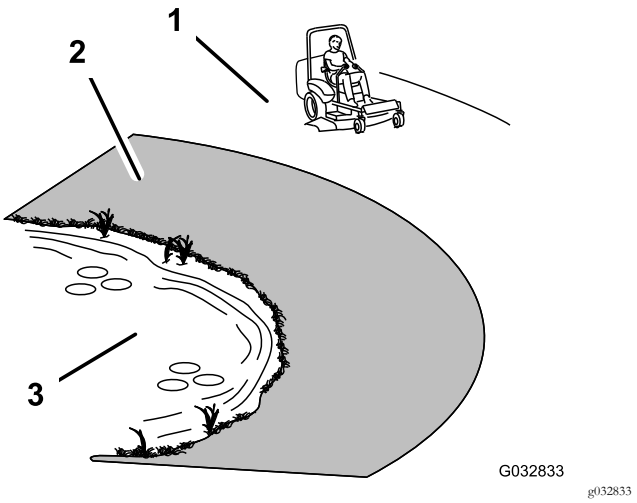

g032833

Figure 12

1. Safe zone
2. Use a walk-behind mower and/or hand trimmer near drop-offs and water.
3. Water

⚠ CAUTION

This machine produces sound levels in excess of 85 dBA at the operator's ear and can cause hearing loss through extended periods of exposure.

Wear hearing protection when operating this machine.

Use protective equipment for your eyes, ears, hands, feet, and head.

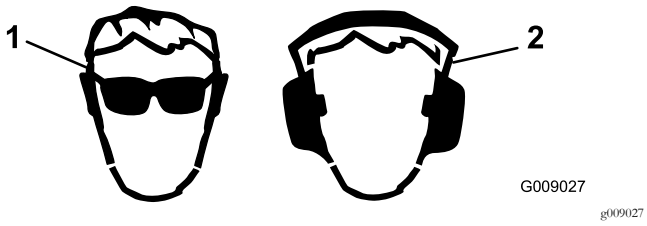

Figure 13

1. Wear eye protection.
2. Wear hearing protection.

Using the Safety-Interlock System

⚠ CAUTION

If the safety-interlock switches are disconnected or damaged, the machine could operate unexpectedly, causing personal injury.

- **Do not tamper with the interlock switches.**
- **Check the operation of the interlock switches daily and replace any damaged switches before operating the machine.**

Understanding the Safety-Interlock System

The safety-interlock system prevents the engine from starting unless:

- You are sitting on the seat or the parking brake is engaged.
- The power takeoff (PTO) is disengaged.
- The motion-control levers are in the NEUTRAL-LOCK position.
- The engine temperature is below the maximum operating temperature.

The safety-interlock system also stops the engine when you move the traction controls from the NEUTRAL-LOCK position with the parking brake engaged. If you rise from the seat when the PTO is engaged, there is a 1-second delay and then the engine stops.

Testing the Safety-Interlock System

Service Interval: Before each use or daily

Test the safety-interlock system before you use the machine each time. If the safety system does not operate as described below, have an Authorized Service Dealer repair the safety system immediately.

1. Sit on the seat, engage the parking brake, and move the PTO to the ON position. Try starting the engine; the engine should not crank.
2. Sit on the seat, engage the parking brake, and move the PTO to the OFF position. Move either motion-control lever out of the NEUTRAL-LOCK position. Try starting the engine; the engine should not crank. Repeat for other motion-control lever.
3. Sit on the seat, engage the parking brake, move the PTO switch to the OFF position, and move the motion-control levers to the NEUTRAL-LOCK position. Start the engine. While the engine is running, release the parking brake, engage the PTO, and rise slightly from the seat; the engine should stop within 2 seconds.
4. Without an operator on the seat, engage the parking brake, move the PTO switch to the OFF position, and move the motion-control levers to the NEUTRAL-LOCK position. Start the engine. While the engine is running, center either motion control; the engine should stop within 2 seconds. Repeat for the other motion-control lever.
5. Without an operator on the seat, disengage the parking brake, move the PTO switch to the OFF position, and move the motion-control levers to the NEUTRAL-LOCK position. Try starting the engine; the engine should not crank.

Using the SCM to Diagnose System Problems

The machine is equipped with a standard control module (SCM) monitoring system that tracks the function of various key systems. The SCM is located under the right control panel. Access it through the side panel cover (Figure 14). To open the side panel cover, release the 2 latches and pull out on it.

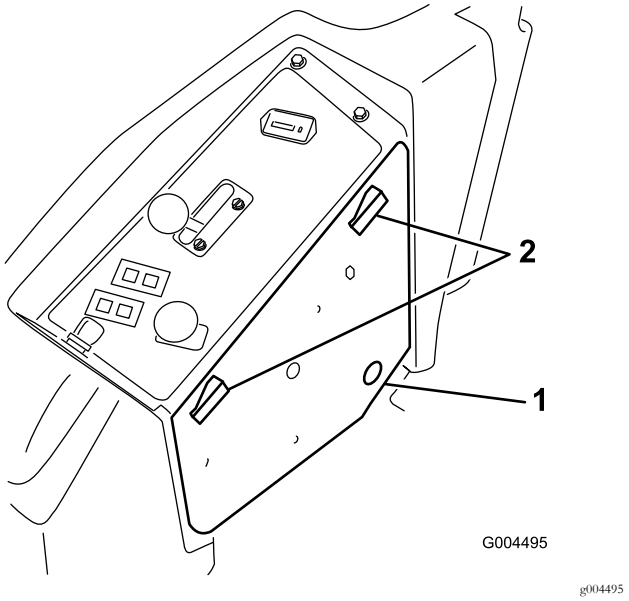

Figure 14

1. Side panel cover
2. Latches

On the face of the SCM are 11 LEDs that illuminate to indicate various system conditions. You can use 7 of these lights for system diagnosis. Refer to Figure 15 for a description of what each light means. For details on using the

rest of the SCM functions, refer to the *Service Manual*, available through your Authorized Toro Distributor.

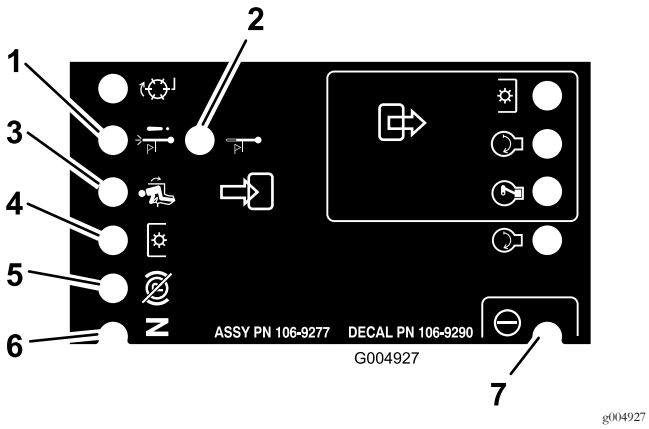

Figure 15

1. High temperature shutdown—the engine temperature has exceeded safe levels and the engine has been shut down. Check the cooling system.
2. High temperature warning—the engine temperature is approaching unsafe levels and the mower deck has been shut down. Check the cooling system.
3. Operator is in the seat.
4. The PTO is on.
5. The parking brake is not engaged.
6. Controls are in neutral.
7. The SCM is receiving power and is operational.

Positioning the Seat

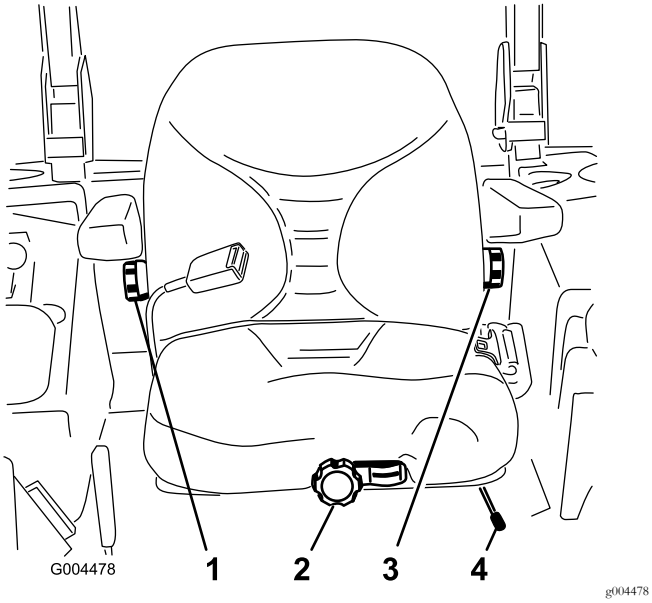

Figure 16

1. Back-rest knob
2. Seat-suspension knob
3. Lumbar-support-adjustment knob
4. Seat-position-adjustment lever

Changing the Seat Position

You can move the seat forward and backward. Position the seat where you have the best control of the machine and are most comfortable.

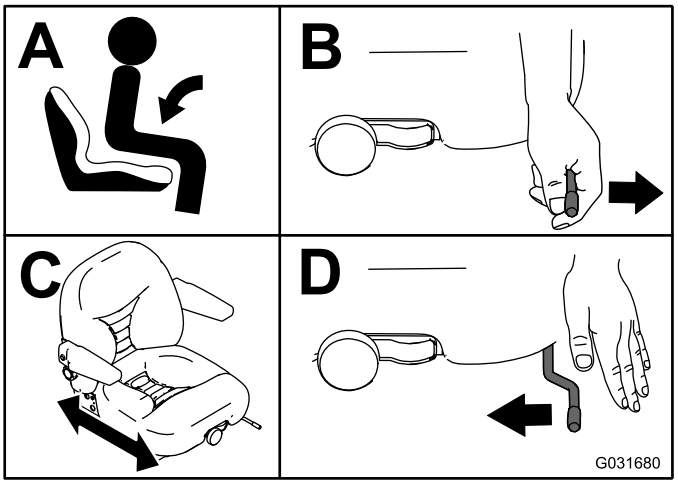

Figure 17

Changing the Seat Suspension

You can adjust the seat for a smooth and comfortable ride. Position the seat where you are most comfortable.

Without sitting on the seat, turn the knob in front either direction (Figure 16).

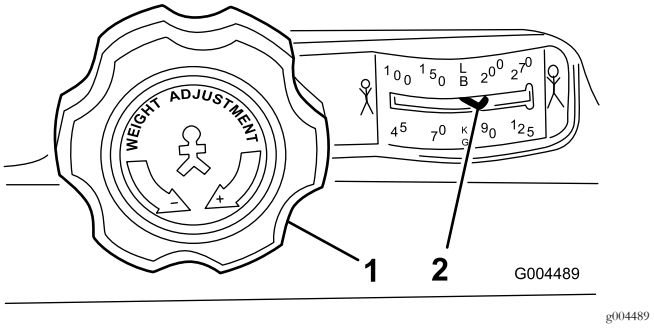

Figure 18

1. Seat-suspension knob
2. Operator-weight setting

Changing the Back Position

You can adjust the back of the seat for a comfortable ride. Position the back of the seat where you are most comfortable.

To adjust it, turn the knob, under the right arm rest, in either direction (Figure 16).

Changing the Lumbar Support

You can adjust the lumbar support for your lower back.

To adjust it, turn the knob, under the left arm rest, in either direction (Figure 16).

During Operation

During Operation Safety

General Safety

- The owner/operator can prevent and is responsible for accidents that may cause personal injury or property damage.
- Wear appropriate clothing, including eye protection; slip-resistant, substantial foot protection; and hearing protection. Tie back long hair and do not wear jewelry.
- Do not operate the machine while ill, tired, or under the influence of alcohol or drugs.
- Never carry passengers on the machine and keep bystanders and pets away from the machine during operation.
- Operate the machine only in good visibility to avoid holes or hidden hazards.
- Avoid mowing on wet grass. Reduced traction could cause the machine to slide.
- Before you start the engine, ensure that all drives are in neutral, the parking brake is engaged, and you are in the operating position.
- Keep your hands and feet away from the cutting units. Keep clear of the discharge opening at all times.
- Look behind and down before backing up to be sure of a clear path.
- Use care when approaching blind corners, shrubs, trees, or other objects that may obscure your vision.
- Do not mow near drop-offs, ditches, or embankments. The machine could suddenly roll over if a wheel goes over the edge or if the edge gives way.
- Stop the blades whenever you are not mowing.
- Stop the machine and inspect the blades after striking an object or if there is an abnormal vibration in the machine. Make all necessary repairs before resuming operation.
- Slow down and use caution when making turns and crossing roads and sidewalks with the machine. Always yield the right-of-way.
- Disengage the drive to the cutting unit and shut off the engine before adjusting the height of cut (unless you can adjust it from the operating position).
- Never run an engine in an area where exhaust gasses are enclosed.
- Never leave a running machine unattended.
- Before leaving the operating position (including to empty the catchers or to unclog the chute), do the following:
  - Park the machine on level ground.
  - Disengage the power take-off and lower the attachments.
  - Engage the parking brake.
  - Shut off the engine and remove the key.
  - Wait for all moving parts to stop.
- Do not operate the machine when there is the risk of lightning.
- Do not use the machine as a towing vehicle.
- Use accessories, attachments, and replacement parts approved by The Toro® Company only.

Rollover Protection System (ROPS) Safety

- **Do not** remove the ROPS from the machine.
- Ensure that the seat belt is attached and that you can release it quickly in an emergency.
- Check carefully for overhead obstructions and do not contact them.
- Keep the ROPS in safe operating condition by thoroughly inspecting it periodically for damage and keeping all the mounting fasteners tight.
- Replace a damaged ROPS. Do not repair or alter it.

Machines with a Foldable Roll Bar

- Always use the seat belt with the roll bar in the raised position.
- The ROPS is an integral safety device. Keep a folding roll bar in the raised and locked position, and use the seat belt when operating the machine with the roll bar in the raised position.
- Lower a folding roll bar temporarily only when necessary. Do not wear the seat belt when the roll bar is folded down.
- Be aware that there is no rollover protection when a folded roll bar is in the down position.
- Check the area that you will be mowing and never fold down a folding roll bar in areas where there are slopes, drop-offs, or water.

Slope Safety

- Slow down the machine and use extra care on hillsides. Travel up and down on hillsides. Turf conditions can affect the stability of the machine.
- Avoid turning the machine on slopes. If you must turn the machine, turn it slowly and gradually downhill, if possible.
- Do not turn the machine sharply. Use care when reversing the machine.
- Use extra care while operating the machine with attachments; they can affect the stability of the machine.

Operating the Parking Brake

Always engage the parking brake when you stop the machine or leave it unattended.

Engaging the Parking Brake

⚠ WARNING

The parking brake may not hold the machine parked on a slope and could cause personal injury or property damage.

Do not park the machine on slopes unless the wheels are chocked or blocked.

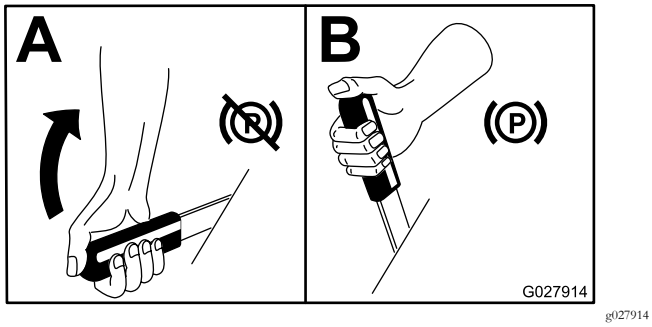

g027914

Figure 19

Releasing the Parking Brake

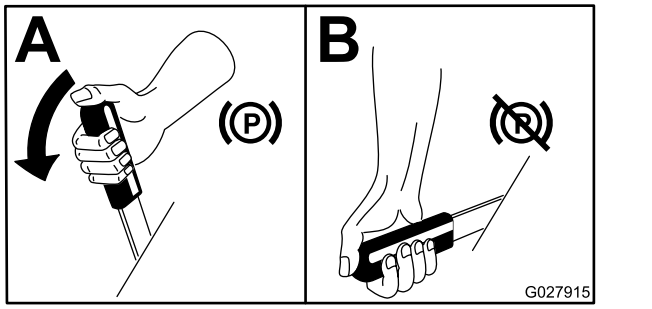

g027915

Figure 20

Starting and Shutting Off the Engine

Starting the Engine

Note: The glow plug light illuminates for 6 seconds when you turn the ignition key to the RUN position. Turn the ignition to the START position after the light goes out.

Important: Use starting cycles of no more than 15 seconds per minute to avoid overheating the starter motor.

Important: Operate the machine with the throttle lever in the SLOW position in both the forward and reverse directions for 1 to 2 minutes after changing the engine oil, overhauling either the engine, transmission, or wheel motor, and when you start the engine for the first time. Operate the lift lever and PTO lever to ensure that they operate properly. Shut the engine off, check fluid levels, and check for oil leaks, loose parts, and any other noticeable malfunctions.

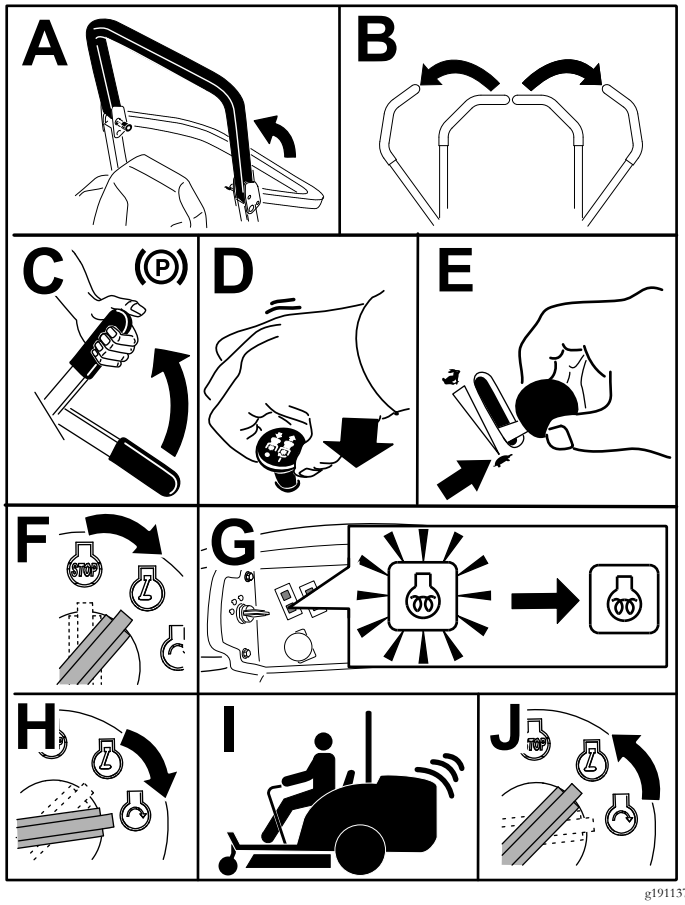

g191137

Figure 21

Note: Leave the throttle midway between the SLOW and FAST positions until the engine and hydraulic system warm up.

Shutting Off the Engine

⚠ CAUTION

Children or bystanders may be injured if they attempt to move or operate the tractor while it is unattended.

Always remove the ignition key and engage the parking brake when leaving the machine unattended, even if just for a few minutes.

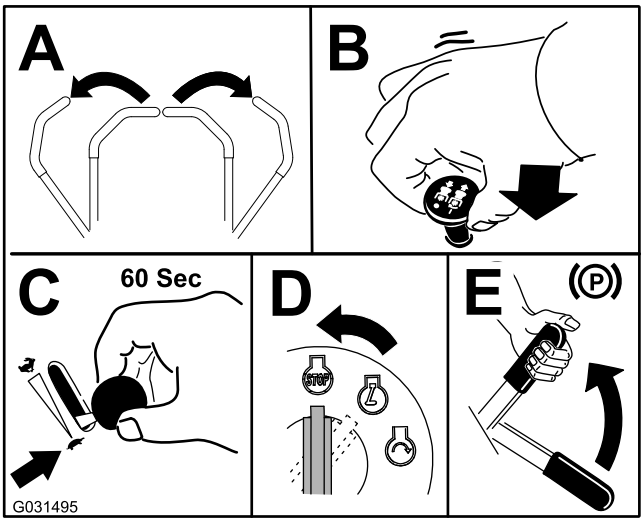

g031495

Figure 22

Driving the Machine

The throttle control regulates the engine speed as measured in rpm (revolutions per minute). Place the throttle control in the FAST position for best performance. Always operate in the FAST throttle position when running powered attachments.

⚠ CAUTION

The machine can turn very rapidly. You may lose control of it and cause personal injury or damage the machine.

- **Use caution when making turns.**
- **Slow the machine down before making sharp turns.**

1. Release the parking brake.

   Note: The engine shuts off if you move the motion-control levers out of the NEUTRAL-LOCK position with the parking brake engaged.

2. Move the levers to the center, unlocked position.
3. Drive the machine as follows:
   - To move straight forward, slowly push the motion-control levers forward (Figure 23).
   - To move straight rearward, slowly pull the motion-control levers rearward (Figure 23).
   - To turn, slow the machine by pulling back on both levers and then push forward on the lever on the opposite side from which you want to turn (Figure 23).
   - To stop, pull the motion-control levers to the NEUTRAL position.

Note: The farther you move the motion-control levers in either direction, the faster the machine moves in that direction.

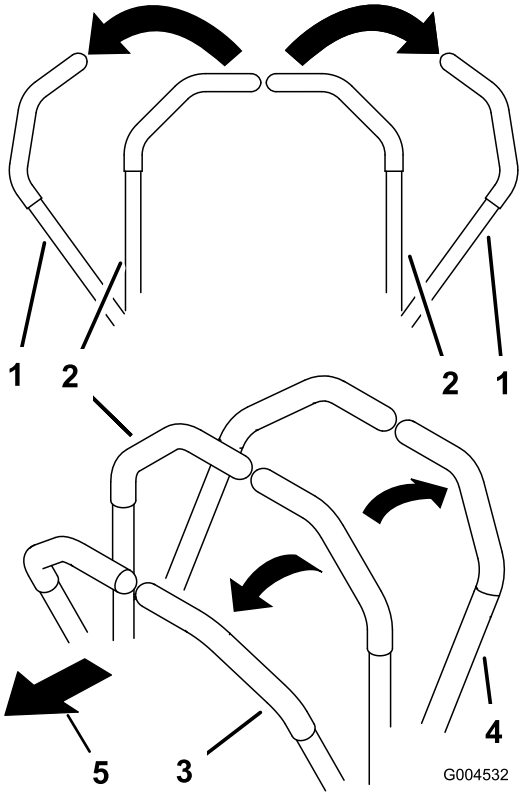

g004532

Figure 23

1. Motion-control lever—NEUTRAL-LOCK position
2. Center, unlocked position
3. Forward
4. Backward

Operating the Mower

Using the Deck-Lift Switch

The deck-lift switch raises and lowers the mower deck (Figure 24). The engine must be running for you to use this lever.

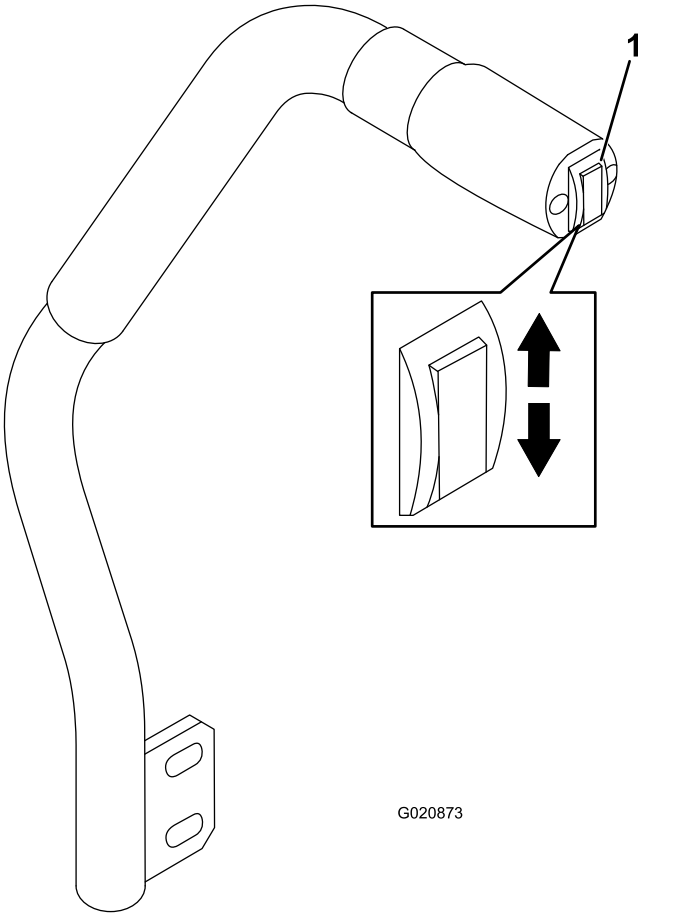

Figure 24

1. Deck-lift switch

- To lower the mower deck, push the deck-lift switch down (Figure 24).

  Important: When you lower the mower deck, it sets in a float/idle position.

- To raise the mover deck, push the deck-lift switch up (Figure 24).

Important: Do not continue to hold the switch up or down after the mower has fully raised or lowered. Doing so damages the hydraulic system.

Engaging the Power Takeoff (PTO)

The power-takeoff (PTO) switch starts and stops the mower blades and some powered attachments.

Note: If the engine is cold, allow the engine to warm up 5 to 10 minutes before engaging the PTO.

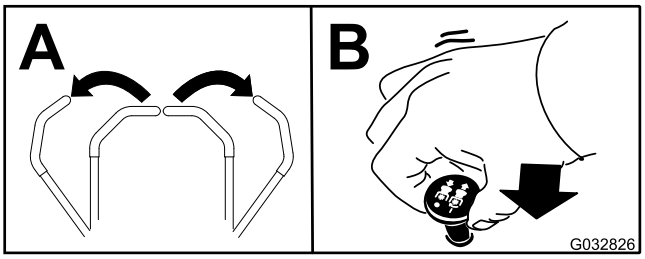

Figure 25

Disengaging the PTO

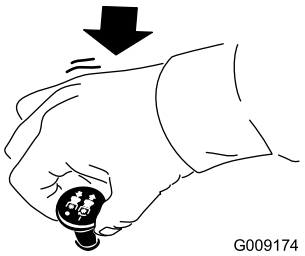

Figure 26

Adjusting the Height of Cut

You can adjust the height of cut from 2.5 to 15.8 cm (1 to 6 inches) in 6 mm (1/4 inch) increments by relocating the stop pin into different hole locations.

1. With the engine running, push the deck-lift switch up until the mower deck is fully raised and **release the switch immediately** (Figure 24).
2. Rotate the stop pin until the roll pin in it lines up with the slots in the holes in the height-of-cut bracket and remove it (Figure 27).
3. Select a hole in the height-of-cut bracket corresponding to the height of cut desired, insert the pin, and rotate it down to lock it in place (Figure 27).

   Note: There are 4 rows of hole positions (Figure 27). The top row gives you the height of cut listed above the pin. The second row down gives you the height listed plus 6 mm (1/4 inch). The third row down gives you the height listed plus 12 mm (1/2 inch). The bottom row gives you the height listed plus 18 mm (3/4 inch). For the 15.8 cm (6 inch) position, there is only 1 hole, located in the second row. This does not add 6 mm (1/4 inch) to the 15.8 cm (6 inch) position.

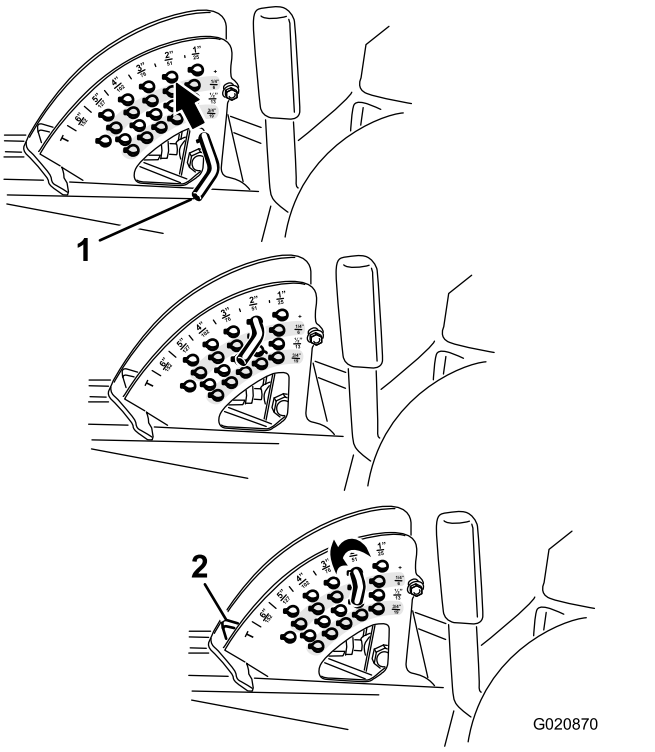

Figure 27

1. Stop pin
2. Height-of-cut stop

4. Adjust the anti-scalp rollers and skids as required.

Operating Tips

Fast Throttle Setting/Ground Speed

To maintain enough power for the machine and deck while mowing, operate the engine at the FAST throttle position and adjust your ground speed for conditions. Decrease the ground speed as the load on the cutting blades increase; increase the ground speed as the load on the blades decrease.

Mowing Direction

Alternate mowing direction to avoid making ruts in the turf over time. This also helps disperse clippings, which enhances decomposition and fertilization.

Cutting Speed

To improve cut quality, use a slower ground speed in certain conditions.

Avoid Cutting Too Low

If the cutting width of the mower is wider than the mower you previously used, raise the cutting height to ensure that uneven turf is not cut too short.

Select the Proper Height-of-Cut Setting

Remove approximately 25 mm (1 inch) or no more than 1/3 of the grass blade when cutting. In exceptionally lush and dense grass, you may have to slow down the forward speed and/or raise the height of cut to the next higher setting.

Important: If you are cutting more than 1/3 of the grass blade off or mowing in sparse long grass or dry conditions, then use flat sail blades to reduce airborne chaff, debris, and deck-drive component strain.

Cutting Long Grass

If the grass ever grows slightly longer than normal, or if it contains a high degree of moisture, raise the cutting height higher than usual and cut the grass at this setting. Then cut the grass again using the lower, normal setting.

Keeping the Mower Clean

Clean clippings and dirt from the underside of the mower after each use. If grass and dirt build up inside the mower, cutting quality eventually becomes unsatisfactory.

To reduce the risk of fire hazard, keep the engine, muffler, battery compartment, parking brake, cutting units, and fuel storage compartment free of grass, leaves, or excessive grease. Clean up any spilled oil or fuel.

Maintaining the Blade

Maintain a sharp blade throughout the cutting season, because a sharp blade cuts cleanly without tearing or shredding the grass blades. Tearing and shredding turns grass brown at the edges, which slows growth and increases the chance of disease. Check the blades daily for sharpness and for any wear or damage. Sharpen the blades as necessary. If a blade is damaged or worn, replace it immediately with a genuine Toro replacement blade.

After Operation

After Operation Safety

- Clean grass and debris from the cutting units, mufflers, and engine compartment to help prevent fires. Clean up oil or fuel spills.
- If the cutting units are in the transport position, use the positive mechanical lock (if available) before you leave the machine unattended.
- Allow the engine to cool before storing the machine in any enclosure.
- Shut off the fuel before storing or transporting the machine.
- Never store the machine or fuel container where there is an open flame, spark, or pilot light, such as on a water heater or on other appliances.
- Keep all parts of the machine in good working condition and all hardware tightened, especially blade-attachment hardware.
- Replace all worn or damaged decals.

Pushing the Machine by Hand

Important: Never tow the machine because hydraulic damage may occur.

Pushing the Machine

1. Disengage the power takeoff (PTO) and turn the ignition key to off. Move the levers to the NEUTRAL-LOCK position and apply the parking brake. Remove the key.
2. Lift the seat.
3. Rotate each bypass valve counterclockwise 1 turn (Figure 28).

   Note: This allows hydraulic fluid to bypass the pump enabling the wheels to turn.

   Important: Do not rotate the bypass valves more than 1 turn. This prevents valves from coming out of the body and causing fluid to run out.

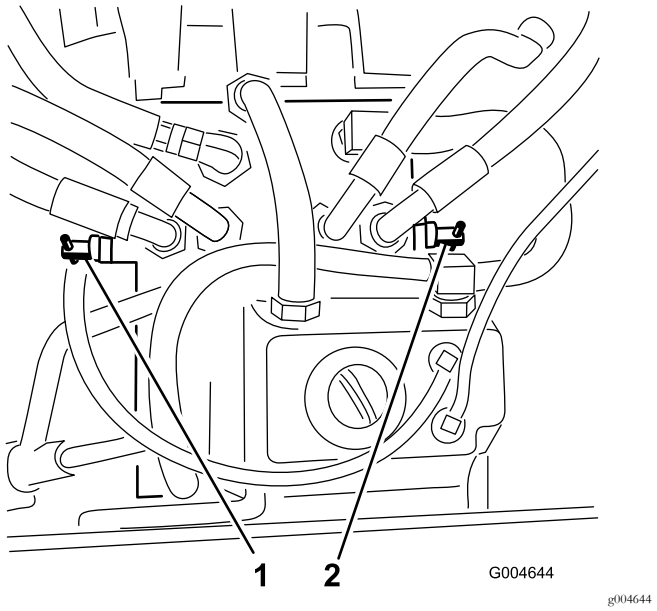

Figure 28

1. Right bypass valve
2. Left bypass valve

4. Disengage the parking brake before pushing.

Changing to Machine Operation

Rotate each bypass valve clockwise 1 turn and hand-tighten them (Figure 28).

Note: The torque should be approximately 8 N·m (71 in-lb). Do not overtighten the bypass valves.

You cannot drive the machine unless the bypass valves are turned inward.

Transporting the Machine

Use a heavy-duty trailer or truck to transport the machine. Ensure that the trailer or truck has all the necessary brakes, lighting, and marking as required by law. Please carefully read all the safety instructions. Knowing this information could help you, your family, pets, or bystanders avoid injury.

⚠ WARNING

Driving on the street or roadway without turn signals, lights, reflective markings, or a slow-moving-vehicle emblem is dangerous and can lead to accidents causing personal injury.

Do not drive the machine on a public street or roadway.

1. If you are using a trailer, connect it to the towing vehicle, and connect the safety chains.
2. If applicable, connect the trailer brakes.
3. Load the machine onto the trailer or truck.
4. Shut off the engine, remove the key, engage the parking brake, and close the fuel valve.
5. Use the tie-down loops on the machine to securely fasten it to the trailer or truck with straps, chains, cable, or ropes ().

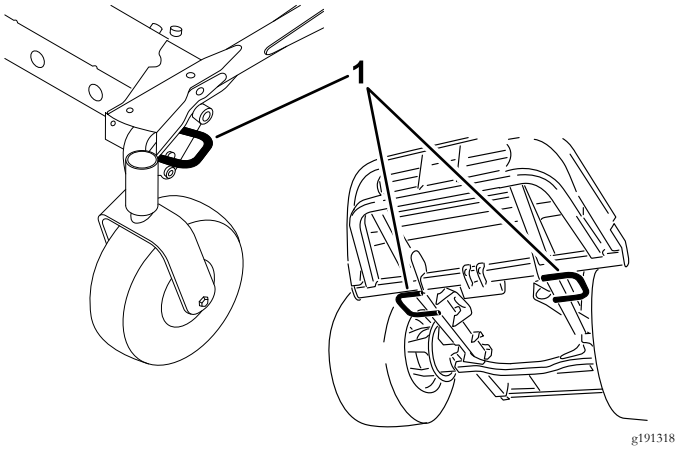

Figure 29

1. Traction unit tie-down loops

Loading the Machine

Use extreme caution when loading or unloading machines onto a trailer or a truck. Use a full-width ramp that is wider than the machine for this procedure. Back up the ramp and drive forward down the ramp (Figure 30).

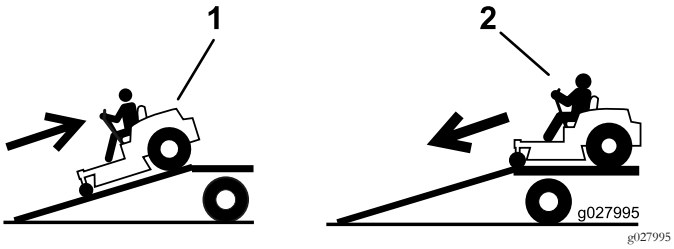

Figure 30

1. Back the machine up the ramp.
2. Drive the machine forward down the ramp.

Important: **Do not use narrow individual ramps for each side of the machine.**

⚠ WARNING

Loading a machine onto a trailer or truck increases the possibility of tip-over and could cause serious injury or death.

- **Use extreme caution when operating a machine on a ramp.**
- **Ensure that the roll bar is in the up position and use the seat belt when loading or unloading the machine. Ensure that the roll bar will clear the top of an enclosed trailer.**
- **Use only a full-width ramp; do not use individual ramps for each side of the machine.**
- **Do not exceed a 15-degree angle between the ramp and the ground or between the ramp and the trailer or truck.**
- **Ensure that the length of ramp is at least 4 times as long as the height of the trailer or truck bed to the ground. This ensures that the ramp angle does not exceed 15 degrees on flat ground.**
- **Back up ramps and drive forward down ramps.**
- **Avoid sudden acceleration or deceleration while driving the machine on a ramp as this could cause a loss of control or a tip-over situation.**

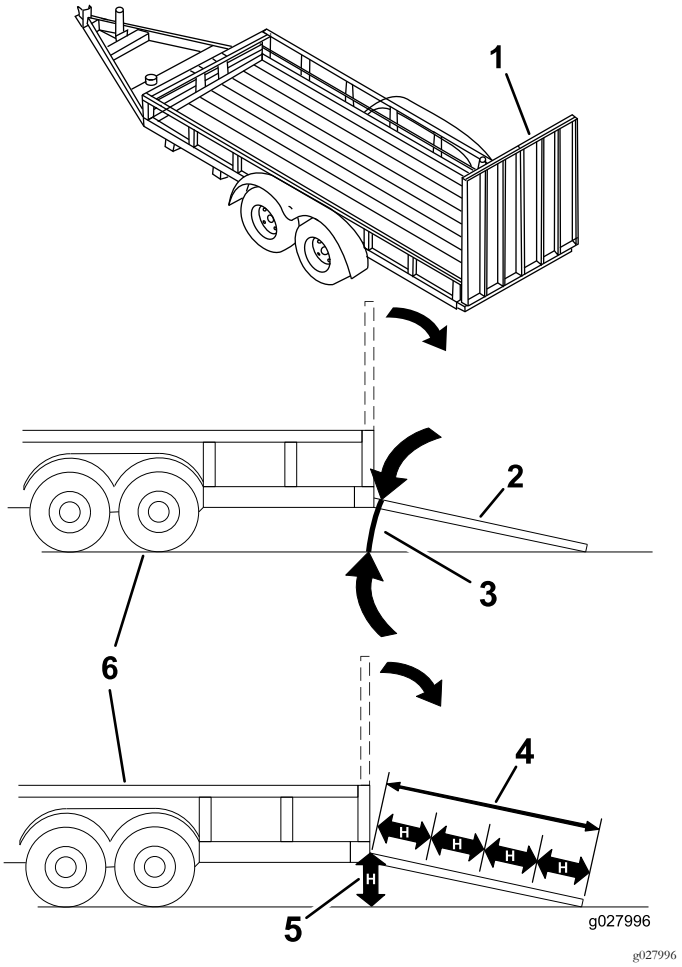

Figure 31

1. Full-width ramp in stowed position
2. Side view of full-width ramp in loading position
3. Not greater than 15 degrees
4. Ramp is at least 4 times as long as the height of the trailer or truck bed to the ground
5. H=height of the trailer or truck bed to the ground
6. Trailer

Maintenance

Note: Determine the left and right sides of the machine from the normal operating position.

Recommended Maintenance Schedule(s)

Maintenance Service Interval	Maintenance Procedure
After the first 10 hours	• Torque the frame-mounting bolts. • Torque the wheel lug nuts.
After the first 50 hours	• Change the mower-deck gearbox lubricant. • Change the engine oil and filter.
After the first 200 hours	• Change the hydraulic fluid and filter.
Before each use or daily	• Test the safety-interlock system. • Check the engine oil level. • Check the engine coolant level. • Clean the radiator with compressed air (more often in dirty and dusty conditions). • Check the hydraulic fluid level. • Clean the mower deck.
Every 50 hours	• Grease the bearing and bushing grease fittings (more often in dirty or dusty conditions and after every washing). • Check the battery cable connections. • Check the tire pressure.
Every 100 hours	• Check the alternator-belt tension.
Every 150 hours	• Check the lubricant in the mower-deck gearbox. • Change the engine oil and filter.
Every 200 hours	• Inspect the cooling-system hoses and seals. Replace them if cracked or torn. • Torque the wheel lug nuts.
Every 400 hours	• Change the mower-deck gearbox lubricant. • Service the air cleaner. • Replace the fuel-filter canister for the water separator. • Drain water or other contaminants from the water separator. • Check the fuel lines and connections.
Every 800 hours	• Change the hydraulic fluid and filter. • Inspect the engine-valve clearance. Refer to your engine owner's manual.
Every 1,500 hours	• Replace moving hoses.
Every 2 years	• Drain and clean the fuel tank. • Flush and replace the cooling-system fluid.

Important: **Refer to your engine owner's manual for additional maintenance procedures. A detailed Service Manual is also available for purchase from your Authorized Toro Distributor.**

Daily Maintenance Checklist

Duplicate this page for routine use.

Maintenance Check Item	For the week of:						
	Mon.	Tues.	Wed.	Thurs.	Fri.	Sat.	Sun.
Check the safety-interlock operation.							
Check the grass deflector in the down position (if applicable).							
Check the parking-brake operation.							
Check the fuel level.							
Check the hydraulic fluid level.							
Check the engine-oil level.							
Check the cooling-system fluid level.							
Check the drain water/fuel separator.							
Check the air-filter restriction indicator.[1]							
Check the radiator and screen for debris							
Check for unusual engine noises.[2]							
Check for unusual operating noises.							
Check the hydraulic hoses for damage							
Check for fluid leaks.							
Check the tire pressure.							
Check the instrument operation.							
Check the condition of the blades.							
Lubricate all grease fittings.[3]							
Touch up damaged paint.							

1. If the indicator shows red
2. Check glow plug and injector nozzles if you notice hard starting, excess smoke, or rough running.
3. Immediately after every washing, regardless of the interval listed.

Notation for areas of concern		
Inspection performed by:		
Item	Date	Information

⚠ CAUTION

If you leave the key in the ignition switch, someone could accidently start the engine and seriously injure you or other bystanders.

Remove the key from the ignition before you do any maintenance.

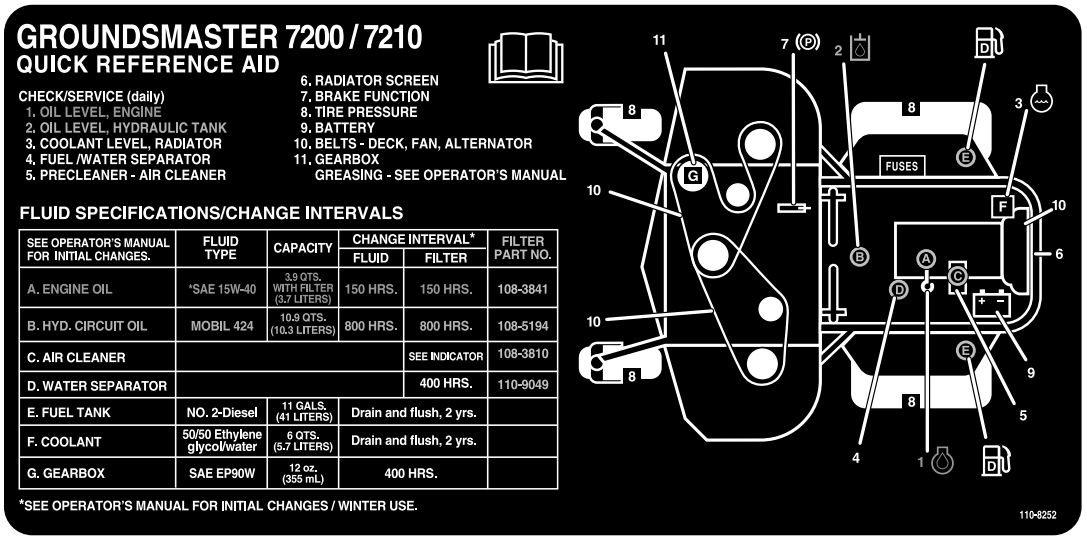

SEE OPERATOR'S MANUAL FOR INITIAL CHANGES.	FLUID TYPE	CAPACITY	CHANGE INTERVAL*		FILTER PART NO.
			FLUID	FILTER	
A. ENGINE OIL	*SAE 15W-40	3.9 QTS. WITH FILTER (3.7 LITERS)	150 HRS.	150 HRS.	108-3841
B. HYD. CIRCUIT OIL	MOBIL 424	10.9 QTS. (10.3 LITERS)	800 HRS.	800 HRS.	108-5194
C. AIR CLEANER				SEE INDICATOR	108-3810
D. WATER SEPARATOR				400 HRS.	110-9049
E. FUEL TANK	NO. 2-Diesel	11 GALS. (41 LITERS)	Drain and flush, 2 yrs.		
F. COOLANT	50/50 Ethylene glycol/water	6 QTS. (5.7 LITERS)	Drain and flush, 2 yrs.		
G. GEARBOX	SAE EP90W	12 oz. (355 mL)	400 HRS.		

*SEE OPERATOR'S MANUAL FOR INITIAL CHANGES / WINTER USE.

decal110-8252nc

Figure 32
Service Interval Chart

Pre-Maintenance Procedures

Important: The fasteners on the covers of this machine are designed to remain on the cover after removal. Loosen all the fasteners on each cover a few turns so that the cover is loose but still attached, then go back and loosen them until the cover comes free. This prevents you from accidentally stripping the bolts free of the retainers.

Pre-Maintenance Safety

- Before adjusting, cleaning, repairing, or leaving the machine, do the following:
  - Park the machine on a level surface.
  - Move the throttle switch to the low-idle position.
  - Disengage the cutting units.
  - Lower the cutting units.
  - Ensure that the traction is in neutral.
  - Engage the parking brake.
  - Shut off the engine and remove the key.
  - Wait for all moving parts to stop.
  - Allow machine components to cool before performing maintenance.
- If the cutting units are in the transport position, use the positive mechanical lock (if available) before you leave the machine unattended.
- If possible, do not perform maintenance while the engine is running. Keep away from moving parts.
- Use jack stands to support the machine or components when required.
- Carefully release pressure from components with stored energy.

Unlatching the Seat

To access the hydraulic and other systems under the seat, unlatch the seat and swing it forward.

1. Use the seat-position adjustment lever to slide the seat all the way forward.
2. Pull the seat latch lever forward and lift up to unlatch the seat (Figure 33).

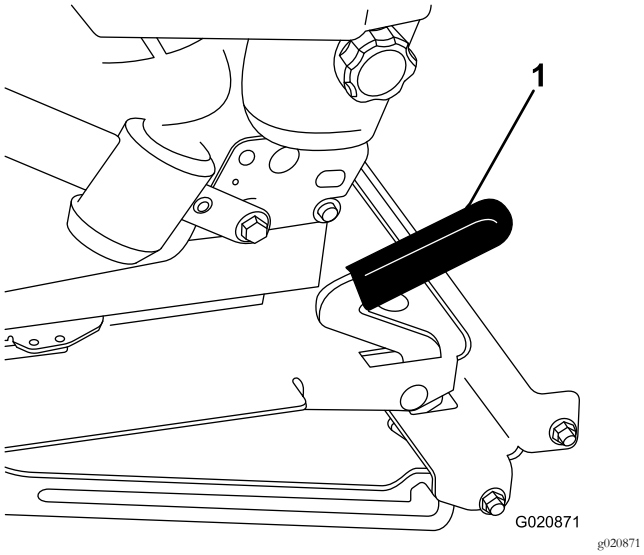

Figure 33

1. Seat latch

Lubrication

Greasing the Bearings and Bushings

Service Interval: Every 50 hours (more often in dirty or dusty conditions and after every washing).

The machine has grease fittings that you must lubricate regularly with No. 2 lithium grease. Lubricate more often in dirty or dusty conditions because dirt can get into the bearings and bushings and cause accelerated wear.

1. Wipe the grease fittings clean so that foreign matter cannot be forced into the bearing or bushing.
2. Pump grease into the fittings.
3. Wipe off excess grease.

Note: Improper wash-down procedures can negatively affect bearing life. Do not wash down the machine when it is still hot and avoid directing high-pressure or high-volume spray at the bearings or seals.

Servicing the Mower-Deck Gear Box Lubricant

The gear box is designed to operate with SAE EP90W gear lube. Although the gear box comes from the factory with lubricant, check the level of the lubricant in the cutting unit before operating it and as recommended in the Daily Maintenance Checklist (page 33).

Checking the Mower-Deck Gearbox Lubricant

Service Interval: Every 150 hours

1. Position the machine and mower deck on a level surface.
2. Lower the mower deck to the 2.5 cm (1 inch) height of cut.
3. Disengage the PTO, move the motion-control levers to the NEUTRAL-LOCK position, and engage the parking brake.
4. Move the throttle lever to the SLOW position, shut off the engine, remove the key, and wait for all moving parts to stop before leaving the operating position.
5. Lift the footrest, exposing the top of the mower deck.
6. Remove the dipstick/fill plug from the top of the gearbox and make sure that the lubricant is between the marks on the dipstick (Figure 34).

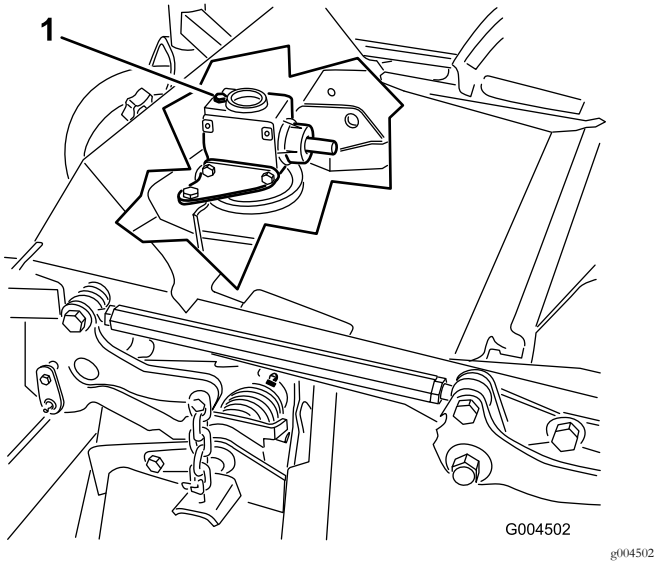

Figure 34

1. Fill plug and dipstick

7. If the lubricant level is low, add enough lubricant until the level is between the marks on the dipstick.

   Important: Do not overfill the gearbox; overfilling the gearbox may damage it.

Changing the Mower-Deck Gearbox Lubricant

Service Interval: After the first 50 hours

Every 400 hours

1. Position the machine and cutting unit on a level surface.
2. Lower the mower deck to the 2.5 cm (1 inch) height of cut.
3. Disengage the PTO, move the motion-control levers to the NEUTRAL-LOCK position, and engage the parking brake.
4. Move the throttle lever to the SLOW position, shut off the engine, remove the key, and wait for all moving parts to stop before leaving the operating position.
5. Lift the footrest, exposing the top of the mower deck.
6. Remove the dipstick/fill plug from the top of the gearbox (Figure 34).
7. Place a funnel and drain pan under the drain plug located under the front of the gearbox and remove the plug, draining the lubricant into the pan.
8. Replace the drain plug.
9. Add enough lubricant, approximately 283 ml (12 oz), until the level is between the marks on the dipstick.

   Important: Do not overfill the gearbox; overfilling the gearbox may damage it.

Engine Maintenance

Engine Safety

- Shut off the engine before checking the oil or adding oil to the crankcase.
- Do not change the governor speed or overspeed the engine.

Checking the Air Cleaner

1. Check the air-cleaner body for damage, which could possibly cause an air leak. Replace a damaged air-cleaner body.
2. Check the air-intake system for leaks, damage, or loose hose clamps.
3. Service the air-cleaner filter when the air-cleaner indicator shows red or every 400 hours and service it more frequently in extremely dusty or dirty conditions (Figure 35).

   Important: Do not over-service the air filter.

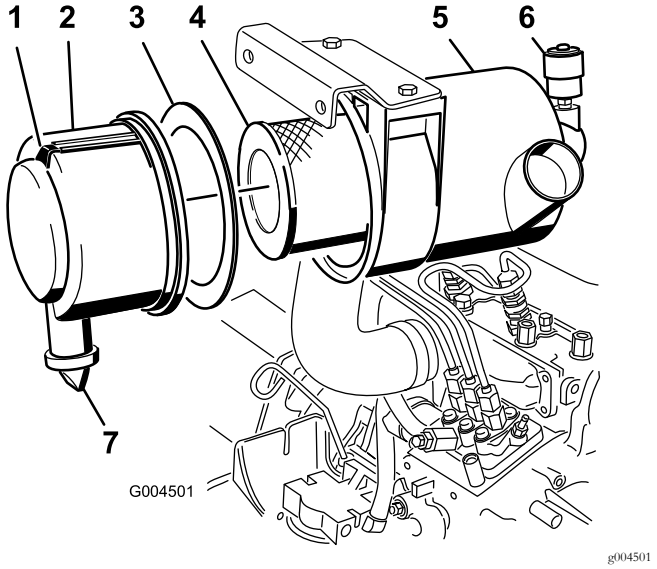

Figure 35

1. Air-cleaner cover
2. Gasket
3. Filter
4. Air-cleaner body
5. Air-cleaner indicator
6. Air-cleaner latch
7. Rubber outlet valve

4. Be sure that the cover is seated correctly and seals with the air-cleaner body.

Servicing the Air Cleaner

Service Interval: Every 400 hours

Note: If the foam gasket in the cover is damaged, replace it.

Important: **Avoid using high-pressure air, which could force dirt through the filter into the intake tract.**

Important: **Do not clean the used filter to avoid damage to the filter media.**

Important: **Do not use a damaged filter.**

Important: **Do not apply pressure to the flexible center of the filter.**

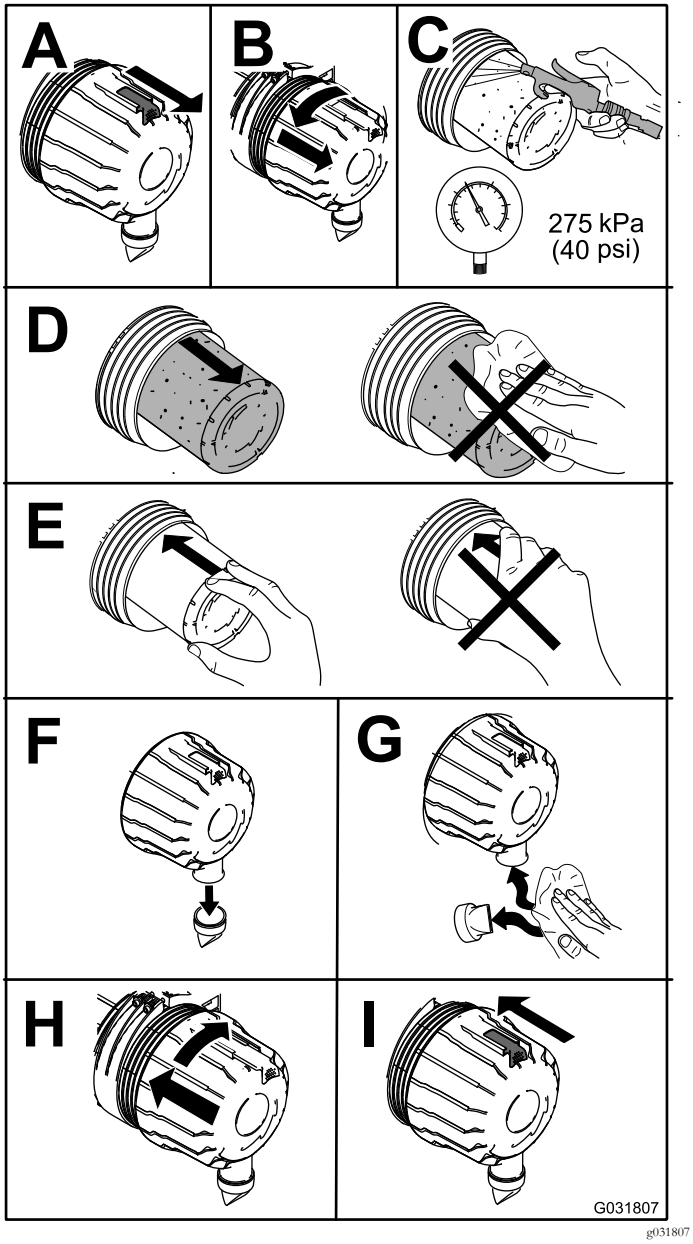

Figure 36

Servicing the Engine-Oil

Checking the Engine-Oil Level

Service Interval: Before each use or daily

The engine is shipped with oil in the crankcase; however, check the oil level before and after you first start the engine. Check the oil level before operating the machine each day or each time you use the machine.

The crankcase capacity is approximately 3.8 L(4 quarts) with the filter. Use high-quality engine oil that meets the following specifications:

- API Classification Level Required: CH-4, CI-4 or higher.
- Preferred oil: SAE 15W-40 (above 0°F (-17°C)
- Alternate oil: SAE 10W-30 or 5W-30 (all temperatures)

Note: Toro Premium Engine oil is available from your distributor in either 15W-40 or 10W-30 viscosity. See the parts catalog for part numbers.

1. Park the machine on a level surface, lower the mower deck, move the throttle lever to the SLOW position, shut off the engine, and remove the key from the ignition switch.
2. Open the hood.
3. Check the engine oil.

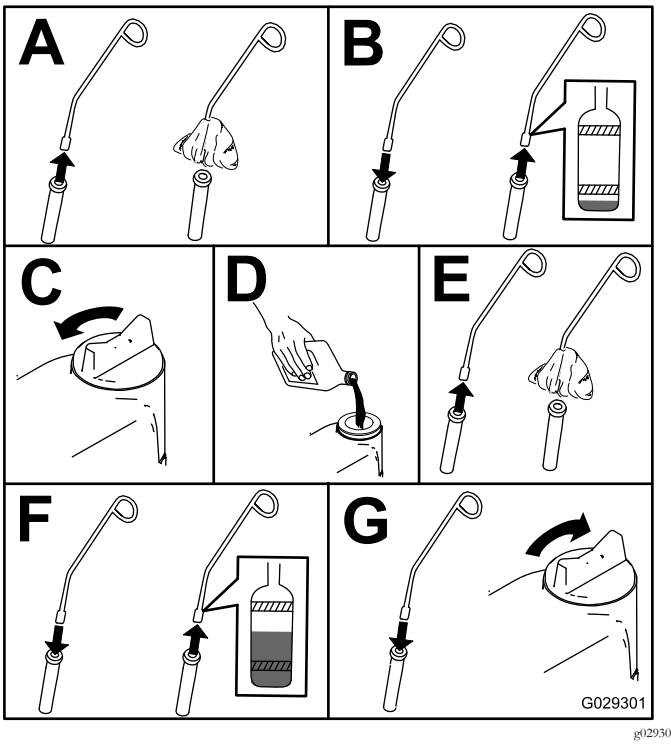

Figure 37

Changing the Engine Oil And Filter

Service Interval: After the first 50 hours

Every 150 hours

If possible, run the engine just before changing the oil because warm oil flows better and carries more contaminants than cold oil.

1. Position the machine on a level surface.
2. Open the hood.
3. Change the oil (Figure 38).

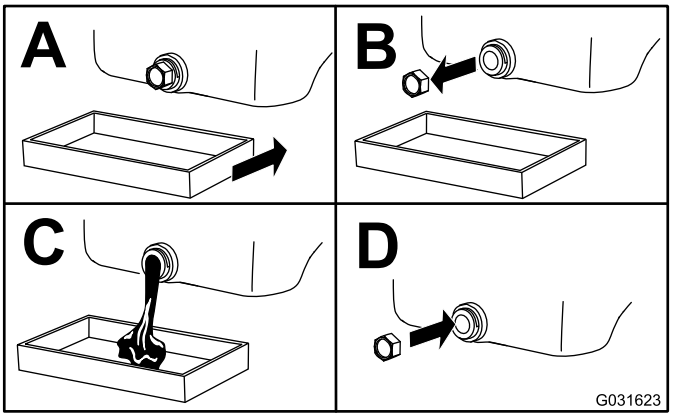

Figure 38

4. Replace the oil filter (Figure 39).

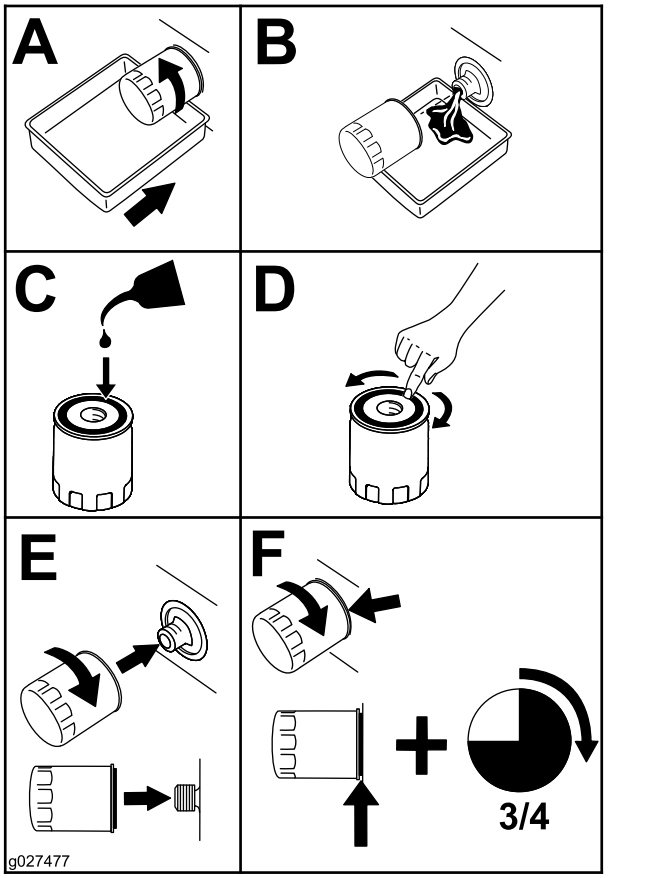

Figure 39

5. Fill the crankcase with oil; refer to (page).

Fuel System Maintenance

⚠ DANGER

Under certain conditions, diesel fuel and fuel vapors are highly flammable and explosive. A fire or explosion from fuel can burn you and others and can cause property damage.

- **Use a funnel and fill the fuel tank outdoors, in an open area, when the engine is off and is cold. Wipe up any fuel that spills.**
- **Do not fill the fuel tank completely full. Add fuel to the fuel tank until the level is to the bottom of the filler neck.**
- **Never smoke when handling fuel, and stay away from an open flame or where fuel fumes may be ignited by a spark.**
- **Store fuel in a clean, safety-approved container and keep the cap in place.**

Servicing the Water Separator

Service Interval: Every 400 hours

Every 400 hours

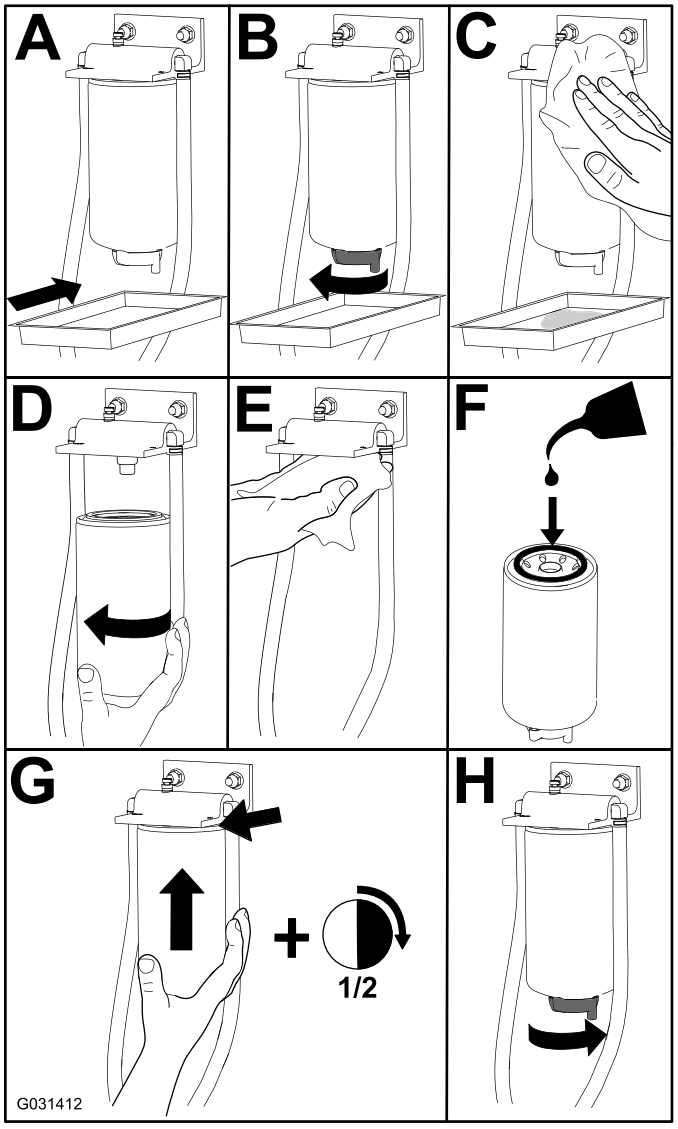

g031412

Figure 40

Cleaning the Fuel Tank

Service Interval: Every 2 years

Remove and clean the in-line strainers after draining the tank. Use clean diesel fuel to flush out the tank.

Important: Drain and clean the tank if the fuel system becomes contaminated or if you are storing the machine for an extended period.

Checking the Fuel Lines and Connections

Service Interval: Every 400 hours

Inspect the fuel lines for deterioration, damage, chaffing, or loose connections.

Bleeding the Fuel System

1. Park the machine on a level surface. Ensure that the fuel tank is at least half full.
2. Unlatch and raise the hood.
3. Place a rag under the air-bleed screw on the fuel-injection pump and open it (Figure 41).

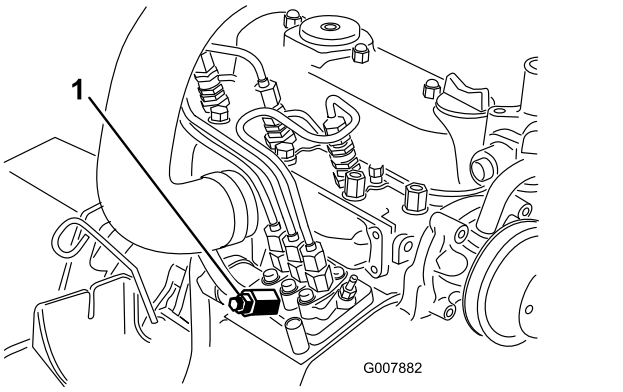

Figure 41

1. Fuel-injection-pump bleed screw

4. Turn the ignition key to the ON position.

   Note: The electric fuel pump begins operation, thereby forcing air out at the air-bleed screw.

   ⚠ CAUTION

   The engine may start during this procedure. Moving fans and belts in a running engine can severely injure you or bystanders.

   Keep hands, fingers, loose clothing/jewelry, and hair away from the engine fan and belt during this procedure.

5. Leave the key in the ON position until a solid stream of fuel flows out around the screw.
6. Tighten the screw and turn the key to the OFF position.

   Note: Normally, the engine should start after you bleed the fuel system. However, if the engine does not start, air may be trapped between injection pump and injectors; refer to Bleeding Air from the Injectors (page 40).

Bleeding Air from the Injectors

Note: Use this procedure only if you purged the fuel system through normal priming procedures and the engine does not start; refer to Bleeding the Fuel System (page 40).

1. Place a rag under the pipe connection coming from the injection pump to the No. 1 injector nozzle as illustrated in Figure 42.

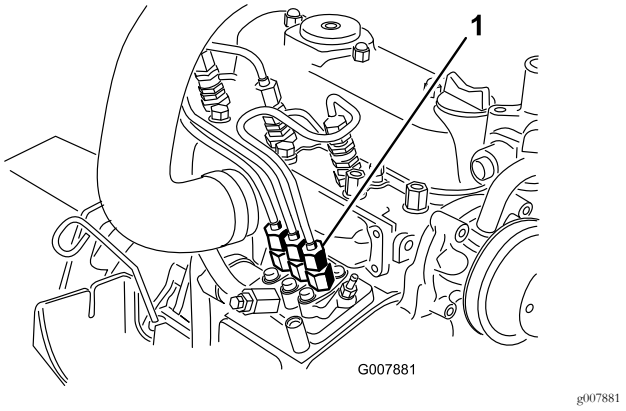

Figure 42

1. Pipe connection from the injection pump to the No. 1 injector nozzle

2. Move the throttle to the FAST position.
3. Turn the ignition key to the START position and watch the fuel flow around the connector.

   ⚠ CAUTION

   The engine may start during this procedure. Moving fans and belts in a running engine can severely injure you or bystanders.

   Keep hands, fingers, loose clothing/jewelry, and hair away from the engine fan and belt during this procedure.

4. Tighten the pipe connector securely when it attains a solid flow.
5. Turn the key to the OFF position.
6. Repeat this procedure for the remaining nozzles.

Electrical System Maintenance

Electrical System Safety

- Disconnect the battery before repairing the machine. Disconnect the negative terminal first and the positive last. Connect the positive terminal first and the negative last.
- Charge the battery in an open, well-ventilated area, away from sparks and flames. Unplug the charger before connecting or disconnecting the battery. Wear protective clothing and use insulated tools.

WARNING

CALIFORNIA
Proposition 65 Warning

Battery posts, terminals, and related accessories contain lead and lead compounds, chemicals known to the State of California to cause cancer and reproductive harm. Wash hands after handling.

Servicing the Battery

Service Interval: Every 50 hours

If you store the machine in a location where temperatures are extremely high, the battery runs down more rapidly than if the machine is stored in a location where the temperature is cool.

Keep the top of the battery clean by washing it periodically with a brush dipped in ammonia or bicarbonate soda solution. Flush the top surface with water after cleaning it.

Important: Do not remove the fill caps while cleaning the battery.

The battery cables must be tight on the terminals to provide good electrical contact.

If corrosion occurs at the terminals, disconnect the cables, negative (-) cable first, and scrape the clamps and terminals separately. Connect the cables, positive (+) cable first, and coat the terminals with petroleum jelly.

⚠ WARNING

Battery terminals or metal tools could short against metal machine components, causing sparks. Sparks can cause the battery gasses to explode, resulting in personal injury.

- **When removing or installing the battery, do not allow the battery terminals to touch any metal parts of the machine.**
- **Do not allow metal tools to short between the battery terminals and metal parts of the machine.**

⚠ WARNING

Incorrect battery cable routing could damage the machine and cables, causing sparks. Sparks can cause the battery gasses to explode, resulting in personal injury.

- **Always disconnect the negative (black) battery cable before disconnecting the positive (red) cable.**
- **Always connect the positive (red) battery cable before connecting the negative (black) cable.**

Storing the Battery

If you are storing the machine more than 30 days, remove the battery and charge it fully. Either store it on a shelf or on the machine. Do not connect the cables if you store it on the machine. Store the battery in a cool environment to prevent the battery from discharging rapidly. To prevent the battery from freezing, make sure it is fully charged. The specific gravity of a fully charged battery is 1.265 to 1.299.

Checking the Fuses

The fuses are located under the control panel. Access them through the side panel cover (Figure 43). To open the side panel cover, release the 2 latches and pull out on it.

If the machine stops or has other electrical system issues, check the fuses. Grasp each fuse in turn and remove them 1 at a time, checking if any are blown.

Important: If you need to replace a fuse, always use the same type and amperage-rated fuse as the one you are replacing, otherwise you could damage the electrical system. Refer to the decal next to the fuses for a diagram of each fuse and its amperage (Figure 44).

Note: If a fuse blows frequently, you probably have a short in the electrical system and should have it serviced by a qualified service technician.

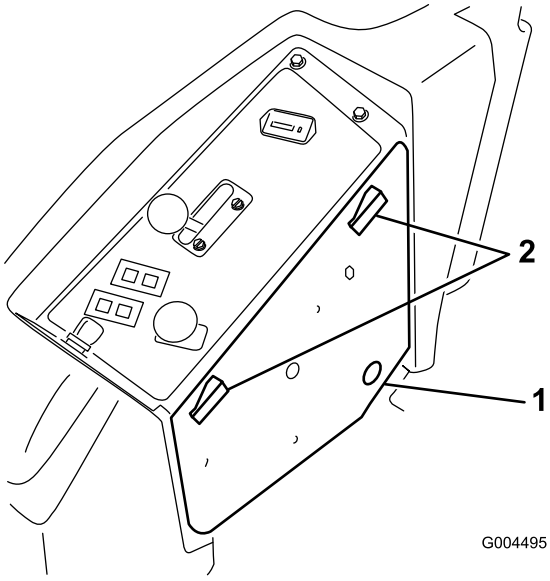

g004495

Figure 43

1. Side panel cover
2. Latch

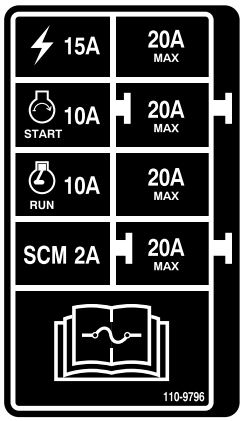

decal110-9796nc

Figure 44

Drive System Maintenance

Checking the Tire Pressure

Service Interval: Every 50 hours

Check the pressure after every 50 operating hours or monthly, whichever occurs first (Figure 45).

Maintain the air pressure in the front and rear tires. The correct air pressure is 124 kPa (15 psi) in the rear tires and 103 kPa (25 psi) in the caster wheels. Uneven tire pressure can cause an uneven cut. Check the tires when they are cold to get the most accurate pressure reading.

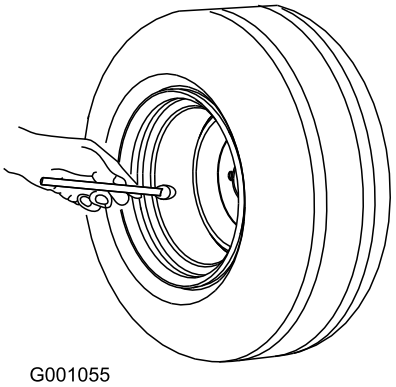

g001055

Figure 45

Replacing the Caster Wheels and Bearings

1. Obtain a new caster-wheel assembly, cone bearings, and bearing seals from your Authorized Toro Distributor.
2. Remove the locknut from the bolt (Figure 46).

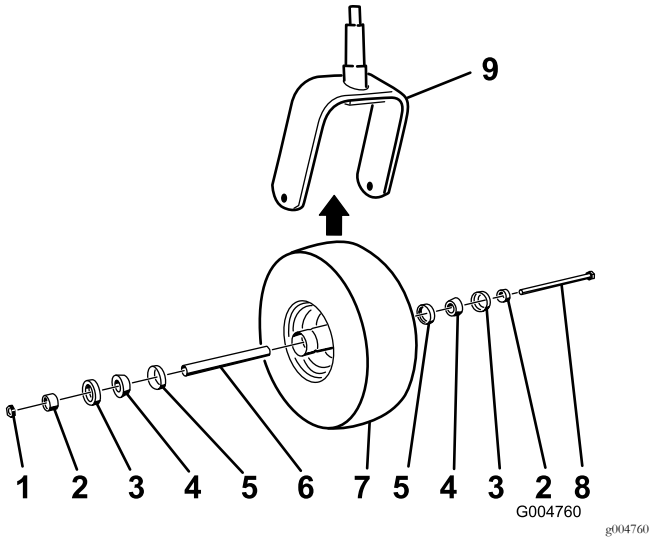

Figure 46

1. Locknut
2. Bearing spacer
3. Outer bearing seal
4. Cone bearing
5. Inner bearing seal
6. Spacer
7. Caster wheel
8. Axle bolt
9. Caster fork

3. Grasp the caster wheel and slide the bolt out of the fork or pivot arm.
4. Discard the old caster wheel and bearings.
5. Assemble the caster wheel by pushing the cone bearings and seals, packed with grease, into the wheel hub, positioned as shown in Figure 46.
6. Slide the spacer into the wheel hub through the bearings, captivating the spacer inside the wheel hub with 2 bearing spacers.

   Important: Ensure that the seal lips are not folded inward.

7. Install the caster-wheel assembly between the castor fork and secure it in place with the bolt and locknut.
8. Tighten the locknut until the wheel no longer spins freely, then back it off just until the wheel spins freely.
9. Attach a grease gun to the grease fitting on the caster wheel and fill it with No. 2 lithium grease.

Cooling System Maintenance

Cooling System Safety

- **Swallowing engine coolant can cause poisoning; keep out of reach from children and pets.**
- Discharge of hot, pressurized coolant or touching a hot radiator and surrounding parts can cause severe burns.
  - Always allow the engine to cool at least 15 minutes before removing the radiator cap.
  - Use a rag when opening the radiator cap, and open the cap slowly to allow steam to escape.

Checking the Cooling System

Service Interval: Before each use or daily

The cooling system is filled with a 50/50 solution of water and permanent ethylene glycol anti freeze. The capacity of the cooling system is 7.5 L (6 US qt).

1. Check the level of the coolant in the expansion tank (Figure 47).

   Note: The coolant level should be between the marks on the side of the tank.

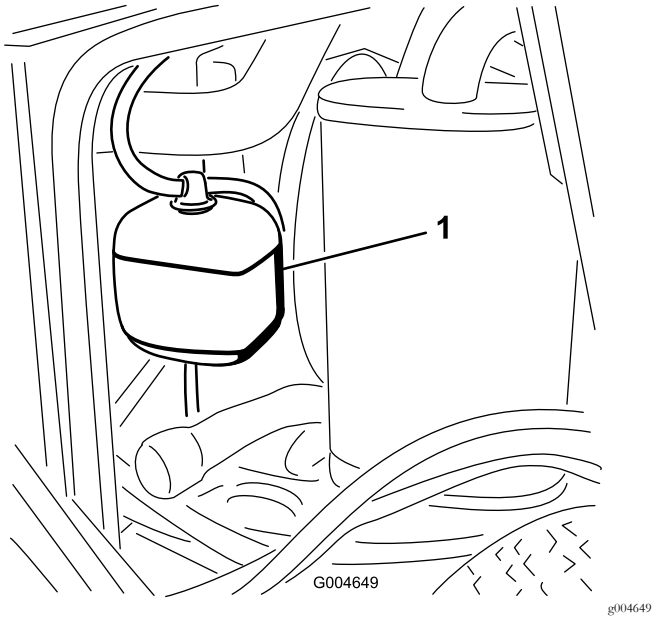

Figure 47

1. Expansion tank

2. If coolant level is low, remove the expansion tank cap and replenish the system.

   Important: Do not overfill.

3. Install the expansion-tank cap.

Cleaning the Radiator

Service Interval: Before each use or daily

Every 1,500 hours—Replace moving hoses.

Every 200 hours—Inspect the cooling-system hoses and seals. Replace them if cracked or torn.

Every 2 years—Flush and replace the cooling-system fluid.

Clean the radiator to prevent the engine from overheating.

Note: If the mower deck or engine shuts off due to overheating, check the radiator for excessive buildup of debris.

Clean the radiator as follows:

1. Open the hood.
2. Working from the fan side of the radiator, blow out debris with low pressure (345 kPa or 50 psi), compressed air. Repeat from the front of the radiator and the other fan side.

   Important: Do not use water.
3. After you thoroughly clean the radiator, clean out debris that may have collected in the channel at the radiator base.
4. Close the hood.

Brake Maintenance

Adjusting the Parking-Brake Interlock Switch

1. Stop the machine, move the motion-control levers to the NEUTRAL-LOCK position, engage the parking brake, and remove the ignition key.
2. Remove the bolts securing the front panel and remove the panel (Figure 48).

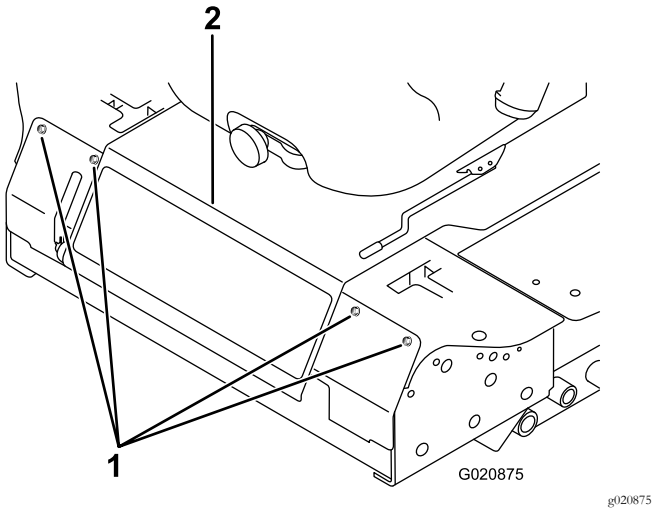

Figure 48

1. Bolt
2. Control panel

3. Loosen the 2 jam nuts securing the parking-brake interlock switch to the mounting bracket.

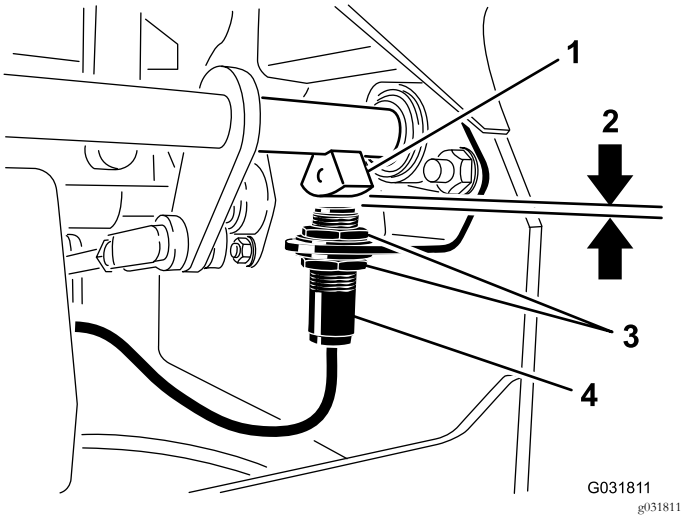

Figure 49

1. Brake-shaft sensor
2. 4 mm (5/32 inch)
3. Jam nut
4. Parking-brake interlock switch

4. Move the switch up or down on the bracket until the distance between the brake-shaft sensor and the switch plunger is 4 mm (5/32 inch) as shown in Figure 49.

   Note: Make sure that the brake-shaft sensor does not contact the switch plunger.

5. Secure the switch jam nuts.
6. Test the adjustment as follows:
   A. Ensure that the parking brake is engaged and you are not sitting on the seat, then start the engine.
   B. Move the control levers out of the NEUTRAL-LOCK position.

      Note: The engine should stop. If not, check the adjustment that you made to the switch.
7. Install the front panel.

Belt Maintenance

Checking the Alternator-Belt Tension

Service Interval: Every 100 hours

1. Apply 44 N (10 lb) of force to the alternator belt, midway between the pulleys.
2. If the deflection is not 10 mm (3/8 inch), loosen the alternator mounting bolts (Figure 50).

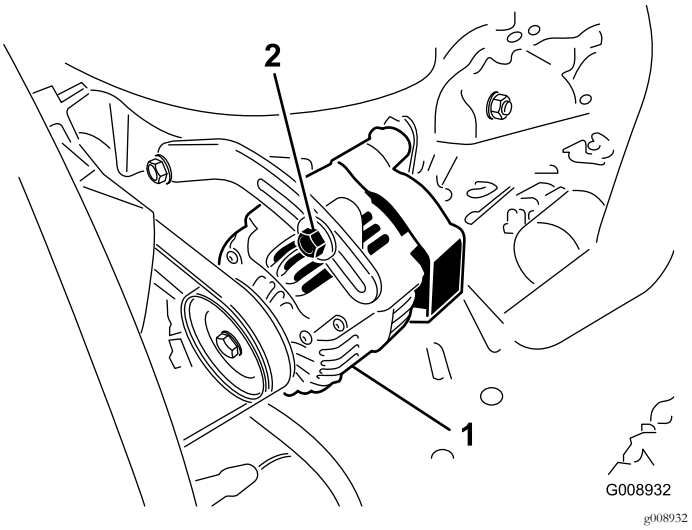

Figure 50

1. Mounting bolt
2. Alternator

3. Increase or decrease the alternator-belt tension.
4. Tighten the mounting bolts.
5. Check the deflection of the belt again to ensure that the tension is correct.

Adjusting the Control-Lever Neutral-Interlock Switch

1. Stop the machine, move the motion-control levers to the NEUTRAL-LOCK position, engage the parking brake, and remove the ignition key.
2. Remove the bolts securing the front panel and remove the panel (Figure 51).

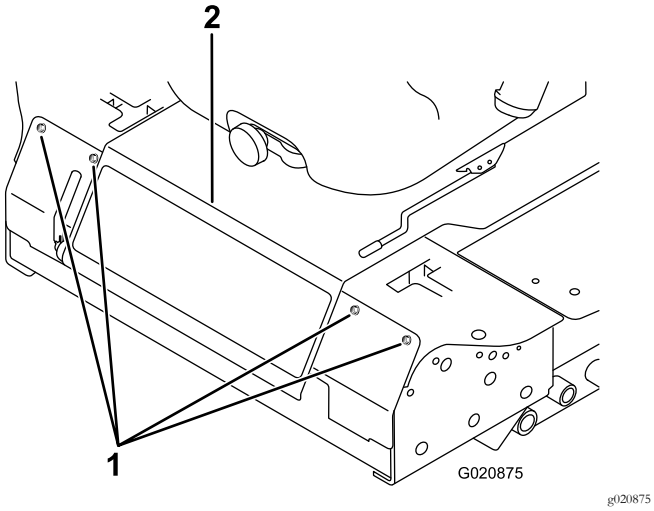

Figure 51

1. Bolt
2. Control panel

3. Loosen the 2 screws securing the interlock switch (Figure 52).

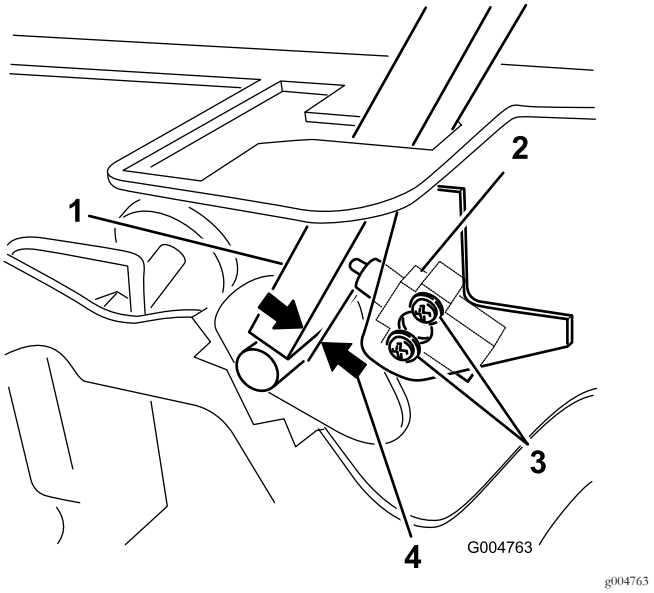

Figure 52

1. Control lever
2. Neutral-interlock switch
3. Screw
4. 0.4 to 1 mm (0.015 to 0.045 inch)

4. Holding the control lever against the frame, move the switch toward the lever until the distance between the lever and switch body is 0.4 to 1 mm (0.015 to 0.045 inch) as shown in Figure 52.
5. Secure the switch.
6. Repeat steps 3 to 5 for the other lever.
7. Install the front panel.

Adjusting the Control-Lever Neutral Return

If the motion-control levers do not align with the neutral slots when released from the REVERSE position, adjustment is required. Adjust each lever, spring, and rod separately.

1. Disengage the PTO, move the control lever to the NEUTRAL-LOCK position, and engage the parking brake.
2. Move the throttle lever to the SLOW position, shut off the engine, remove the key, and wait for all moving parts to stop before leaving the operating position.
3. Remove the bolts securing the front panel and remove the panel (Figure 53).

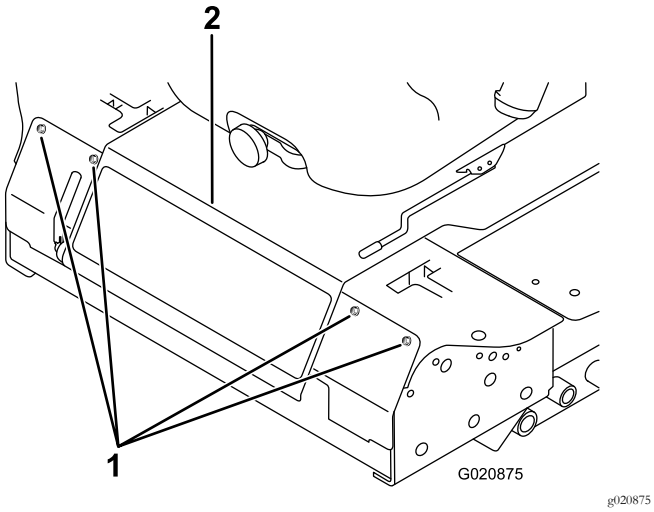

Figure 53

1. Bolt
2. Control panel

4. Move the control lever to the NEUTRAL position but **not locked** (Figure 55).
5. Pull the lever back until the clevis pin (on an arm above the pivot shaft) contacts the end of the slot (just beginning to put pressure on the spring) as shown in Figure 54.

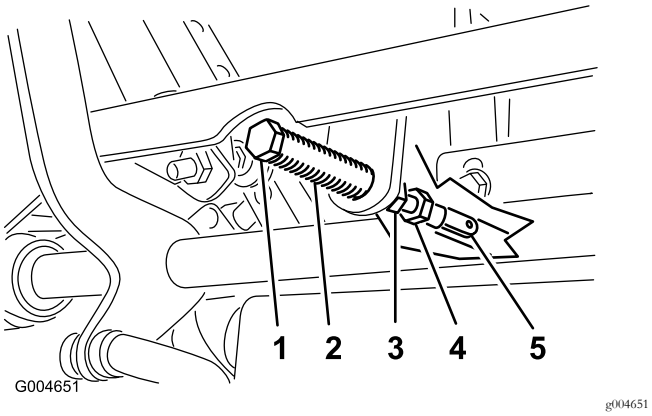

Figure 54

1. Clevis pin
2. Slot
3. Jam nut
4. Adjustment bolt
5. Yoke

6. Check where the control lever is relative to notch in the console (Figure 55).

   Note: The control lever should be centered, allowing lever to pivot outward to the NEUTRAL-LOCK position.

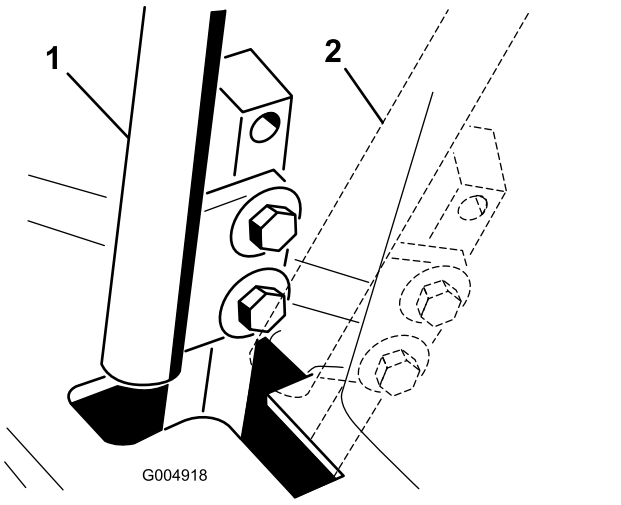

Figure 55

1. NEUTRAL position
2. NEUTRAL-LOCK position

7. If adjustment is needed, loosen the nut and jam nut against the yoke (Figure 54).
8. Applying slight rearward pressure on the motion-control lever, turn the head of the adjustment bolt in the appropriate direction until the control lever is centered in the NEUTRAL-LOCK position (Figure 54).

   Note: Rearward pressure on the lever keeps the pin at the end of the slot and allow the adjustment bolt to move the lever to the appropriate position.
9. Tighten the nut and jam nut (Figure 54).
10. Repeat steps 4 through 9 for the other control lever.
11. Install the front panel.

Adjusting the Traction Drive for Neutral

Make this adjustment with the drive wheels turning.

⚠ DANGER

Mechanical or hydraulic jacks may fail to support the machine and cause a serious injury.

- **Use jack stands when supporting the machine.**
- **Do not use hydraulic jacks.**

⚠ WARNING

The engine must be running to perform this adjustment. Contact with moving parts or hot surfaces may cause personal injury.

Keep hands, feet, face, clothing, and other body parts away from rotating parts, muffler, and other hot surfaces.

1. Raise the frame onto stable jack stands so that the drive wheels can rotate freely.
2. Slide the seat forward, unlatch it, and swing it up and forward.
3. Disconnect the electrical connector from the seat safety switch.
4. Temporarily install a jumper wire across the terminals in the wire harness connector.
5. Start the engine, ensure that the throttle lever is midway between the FAST and SLOW positions, and release the parking brake.

   Note: The motion-control levers must be in the NEUTRAL-LOCK position while you make any adjustments.
6. Adjust the pump rod length on one side by rotating the hex shaft, in the appropriate direction, until the corresponding wheel is still or slightly creeping in reverse (Figure 56).

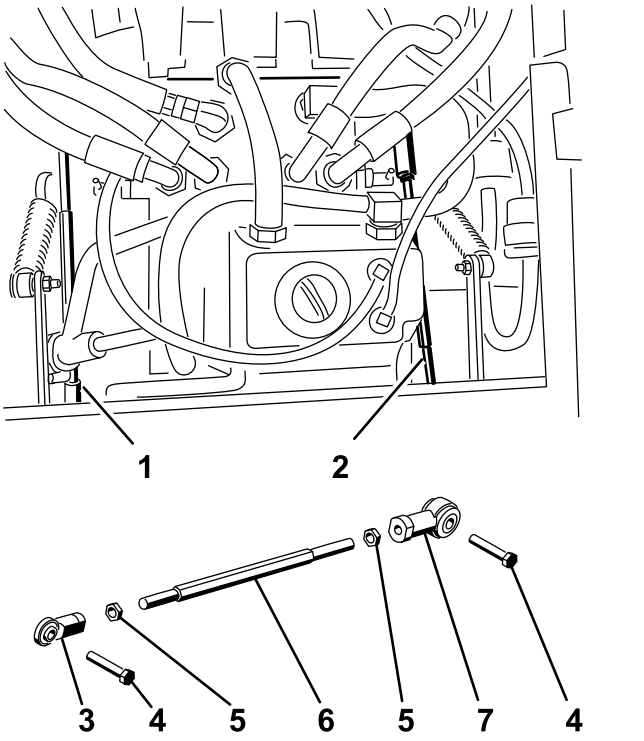

Figure 56

g004488

Figure 56

1. Right pump rod
2. Left pump rod
3. Ball joint
4. Bolt
5. Jam nut
6. Hex shaft
7. Ball joint

7. Move the motion-control lever forward and reverse, then back to neutral.

   Note: The wheel must stop turning or slightly creep in reverse.
8. Move the throttle lever to the FAST position.

   Note: Make sure that the wheel remains stopped or slightly creeps in reverse; adjust it if necessary.
9. Repeat steps 6 through 8 for the other side of the machine.
10. Tighten the jam nuts at the ball joints (Figure 54).
11. Move the throttle lever to the SLOW position and shut off the engine.
12. Remove the jumper wire from the wire harness connector and plug the connector into the seat switch.

⚠ WARNING

The electrical system does not perform proper safety shutoff with the jumper wire installed.

- **Remove the jumper wire from the wire harness connector and plug the connector into the seat switch when you complete adjustment.**
- **Never operate the machine with the jumper installed and the seat switch bypassed.**

13. Lower the seat into position.
14. Remove the jack stands.

Adjusting the Maximum Ground Speed

1. Disengage the PTO, move the motion-control levers to the NEUTRAL-LOCK position, and engage the parking brake.
2. Move the throttle lever to the SLOW position, shut off the engine, remove the key, and wait for all moving parts to stop before leaving the operating position.
3. Remove the bolts securing the front panel and remove the panel (Figure 57).

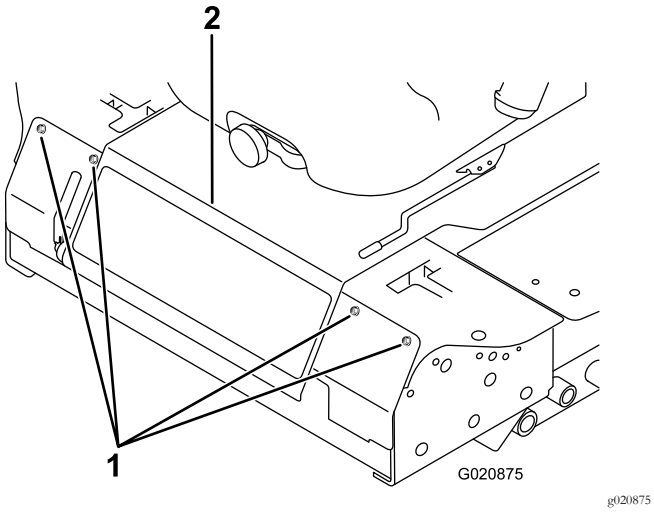

Figure 57

1. Bolt
2. Control panel

4. Loosen the jam nut on the stop bolt for a control lever (Figure 58).

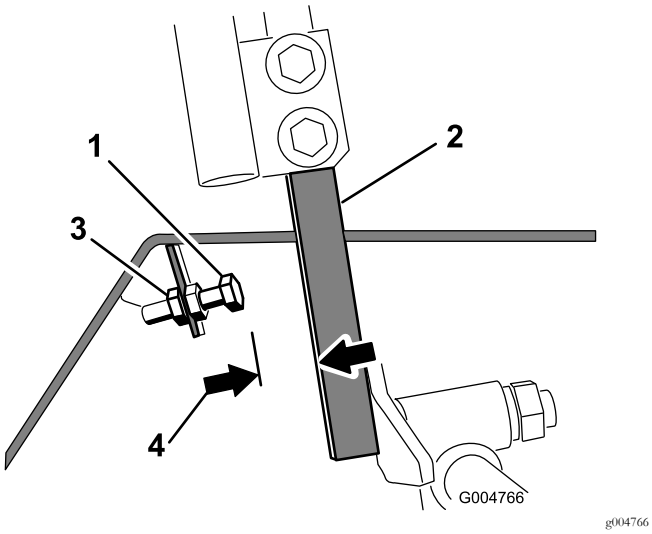

Figure 58

1. Stop bolt
2. Control lever
3. Jam nut
4. 1.5 mm (0.060 inch)

5. Thread the stop bolt all the way in (away from the control lever).
6. Push the control lever all the way forward until it stops and hold it there.
7. Thread the stop bolt out (toward the control lever) until there is a gap of 1.5 mm (0.060 inch) between the head of the stop bolt and the control lever.

   Note: If you want to reduce the maximum machine speed, back each stop bolt out an equal amount toward the control lever until you reach the desired maximum speed. You may need to test your adjustment several times.

8. Tighten the jam nut to secure the stop bolt in place.
9. Repeat steps 4 through 8 for the other control lever.
10. Install the front panel.
11. Ensure that the machine drives straight and does not turn when both control levers are pushed all the way forward.

    Note: If the machine turns, the stop bolts are not evenly set and you need to adjust them further.

Adjusting the Tracking

1. Disengage the PTO, move the motion-control levers to the NEUTRAL-LOCK position, and engage the parking brake.
2. Move the throttle lever to the SLOW position, shut off the engine, remove the key, and wait for all moving parts to stop before leaving the operating position.
3. Loosen the bolts securing the control levers (Figure 59).

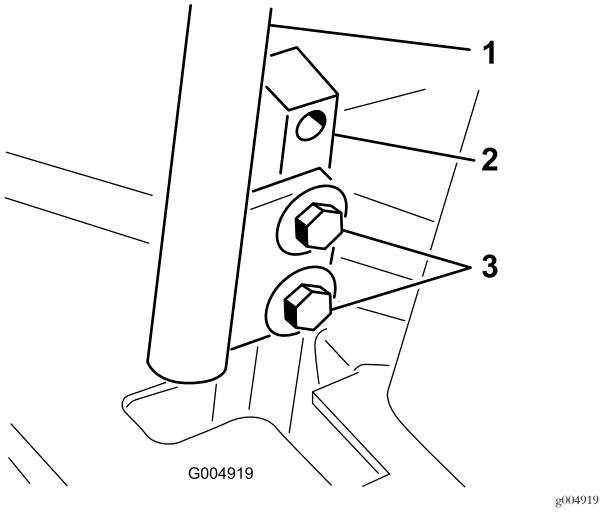

Figure 59

1. Control lever
2. Control-lever post
3. Bolts

4. Have someone push the control-lever posts (not the control levers) all the way forward into the maximum-speed position and hold them there.
5. Adjust the control levers so that they line up and tighten the bolts, securing the levers to the posts (Figure 60).

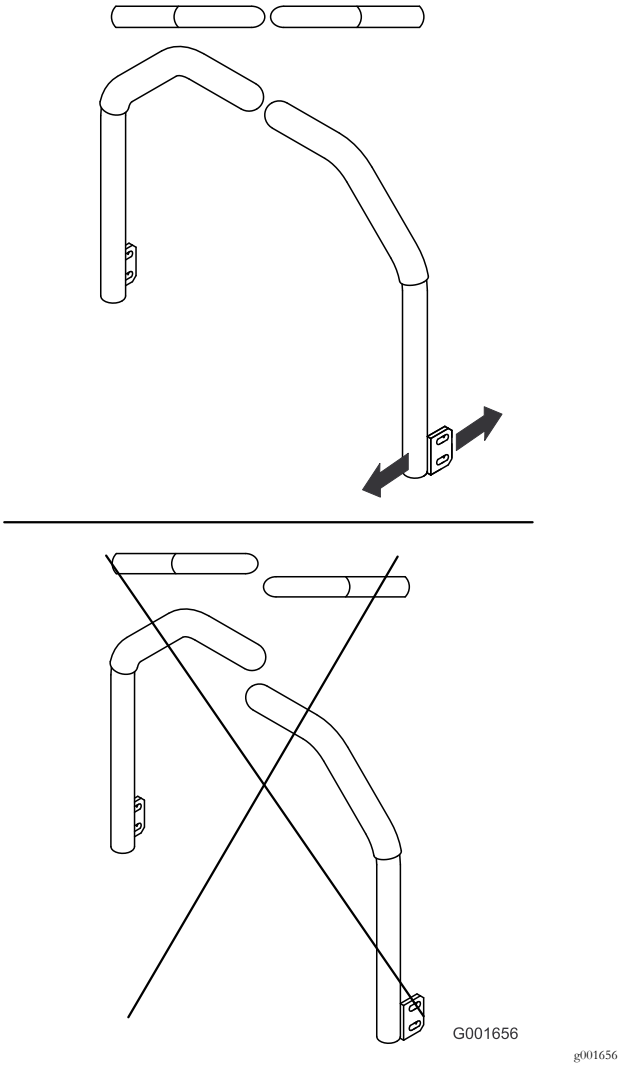

Figure 60

Hydraulic System Maintenance

The reservoir is filled at the factory with approximately 4.7 L (5 quarts) of high-quality tractor transmission/hydraulic fluid. The recommended replacement fluid is as follows:

Toro Premium Transmission/Hydraulic Tractor Fluid
(Available in 5 gallon pails or 55 gallon drums. See parts catalog or Toro distributor for part numbers.)

Alternate fluids: If the Toro fluid is not available, Mobil® 424 hydraulic fluid may be used.

Note: Toro will not assume responsibility for damage caused by improper substitutions.

Note: Many hydraulic fluids are almost colorless, making it difficult to spot leaks. A red dye additive for the hydraulic system fluid is available in 20 ml (2/3 fl oz) bottles. One bottle is sufficient for 15 to 22 L (4 to 6 gallons) of hydraulic fluid. Order part number 44-2500 from your Authorized Toro Distributor.

Hydraulic System Safety

- **Ensure that all hydraulic-fluid hoses and lines are in good condition and all hydraulic connections and fittings are tight before applying pressure to the hydraulic system.**
- **Keep your body and hands away from pinhole leaks or nozzles that eject high-pressure hydraulic fluid.**
- **Use cardboard or paper to find hydraulic leaks.**
- **Safely relieve all pressure in the hydraulic system before performing any work on the hydraulic system.**
- **Seek immediate medical attention if fluid is injected into skin. Injected fluid must be surgically removed within a few hours by a doctor.**

Checking the Hydraulic System

Service Interval: Before each use or daily

Check the level of the hydraulic fluid before you first start the engine and daily thereafter.

1. Position the machine on a level surface.
2. Move the motion-control levers to the NEUTRAL-LOCK position and start the engine.

   Note: Run the engine at the lowest possible rpm to purge the system of air.

   Important: Do not engage the PTO.
3. Raise the deck to extend the lift cylinders, shut off the engine, and remove the key.
4. Raise the seat to access the hydraulic fluid tank.
5. Remove the hydraulic fill cap from the filler neck (Figure 61).

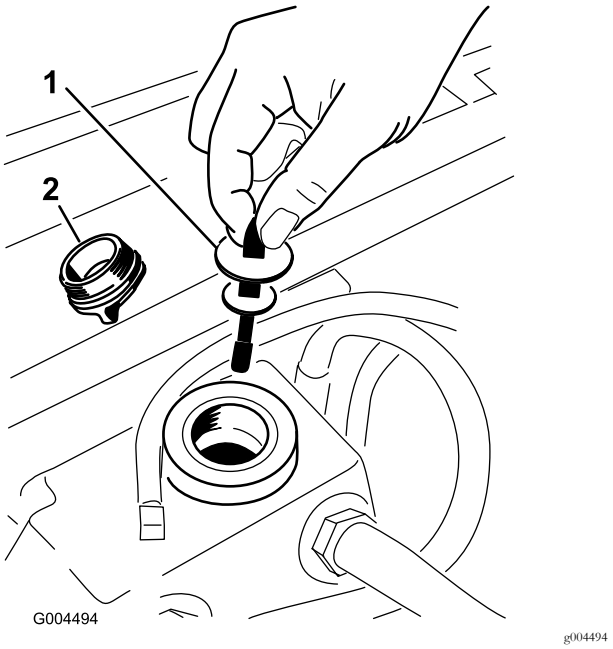

Figure 61

1. Dipstick
2. Fill cap

6. Remove the dipstick and wipe it with a clean rag (Figure 61).
7. Place the dipstick into the filler neck; then remove it and check the level of fluid (Figure 61).

   Note: If the level is not within the notched area of the dipstick, add enough high-quality hydraulic fluid to raise the level to within the notched area.

   Important: Do not overfill.
8. Replace the dipstick and thread the fill cap finger-tight onto the filler neck.
9. Check all hoses and fittings for leaks.

Changing the Hydraulic Fluid And Filter

Service Interval: After the first 200 hours

Every 800 hours

1. Disengage the PTO, move the motion-control levers to the NEUTRAL-LOCK position, and engage the parking brake.
2. Move the throttle lever to the SLOW position, shut off the engine, remove the key, and wait for all moving parts to stop before leaving the operating position.
3. Place a large pan under the hydraulic reservoir and transmission case and remove the plugs, draining all of the hydraulic fluid (Figure 62).

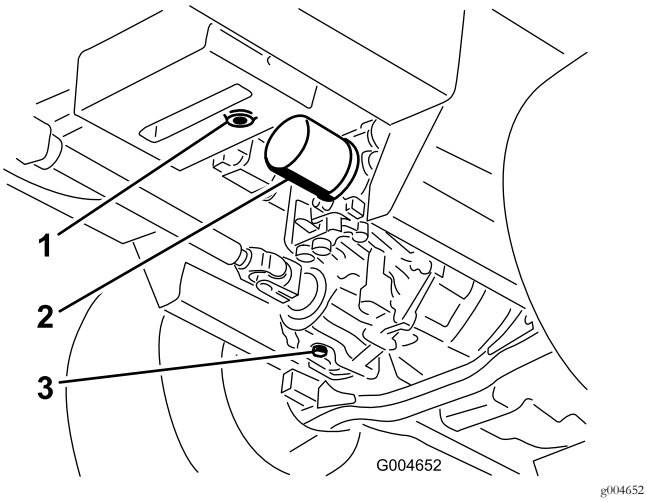

Figure 62

1. Hydraulic-reservoir drain plug
2. Filter
3. Transmission-case drain plug

4. Clean the area around the hydraulic fluid filter and remove the filter (Figure 62).
5. Immediately install a new hydraulic fluid filter.
6. Install the hydraulic-reservoir and transmission-case drain plugs.
7. Fill the reservoir to the proper level (approximately 5.7 L or 6 US qt); refer to Checking the Hydraulic System (page 51).
8. Start the engine and check for oil leaks. Allow the engine to run for about 5 minutes, then shut it off.
9. After 2 minutes, check the level of the hydraulic fluid; refer to Checking the Hydraulic System (page 51).

Cleaning

Cleaning Under the Mower

Service Interval: Before each use or daily

1. Disengage the PTO, move the motion-control levers to the NEUTRAL-LOCK position, and engage the parking brake.
2. Move the throttle lever to the SLOW position, shut off the engine, remove the key, and wait for all moving parts to stop before leaving the operating position.
3. Raise the mower to the transport position.
4. Raise the front of the machine using jack stands.
5. Thoroughly clean the underside of the mower with water.

Disposing of Waste

Engine oil, batteries, hydraulic fluid, and engine coolant are pollutants. Dispose of these according to your state and local regulations.

Storage

Machine

1. Thoroughly clean the machine, deck, and engine, paying special attention to these areas:
   - Radiator and radiator screen
   - Underneath the deck
   - Under the deck belt covers
   - Counterbalance springs
   - PTO-shaft assembly
   - All grease fittings and pivot points
   - Inside the control box
   - Beneath the seat plate and top of the transmission
2. Check and adjust front and rear tire pressure; refer to Checking the Tire Pressure (page 42).
3. Remove, sharpen, and balance the mower blades. Install the blades and torque the blade fasteners to 115 to 149 N·m (85 to 110 ft-lb).
4. Check all fasteners for looseness and tighten them as necessary. Torque the 6 bolts securing the mower deck frame to the traction unit (Figure 63) to 359 N·m (265 ft-lb).

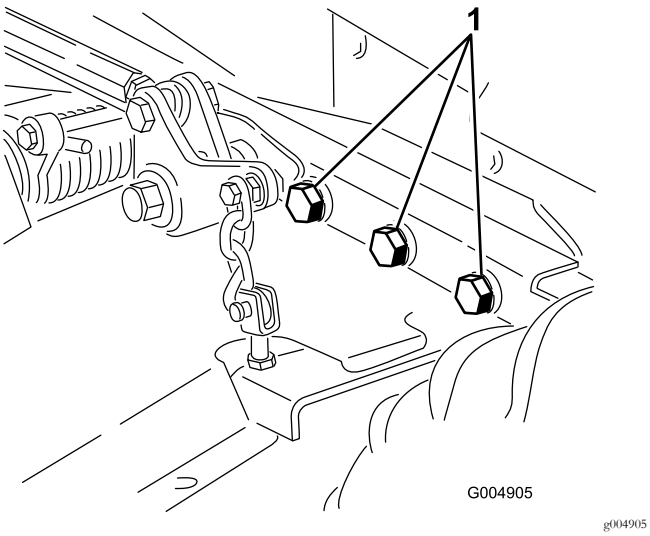

Figure 63
Right side not shown.

1. Bolts

5. Grease or oil all grease fittings, pivot points, and transmission-bypass-valve pins. Wipe off any excess lubricant.
6. Lightly sand and use touch up paint on painted areas that are scratched, chipped or rusted. Repair any dents in the metal body.
7. Service the battery and cables as follows:
   A. Remove the battery terminals from the battery posts.
   B. Clean the battery, terminals, and posts with a wire brush and baking soda solution.
   C. Coat the cable terminals and battery posts with Grafo 112X skin-over grease (Toro Part No. 505-47) or petroleum jelly to prevent corrosion.
   D. Slowly recharge the battery for 24 hours every 60 days to prevent lead sulfation of the battery.

Engine

1. Drain the engine oil from the oil pan and replace the drain plug.
2. Replace the oil filter.
3. Fill the engine with the recommended motor oil.
4. Start the engine and run it at idle speed for 2 minutes.
5. Drain the fuel from the fuel tank, fuel lines, pump, filter, and separator. Flush the fuel tank with clean diesel fuel and connect all fuel lines.
6. Thoroughly clean and service the air-cleaner assembly.
7. Seal the air-cleaner inlet and the exhaust outlet with weather proof masking tape.
8. Check the oil filler cap and fuel-tank cap to ensure that they are securely in place.

Notes:

European Privacy Notice

The Information Toro Collects
Toro Warranty Company (Toro) respects your privacy. In order to process your warranty claim and contact you in the event of a product recall, we ask you to share certain personal information with us, either directly or through your local Toro company or dealer.

The Toro warranty system is hosted on servers located within the United States where privacy law may not provide the same protection as applies in your country.

BY SHARING YOUR PERSONAL INFORMATION WITH US, YOU ARE CONSENTING TO THE PROCESSING OF YOUR PERSONAL INFORMATION AS DESCRIBED IN THIS PRIVACY NOTICE.

The Way Toro Uses Information
Toro may use your personal information to process warranty claims, to contact you in the event of a product recall and for any other purpose which we tell you about. Toro may share your information with Toro's affiliates, dealers or other business partners in connection with any of these activities. We will not sell your personal information to any other company. We reserve the right to disclose personal information in order to comply with applicable laws and with requests by the appropriate authorities, to operate our systems properly or for our own protection or that of other users.

Retention of your Personal Information
We will keep your personal information as long as we need it for the purposes for which it was originally collected or for other legitimate purposes (such as regulatory compliance), or as required by applicable law.

Toro's Commitment to Security of Your Personal Information
We take reasonable precautions in order to protect the security of your personal information. We also take steps to maintain the accuracy and current status of personal information.

Access and Correction of your Personal Information
If you would like to review or correct your personal information, please contact us by email at legal@toro.com.

Australian Consumer Law

Australian customers will find details relating to the Australian Consumer Law either inside the box or at your local Toro Dealer.

The Toro Warranty

A Two-Year Limited Warranty

Conditions and Products Covered

The Toro Company and its affiliate, Toro Warranty Company, pursuant to an agreement between them, jointly warrant your Toro Commercial product ("Product") to be free from defects in materials or workmanship for two years or 1500 operational hours*, whichever occurs first. This warranty is applicable to all products with the exception of Aerators (refer to separate warranty statements for these products). Where a warrantable condition exists, we will repair the Product at no cost to you including diagnostics, labor, parts, and transportation. This warranty begins on the date the Product is delivered to the original retail purchaser.
* Product equipped with an hour meter.

Instructions for Obtaining Warranty Service

You are responsible for notifying the Commercial Products Distributor or Authorized Commercial Products Dealer from whom you purchased the Product as soon as you believe a warrantable condition exists. If you need help locating a Commercial Products Distributor or Authorized Dealer, or if you have questions regarding your warranty rights or responsibilities, you may contact us at:

Toro Commercial Products Service Department
Toro Warranty Company
8111 Lyndale Avenue South
Bloomington, MN 55420-1196

952–888–8801 or 800–952–2740
E-mail: commercial.warranty@toro.com

Owner Responsibilities

As the Product owner, you are responsible for required maintenance and adjustments stated in your *Operator's Manual*. Failure to perform required maintenance and adjustments can be grounds for disallowing a warranty claim.

Items and Conditions Not Covered

Not all product failures or malfunctions that occur during the warranty period are defects in materials or workmanship. This warranty does not cover the following:

- Product failures which result from the use of non-Toro replacement parts, or from installation and use of add-on, or modified non-Toro branded accessories and products. A separate warranty may be provided by the manufacturer of these items.
- Product failures which result from failure to perform recommended maintenance and/or adjustments. Failure to properly maintain your Toro product per the Recommended Maintenance listed in the *Operator's Manual* can result in claims for warranty being denied.
- Product failures which result from operating the Product in an abusive, negligent, or reckless manner.
- Parts subject to consumption through use unless found to be defective. Examples of parts which are consumed, or used up, during normal Product operation include, but are not limited to, brake pads and linings, clutch linings, blades, reels, rollers and bearings (sealed or greasable), bed knives, spark plugs, castor wheels and bearings, tires, filters, belts, and certain sprayer components such as diaphragms, nozzles, and check valves, etc.
- Failures caused by outside influence. Conditions considered to be outside influence include, but are not limited to, weather, storage practices, contamination, use of unapproved fuels, coolants, lubricants, additives, fertilizers, water, or chemicals, etc.
- Failure or performance issues due to the use of fuels (e.g. gasoline, diesel, or biodiesel) that do not conform to their respective industry standards.
- Normal noise, vibration, wear and tear, and deterioration.
- Normal "wear and tear" includes, but is not limited to, damage to seats due to wear or abrasion, worn painted surfaces, scratched decals or windows, etc.

Parts

Parts scheduled for replacement as required maintenance are warranted for the period of time up to the scheduled replacement time for that part. Parts replaced under this warranty are covered for the duration of the original product warranty and become the property of Toro. Toro will make the final decision whether to repair any existing part or assembly or replace it. Toro may use remanufactured parts for warranty repairs.

Deep Cycle and Lithium-Ion Battery Warranty:

Deep cycle and Lithium-Ion batteries have a specified total number of kilowatt-hours they can deliver during their lifetime. Operating, recharging, and maintenance techniques can extend or reduce total battery life. As the batteries in this product are consumed, the amount of useful work between charging intervals will slowly decrease until the battery is completely worn out. Replacement of worn out batteries, due to normal consumption, is the responsibility of the product owner. Battery replacement may be required during the normal product warranty period at owner's expense. Note: (Lithium-Ion battery only): A Lithium-Ion battery has a part only prorated warranty beginning year 3 through year 5 based on the time in service and kilowatt hours used. Refer to the *Operator's Manual* for additional information.

Maintenance is at Owner's Expense

Engine tune-up, lubrication, cleaning and polishing, replacement of filters, coolant, and completing recommended maintenance are some of the normal services Toro products require that are at the owner's expense.

General Conditions

Repair by an Authorized Toro Distributor or Dealer is your sole remedy under this warranty.

Neither The Toro Company nor Toro Warranty Company is liable for indirect, incidental or consequential damages in connection with the use of the Toro Products covered by this warranty, including any cost or expense of providing substitute equipment or service during reasonable periods of malfunction or non-use pending completion of repairs under this warranty. Except for the Emissions warranty referenced below, if applicable, there is no other express warranty. All implied warranties of merchantability and fitness for use are limited to the duration of this express warranty.

Some states do not allow exclusions of incidental or consequential damages, or limitations on how long an implied warranty lasts, so the above exclusions and limitations may not apply to you. This warranty gives you specific legal rights, and you may also have other rights which vary from state to state.

Note regarding engine warranty:

The Emissions Control System on your Product may be covered by a separate warranty meeting requirements established by the U.S. Environmental Protection Agency (EPA) and/or the California Air Resources Board (CARB). The hour limitations set forth above do not apply to the Emissions Control System Warranty. Refer to the Engine Emission Control Warranty Statement supplied with your product or contained in the engine manufacturer's documentation for details

Countries Other than the United States or Canada

Customers who have purchased Toro products exported from the United States or Canada should contact their Toro Distributor (Dealer) to obtain guarantee policies for your country, province, or state. If for any reason you are dissatisfied with your Distributor's service or have difficulty obtaining guarantee information, contact the Toro importer.

374-0253 Rev D