Form No. 3409-730 Rev A

TORO®

Count on it.

Operator's Manual

Greensmaster® 800, 1000, or 1600 Mower

Model No. 04054—Serial No. 400000000 and Up
Model No. 04055—Serial No. 400000000 and Up
Model No. 04056—Serial No. 400000000 and Up

Register at www.Toro.com.
Original Instructions (EN)

CE

3409-730 A

This product complies with all relevant European directives; for details, please see the separate product specific Declaration of Conformity (DOC) sheet.

⚠ WARNING

CALIFORNIA
Proposition 65 Warning

This product contains a chemical or chemicals known to the State of California to cause cancer, birth defects, or reproductive harm.

The engine exhaust from this product contains chemicals known to the State of California to cause cancer, birth defects, or other reproductive harm.

It is a violation of California Public Resource Code Section 4442 or 4443 to use or operate the engine on any forest-covered, brush-covered, or grass-covered land unless the engine is equipped with a spark arrester, as defined in Section 4442, maintained in effective working order or the engine is constructed, equipped, and maintained for the prevention of fire.

This spark ignition system complies with Canadian ICES-002.

Operating this machine between 5,000 to 8,000 ft above sea level requires the high-altitude kit. See your Authorized Toro Dealer.

Model No. _____

Serial No. _____

This manual identifies potential hazards and has safety messages identified by the safety-alert symbol (Figure 1), which signals a hazard that may cause serious injury or death if you do not follow the recommended precautions.



g000502

Figure 1

1. Safety-alert symbol

This manual uses 2 words to highlight information. **Important** calls attention to special mechanical information and **Note** emphasizes general information worthy of special attention.

Introduction

This machine is a walk behind, reel-blade lawn mower intended to be used by professional, hired operators in commercial applications. It is primarily designed for cutting grass on well-maintained lawns in parks, golf courses, sports fields, and on commercial grounds. It is not designed for cutting brush, mowing grass and other growth alongside highways, or for agricultural uses.

Read this information carefully to learn how to operate and maintain your product properly and to avoid injury and product damage. You are responsible for operating the product properly and safely.

You may contact Toro directly at www.Toro.com for product and accessory information, help finding a dealer, or to register your product.

Whenever you need service, genuine Toro parts, or additional information, contact an Authorized Service Dealer or Toro Customer Service and have the model and serial numbers of your product ready. The model and serial numbers are located on a plate on the rear frame. Write the numbers in the space provided.

© 2016—The Toro® Company

All Rights Reserved

Contents

Safety 4
General Safety 4
Preparation 4
Operation 4
Maintenance and Storage 4
Hauling 5
Toro Mower Safety 5
Safety and Instructional Decals 6
Setup 8
1 Installing and Adjusting the Handle 9
2 Installing the Kickstand (Models 04054 and 04056) 10
3 Installing the Transport Wheel Shafts (Models 04055 and 04056) 10
4 Installing the Transport Wheels (Optional) 11
5 Adjusting the Cutting Unit 11
6 Installing the Grass Basket 11
Product Overview 12
Controls 12
Specifications 14
Attachments/Accessories 14
Operation 15
Think Safety First 15
Checking the Engine-Oil Level 15
Filling the Fuel Tank 15
Breaking-in the Machine 16
Checking the Interlock Switch Operation 16
Starting and Shutting Off the Engine 17
Transporting the Machine 17
Preparing to Mow 17
Mowing 17
Operating Tips 18
Maintenance 19
Recommended Maintenance Schedule(s) 19
Daily Maintenance Checklist 20
Lubrication 21
Greasing the Machine 21
Engine Maintenance 22
Servicing the Engine Oil 22
Servicing the Air Cleaner 23
Replacing the Spark Plug 24
Fuel System Maintenance 24
Cleaning the Fuel Filter 24
Electrical System Maintenance 25
Servicing the Interlock Switch 25
Brake Maintenance 25
Adjusting the Service/Parking Brake 25
Belt Maintenance 27
Adjusting the Belts 27
Replacing the Differential Belt 29
Controls System Maintenance 30
Adjusting the Traction Control 30
Cutting Unit Maintenance 31
Leveling the Rear Drum to the Reel 31
Adjusting the Bedknife to the Reel 31
Adjusting the Height of Cut 32
Adjusting the Grass Shield Height 33
Adjusting the Cut-off Bar 33
Bedbar Identification 34
Setting the Machine to Match Turf Conditions 35
Servicing the Bedbar 36
Backlapping the Reel 37
Storage 38

Safety

This machine has been designed in accordance with CEN standard EN ISO 5395:2013 and ANSI B71.4-2012 specifications in effect at the time of production when the Operator Presence Kit, Part No. 112-9282 is installed.

General Safety

This product is capable of amputating hands and feet and of throwing objects. Always follow all safety instructions to avoid serious personal injury.

Using this product for purposes other than its intended use could prove dangerous to you and bystanders.

- Read and understand the contents of this *Operator's Manual* before starting the engine.
- Do not put your hands or feet near moving components of the machine.
- Do not operate the machine without all guards and other safety protective devices in place and working on the machine.
- Keep clear of any discharge opening. Keep bystanders and pets a safe distance away from the machine.
- Keep children out of the operating area. Never allow children to operate the machine.
- Stop the machine and shut off the engine before servicing, fueling, or unclogging the machine.

Improperly using or maintaining this machine can result in injury. To reduce the potential for injury, comply with these safety instructions and always pay attention to the safety-alert symbol, which means Caution, Warning, or Danger—personal safety instruction. Failure to comply with these instructions may result in personal injury or death.

Preparation

- Wear appropriate clothing, including eye protection; slip-resistant, substantial footwear; and hearing protection. Tie back long hair, secure loose clothing, and do not wear jewelry.
- Inspect the area where you will use the machine and remove all objects that the machine could throw.
- Replace faulty silencers.
- Evaluate the terrain to determine what accessories and attachments are needed to properly and safely perform the job.
- Use accessories and attachments approved by the The Toro® Company only.
- Check that operator's presence controls, safety switches, and shields are attached and functioning properly.

Operation

- Do not operate the engine in a confined space where dangerous carbon monoxide and other exhaust gasses can collect.
- Operate the machine only in good visibility and appropriate weather conditions. Do not operate the machine when there is the risk of lightning.
- Before attempting to start the engine, disengage all blade attachment clutches, shift into neutral, and engage the parking brake.
- Watch for holes, ruts, bumps, rocks, or other hidden objects. Uneven terrain could cause a slip-and-fall accident.
- Do not tip the machine more than 45 degrees.
- Watch out for traffic when crossing or near roadways.
- Stop the blades rotating before crossing surfaces other than grass.
- Do not change the engine governor settings or overspeed the engine. Operating the engine at excessive speed may increase the hazard of personal injury.
- Shut off the engine and disengage the drive to the attachment:
  - Before leaving the operator's position
  - Before refuelling
  - Before removing the grass basket
  - Before making height adjustment unless adjustment can be made from the operator's position
  - Before clearing blockages
  - Before checking, cleaning, or working on the mower
  - After striking a foreign object or if an abnormal vibration occurs. Inspect the mower for damage and make repairs before restarting and operating the equipment.

  Disengage drive to attachments when transporting or not in use.
- Reduce the throttle setting before shutting off the engine and, if the engine is provided with a fuel shut-off valve, turn the valve off at the conclusion of mowing.
- Slow down and use caution when making turns and crossing roads and sidewalks. Stop the reels when not mowing.
- Do not operate the mower if you are ill, tired, or under the influence of alcohol or drugs
- Use extreme care when approaching blind corners, shrubs, trees, or other objects that may block your view.

Maintenance and Storage

- Keep all nuts, bolts, and screws tight to be sure the equipment is in safe working condition.
- Never store the machine or fuel container where there is an open flame, spark, or pilot light, such as on a water heater or on other appliances.

- Allow the engine to cool before storing the machine in any enclosure.
- Check the grass catcher components frequently and replace them with the manufacturer's recommended parts when necessary.
- Keep all parts in good working condition and all hardware and hydraulic fittings tightened. Replace all worn or damaged parts and decals.
- If the fuel tank has to be drained, do this outdoors.
- Be careful during adjustment of the machine to prevent entrapment of the fingers between moving blades and fixed parts of the machine.
- Disengage drives, disengage the cutting unit, set the parking brake, shut off the engine, and disconnect the spark plug wire. Wait for all movement to stop before adjusting, cleaning, or repairing.
- Clean grass and debris from the cutting unit, drives, mufflers, cooling screens, and the engine to help prevent fires. Clean up oil or fuel spillage.
- Carefully release pressure from components with stored energy.
- Disconnect the battery and remove the spark plug wire before making any repairs. Disconnect the negative terminal first and the positive last. Reconnect the positive first and negative last.
- Use care when checking the reel. Wear gloves and use caution when servicing them.

Hauling

- Use care when loading or unloading the machine.
- Secure the machine from rolling.

Toro Mower Safety

- Know how to shut off the engine quickly.
- Handle fuel carefully. Wipe up any spills.
- Always stand behind the handle when starting and operating the machine.
- When near or crossing roads, always yield the right-of-way.
- The grass basket must be in place, during the mowing operation, for maximum safety. Shut the engine off before emptying the basket.
- Do not touch the engine, muffler, or exhaust pipe while the engine is running or soon after it has shut off because these areas could be hot enough to cause burns.

Maintenance and Storage

- Check all fuel lines for tightness and wear on a regular basis. Tighten or repair them as needed.
- If the engine must be running to perform a maintenance adjustment, keep hands, feet, clothing, and any parts of the body away from the cutting unit, attachments and any moving parts. Keep everyone away.
- To ensure safety and accuracy, have an Authorized Toro Distributor check the maximum engine speed with a tachometer. The maximum governed engine speed should be between 3,190 and 3,340 rpm.
- If major repairs are ever needed or if assistance is desired, contact an Authorized Toro Distributor.
- To ensure optimum performance and continued safety certification of the machine, use only genuine Toro replacement parts and accessories. Replacement parts and accessories made by other manufacturers could be dangerous, and such use could void the product warranty.

Safety and Instructional Decals

Safety decals and instructions are easily visible to the operator and are located near any area of potential danger. Replace any decal that is damaged or missing.

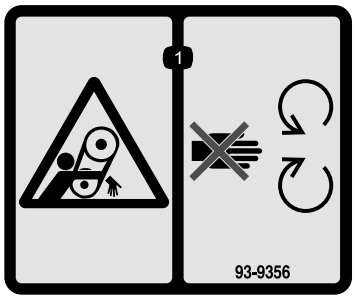

decal93-9356

93-9356

1. Entanglement hazard—stay away from moving parts.

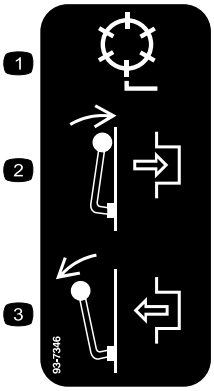

decal93-7346

93-7346

1. Reel drive
2. Engage
3. Disengage

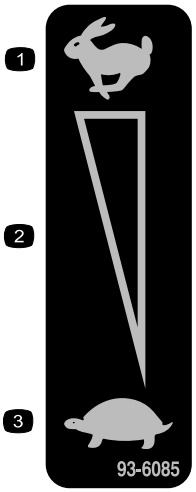

decal93-6085

93-6085

1. Fast
2. Continuous variable setting
3. Slow

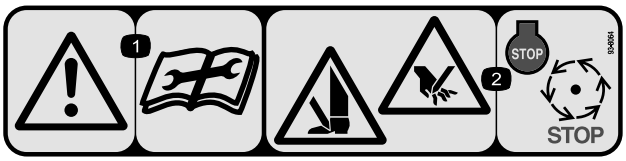

decal93-8064

93-8064

1. Warning—read the instructions before servicing or performing maintenance.
2. Cutting hazard of foot or hand—shut off the engine and wait for moving parts to stop.

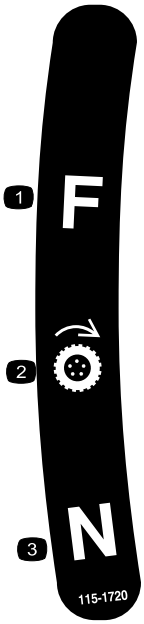

decal115-1720

115-1720

1. Forward
2. Drive wheel
3. Neutral

CALIFORNIA SPARK ARRESTER WARNING
Operation of this equipment may create sparks that can start fires around dry vegetation. A spark arrester may be required. The operator should contact local fire agencies for laws or regulations relating to fire prevention requirements. 117-2718

decal117-2718

117–2718

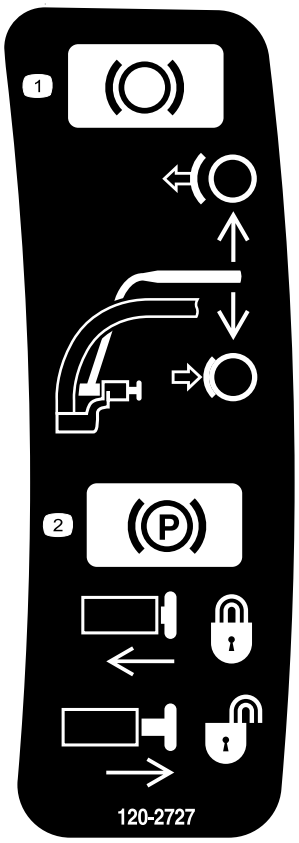

decal120-2727

120-2727

1. Brake—to engage, pull the lever toward the handle; to disengage, release the lever.
2. Parking brake—to lock, pull the lever toward the handle, press the button in and release the lever against the locking button; to release, pull the lever toward the handle until the button releases and release the lever.

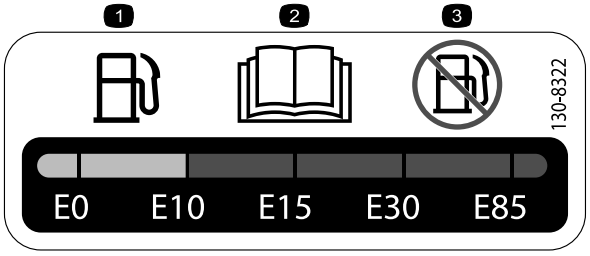

decal130-8322

130-8322

1. Only use gasoline that contains 10% ethanol by volume (E10) or less.
2. Read the *Operator's Manual*.
3. Do not use gasoline that contains more than 10% ethanol by volume (E10).

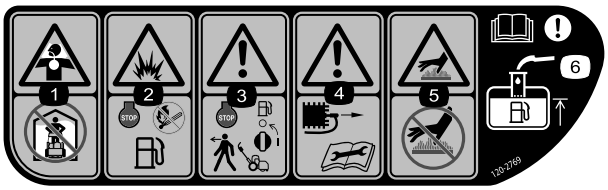

decal120-2769

120–2769

1. Toxic gas inhalation hazard—do not operate indoors.
2. Explosion hazard—shut off the engine and keep away from open flames when refueling.
3. Warning—shut off the engine and turn off the fuel before leaving the machine.
4. Warning—disconnect the spark plug wire and read the instruction before servicing or performing maintenance.
5. Hot surface/burn hazard—do not touch hot surfaces.
6. Warning—read the *Operator's Manual*; when adding fuel to the tank, only fill to the bottom of the fill tube.

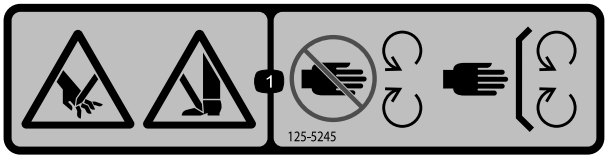

decal125-5245

125–5245

1. Cutting hazard of hand or foot—keep away from moving parts; keep all guards and shields in place.



decal120-2761

120–2761

1. Warning—read the *Operator's Manual*.
2. Warning—do not operate the machine unless they are trained.
3. Warning—wear hearing protection.
4. Thrown object hazard—keep bystanders away from the machine.
5. Warning—keep away from moving parts; keep all guards in place.

Setup

Loose Parts

Use the chart below to verify that all parts have been shipped.

Procedure	Description	Qty.	Use
1	Handle Cable tie	1 4	Install the handle.
2	Kickstand assembly Spring	1 1	Install the kickstand.
3	Right wheel shaft Left wheel shaft	1 1	Install the transport wheel shafts.
4	Transport wheel (optional)	2	Install the transport wheels (optional).
5	No parts required	–	Adjust the cutting unit.
6	Grass basket	1	Install the grass basket.

Media and Additional Parts

Description	Qty.	Use
Operator's Manual Engine operator's manual Parts Catalog Operator training material Certificate of Compliance	1 1 1 1 1	Read or view the items before operating the machine.

Note: Determine the left and right sides of the machine from the normal operating position.

1

Installing and Adjusting the Handle

Parts needed for this procedure:

1	Handle
4	Cable tie

Installing the Handle

1. Remove the bolts, locknuts, and washers securing the bottom of the handle arms to each side of the machine (Figure 2).

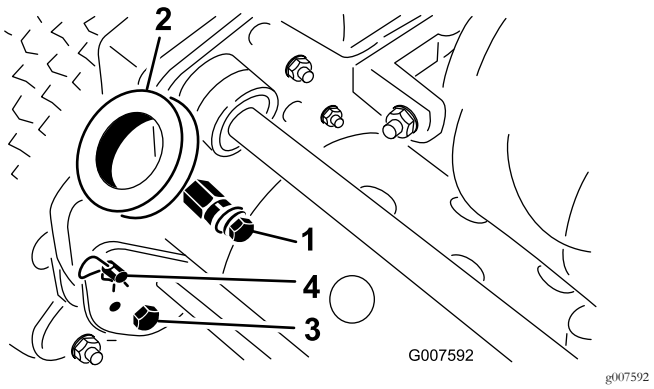

Figure 2

1. Mounting pins
2. Handle arms
3. Bolt and locknut
4. Hairpin cotter and ring pin

2. Remove the hairpin cotters and the ring pins securing the handle arms to the rear of the frame (Figure 2).
3. Insert the handle ends through the holes in the handle arms and align the holes with the mounting pins (Figure 2).
4. Squeeze the handle ends inward and install them on the mounting pins (Figure 3).

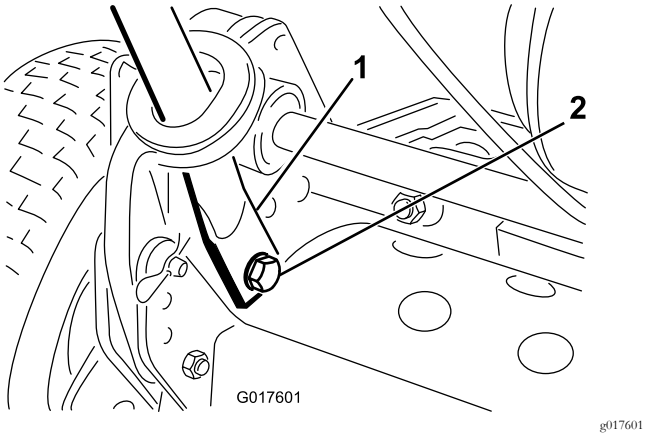

Figure 3

1. Handle end
2. Bolt, washer, and lock washer

5. Secure the handle ends to the mounting pins with the bolts, washers, and lock washers previously removed (Figure 3).
6. Secure the handle arms to the rear of the frame with the hairpin cotters and the ring pins previously removed (Figure 3).
7. Secure the cables and the wiring harness to the handle with the cable ties (Figure 4).

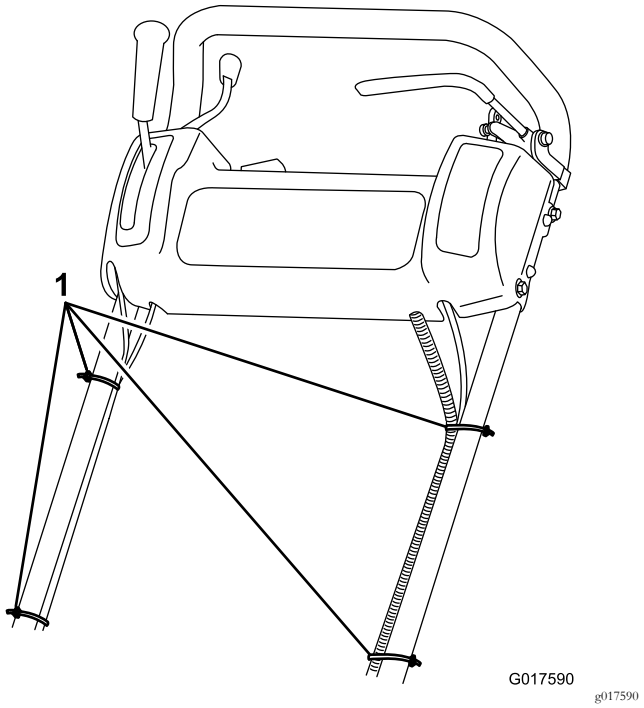

Figure 4

1. Cable ties

Adjusting the Handle

1. Remove the hairpin cotters from the ring pins on each side of the machine (Figure 2).
2. While supporting the handle, remove the ring pins from each side and raise or lower the handle to the desired operating position (Figure 2).
3. Install the ring pins and hairpin cotters.

2

Installing the Kickstand (Models 04054 and 04056)

Parts needed for this procedure:

1	Kickstand assembly
1	Spring

Procedure

Note: The fasteners are shipped loosely installed on the kickstand assembly.

1. **On Model 04056 only**, connect the spring stud to the right-hand side of the kickstand (Figure 5) using the bolt, washer, and flange nut provided.

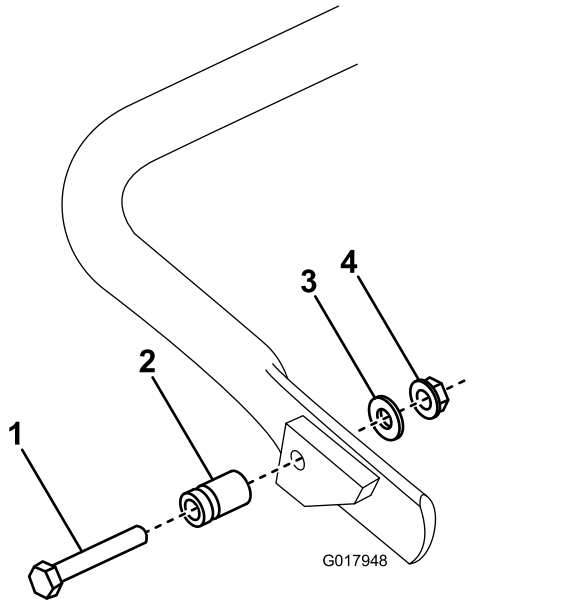

Figure 5

1. Bolt
2. Spring stud
3. Washer
4. Flange nut

2. Hook the spring into the hole in the spring bracket and onto the spring stud while aligning the kickstand with the mounting holes in the rear frame (Figure 6).

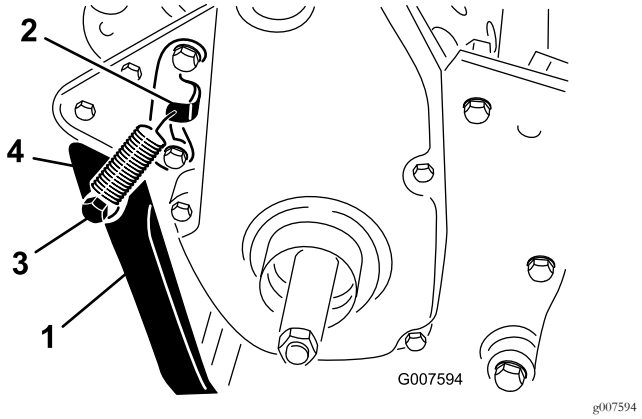

Figure 6

1. Kickstand
2. Spring bracket
3. Spring stud
4. Spring

3. Mount the kickstand to each side of the frame with a bolt, spacer, flat washer, and locknut (Figure 6).

   Note: Position the spacer in the kickstand mounting hole.

3

Installing the Transport Wheel Shafts (Models 04055 and 04056)

Parts needed for this procedure:

1	Right wheel shaft
1	Left wheel shaft

Procedure

1. Push the kickstand down with your foot and pull up the handle to support the machine on the kickstand.
2. Apply thread-locking adhesive to the threads of the wheel shafts.
3. Thread the right wheel shaft into the drive pulley on the right side of the machine (Figure 7).

   Note: The right wheel shaft has left-hand threads.

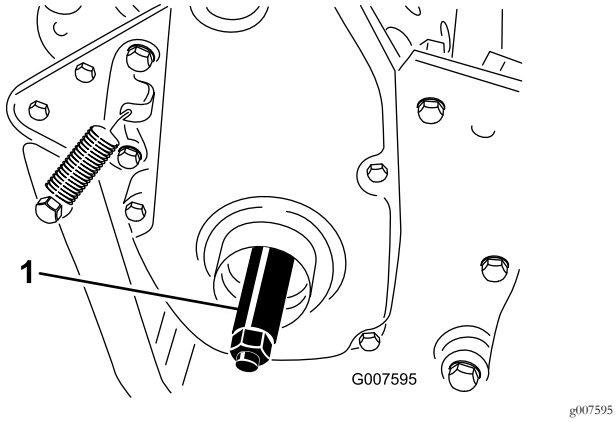

Figure 7

1. Right wheel shaft

4. Torque the shaft to 88 to 101 N·m (65 to 75 ft-lb).
5. Repeat the procedure on the left side.

4

Installing the Transport Wheels (Optional)

Parts needed for this procedure:

2	Transport wheel (optional)

Procedure

1. Slide the wheel onto the axle (Figure 8).
2. Pivot the wheel locking clip away from center of the wheel allowing it to slide farther onto the axle (Figure 8).

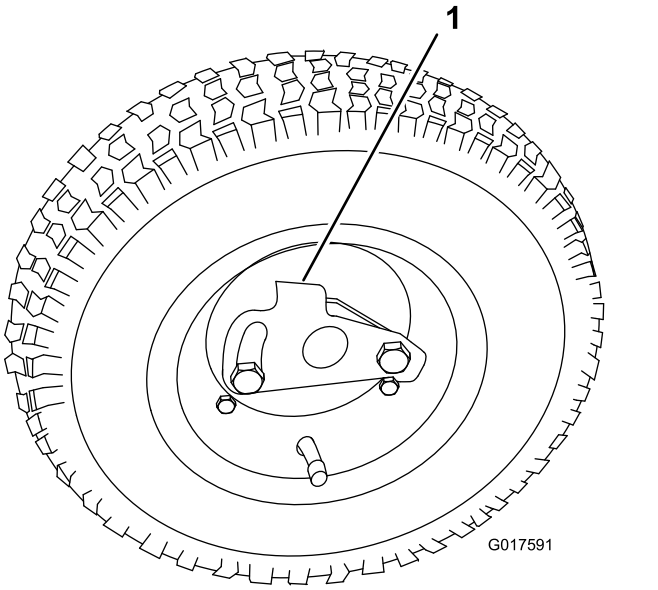

Figure 8

1. Locking clip

3. Rotate the wheel back and forth until it slides completely onto the axle and the locking clip is secured in the groove on the axle shaft.
4. Repeat the procedure on the opposite side of the machine.
5. Inflate the tires to 83 to 103 kPa (12 to 15 psi).

5

Adjusting the Cutting Unit

No Parts Required

Procedure

Before operating the machine, complete the following adjustments:

- Leveling the Rear Drum to the Reel (page 31)
- Adjusting the Bedknife to the Reel (page 31)
- Adjusting the Height of Cut (page 32)
- Adjusting the Grass Shield Height (page 33)
- Adjusting the Cut-off Bar (page 33)

6

Installing the Grass Basket

Parts needed for this procedure:

1	Grass basket

Procedure

Grasp the basket by the top lip and slide it onto the basket mounting rods (Figure 9).

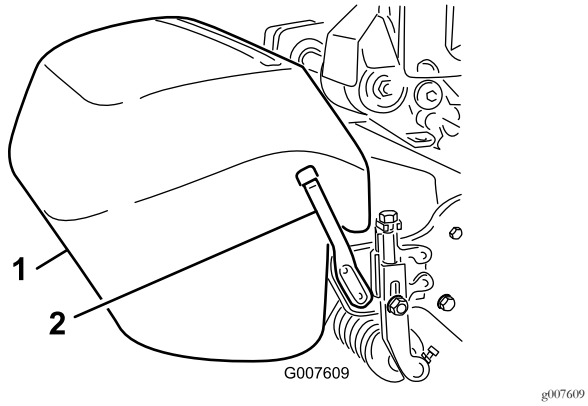

Figure 9

1. Grass basket
2. Basket mounting rod

Note: Model 04056 only—When cutting in higher heights of cut, you can lower the basket by removing each basket mounting rod and installing each on the opposite side of the machine.

Product Overview

Controls

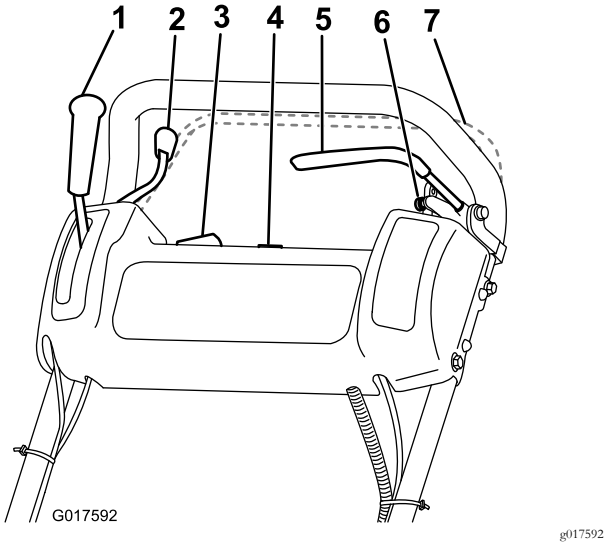

Figure 10

1. Traction-drive lever
2. Throttle control
3. On/off switch
4. Hour meter
5. Service brake
6. Parking brake
7. Operator-presence control (optional)

Throttle Control

The throttle control (Figure 10) is located on the rear, right side of the control panel. The lever connects to and operates the throttle linkage to the carburetor. Refer to Specifications (page 14) for the engine speed.

Traction-Drive Lever

The traction-drive lever (Figure 10) is located on the front right side of the control panel. It has 2 positions: NEUTRAL and FORWARD. Pushing the lever forward engages the traction drive.

Service Brake

The service brake (Figure 11) is located on the top left, front side of the control panel. You can use the brake to slow or stop the machine.

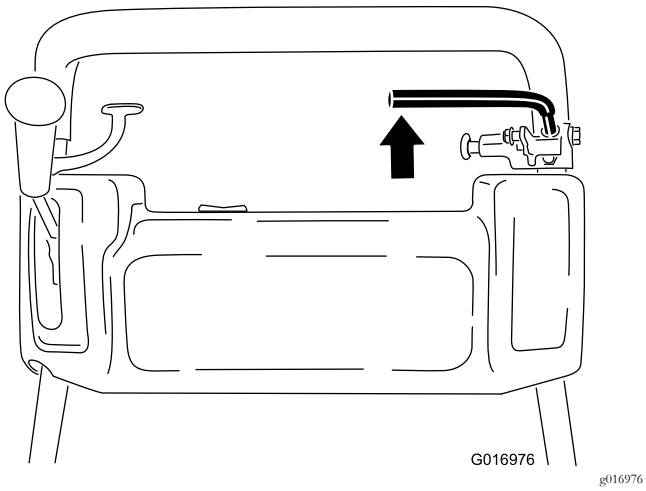

Figure 11

Parking Brake

The parking brake (Figure 12) is located at the base of the service brake. Fully engage the service brake and push the parking-brake knob to allow the service brake to rest on the parking-brake pin. Engage the service brake to release the parking brake. You must release the brake before you engage the traction drive.

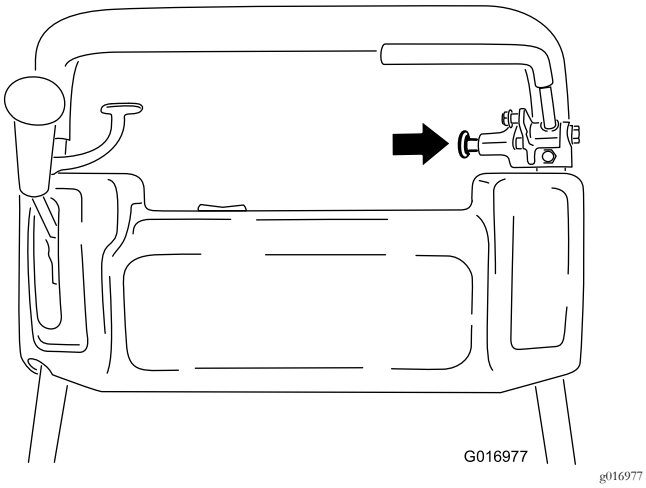

Figure 12

On/Off Switch

The on/off switch (Figure 10) is located on the top of the control panel. Move the switch to the ON position to start the engine and the OFF position to shut off the engine.

Operator Presence Control (Optional)

If equipped, the operator presence control (Figure 10) is located on the rear of the handle. Push the operator presence control against the handle. If equipped, the operator presence control must be engaged before moving the traction-drive lever or the engine shuts off.

Reel-Drive Lever

The reel-drive lever (Figure 13) is located on the right front corner of the machine. The lever has 2 positions: ENGAGE and DISENGAGE. Move the lever to the right to engage the reel or to the left to disengage the reel.

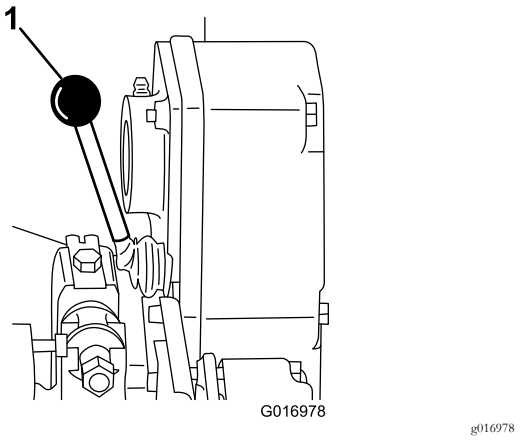

Figure 13

1. Reel-drive lever

Choke Lever

The choke lever (Figure 14) is located on the left front of the engine. The lever has 2 positions: RUN and CHOKE. Move the lever to the CHOKE position when starting a cold engine. After the engine starts, move the lever to the RUN position.

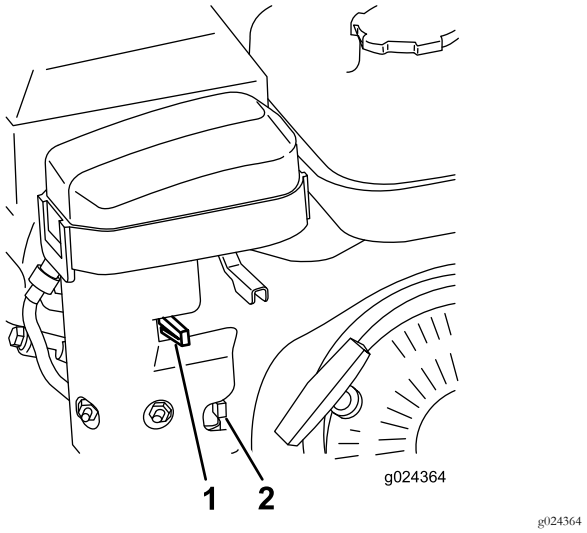

Figure 14

1. Choke lever
2. Fuel-shut off valve

Fuel-Shutoff Valve

The fuel shutoff valve (Figure 14) is located on the left front of the engine near the choke lever. The valve has 2 positions: CLOSED and OPEN. Move the lever up to the closed position when storing or transporting the machine. Open the valve before starting the engine by rotating the lever down.

Recoil-Start Handle

Pull the recoil-start handle (Figure 15) to start the engine.

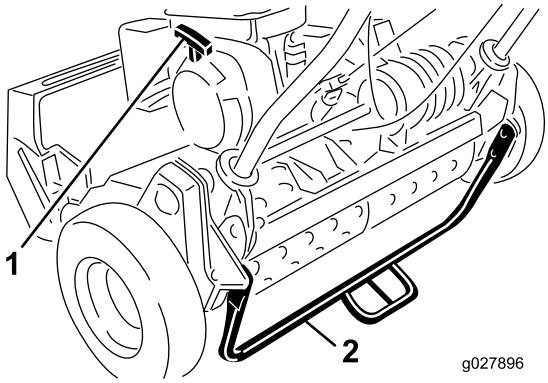

g027896

Figure 15

1. Recoil-start handle
2. Kickstand

Kickstand

The kickstand (Figure 15) is mounted to the rear of the machine and is used to raise the rear of the machine for installation or removal of the transport wheels.

Specifications

	Model 04054	Model 04055	Model 04056
Width	84 cm (33 inches)	91 cm (36 inches)	104 cm (41 inches)
Height	114 cm (45 inches)	114 cm (45 inches)	122 cm (48 inches)
Length with basket	122 cm (48 inches)	122 cm (48 inches)	150 cm (59 inches)
Dry weight (with basket and Wiehle roller; without wheels or grooming reel)	97 kg (216 lb)	100 kg (220 lb)	105 kg (232 lb)
Width of cut	46 cm (18 inches)	53 cm (21 inches)	66 cm (26 inches)
Height of cut	1.6 mm to 31.8 mm (0.063 to 1.25 inches)	1.6 mm to 31.8 mm (0.063 to 1.25 inches)	3.1 mm to 31.7 mm (0.125 to 1.25 inches)
Clip	3.3 mm (0.13 inches)	4.3 mm (0.16 inch)	5.8 mm (0.23 inch)
Engine speed	Low idle –1,565 ±150 rpm, High idle – 3,375 ±100 rpm	Low idle –1,565 ±150 rpm, High idle – 3,375 ±100 rpm	Low idle –1,565 ±150 rpm, High idle – 3,375 ±100 rpm

Attachments/Accessories

A selection of Toro approved attachments and accessories is available for use with the machine to enhance and expand its capabilities. Contact your Authorized Service Dealer or Distributor or go to www.Toro.com for a list of all approved attachments and accessories.

Operation

Note: Determine the left and right sides of the machine from the normal operating position.

Think Safety First

Please carefully read all of the safety instructions and decals in the safety section. Knowing this information could help you or bystanders avoid injury.

⚠ CAUTION

This machine produces sound levels that can cause hearing loss through extended periods of exposure.

Wear hearing protection when operating this machine.

The use of protective equipment for eyes, ears, hands, feet, and head is recommended.

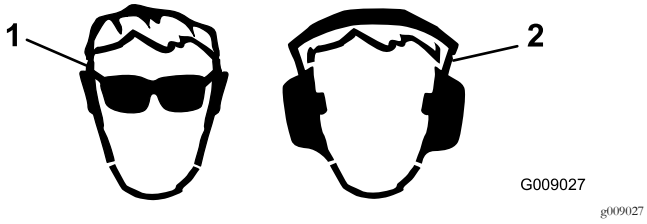

g009027

Figure 16

1. Wear safety glasses.
2. Wear hearing protection.

Checking the Engine-Oil Level

Check the engine-oil level before each use or every 8 operating hours, refer to Checking the Engine-Oil Level (page 22).

Filling the Fuel Tank

Note: The fuel tank capacity is 2.7 L (2-3/4 US qt).

- For best results, use only clean, fresh (less than 30 days old), unleaded gasoline with an octane rating of 87 or higher ((R+M)/2 rating method).
- **Ethanol**: Gasoline with up to 10% ethanol (gasohol) or 15% MTBE (methyl tertiary butyl ether) by volume is acceptable. Ethanol and MTBE are not the same. Gasoline with 15% ethanol (E15) by volume is not approved for use. **Never use gasoline that contains more than 10% ethanol by volume**, such as E15 (contains 15% ethanol), E20 (contains 20% ethanol), or E85 (contains up to 85% ethanol). Using unapproved gasoline may cause performance problems and/or engine damage which may not be covered under warranty.
- **Do not** use gasoline containing methanol.
- **Do not** store fuel either in the fuel tank or fuel containers over the winter unless a fuel stabilizer is used.
- **Do not** add oil to gasoline.

⚠ DANGER

In certain conditions, fuel is extremely flammable and highly explosive. A fire or explosion from fuel can burn you and others and can damage property.

- **Fill the fuel tank outdoors, in an open area, when the engine is cold. Wipe up any fuel that spills.**
- **Never fill the fuel tank inside an enclosed trailer.**
- **Do not fill the fuel tank completely full. Add fuel to the fuel tank until the level is 6 to 13 mm (1/4 to 1/2 inch) below the bottom of the filler neck. This empty space in the tank allows fuel to expand.**
- **Never smoke when handling fuel, and stay away from an open flame or where fuel fumes may be ignited by a spark.**
- **Store fuel in an approved container and keep it out of the reach of children. Never buy more than a 30-day supply of fuel.**
- **Do not operate without entire exhaust system in place and in proper working condition.**

⚠ DANGER

In certain conditions during fueling, static electricity can be released, causing a spark which can ignite the fuel vapors. A fire or explosion from fuel can burn you and others and can damage property.

- **Always place fuel containers on the ground away from your vehicle before filling.**
- **Do not fill fuel containers inside a vehicle or on a truck or trailer bed because interior carpets or plastic truck-bed liners may insulate the container and slow the loss of any static charge.**
- **When practical, remove equipment from the truck or trailer and fuel it on the ground. If this is not possible, then fuel such equipment with a portable container rather than from a fuel-dispenser nozzle.**
- **If you must use a fuel-dispenser nozzle, keep the nozzle in contact with the rim of the fuel tank or container opening at all times until fueling is complete.**

⚠ WARNING

Fuel is harmful or fatal if swallowed. Long-term exposure to vapors can cause serious injury and illness.

- **Avoid prolonged breathing of vapors.**
- **Keep face away from nozzle and fuel tank or conditioner bottle opening.**
- **Avoid contact with skin; wash off spills with soap and water.**

1. Clean around the fuel-tank cap and remove the cap from the tank (Figure 17).

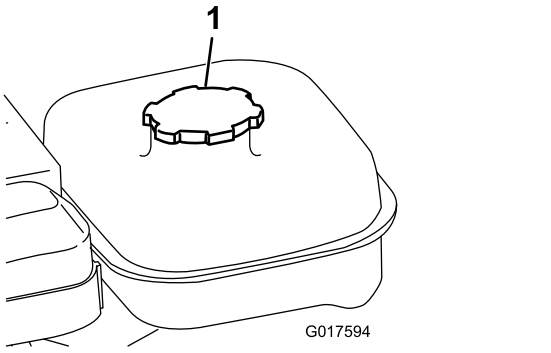

Figure 17

1. Fuel-tank cap

2. Using unleaded gasoline, fill the fuel tank no higher than the bottom of the filter screen.

   Note: This space allows the gasoline to expand. **Do not fill the fuel tank completely full.**

3. Install fuel-tank cap and wipe up any spilled gasoline.

Breaking-in the Machine

Refer to the engine manual supplied with the machine for oil change and maintenance procedures recommended during the break-in period.

Only 8 hours of mowing operation is required for the break-in period.

Since the first hours of operation are critical to future dependability of the machine, monitor its functions and performance closely so that minor difficulties, which could lead to major problems, are noted and can be corrected. Inspect the machine frequently during break-in for signs of oil leakage, loose fasteners, or any other malfunction.

To ensure optimum performance of the brake system, burnish (break-in) the brakes before using the machine. To burnish the brakes, firmly apply the brakes and drive the machine at mowing speed until the brakes are hot, as indicated by their smell. An adjustment to the brakes may be required after break-in; refer to Adjusting the Service/Parking Brake (page 25).

Checking the Interlock Switch Operation

⚠ CAUTION

If safety interlock switches are disconnected or damaged the machine could operate unexpectedly causing personal injury.

- **Do not tamper with the interlock switches.**
- **Check the operation of the interlock switches daily and replace any damaged switches before operating the machine.**

1. Push the kickstand down with your foot and pull up and back on the handle to raise the wheels off the ground.
2. Place the traction lever into the ENGAGE position and the engine controls in the starting position.
3. Attempt to start the engine.

   The engine should not start. If the engine starts, the interlock switch needs service. Correct the problem before operating.

4. Carefully lift up on the handle to release the kickstand.

Starting and Shutting Off the Engine

Note: For illustrations and descriptions of the controls referenced in this section, refer to the Controls (page 12) section.

Starting the Engine

Note: Ensure that the spark-plug wire is installed on the spark plug.

1. Ensure that the traction and reel-drive levers are in the DISENGAGED position.

   Note: The engine does not start if the traction lever is in the ENGAGED position.

2. Open the fuel shutoff valve on the engine.
3. Move the On/Off switch to the ON position.
4. Move the throttle control to the FAST position.
5. Move the choke lever halfway between the ON and OFF positions when starting a cold engine. The choke may not be required when starting a warm engine.
6. Pull the recoil-start handle out until positive engagement results, then pull it vigorously to start the engine.

   Important: Do not pull the recoil rope to the limit or let go of the starter handle when the rope is pulled out, because the rope may break or the recoil assembly may be damaged.

7. Move the choke to the OFF position as the engine warms up.

Shutting Off the Engine

1. Move the traction and reel-drive controls to the DISENGAGED position, the throttle control to the SLOW position, and the On/Off switch to the OFF position.
2. Pull the spark-plug wire off the spark plug to prevent the possibility of accidental starting before storing the machine.
3. Close the fuel shutoff valve before storing or transporting the machine in a vehicle.

Transporting the Machine

1. If the machine is equipped with the optional transport wheels, push the kickstand down with your foot and pull up on the handle to raise the rear of the machine and install the transport wheels.
2. To release the kickstand, pull up on the handle, push the machine forward, and then lower the rear of the machine onto the transport wheels.
3. Ensure that the traction and reel-drive controls are in the DISENGAGED position and start the engine.
4. Set the throttle control to SLOW, raise the front of the machine up slightly, gradually engage the traction drive and slowly increase the engine speed.
5. Adjust the throttle to operate the machine at the desired ground speed and transport the machine to the desired destination.
6. Return the traction-control lever to the DISENGAGE position, the throttle to the SLOW position, and shut off the engine.

Preparing to Mow

1. If the machine is equipped with the optional transport wheels, push the kickstand down with your foot and pull up and back on the handle to raise the wheels off the ground.
2. Push the locking clips on the wheels out of the grooves in the shafts.
3. Slide the wheels off the shafts.
4. Move the machine off the kickstand.

Mowing

Proper use of the machine provides the smoothest turf cutting available. Refer also to Operating Tips (page 18) for fundamental suggestions to obtain the utmost performance from your machine.

Important: Excessive operation of the cutting unit with the absence of grass clippings (lubricant) can damage the cutting unit.

1. Start the engine, set the throttle at a reduced speed, push down on the handle to raise the cutting unit, move the traction lever to the ENGAGED position, and transport the machine onto the collar of the green.
2. Move the traction lever to the DISENGAGED position and move the reel-drive lever to the ENGAGED position.
3. Move the traction lever to the ENGAGED position, increase the throttle speed until the machine is traveling at the desired ground speed, drive the machine onto the green, lower the front of the machine, and commence operation.

4. When you are finished mowing, drive off the green, move the traction-control lever to the DISENGAGED position, shut off the engine, and push the reel-drive lever into the DISENGAGED position.
5. Empty the grass basket of clippings, install the grass basket, and commence the transport operation.

Operating Tips

Before Mowing

- Ensure that the machine is carefully adjusted and is set evenly on both sides of the reel. Improper machine adjustment is magnified many times over in the appearance of the clipped turf.
- Remove all foreign objects from the turf prior to mowing.
- Ensure that everyone, especially children and pets, are clear of the work area.

Mowing Techniques

- Mow a green in a straight back and forth direction, across the green.
- Avoid circular mowing or turning the machine on a green because scuffing may occur. Turn the machine off the green by raising the cutting reel (pushing the handle down) and turning on the traction drum.
- Mow at a normal walking pace. Fast speed saves very little time and results in an inferior mowing job.

Maintenance

Note: Determine the left and right sides of the machine from the normal operating position.

Recommended Maintenance Schedule(s)

Maintenance Service Interval	Maintenance Procedure
After the first 20 hours	• Change the engine oil.
Before each use or daily	• Check the interlock switch operation. • Check the engine-oil level.
Every 25 hours	• Grease the machine (grease the fittings immediately after every washing regardless of the interval listed).
Every 50 hours	• Change the engine oil (more frequently in dusty or dirty conditions). • Clean and oil the foam air-cleaner element (more often in dirty or dusty conditions).
Every 100 hours	• Replace the paper air-filter element (more often in dirty or dusty conditions). • Check the spark plug.
Every 500 hours	• Check the intake and exhaust valves. Adjust them as necessary. • Clean the carburetor.
Every 1,000 hours	• Replace the fuel line. • Replace the breather hose. • Check the transmission-drive belts. • Check the transmission bearings.

Important: **Refer to your engine operator's manual for additional maintenance procedures.**

Daily Maintenance Checklist

Important: Duplicate this page for routine use.

Maintenance Check Item	For the week of:						
	Mon.	Tues.	Wed.	Thurs.	Fri.	Sat.	Sun.
Check the safety interlock operation.							
Check the parking brake operation.							
Check the fuel level.							
Check the engine oil level.							
Check the air filter.							
Clean the engine cooling fins.							
Check for unusual engine noises.							
Check for unusual operating noises.							
Check the reel-to-bedknife adjustment.							
Check the height-of-cut adjustment.							
Grease all fittings.							
Touch up damaged paint.							

Notation for Areas of Concern

Inspection performed by:		
Item	**Date**	**Information**

Lubrication

Greasing the Machine

Service Interval: Every 25 hours

Lubricate the 12 grease fittings on the machine using a No. 2 lithium grease. For best results, use a hand-operated grease gun.

The grease fitting locations are as follows:

- 2 on the front roller (Figure 18)
- 2 on the reel bearings (Figure 18)
- 2 on the drum axles (Figure 19)
- 3 on the differential (Figure 19)
- 2 on the reel countershaft bearings (Figure 20)
- 1 on the power shaft bearing (Figure 21).

1. Wipe each grease fitting with a clean rag.
2. Pump grease into each fitting until it begins to get difficult to pump the gun.

   Important: Do not apply too much pressure or grease seals will become permanently damaged.
3. Wipe off any excess grease.

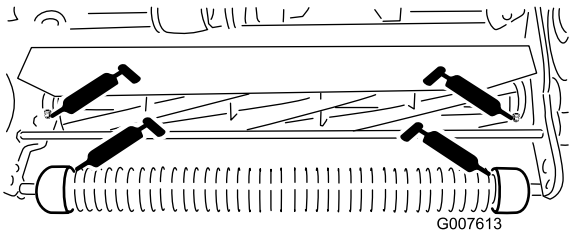

g007613

Figure 18

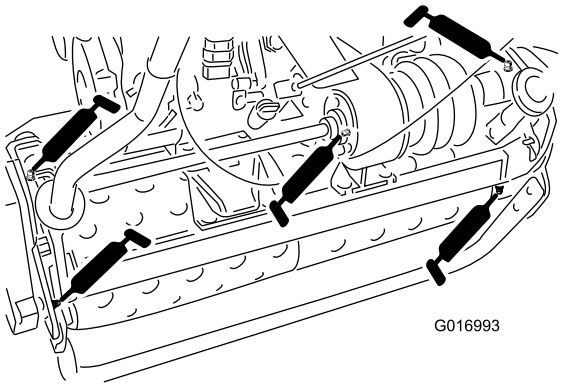

g016993

Figure 19

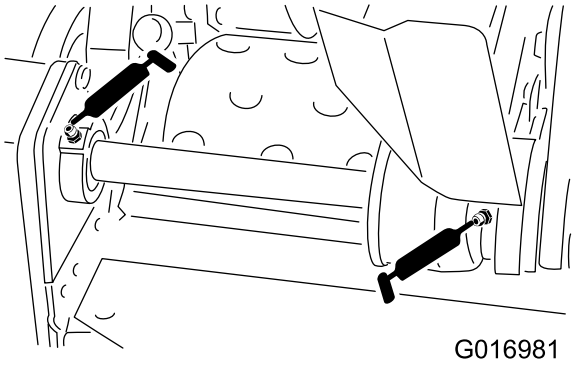

g016981

Figure 20

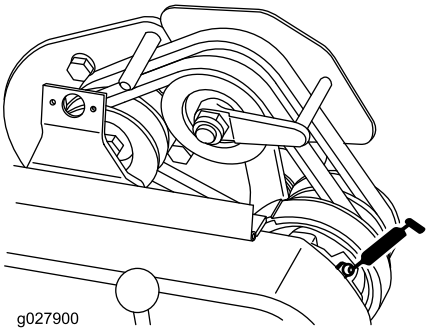

g027900

Figure 21

Engine Maintenance

Servicing the Engine Oil

Service Interval: After the first 20 hours—Change the engine oil.

Before each use or daily—Check the engine-oil level.

Every 50 hours—Change the engine oil (more frequently in dusty or dirty conditions).

The crankcase must be filled with approximately 0.62 L (21 fl oz) of proper viscosity oil before starting. The engine uses any high-quality oil with an APl service classification SF or higher. Refer to Figure 22 and use an oil with a viscosity that corresponds to the ambient temperature.

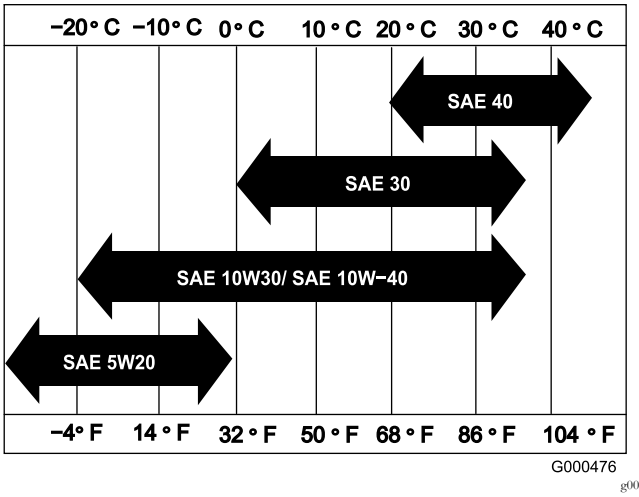

g000476

Figure 22

Note: Using multi-grade oils (5W-20, 10W-30, and 10W-40) increases oil consumption. Check the oil level more frequently when using them.

Checking the Engine-Oil Level

1. Position the machine so that the engine is level, and clean the area around the oil-level gauge (Figure 23).

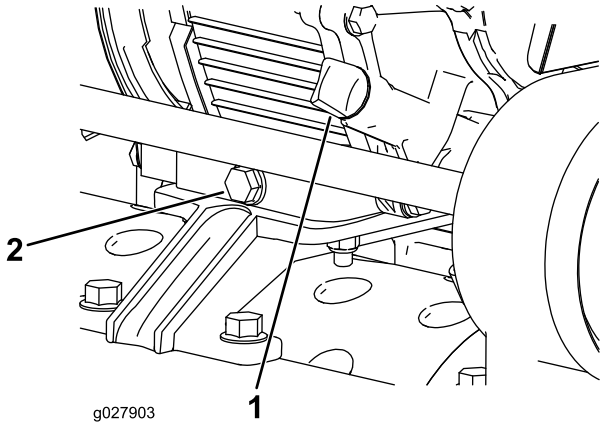

g027903

Figure 23

1. Oil-level gauge 2. Drain plug

2. Remove the oil-level gauge by rotating it counterclockwise.
3. Wipe the oil level gauge clean and insert it into the filler port, but **do not** screw it into the port.
4. Remove the gauge and check the level of the oil.
5. If the level is low, add only enough oil to raise the level until it is between the hatch marks on the gauge (Figure 24).

Important: **Do not overfill the crankcase.**

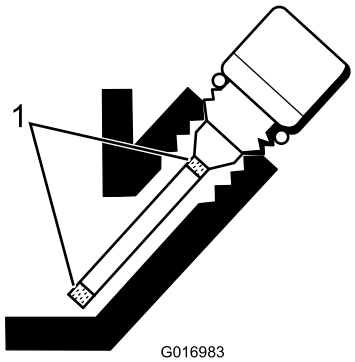

g016983

Figure 24

1. Hatch marks

6. Install the oil level gauge and wipe up any spilled oil.

Changing the Engine Oil

1. Start and run the engine for a few minutes to warm the engine oil.
2. Place a drain pan at the rear of machine, under the drain plug (Figure 23).
3. Remove the drain plug.
4. Push down on the handle to tip the machine and the engine backward, allowing more oil to run into the drain pan.
5. Install the drain plug and fill the crankcase with the proper oil; refer to Servicing the Engine Oil (page 22).

Servicing the Air Cleaner

Service Interval: Every 50 hours—Clean and oil the foam air-cleaner element (more often in dirty or dusty conditions).

Every 100 hours—Replace the paper air-filter element (more often in dirty or dusty conditions).

Important: Service the air cleaner more often in dirty or dusty conditions

1. Make sure that the wire is off the spark plug.
2. Remove the wing nut securing the air-cleaner cover and remove the cover (Figure 25).

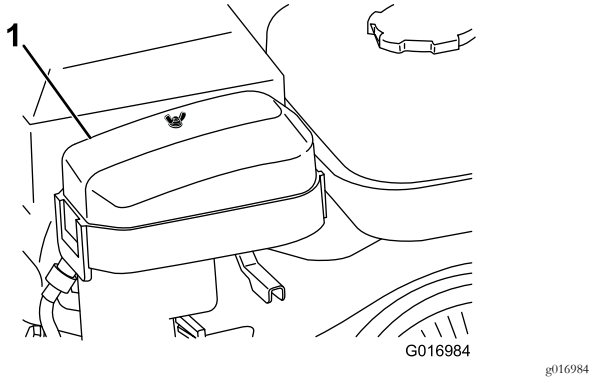

Figure 25

1. Air-cleaner cover

3. Clean the cover thoroughly.
4. If the foam element is dirty, remove it from the paper element (Figure 26) and clean it thoroughly, as follows:
   A. Wash the foam element in a solution of liquid soap and warm water. Squeeze it to remove dirt, but do not twist it because the foam may tear.
   B. Dry the foam element by wrapping it in a clean rag. Squeeze the rag and foam element to dry it, but do not twist it.
   C. Saturate the foam element with clean engine oil. Squeeze the element to remove excess oil and to distribute the oil thoroughly. An oil damp element is desirable.

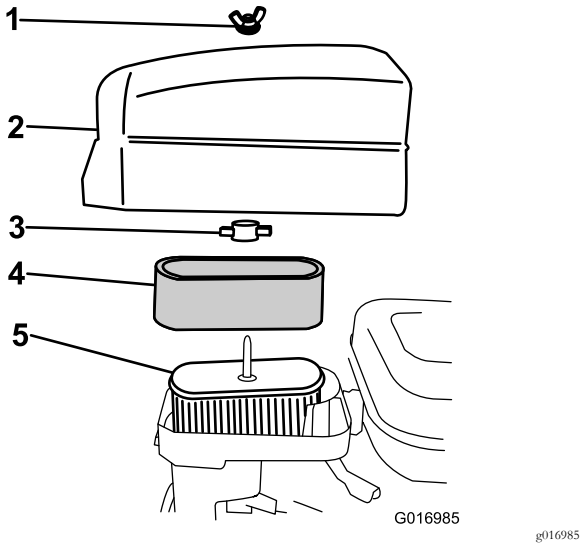

Figure 26

1. Wing nut
2. Air-cleaner cover
3. Plastic wing nut
4. Foam element
5. Paper element

5. Check the condition of the paper element. Clean it by gently tapping or replace it as required.

   Important: Do not use compressed air to clean the paper element.

6. Install the foam element, paper element, and air cleaner cover.

   Important: Do not operate the engine without the air-cleaner element because extreme engine wear and damage will likely result.

Replacing the Spark Plug

Service Interval: Every 100 hours

Use an NGK BR6HS spark plug or equivalent. The correct air gap is 0.6 to 0.7 mm (0.024 to 0.028 inch).

1. Pull the molded wire off the spark plug (Figure 27).

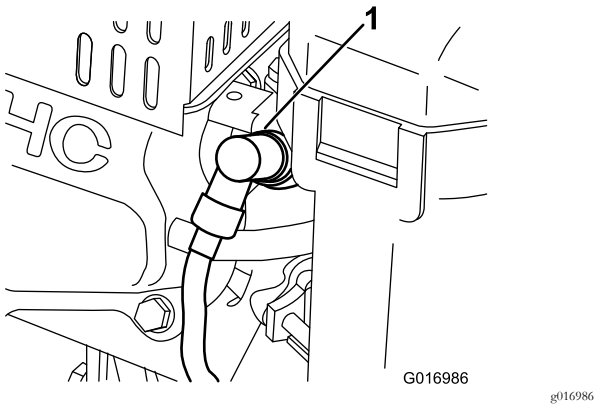

Figure 27

1. Spark-plug wire

2. Clean around the spark plug and remove it from the cylinder head.

   Important: Replace a cracked, fouled, or dirty spark plug. Do not sand blast, scrape, or clean electrodes because engine damage could result from grit entering the cylinder.

3. Ensure that the air gap is correct (Figure 28).

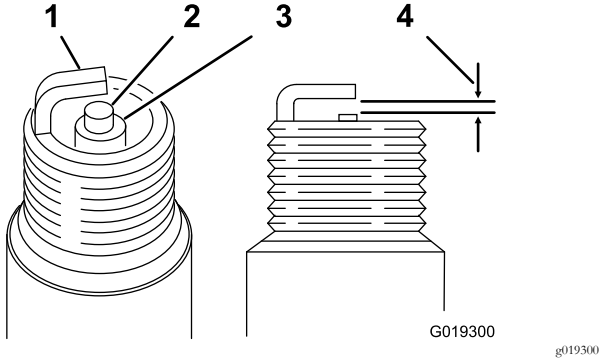

Figure 28

1. Side electrode
2. Center electrode
3. Insulator
4. 0.6 to 0.7 mm (0.024 to 0.028 inch) gap

4. Install the correctly gapped spark plug and tighten it to 23 N·m (17 ft-lb).
5. Install the spark-plug wire on the spark plug.

Fuel System Maintenance

Cleaning the Fuel Filter

1. Close the fuel-shutoff valve and unscrew the sediment bowl from the carburetor body (Figure 29).

   Note: Using a 17 mm, 12-point socket over the bottom of the sediment bowl can prevent damage to the sediment bowl.

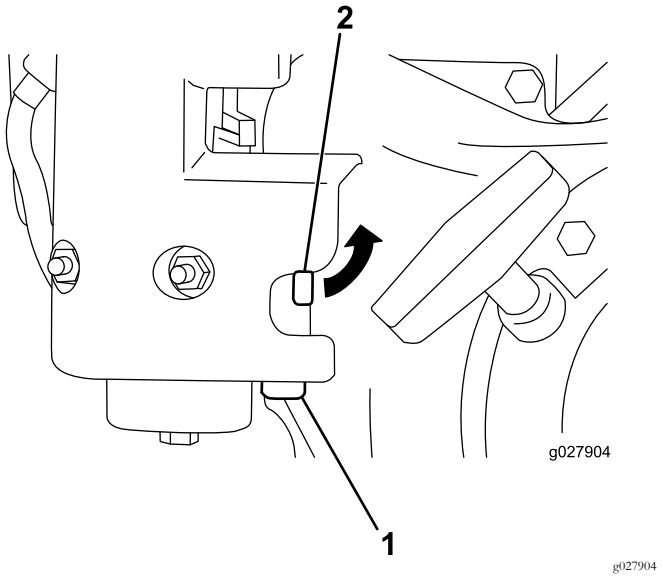

Figure 29

1. Sediment owl
2. Fuel-shutoff valve

2. Clean the bowl and filter in clean gasoline and install it.

Electrical System Maintenance

Servicing the Interlock Switch

Use the following procedure if the switch needs adjustment or replacement.

1. Make sure that the engine is off and the traction lever is disengaged and resting against the neutral stop (Figure 30).

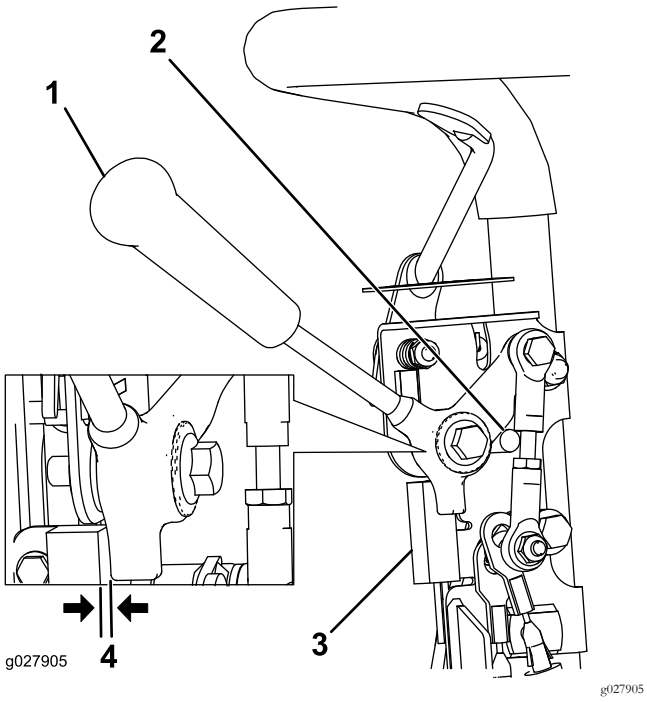

Figure 30

1. Traction lever
2. Neutral stop
3. Interlock switch
4. 0.8 mm (0.032 inch) gap

2. Loosen the interlock switch mounting fasteners (Figure 30).
3. Place a 0.8 mm (0.032 inch) thick shim between the traction lever and the interlock switch (Figure 30).
4. Tighten the interlock switch mounting fasteners and check the gap again.

   Note: The traction lever must not contact the switch.
5. Engage the traction lever and verify that the switch loses continuity.

   Note: Replace the switch if required.

Brake Maintenance

Adjusting the Service/Parking Brake

If the service/parking brake slips when operated, an adjustment is required.

1. Engage the service brake, push in on the parking brake knob and allow the service brake to rest on the parking brake pin (Figure 31).

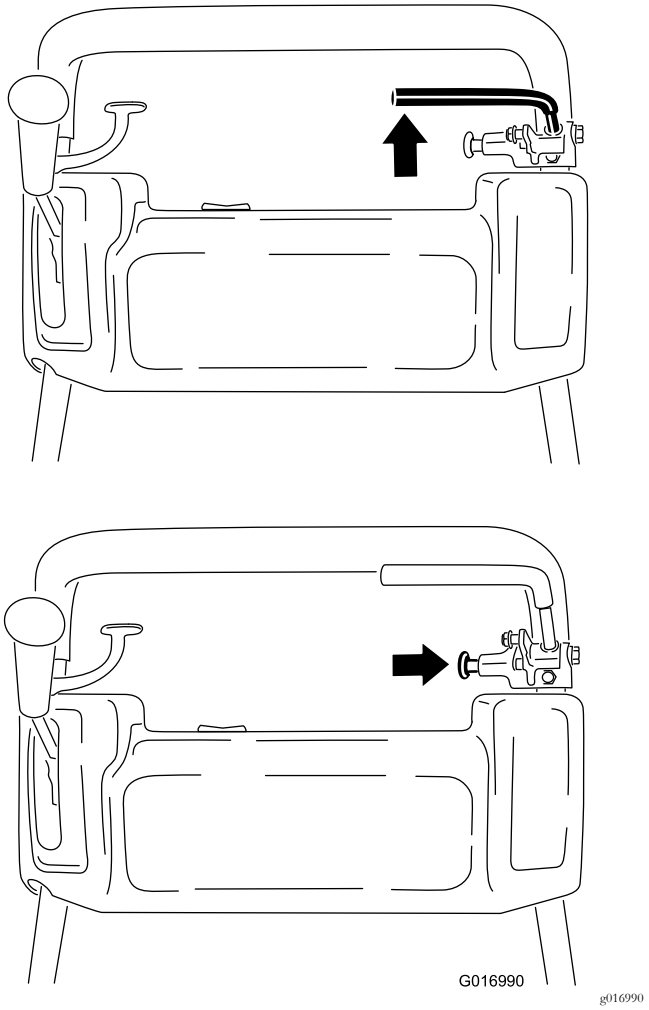

Figure 31

2. Using a spring scale, press rearward on the service-brake lever (Figure 32). The parking brake should release when a force of 13.5 to 18 kg (30 to 40 lb) is attained. If the parking brake releases before 13.5 to 18 kg (30 to 40 lb) of force is attained, adjust the brake cable. Proceed to step 3.

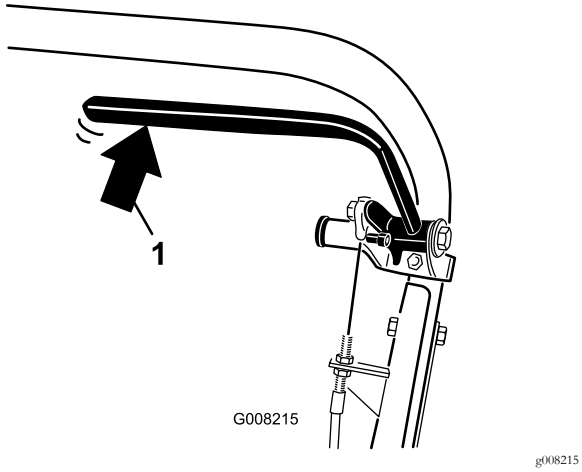

Figure 32

1. Rear pressure on the service-brake lever

3. Loosen the retainer securing the V-belt cover and pivot the cover open (Figure 33).

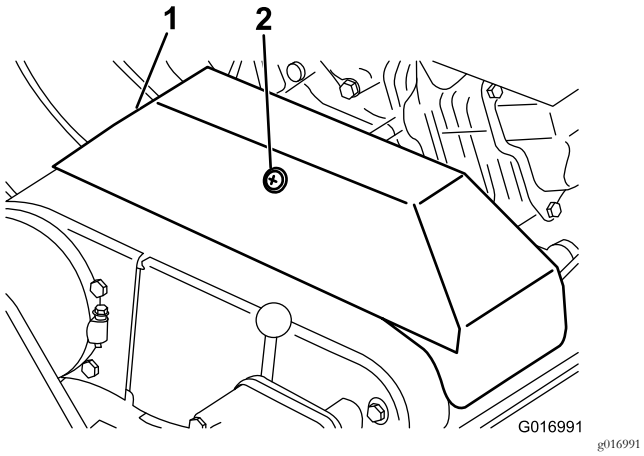

Figure 33

1. V–belt cover
2. Retainer

4. To adjust the brake cable tension, proceed as follows.
   - To decrease the cable tension, loosen the front cable jam nut and tighten the rear jam nut (Figure 34). Repeat steps 1 and 2 and adjust the tension if required.
   - To increase the cable tension, tighten the front cable jam nut and loosen the rear jam nut (Figure 34). Repeat steps 1 and 2 and adjust the tension if required.

   Note: The adjustment can be performed on the cable at the jam nut brackets by the control panel or at the bracket at the base of the engine.

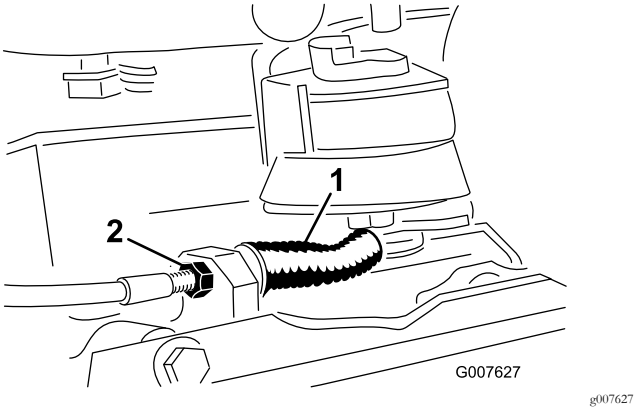

Figure 34

1. Service/parking brake cable
2. Front jam nut

5. Close the cover and secure the retainer.

Belt Maintenance

Adjusting the Belts

Ensure that the belts are properly tensioned to ensure proper operation of the machine and prevent unnecessary wear. Check the belts frequently.

Adjusting the Reel-Drive Belt

1. Remove the belt cover mounting fasteners and the belt cover to expose the belt (Figure 35).

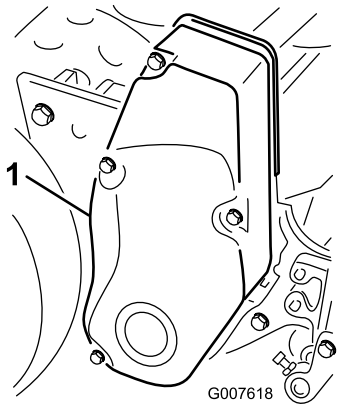

g007618

Figure 35

1. Belt cover

2. Check the tension by pressing the belt at mid span of the pulleys (Figure 36) with 18 to 22 N (4 to 5 lb) of force. The belt should deflect 6 mm (1/4 inch).

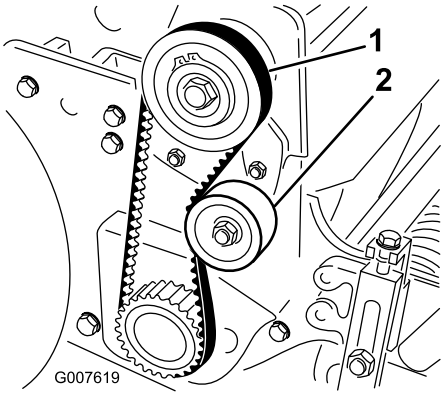

g007619

Figure 36

1. Reel-drive belt
2. Idler pulley

3. Complete the following to adjust the belt tension:
   A. Loosen the idler-pulley mounting nut and pivot the idler pulley clockwise against the backside of the belt until you attain the desired belt tension (Figure 36).

      Important: Do not over-tension the belt.

   B. Tighten the nut to lock the adjustment.
4. Install the belt cover by placing it in position.
5. While maintaining a slight gap between the cover seal and the side plate, install each mounting bolt until the threads engage in the insert.

   Note: The gap allows visual alignment of the bolts to the threaded inserts.
6. After all bolts are installed, tighten them until the stand-offs inside the cover contact the side plate.

   Note: Do not overtighten the bolts.

Adjusting the Traction-Drive Belt

1. Remove the belt-cover mounting fasteners and the belt cover to expose the belt (Figure 37).

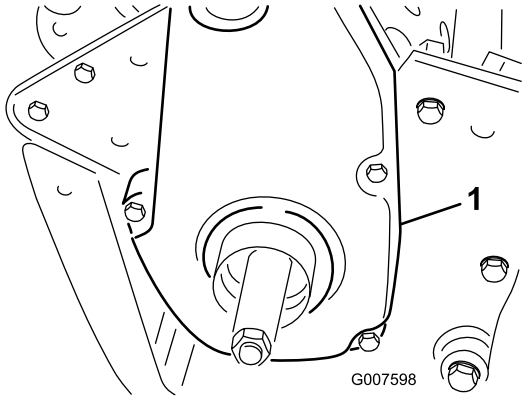

g007598

Figure 37

1. Traction-drive-belt cover

2. Check the tension by pressing the belt at mid span of the pulleys (Figure 38) with 18 to 22 N (4 to 5 lb) of force.

   Note: The belt should deflect 6 mm (1/4 inch).

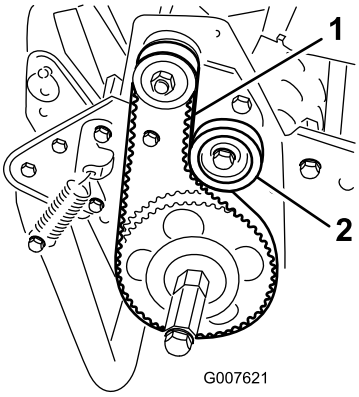

g007621

Figure 38

1. Traction-drive belt
2. Idler pulley

3. Complete the following to adjust the belt tension:
   A. Loosen the idler-pulley mounting nut and pivot the idler pulley clockwise against the backside of

the belt until the desired belt tension is attained (Figure 38).

Important: Do not over-tension the belt.

B. Tighten the nut to lock the adjustment.

4. Install the belt cover by placing it in position.
5. While maintaining a slight gap between the cover seal and the side plate, install each mounting bolt until the threads engage in the insert.

Note: The gap allows visual alignment of the bolts to the threaded inserts.

6. After all bolts are installed, tighten them until the stand-offs inside the cover contact the side plate.

Note: Do not overtighten the bolts.

Adjusting the Differential Belt

1. Remove the bolts securing the front and rear sections of the differential cover to the differential housing and slide the cover sections away to expose the belt.
2. Check the tension by pressing the belt at mid span of the pulleys (Figure 39) with 22 to 26 N (5 to 6 lb) of force.

Note: The belt should deflect 6 mm (1/4 inch).

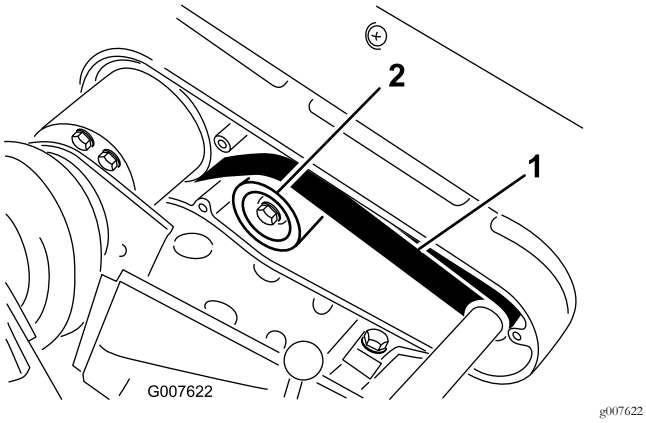

Figure 39

1. Differential belt
2. Idler pulley

3. Complete the following to adjust the belt tension:

A. Loosen the idler pulley mounting nut and pivot the idler pulley clockwise against the backside of the belt until the desired belt tension is attained (Figure 39).

Important: Do not over-tension the belt.

B. Tighten the nut to lock the adjustment.

4. Install the belt cover by placing it in position.
5. While maintaining a slight gap between the cover seal and the side plate, install each mounting bolt until the threads engage in the insert. The gap allows visual alignment of the bolts to the threaded inserts.
6. After all bolts are installed, tighten them until the stand-offs inside the cover contact the side plate. Do not overtighten the bolts.

Adjusting the Primary V-Belts

1. To adjust the belt tension on primary V-belts, first check the adjustment of the traction control; refer to Adjusting the Traction Control (page 30). If you are unable to attain the 2.75 to 3.25 kg (6 to 7 lb) force required in adjusting the traction control, proceed to the next step.
2. Loosen the retainer securing the V-belt cover and pivot the cover open (Figure 40).

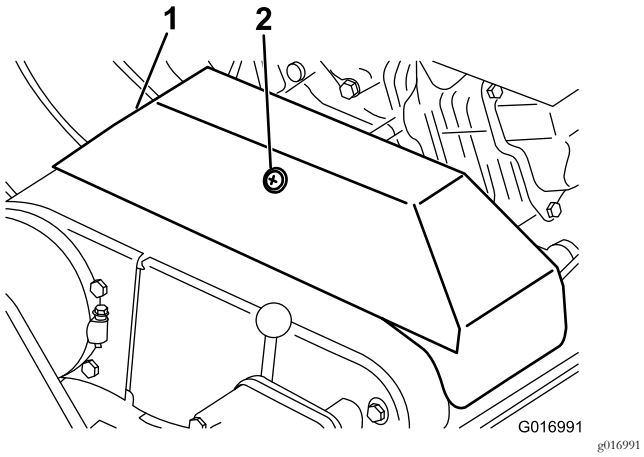

Figure 40

1. V-belt cover
2. Retainer

3. To increase belt tension, loosen the engine mounting bolts and move the engine backwards in the slots.

   Important: Do not over-tension the belt.

4. Tighten the mounting bolts.

   Note: The distance between the center of the drive pulley and the center of the driven pulley should be approximately 12.85 cm (5.06 inches) after new V-belts are installed.

5. After tensioning the primary V-belts, check the alignment of the engine output-shaft pulley and the counter-shaft pulley with a straightedge.
6. If the pulleys are misaligned, loosen the screws securing the engine mounting base to the machine frame and slide the engine from side to side until the pulleys are aligned within 0.7 mm (0.030 inch).

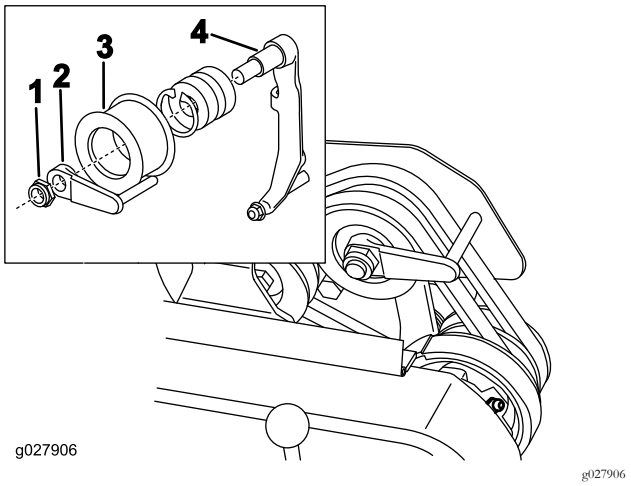

Figure 41

1. Locknut
2. Belt guide
3. Idler pulley
4. Idler arm

7. Tighten the mounting screws and check the alignment.
8. To push or pull the machine easier without starting the engine, adjust the belt guide (Figure 41, inset) as follows:

   A. Engage the clutch.

   B. Loosen the locknut securing the idler pulley and the belt guide to the idler arm.

   C. Rotate the belt guide clockwise until a gap of approximately 1.5 mm (0.06 inch) is obtained between the guide finger and the backside of the drive belts.

   D. Tighten the locknut securing the idler pulley and the belt guide to the idler arm.

9. Close the cover and secure the retainer.

Replacing the Differential Belt

1. Remove the bolts securing the traction drive and reel-drive belt covers to the right side plate and remove the belt covers.
2. Loosen the idler pulley mounting nut on each idler pulley and pivot each idler pulley counterclockwise away from the backside of each belt to release the belt tension.
3. Remove the belts.
4. Remove the bolts securing the front and rear sections of the differential cover to the differential housing and slide the cover sections away to expose the belt (Figure 42).

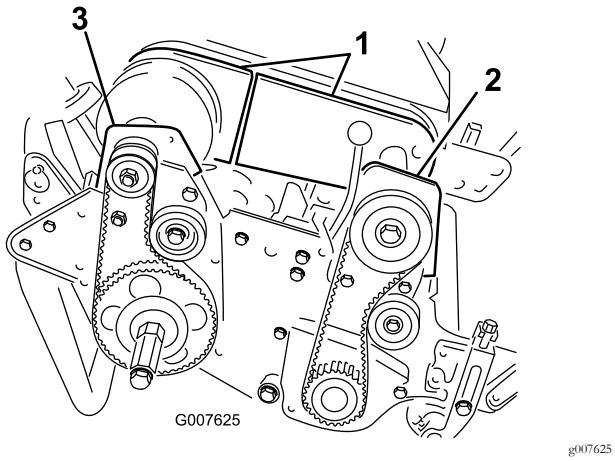

Figure 42

1. Differential cover sections
2. Front clutch housing
3. Right rear bearing housing

5. Loosen the idler pulley mounting nut on the differential idler pulley and pivot the idler pulley counterclockwise away from the backside of the belt to release the belt tension.
6. Remove the 2 bolts and locknuts securing the front clutch housing to the side plate (Figure 42).
7. Rotate the housing 180° so that the bottom of the housing points upward.
8. Remove the 2 bolts and locknuts securing the right rear bearing housing to the side plate (Figure 42).
9. Rotate the housing 180° so that the bottom of the housing points upward.
10. Remove the old belt.
11. Slide the new belt over the rotated housing covers and the differential cover sections, and onto the differential pulleys.
12. Ensure that the idler pulley is positioned against the backside of the belt.
13. Rotate both housings back into the upright position and secure them to the side plate with the bolts and nuts previously removed.
14. Adjust the differential belt tension; refer to Adjusting the Differential Belt (page 28).
15. Adjust the belt tension on the traction drive and reel-drive belts; refer to Adjusting the Traction-Drive Belt (page 27), and Adjusting the Reel-Drive Belt (page 27).
16. Install the differential, traction drive, and reel-drive covers.

Controls System Maintenance

Adjusting the Traction Control

If the traction control does not engage or it slips during operation, adjust it.

1. Move the traction control to the DISENGAGED position.
2. Loosen the retainer securing the V-belt cover and pivot the cover open (Figure 40).
3. To increase the cable tension, loosen the front cable jam nut and tighten the back cable jam nut (Figure 43) until a force of 2.75 to 3.25 kg (6 to 7 lb) to engage the traction control.

   Note: Measure the force at the control knob.

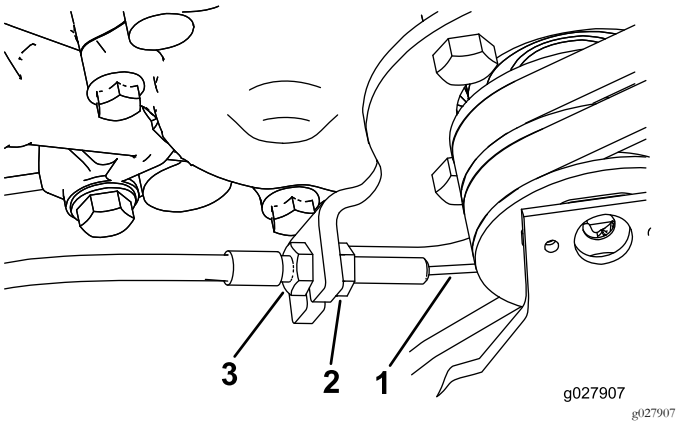

Figure 43

1. Traction cable
2. Front jam nut
3. Back jam nut

4. Tighten the front cable jam nut.
5. Close the cover and secure the retainer.
6. Check the traction control operation.

Cutting Unit Maintenance

Leveling the Rear Drum to the Reel

1. Position the machine on a flat, level surface, preferably a precision steel work plate.
2. Place a 0.6 x 2.5 cm (1/4 x 1 inch) flat steel strip, approximately 73.6 cm (29 inches) long, under the reel blades and against the front edge of the bedknife to prevent the bedbar from resting on the work surface.
3. Raise the front roller so that only the rear drum and the reel are on the surface.
4. Firmly press down on the machine above the reel so that all reel blades contact the steel strip.
5. While pressing down on the reel, slide a feeler gauge under one end of the drum, then check the other end of the drum.

   Note: If there is a gap between the drum and the work surface, greater than 0.25 mm (0.010 inch), on either end, adjust the drum (proceed to step 6). If the gap is less than 0.25 mm (0.010 inch), no adjustment is required.
6. Remove the rear belt cover from the right side of the machine (Figure 44).

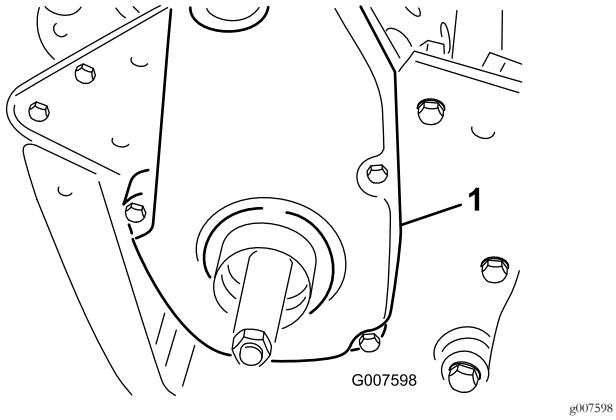

Figure 44

1. Traction-drive belt cover

7. Rotate the driven pulley until the holes align with the 4 roller bearing flange screws (Figure 45).

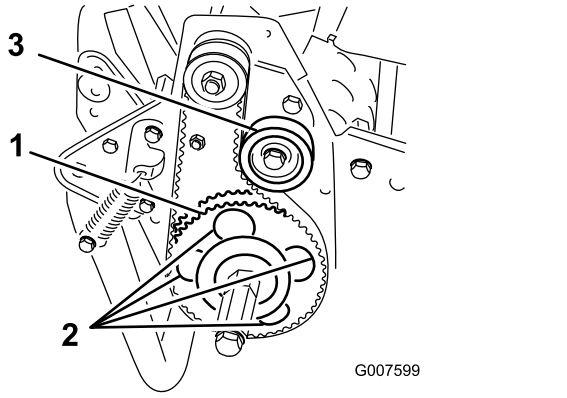

Figure 45

1. Driven pulley
2. 4 holes
3. Idler pulley

8. Loosen the 4 roller bearing screws and the screw securing the idler pulley.
9. Raise or lower the right side of the roller assembly until the gap is less than 0.25 mm (0.010 inch).
10. Tighten the roller bearing screws.
11. Adjust the belt tension and tighten the idler pulley mounting screw (Figure 45).

Adjusting the Bedknife to the Reel

Note: Use this procedure after grinding, backlapping, or disassembly. It is not intended as a daily adjustment.

1. Position the machine on a flat, level work surface.
2. Tilt the machine back on the handle to expose the bedknife and the reel.

   Important: Do not tilt the machine back further than 60 degrees to prevent fuel leakage.
3. Rotate the reel so that a blade crosses the bedknife edge between the first and second bedknife screw heads on the right side of the cutting unit (Figure 46).

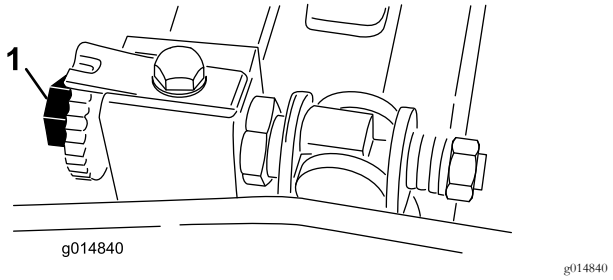

Figure 46

1. Bedbar-adjusting screw

4. Rotate the reel so that a blade crosses the bedknife edge between the first and second bedknife screw heads on the right side of the cutting unit.

5. Insert the 0.05 mm (0.002 inch) shim between the marked blade and the bedknife edge at the point where the marked blade crosses the bedknife edge.
6. Turn the right bedbar-adjusting screw until you feel light pressure (i.e. drag) on the shim by sliding it side-to-side (Figure 46).
7. Remove the shim.
8. For the left side of the cutting unit, slowly rotate the reel so that the closest blade crosses the bedknife edge between the first and second screw heads.
9. Repeat steps 4 through 7 for the left side of the cutting unit and left bedbar-adjusting screw.
10. Repeat steps 5 through 7 until light drag is achieved on both the right and left sides of the cutting unit utilizing the same contact points.
11. To obtain light contact between the reel and bedknife, turn each bedbar-adjusting screw clockwise 3 clicks.

    Note: Each click turned on the bedbar-adjusting screw moves the bedknife 0.018 mm (0.0007 inch). Clockwise rotation moves the bedknife edge closer to the reel and counterclockwise rotation move the bedknife edge away from the reel.
12. Test the cutting performance by inserting a long strip of cutting performance paper between the reel and bedknife, perpendicular to the bedknife (Figure 47). Slowly rotate the reel forward; it should cut paper.

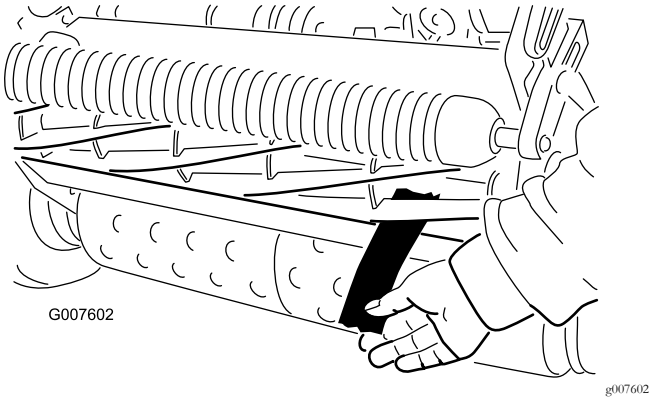

Figure 47

Note: If excessive contact/reel drag is evident it will be necessary to backlap, face the front of the bedknife, or grind the cutting unit to achieve the sharp edges needed for precision cutting.

Adjusting the Height of Cut

1. Verify that the rear roller is level and that the bedknife-to-reel contact is correct. Tip the machine back on the handle to expose the front and rear rollers and the bedknife.
2. Loosen the locknuts securing the height-of-cut arms to the height-of-cut brackets (Figure 48).

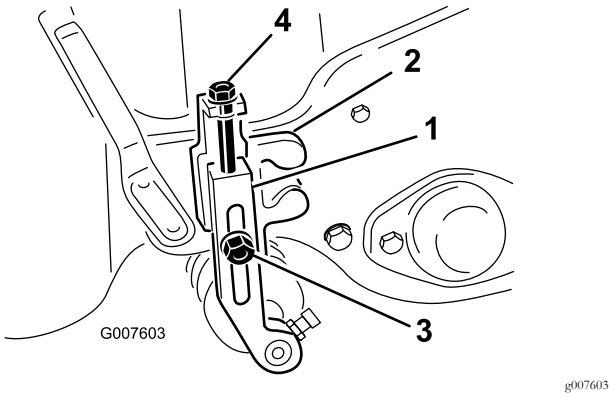

Figure 48

1. Height-of-cut arm
2. Height-of-cut bracket
3. Locknut
4. Adjusting screw

3. Loosen the nut on the gauge bar (Figure 49) and set the adjusting screw to the desired height of cut. The distance between the bottom of the screw head and the face of the bar is the height of cut.

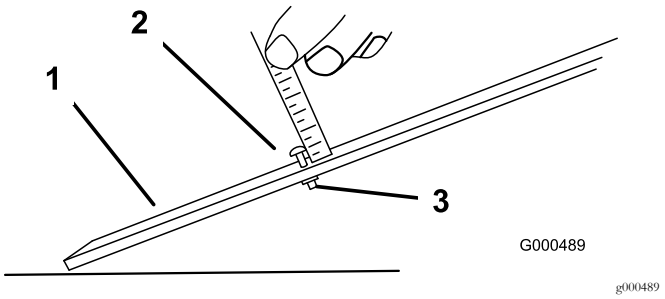

Figure 49

1. Gauge bar
2. Height-adjusting screw
3. Nut

4. Hook the screw head on the cutting edge of the bedknife and rest the rear end of the bar on the rear roller (Figure 50).

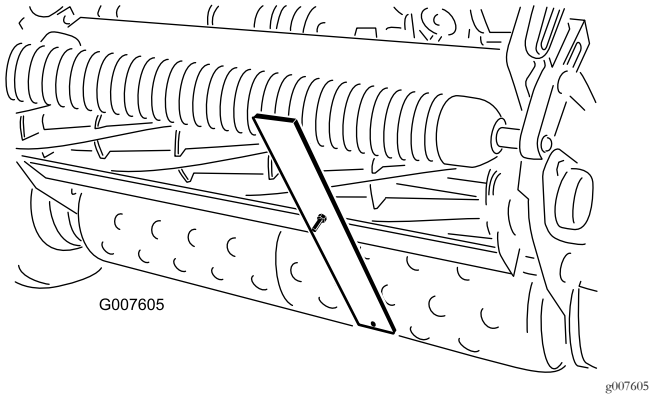

Figure 50

5. Rotate the adjusting screw until the roller contacts the front of the gauge bar.
6. Adjust both ends of the roller until the entire roller is parallel to the bedknife.

   Important: When set properly, the rear and front rollers will contact the gauge bar and the screw will be snug against the bedknife. This ensures that the height of cut is identical at both ends of the bedknife.
7. Tighten nuts to lock the adjustment.

   Important: To avoid scalping on undulating turf, ensure that the roller supports are positioned rearward (the roller closer to the reel).

   Note: The front roller can be put in 3 different positions (Figure 51), depending on the application and needs of the user.

   - Use the front position when a groomer is installed.
   - Use the middle position without a groomer.
   - Use the third position in extremely undulating turf conditions.

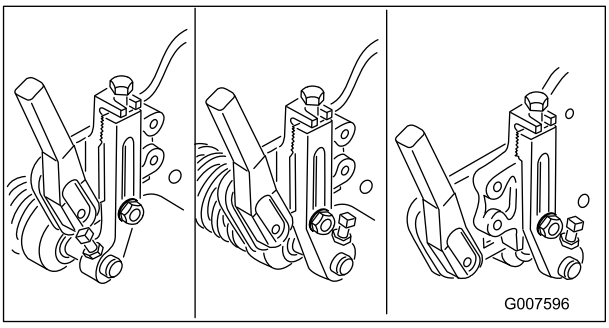

Figure 51

Adjusting the Grass Shield Height

Adjust the shield to ensure proper grass clipping discharge into the basket.

1. Measure the distance from the top of the front support rod to the front lip of the shield at each end of the cutting unit (Figure 52).

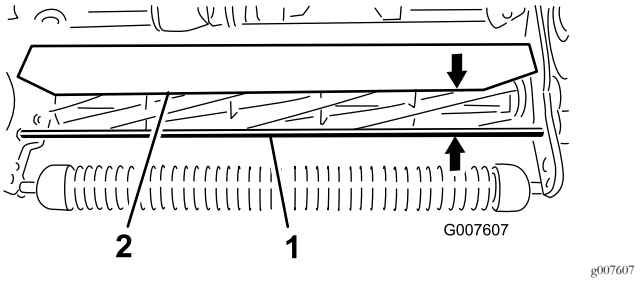

Figure 52

1. Support rod
2. Shield

2. The height of the shield from the support rod for normal cutting conditions should be 10 cm (4 inches). Loosen the bolts and nuts securing each end of the shield to the side plate and adjust the shield to the correct height.
3. Tighten the fasteners.

   Note: You can lower the shield for drier conditions (clippings fly over the top of the basket) or raise it to allow for heavy, wet grass conditions (clippings build up on the rear of the basket).

Adjusting the Cut-off Bar

Adjust the cut-off bar to ensure that the clippings are cleanly discharged from the reel area.

1. Loosen the screws securing the top bar (Figure 53) to the cutting unit.

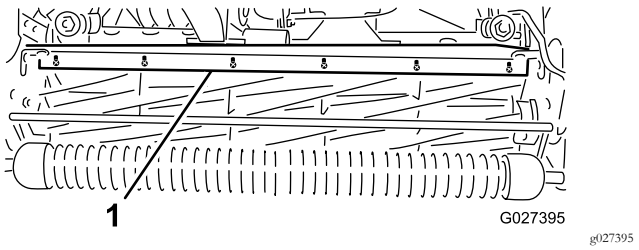

Figure 53

1. Cut-off bar

2. Insert a 1.5 mm (0.060 inch) feeler gauge between the top of the reel and the bar and tighten the screws.
3. Ensure that the bar and reel are equal distances apart across the entire reel.

Note: The bar is adjustable to compensate for changes in turf conditions. Adjust the bar closer to the reel when the turf is extremely wet. By contrast, adjust the bar further away from the reel when turf conditions are dry. The bar should be parallel to the reel to ensure optimum performance. Adjust the bar whenever you adjust the shield height or when you sharpen the reel on a reel grinder.

Bedbar Identification

To determine if the bedbar is standard or aggressive, check the left bedbar mounting ears. If the mounting ears are rounded, it is a standard bedbar. If the mounting ears have a notch in them, it is an aggressive bedbar (Figure 54).

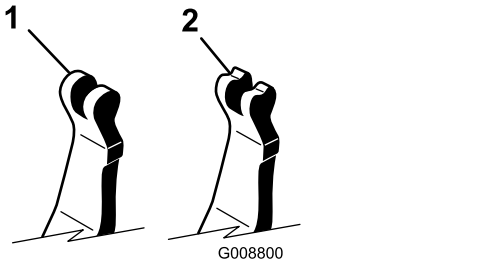

g008800

Figure 54

1. Standard bedbar
2. Aggressive bedbar

Setting the Machine to Match Turf Conditions

Use the following table to set the machine to match turf conditions.

Greensmower Cutting Unit Setup Matrix				
Bedbars: Standard and Optional				
Part Number	**Description**	**Mower**	**Aggressiveness**	**Comments**
120-2682-03	Standard	Greensmaster 800	Less	Standard Greensmaster 800
112-9281-01	Standard	Greensmaster 1000	Less	Standard Greensmaster 1000
112-9279-03	Aggressive	Greensmaster 1000	More	
112-9280-01	Standard	Greensmaster 1600	Less	Standard Greensmaster 1600
110-9278-03	Aggressive	Greensmaster 1600	More	
Bedknives: Standard and Optional				
Part Number	**Description**	**Mower**	**Height of Cut Range**	**Comments**
98-7261	Microcut	Greensmaster 800	1.57–3.1 mm (0.062–0.125 inch)	
117-1530	EdgeMax Microcut	Greensmaster 800	1.57–3.1 mm (0.062–0.125 inch)	Standard Greensmaster 800
98-7260	Tournament	Greensmaster 800	3.1–6.0 mm (0.125–0.250 inch)	
117-1532	EdgeMax Tournament	Greensmaster 800	3.1–6.0 mm (0.125–0.250 inch)	Longer wearing
110-2300	Extended Microcut	Greensmaster 800	1.57–3.1 mm (0.062–0.125 inch)	Less aggressive
110-2301	Low cut	Greensmaster 800	6.0 mm (0.250 inch) and up	
93-4262	Microcut	Greensmaster 1000	1.57–3.1 mm (0.062–0.125 inch)	
115-1880	EdgeMax Microcut	Greensmaster 1000	1.57–3.1 mm (0.062–0.125 inch)	Standard Greensmaster 1000
93-4263	Tournament	Greensmaster 1000	3.1–6.0 mm (0.125–0.250 inch)	
115-1881	EdgeMax Tournament	Greensmaster 1000	3.1–6.0 mm (0.125–0.250 inch)	Longer wearing
93-4264	Low cut	Greensmaster 1000	6.0 mm (0.250 inch) and up	
108-4303	Extended Microcut	Greensmaster 1000	1.57–3.1 mm (0.062–0.125 inch)	Less aggressive
112-9275	Microcut	Greensmaster 1600	Less than 3.1 mm (0.125 inch)	
94-5885	Tournament	Greensmaster 1600	3.1–6.0 mm (0.125–0.250 inch)	
104-2646	High cut	Greensmaster 1600	6.0 mm (0.250 inch) and up	Tees
93-9015	Low cut	Greensmaster 1600	6.0 mm (0.250 inch) and up	Standard Greensmaster 1600
117-1548	Edgemax Microcut	Greensmaster 1600	1.52 to 3.1 mm (0.060 to 0.122)	Longer wearing - Standard Greensmaster 1610

Rollers: Standard and Optional				
Part Number	**Description**	**Mower**	**Diameter/Material**	**Comments**
99-6240	Narrow Wiehle	Greensmaster 800	50.8 mm (2.0 inches) Aluminum	Standard, 0.20 inch spacing
99-6241	Narrow Wiehle	Greensmaster 1000	50.8 mm (2.0 inches) Aluminum	Standard, 0.20 inch spacing
88-6790	Wide Wiehle	Greensmaster 1000	50.8 mm (2.0 inches) Aluminum	More penetration, 0.43 inch spacing
104-2642	Full roller	Greensmaster 1000	50.8 mm (2.0 inches) Steel	Least penetration
71-1550	Wiehle roller	Greensmaster 1000	50.8 mm (2.0 inches) Cast Iron	More penetration, 0.43 inch spacing
93-9045	Wiehle roller	Greensmaster 1000	63.5 mm (2.5 inches) Aluminum	24 inches wide for edge support
52-3590	Swaged roller	Greensmaster 1000	63.5 mm (2.5 inches) Aluminum	
93-9039	Narrow Wiehle	Greensmaster 1600	63.5 mm (2.5 inches) Aluminum	Standard
95-0930	Full roller	Greensmaster 1600	63.5 mm (2.5 inches) Steel	Least penetration

Clip Table for Fixed-Head Walk-Behind Greensmowers												
Model	Standard			Clip Kit 65–9000			Traction Kit 115–1886			Clip and Traction Kits		
	Standard reel	Optional reel		Standard reel	Optional reel		Standard reel	Optional reel		Standard reel	Optional reel	
04054	14–blade 3.3 mm (0.13 inches)	11–blade 4.1 mm (0.16 inches)		14–blade 4.8 mm (0.19 inches)	11–blade 6.4 mm (0.25 inches)		14–blade 3.0 mm (0.12 inches)	11–blade 3.8 mm (0.15 inches)		14–blade 4.3 mm (0.17 inches)	11–blade 5.6 mm (0.22 inches)	
04055	11–blade 4.1 mm (0.16 inches)	14–blade 3.3 mm (0.13 inches)	8–blade 5.8 mm (0.23 inches)	11–blade 6.4 mm (0.25 inches)	14–blade 4.8 mm (0.19 inches)	8–blade 8.6 mm (0.34 inches)	11–blade 3.8 mm (0.15 inches)	14–blade 3.0 mm (0.12 inches)	8–blade 5.1 mm (0.20 inches)	11–blade 5.6 mm (0.22 inches)	14–blade 4.3 mm (0.17 inches)	8–blade 7.6 mm (0.30 inches)
04056	8–blade 5.8 mm (0.23 inches)	11–blade 4.1 mm (0.16 inches)		8–blade 8.6 mm (0.34 inches)	11–blade 6.4 mm (0.25 inches)		8–blade 5.1 mm (0.20 inches)	11–blade 3.8 mm (0.15 inches)		8–blade 7.6 mm (0.30 inches)	11–blade 5.6 mm (0.22 inches)	
Ground speed	5.39 km/h (3.35 mph)						4.80 km/h (2.98 mph)					

Servicing the Bedbar

Removing the Bedbar

1. Turn the bedbar-adjuster screw counterclockwise to back the bedknife away from the reel (Figure 55).

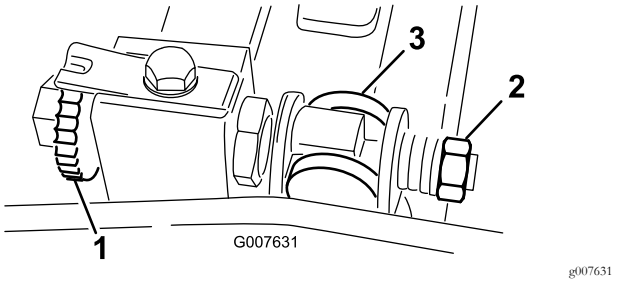

g007631

Figure 55

1. Bedbar-adjusting screw
2. Spring-tension nut
3. Bedbar

2. Back out the spring-tension nut until the washer is no longer tensioned against the bedbar (Figure 55).

3. At each side of the machine, loosen the jam nut securing the bedbar bolt (Figure 56).

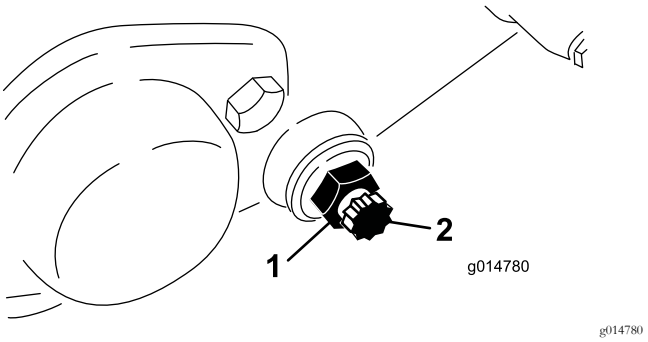

g014780

Figure 56

1. Jam nut
2. Bedbar bolt

4. Remove each bedbar bolt allowing the bedbar to be pulled downward and removed from the machine. Save the 2 nylon and 2 stamped steel washers on each end of the bedbar (Figure 56).

Installing the Bedbar

1. Install the bedbar, positioning the mounting ears between the washer and the bedbar adjuster.
2. Secure the bedbar to each side plate with the bedbar bolts (jam nuts on the bolts) and 8 washers.

   Note: Position a nylon washer on each side of the side plate boss. Place a steel washer outside each of the nylon washers.
3. Torque the bolts to 27 to 36 N·m (20 to 27 ft-lb).
4. Tighten the jam nuts until the outside thrust washers just rotate freely.
5. Tighten the spring-tension nut until the spring is collapsed, then back it off 1/2 turn.
6. Adjust the bedbar; refer to Adjusting the Bedknife to the Reel (page 31).

Backlapping the Reel

1. Remove the plug in the right reel-drive cover (Figure 57).

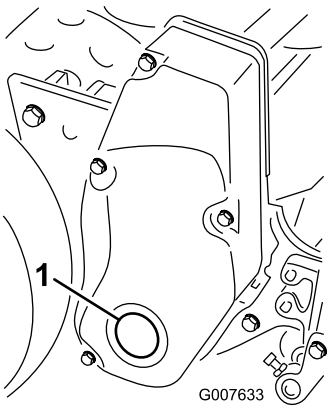

g007633

Figure 57

1. Cover plug

2. Insert a 1/2 inch-drive extension bar, connected to the backlapping machine, into the square hole in the center of the reel pulley.
3. Backlap according to the procedure in the Toro *Sharpening Reel and Rotary Mowers Manual*, Form 80-300 PT.

⚠ DANGER

Contact with the reel or other moving parts can result in personal injury.

- **Stay away from the reel while backlapping.**
- **Never use a short-handled paint brush for backlapping. Handle assembly Part No. 29-9100 is available—complete or as individual parts—from your local Authorized Toro Distributor.**

Note: For a better cutting edge, run a file across the front face of the bedknife when the lapping operation is completed. This removes any burrs or rough edges that may have built up on the cutting edge.

4. Install the plug in the cover when you complete this procedure.

Storage

1. Remove grass clippings, dirt, and grime from the external parts of the entire machine, especially the engine. Clean dirt and chaff from the outside of the cylinder-head fins and the blower housing.

   Important: You can wash the machine with mild detergent and water. Do not pressure wash the machine. Avoid excessive use of water, especially near the shift lever plate and engine.

2. For long-term storage (more than 90 days) add stabilizer/conditioner additive to the fuel in the tank.

   A. Run the engine to distribute conditioned fuel through the fuel system (5 minutes).

   B. Either shut off the engine, allow it to cool, and drain the fuel tank, or operate the engine until it shuts off.

   C. Start the engine and run it until it shuts off. Start the engine again, with the choke closed, until the engine will not start.

   D. Dispose of the fuel properly. Recycle it according to local codes.

      Note: Do not store stabilizer/conditioned gasoline over 90 days.

3. Check and tighten all bolts, nuts, and screws. Repair or replace any part that is damaged or worn.

4. Paint all scratched or bare metal surfaces. Paint is available from your Authorized Service Dealer.

5. Store the machine in a clean, dry garage or storage area. Cover the machine to protect it and keep it clean.

European Privacy Notice

The Information Toro Collects
Toro Warranty Company (Toro) respects your privacy. In order to process your warranty claim and contact you in the event of a product recall, we ask you to share certain personal information with us, either directly or through your local Toro company or dealer.

The Toro warranty system is hosted on servers located within the United States where privacy law may not provide the same protection as applies in your country.

BY SHARING YOUR PERSONAL INFORMATION WITH US, YOU ARE CONSENTING TO THE PROCESSING OF YOUR PERSONAL INFORMATION AS DESCRIBED IN THIS PRIVACY NOTICE.

The Way Toro Uses Information
Toro may use your personal information to process warranty claims, to contact you in the event of a product recall and for any other purpose which we tell you about. Toro may share your information with Toro's affiliates, dealers or other business partners in connection with any of these activities. We will not sell your personal information to any other company. We reserve the right to disclose personal information in order to comply with applicable laws and with requests by the appropriate authorities, to operate our systems properly or for our own protection or that of other users.

Retention of your Personal Information
We will keep your personal information as long as we need it for the purposes for which it was originally collected or for other legitimate purposes (such as regulatory compliance), or as required by applicable law.

Toro's Commitment to Security of Your Personal Information
We take reasonable precautions in order to protect the security of your personal information. We also take steps to maintain the accuracy and current status of personal information.

Access and Correction of your Personal Information
If you would like to review or correct your personal information, please contact us by email at legal@toro.com.

Australian Consumer Law

Australian customers will find details relating to the Australian Consumer Law either inside the box or at your local Toro Dealer.

The Toro Warranty

A Two-Year Limited Warranty

Conditions and Products Covered

The Toro Company and its affiliate, Toro Warranty Company, pursuant to an agreement between them, jointly warrant your Toro Commercial product ("Product") to be free from defects in materials or workmanship for two years or 1500 operational hours*, whichever occurs first. This warranty is applicable to all products with the exception of Aerators (refer to separate warranty statements for these products). Where a warrantable condition exists, we will repair the Product at no cost to you including diagnostics, labor, parts, and transportation. This warranty begins on the date the Product is delivered to the original retail purchaser.
* Product equipped with an hour meter.

Instructions for Obtaining Warranty Service

You are responsible for notifying the Commercial Products Distributor or Authorized Commercial Products Dealer from whom you purchased the Product as soon as you believe a warrantable condition exists. If you need help locating a Commercial Products Distributor or Authorized Dealer, or if you have questions regarding your warranty rights or responsibilities, you may contact us at:

Toro Commercial Products Service Department
Toro Warranty Company
8111 Lyndale Avenue South
Bloomington, MN 55420-1196

952–888–8801 or 800–952–2740
E-mail: commercial.warranty@toro.com

Owner Responsibilities

As the Product owner, you are responsible for required maintenance and adjustments stated in your *Operator's Manual*. Failure to perform required maintenance and adjustments can be grounds for disallowing a warranty claim.

Items and Conditions Not Covered

Not all product failures or malfunctions that occur during the warranty period are defects in materials or workmanship. This warranty does not cover the following:

- Product failures which result from the use of non-Toro replacement parts, or from installation and use of add-on, or modified non-Toro branded accessories and products. A separate warranty may be provided by the manufacturer of these items.
- Product failures which result from failure to perform recommended maintenance and/or adjustments. Failure to properly maintain your Toro product per the Recommended Maintenance listed in the *Operator's Manual* can result in claims for warranty being denied.
- Product failures which result from operating the Product in an abusive, negligent, or reckless manner.
- Parts subject to consumption through use unless found to be defective. Examples of parts which are consumed, or used up, during normal Product operation include, but are not limited to, brake pads and linings, clutch linings, blades, reels, rollers and bearings (sealed or greasable), bed knives, spark plugs, castor wheels and bearings, tires, filters, belts, and certain sprayer components such as diaphragms, nozzles, and check valves, etc.
- Failures caused by outside influence. Conditions considered to be outside influence include, but are not limited to, weather, storage practices, contamination, use of unapproved fuels, coolants, lubricants, additives, fertilizers, water, or chemicals, etc.
- Failure or performance issues due to the use of fuels (e.g. gasoline, diesel, or biodiesel) that do not conform to their respective industry standards.
- Normal noise, vibration, wear and tear, and deterioration.
- Normal "wear and tear" includes, but is not limited to, damage to seats due to wear or abrasion, worn painted surfaces, scratched decals or windows, etc.

Parts

Parts scheduled for replacement as required maintenance are warranted for the period of time up to the scheduled replacement time for that part. Parts replaced under this warranty are covered for the duration of the original product warranty and become the property of Toro. Toro will make the final decision whether to repair any existing part or assembly or replace it. Toro may use remanufactured parts for warranty repairs.

Deep Cycle and Lithium-Ion Battery Warranty:

Deep cycle and Lithium-Ion batteries have a specified total number of kilowatt-hours they can deliver during their lifetime. Operating, recharging, and maintenance techniques can extend or reduce total battery life. As the batteries in this product are consumed, the amount of useful work between charging intervals will slowly decrease until the battery is completely worn out. Replacement of worn out batteries, due to normal consumption, is the responsibility of the product owner. Battery replacement may be required during the normal product warranty period at owner's expense. Note: (Lithium-Ion battery only): A Lithium-Ion battery has a part only prorated warranty beginning year 3 through year 5 based on the time in service and kilowatt hours used. Refer to the *Operator's Manual* for additional information.

Maintenance is at Owner's Expense

Engine tune-up, lubrication, cleaning and polishing, replacement of filters, coolant, and completing recommended maintenance are some of the normal services Toro products require that are at the owner's expense.

General Conditions

Repair by an Authorized Toro Distributor or Dealer is your sole remedy under this warranty.

Neither The Toro Company nor Toro Warranty Company is liable for indirect, incidental or consequential damages in connection with the use of the Toro Products covered by this warranty, including any cost or expense of providing substitute equipment or service during reasonable periods of malfunction or non-use pending completion of repairs under this warranty. Except for the Emissions warranty referenced below, if applicable, there is no other express warranty. All implied warranties of merchantability and fitness for use are limited to the duration of this express warranty.

Some states do not allow exclusions of incidental or consequential damages, or limitations on how long an implied warranty lasts, so the above exclusions and limitations may not apply to you. This warranty gives you specific legal rights, and you may also have other rights which vary from state to state.

Note regarding engine warranty:

The Emissions Control System on your Product may be covered by a separate warranty meeting requirements established by the U.S. Environmental Protection Agency (EPA) and/or the California Air Resources Board (CARB). The hour limitations set forth above do not apply to the Emissions Control System Warranty. Refer to the Engine Emission Control Warranty Statement supplied with your product or contained in the engine manufacturer's documentation for details

Countries Other than the United States or Canada

Customers who have purchased Toro products exported from the United States or Canada should contact their Toro Distributor (Dealer) to obtain guarantee policies for your country, province, or state. If for any reason you are dissatisfied with your Distributor's service or have difficulty obtaining guarantee information, contact the Toro importer.

374-0253 Rev D