Form No. 3409-785 Rev A

TORO®

Count on it.

Parts Catalog

Z Master® Professional 5000 Series Riding Mower

with 72in TURBO FORCE® Side Discharge Mower

Model No. 74934—Serial No. 400000000 and Up

Register at www.Toro.com.
Original Instructions (EN)

3409-785 A

Ordering Replacement Parts

To order replacement parts, please supply the part number, the quantity, and the description of each part desired.

Understanding Reference Numbers

Each identified part in an illustration has a reference number. The reference number for a part also appears in the parts list, along with other information about the part.

This catalog uses two special reference number formats, one to indicate parts in a service assembly and another to indicate the quantity of a given part in an illustration.

Service Assembly Reference Numbers

Parts in service assemblies have reference numbers in the form a:b. The a represents the reference number of the entire service assembly and the b represents a sequential number unique to each part within the service assembly.

For example, a wheel assembly might be identified by reference number 6, the tire by 6:1, the valve by 6:2, and the wheel by 6:3. When you order the assembly identified by reference number 6, you receive all parts identified by reference numbers 6:1,6:2, and 6:3. However, you may also order any part individually. Reference numbers of this type appear in illustration and in parts lists.

Reference Numbers Indicating Quantity

In an illustration, if a reference number indicates more than one part, the reference number has the form nX y. The n represents the quantity of the part, the X is the multiplication symbol, and the y represents the reference number.

For example, in an illustration, the reference number 2X 37 means that two of the parts identified by reference number 37 are indicated.

Contents

Main Frame Assembly 4
Roll-Over Protection System Assembly No. 116-0231 6
Caster Fork and Wheel Assembly 8
Hydraulic Pump, Idler and Belt Assembly 10
Pump Idler Assembly No. 116-1255 12
LH Hydro Assembly No. 126-1323 14
RH Hydro Assembly No. 126-1324 16
Parking Brake and Wheel Assembly 18
LPG Valve and Tank Assembly 20
Seat Mount Assembly 22
Seat Assembly No. 125-3107 24
Motion Control Assembly 26
Console and Control Panel Assembly 28
Electrical System Assembly 30
Decklift Assembly 32
Height-of-Cut Assembly No. 109-7438 34
Engine, Clutch and Muffler Assembly 36
Deck Assembly 38
Deck Decal Assembly No. 114-5820 40
Idler Arm Assembly 42
Spindle Assembly No. 127-0560 44
Rubber Deflector Assembly No. 108-2792 46
Attachments and Accessories 48

© 2017—The Toro® Company
8111 Lyndale Avenue South
Bloomington, MN 55420

Contact us at www.Toro.com.
Printed in the USA.
All Rights Reserved

Main Frame Assembly

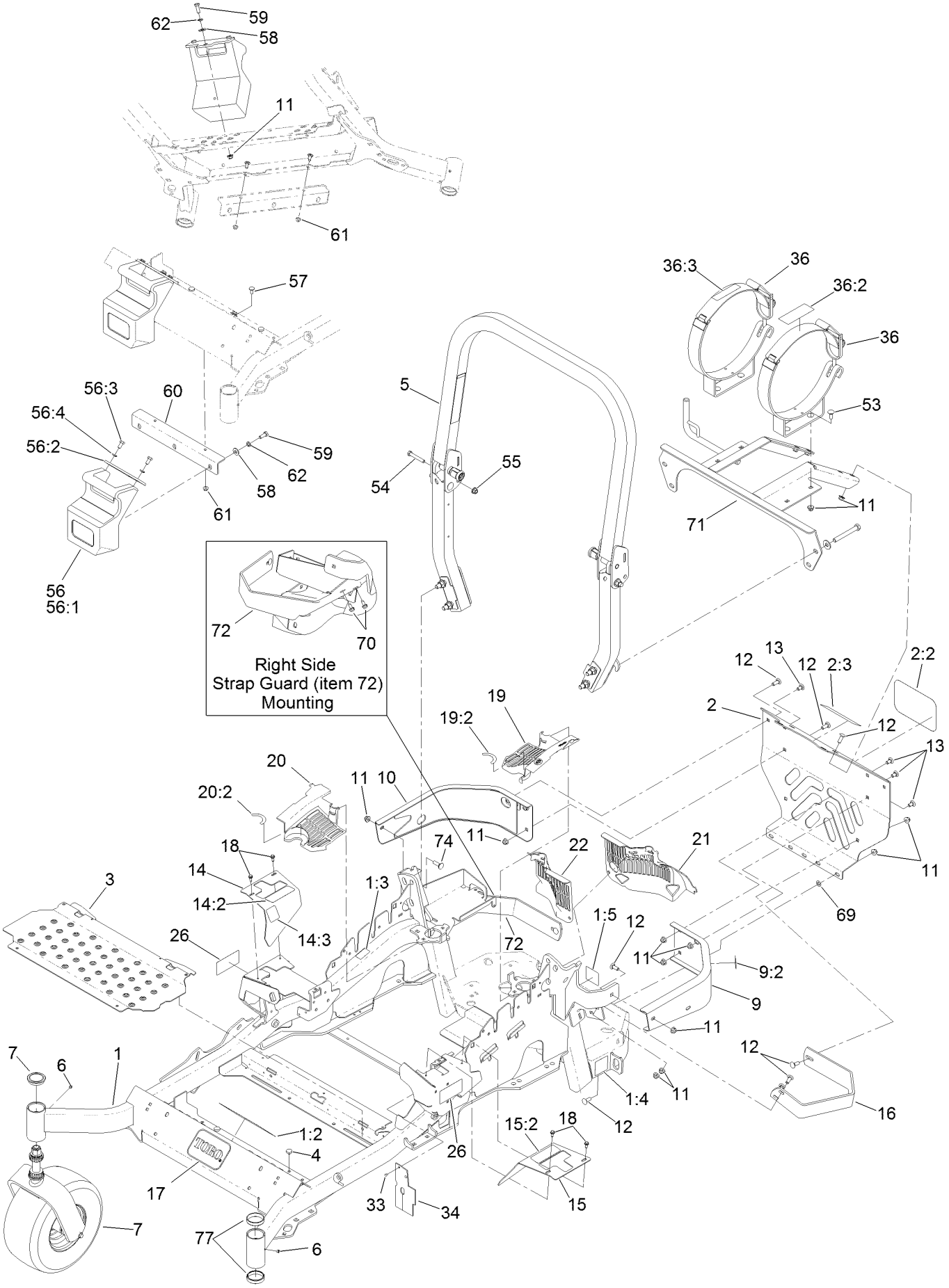

Main Frame Assembly (continued)

Ref.	Part Number	Qty.	Description
1	116-5904	1	Mainframe ASM
1:2	106-5517	2	Decal-Warning
1:3	132-0871	1	Decal-Danger
1:4	106-2655	2	Decal-Hazard, Pinched Finger
1:5	116-4858	1	Decal-Spark Arrester
2	127-0306	1	LPG Rear Guard ASM
2:2	67-7320	1	Decal
2:3	126-3277	1	Decal-LPG Fuel Tank Replacement
3	116-8898-01	1	Floorpan
4	1-513658	2	Bumper
5	116-0231	1	ROPS ASM
6	1-811010	2	Plug
7		2	Caster Wheel ASM ●
9	116-0180	1	LH Bumper ASM
9:2	106-5517	1	Decal-Warning
10	116-0057-03	1	Bumper-RH
11	104-8301	26	Nut-Flange, NI
12	3231-22	12	Screw-CARR
13	3231-21	4	Screw-CARR
14	116-5899	1	RH Motion Control Cover ASM
14:2	99-8936	1	Decal-Control, Motion
14:3	116-5988	1	Decal-Park Brake, CE
15	116-0580	1	LH Motion Control Cover ASM
15:2	99-8936	1	Decal-Control, Motion
16	126-2067-03	1	Guard-Muffler
17	68-3640	1	Decal
18	32144-10	4	Screw-HWH
19	116-0170	1	LH Hydro Guard ASM
19:2	116-8726	1	Decal-Oil, Hydro
20	116-0171	1	RH Hydro Guard ASM
20:2	116-8726	1	Decal-Oil, Hydro
21	109-9057	1	Guard-Hydro, Rear (LH)
22	109-9058	1	Guard-Hydro, Rear (RH)
26	120-5894	2	Decal
33	1-803035	2	Rivet-Pop
34	116-2362	1	Deflector-Air Flow
36	116-2817	1	Tank Bracket ASM (Set)
36:2	126-3275	1	Decal-LPG Warning
36:3	126-4553	1	Decal-LPG Tank Spec
53	3231-2	4	Bolt-CARR
54	325-13	1	Screw-HH
55	99-5107	1	Nut-Lock
56	120-7885	1	Weight ASM
56:1	120-7881	1	Weight-43 Lb
56:2	115-3616-01	1	Tab-Support, Weight
56:3	323-4	2	Screw-HH
56:4	3253-5	2	Washer-Lock
57	3230-23	2	Screw-CARR
58	3256-4	2	Washer-Flat
59	323-6	2	Screw-HH
60	115-3615-01	1	Bracket-Mount, Weight
61	104-8300	2	Nut-Flange, NI
62	3253-5	2	Washer-Lock
69	107-3154	2	Nut-Push
70	32144-70	2	Screw-HWHTF
71	116-3558-03	1	Support-LPG Tank
72	116-1432-03	1	Strap-Guard
74	3231-25	1	Bolt-CARR
77	1-543508	4	Cup-Bearing

● Not serviced separately

Roll-Over Protection System Assembly No. 116-0231

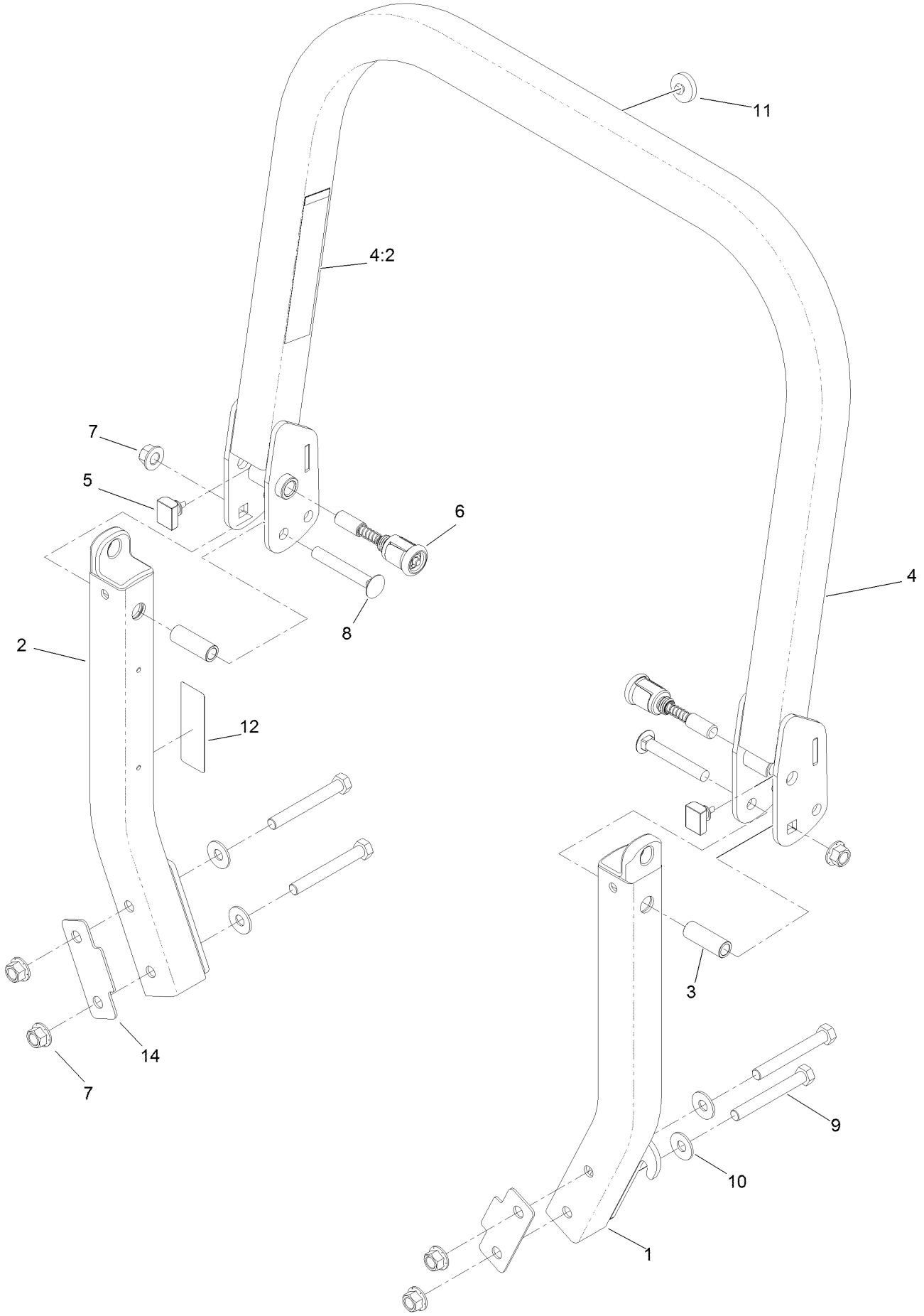

Roll-Over Protection System Assembly No. 116-0231 (continued)

Ref.	Part Number	Qty.	Description
1		1	Leg-ROPS, LH ●
2		1	Leg-ROPS, RH ●
3	109-6653	2	Spacer
4		1	Upper ROPS ASM ●
4:2	107-3069	1	Decal-Warning
5	109-5337	2	Bumper-ROPS
6	116-0104	2	Pin-Spring
7	99-5107	6	Nut-Lock
8	3233-10	2	Screw-CARR
9	325-35	4	Screw-HH
10	109-9505	4	Washer-Spring
11	109-9233	1	Bumper-Push-In, Rubber
12	117-0346	1	Decal-Caution, Fuel Vent
14	116-0960	2	Spacer

● Not serviced separately

Caster Fork and Wheel Assembly

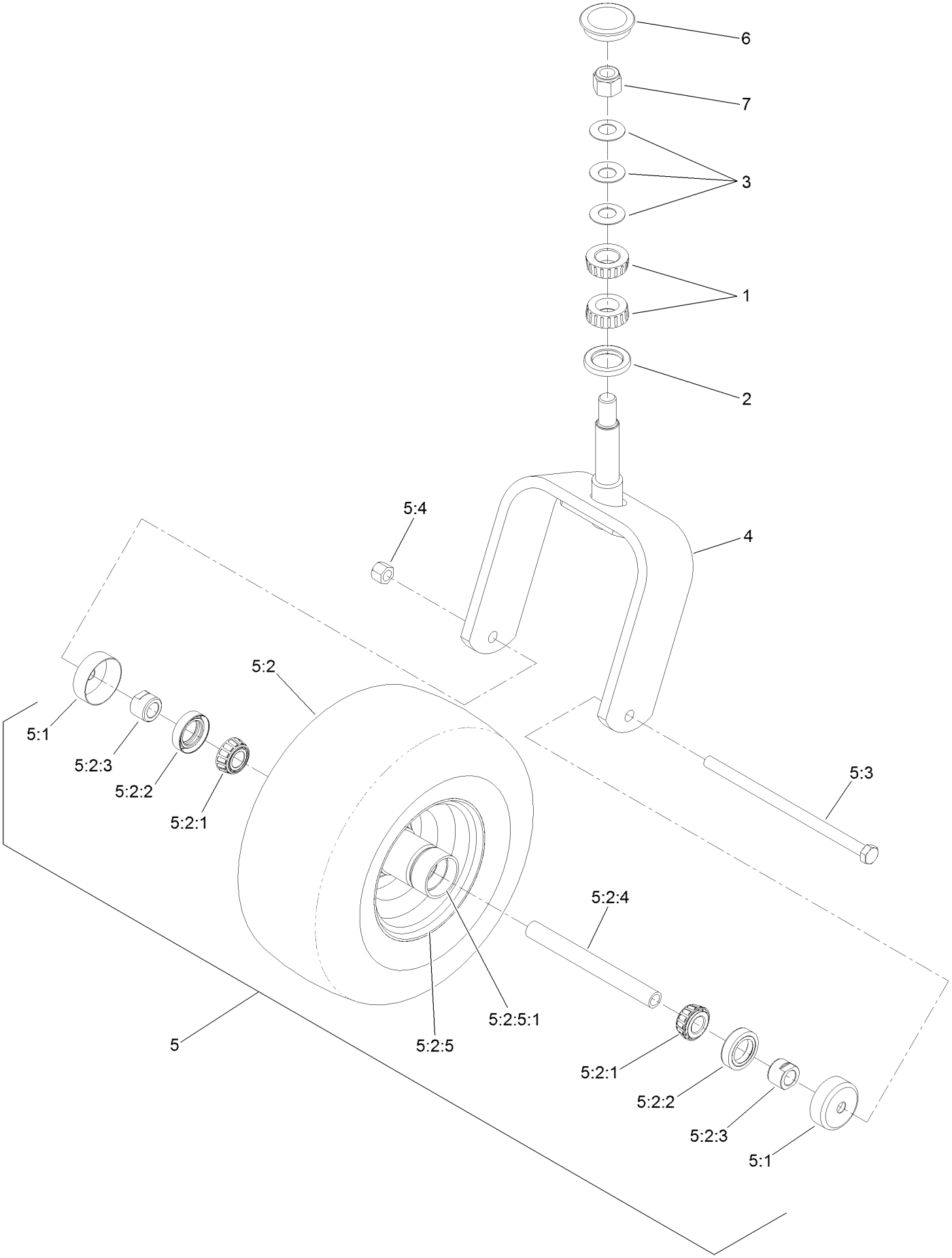

Caster Fork and Wheel Assembly (continued)

Ref.	Part Number	Qty.	Description
1	1-543509	2	Bearing-Roller, Tapered
2	116-5647	1	Seal-Grease
3	1-633508	3	Washer-Bellville
4	116-6707-01	1	Caster
5	127-9528	1	Wheel And Axle ASM
5:1	103-2768	2	Guard-Seal
5:2		1	Wheel And Bearing ASM ●
5:2:1	1-633585	2	Bearing-Cone, Taper
5:2:2	103-0063	2	Seal-Caster
5:2:3	103-3051	1	Spacer-Nut ■
5:2:4	126-5361	1	Axle Caster ASM
5:2:5		1	Wheel And Tire ASM ●
5:2:5:1	1-633584	2	Bearing-Cup
5:3	325-39	1	Screw-HH
5:4	3296-23	1	Nut-Lock, NI
6	103-4882	1	Cap-Grease
7	3296-51	1	Nut-Lock, NI

● Not serviced separately
■ Use Pro-Lock, Nut Type (P/N 1-840022, .5ml tube) on threads.

Hydraulic Pump, Idler and Belt Assembly

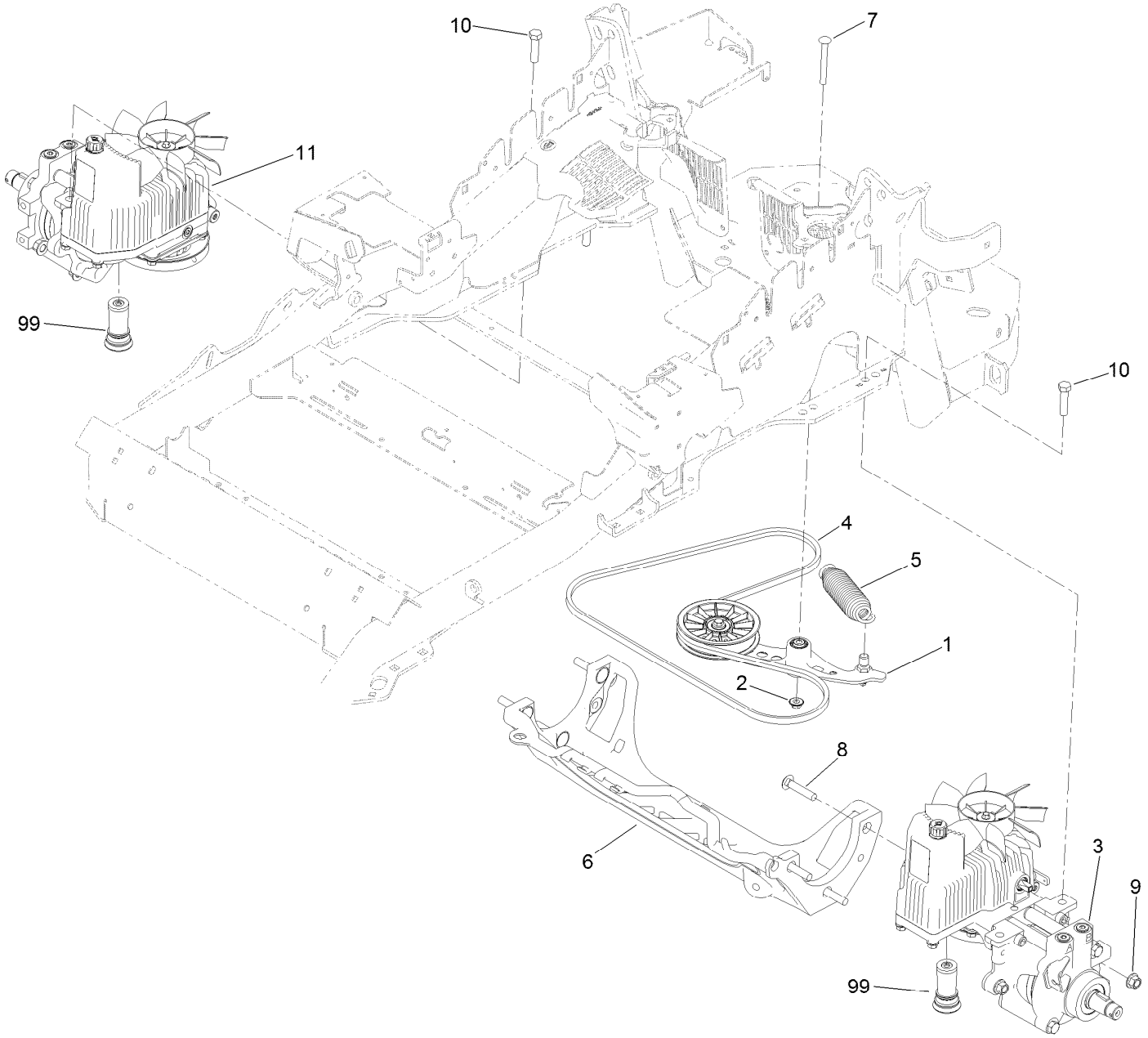

Hydraulic Pump, Idler and Belt Assembly (continued)

Ref.	Part Number	Qty.	Description
1	116-1255	1	Pump Idler ASM
2	109-6658	1	Nut-Flange, NI
3	126-1323	1	LH Hydro ASM (12Cc W/ Shock)
4	109-3388	1	Belt
5	116-6317	1	Spring-Extension
6	116-7558	1	Cradle-Hydro
7	116-1502	1	Bolt-Shoulder, Carriage
8	126-0095	6	Screw-CARR
9	99-5107	6	Nut-Lock
10	325-8	4	Screw-HH
11	126-1324	1	RH Hydro ASM (12Cc W/ Shock)
99	114-4713	1	Hypr-Oil 500 (Quart) ●
99	114-4714	1	Hypr-Oil 500 (Gallon) ●
99	114-4715	1	Hypr-Oil 500-5 (5 Gallon) ●
99	117-0390	1	Filter-Hydro

● Not illustrated

Pump Idler Assembly No. 116-1255

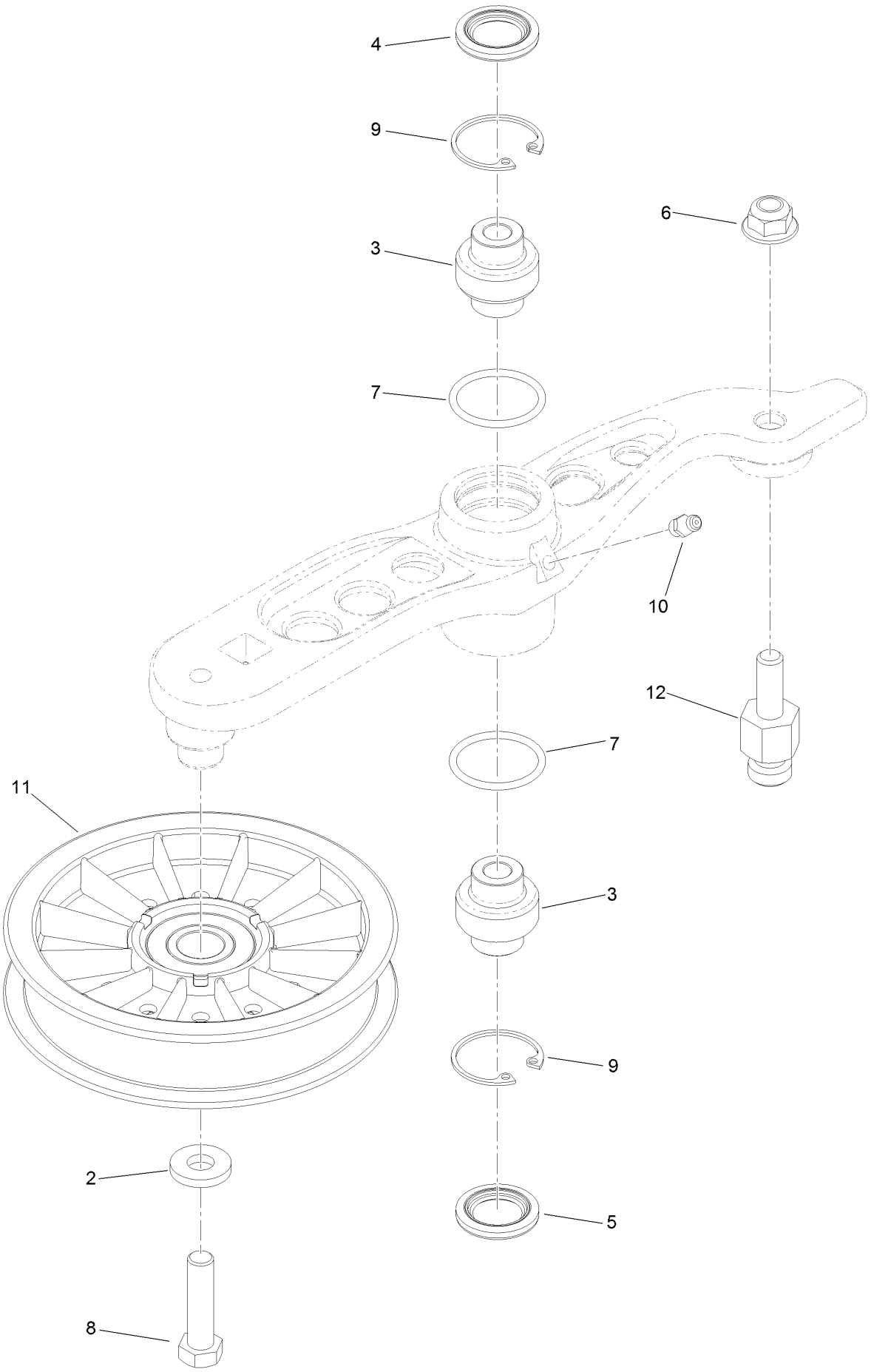

Pump Idler Assembly No. 116-1255 (continued)

Ref.	Part Number	Qty.	Description
2	43-0940	1	Spacer
3	103-3504	2	Bearing-Spherical
4	103-3505	1	Seal-Double Lip
5	103-3506	1	Seal-Lip, Single
6	109-6658	1	Nut-Flange, NI
7	106-7159	2	O-Ring
8	323-8	1	Screw-HH
9	32120-10	2	Ring-Snap
10	302-19	1	Fitting-Grease
11	109-8076	1	Pulley-Idler
12	132-4724	1	Pin-Anchor, Spring

LH Hydro Assembly No. 126-1323

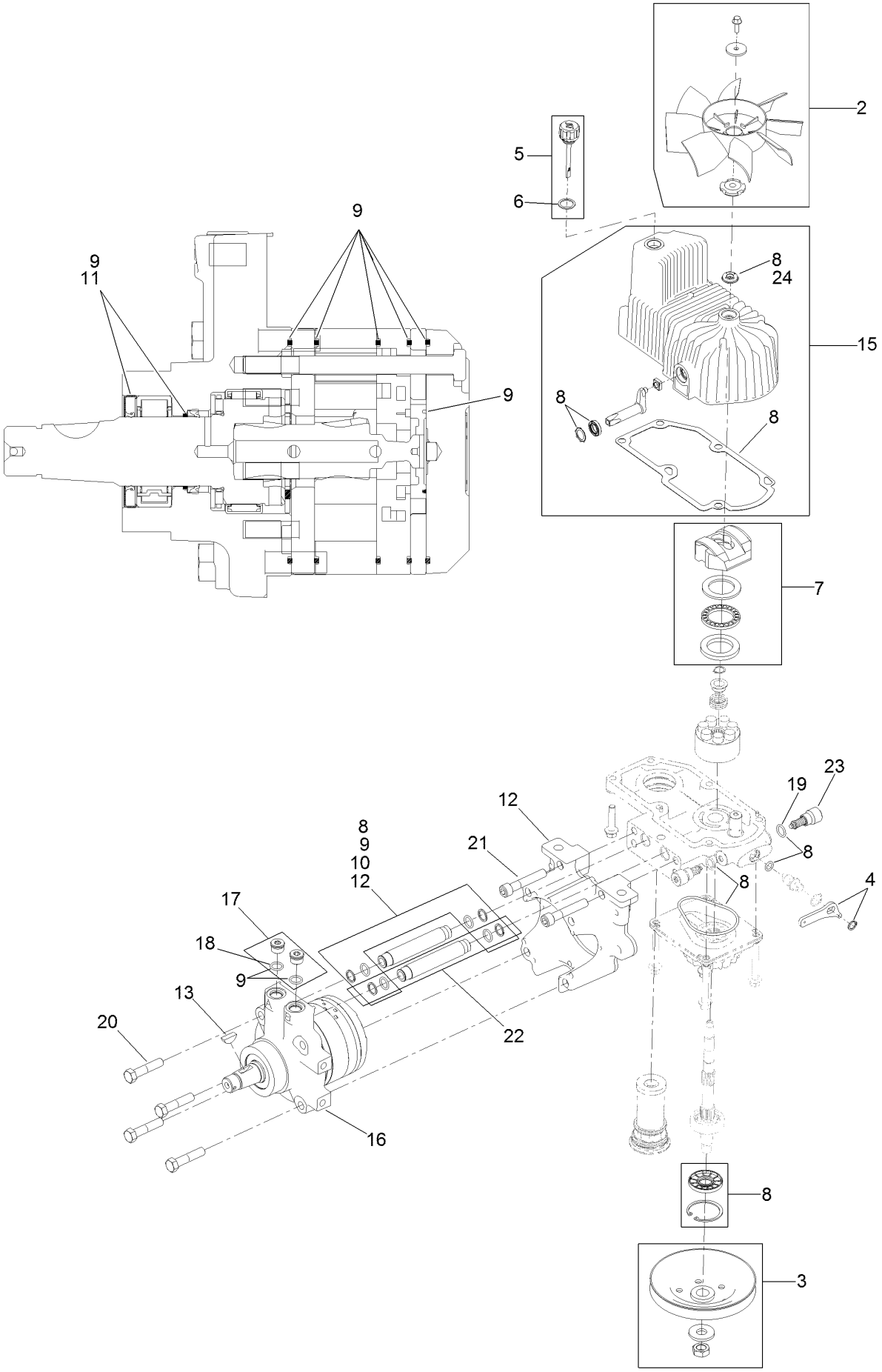

LH Hydro Assembly No. 126-1323 (continued)

Ref.	Part Number	Qty.	Description
2	116-0233	1	Fan Kit
3	116-0234	1	Pulley Kit
4	116-0235	1	Handle-Bypass Valve, Hydro
5	116-0236	1	Dipstick-Hydro W/Gasket
6	116-0237	1	Gasket-Dipstick, Hydro
7	116-1367	1	Swash Block Kit
8	116-1368	1	Pump Seal Kit
9	116-1369	1	Motor Seal Kit
10	116-1370	1	Tube Seal Kit
11	116-1371	1	Output Shaft Seal Kit
12	116-5469	1	Nose Cup-Uht
13	3257-42	1	Key-Woodruff
15	116-3287	1	Housing-LH
16	116-8915	1	Motor-Hydraulic LH 240Cc
17	116-7901	1	Magnetic Plugs Service Kit
18	76-1900	2	O-Ring
19	116-8662	2	O-Ring-Check Valve
20	116-8974	4	Screw HH
21	116-8975	2	Screw-HSH
22	116-9922	2	Hydraulic Tube Kit
23	126-7466	2	Shock Valve, 12Cc Hydro
24	126-7711	1	Seal-Fan Drive
99	116-4245	1	Puller-Pulley ●
99	116-1373	1	Flow Test Kit ●

● Not illustrated

RH Hydro Assembly No. 126-1324

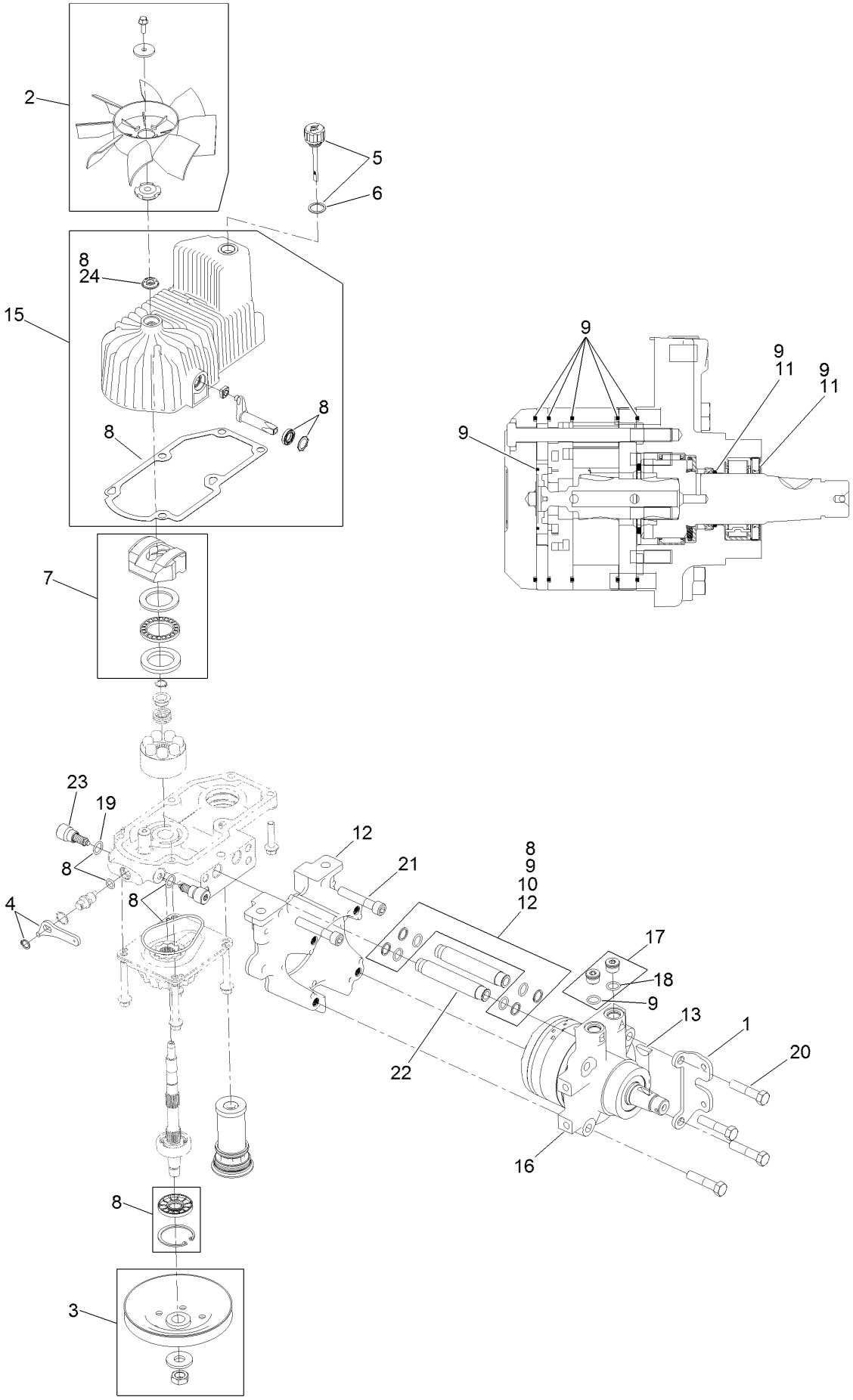

RH Hydro Assembly No. 126-1324 (continued)

Ref.	Part Number	Qty.	Description
1	116-9063	1	Mount-Shoe, Horse
2	116-0233	1	Fan Kit
3	116-0234	1	Pulley Kit
4	116-0235	1	Handle-Bypass Valve, Hydro
5	116-0236	1	Dipstick-Hydro W/Gasket
6	116-0237	1	Gasket-Dipstick, Hydro
7	116-1367	1	Swash Block Kit
8	116-1368	1	Pump Seal Kit
9	116-1369	1	Motor Seal Kit
10	116-1370	1	Tube Seal Kit
11	116-1371	1	Output Shaft Seal Kit
12	116-5469	1	Nose Cup-Uht
13	3257-42	1	Key-Woodruff
15	116-3288	1	Housing-RH
16	116-8916	1	Motor-Hydraulic RH 240Cc
17	116-7901	1	Magnetic Plugs Service Kit
18	76-1900	2	O-Ring
19	116-8662	2	O-Ring-Check Valve
20	116-8974	4	Screw HH
21	116-8975	2	Screw-HSH
22	116-9922	2	Hydraulic Tube Kit
23	126-7466	2	Shock Valve, 12Cc Hydro
24	126-7711	1	Seal-Fan Drive
99	116-4245	1	Puller-Pulley ●
99	116-1373	1	Flow Test Kit ●

● Not illustrated

Parking Brake and Wheel Assembly

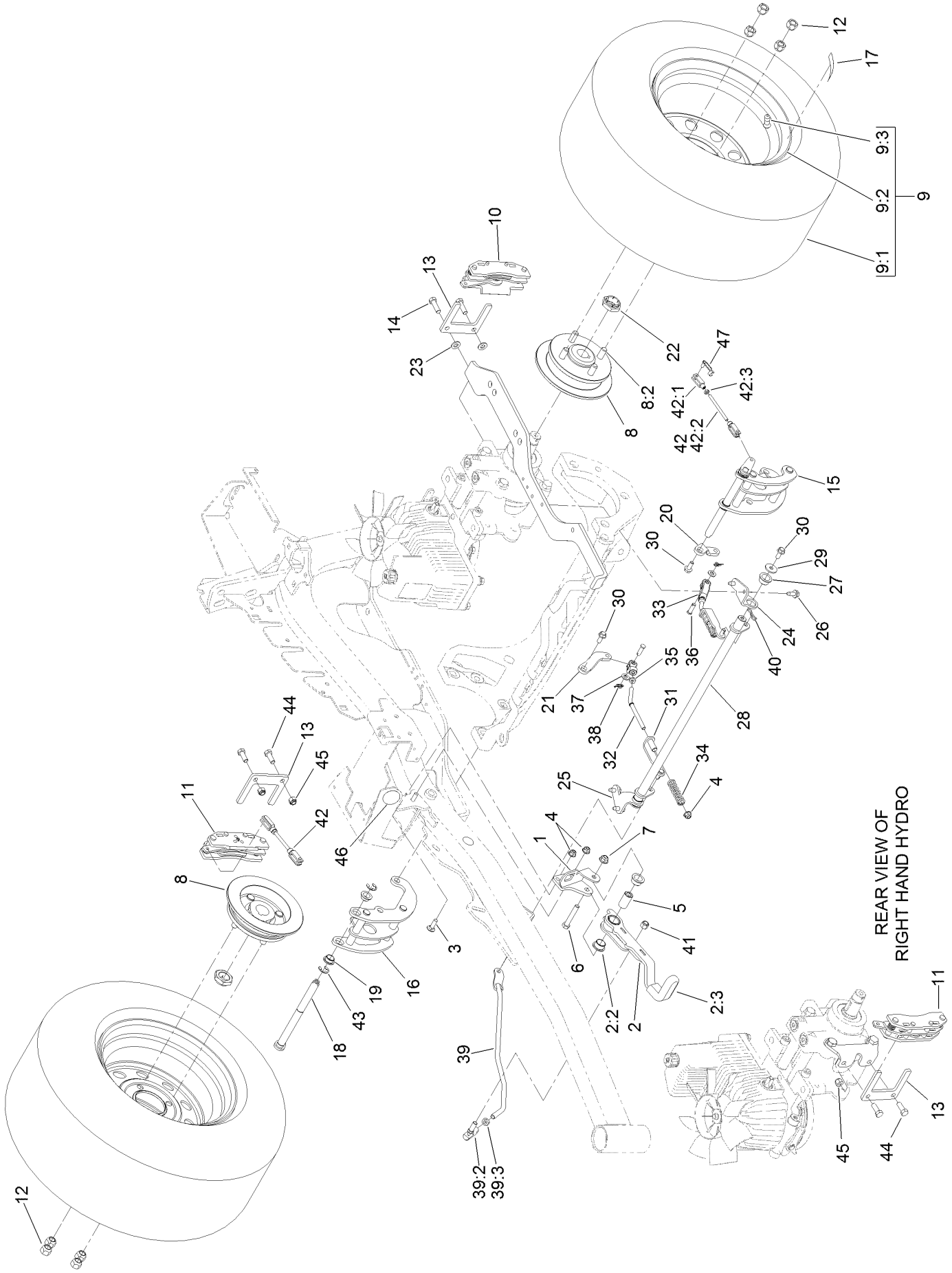

Parking Brake and Wheel Assembly (continued)

Ref.	Part Number	Qty.	Description
1	116-9096-01	1	Bracket-Mount
2	126-0970	1	Brake Lever ASM
2:2	109-8054	2	Bushing-Flange
2:3	1-633268	1	Grip-Lever
3	3230-2	2	Bolt-CARR
4	104-8300	4	Nut-Flange, NI
5	116-9117	1	Handle-Pivot, Brake
6	323-11	1	Screw-HH
7	104-8301	1	Nut-Flange, NI
8	116-1746	2	Wheel Hub ASM
8:2	116-1696	4	Stud-Wheel
9	127-9521	2	Wheel And Tire ASM
9:1	1-633993	1	Tire
9:2	127-9522	1	Wheel
9:3	232-27	1	Stem-Valve
10	109-2889	1	Caliper-Brake
11	116-9103	1	Caliper-Brake, RH
12	242-50	8	Nut-Lug
13	109-0958	2	Plate-Mount, Brake
14	92-5727	2	Screw-Lock, Patch
15	126-4248	1	Mount-Bellcrank, LH
16	126-4249	1	Mount-Bellcrank, RH
17	126-2055	2	Decal-Torque, Wheel Hub Lug
18	126-4251	2	Bellcrank
19	126-6199	4	Bushing-Igus
20	126-3715	1	Arm-Inner, LH
21	126-3716	1	Arm-Inner, RH
22	116-1399	2	Locknut
23	3256-24	2	Washer-Flat
24	116-9681	1	Mount-Pivot, LH
25	116-9682	1	Mount-Pivot, RH
26	32144-70	4	Screw-HWHTF
27	109-8054	2	Bushing-Flange
28	116-9080	1	Shaft-Cross
29	115-7109	2	Washer-Flat
30	98-9940	4	Screw
31	116-9609	2	Bracket-L
32	116-9086	2	Linkage-Mid
33	126-3693	2	Yoke-Offset
34	116-9085	2	Spring-Compression
35	3220-2	2	Nut-Jam
36	1-808280	2	Pin-Clevis
37	3256-23	4	Washer-Flat
38	116-6639	2	Pin-Cotter, Locking
39	116-9102	1	Front Linkage ASM
39:2	94-7572	1	End-Tie Rod, RH
39:3	3220-3	1	Nut-HJ
40	119-1415	2	Pin-Cotter, Locking
41	3296-6	1	Nut-Lock
42	126-7587	2	Rear Linkage ASM
42:1	126-7588	2	Yoke
42:2	116-9069	1	Linkage, Rear
42:3	3220-1	1	Nut-Jam
43	32120-19	2	E-Ring
44	323-6	2	Screw-HH
45	3296-39	2	Nut-Lock, NI
46	126-6200	2	Spacer
47	126-6395	4	Pin-Clevis, Spring

LPG Valve and Tank Assembly

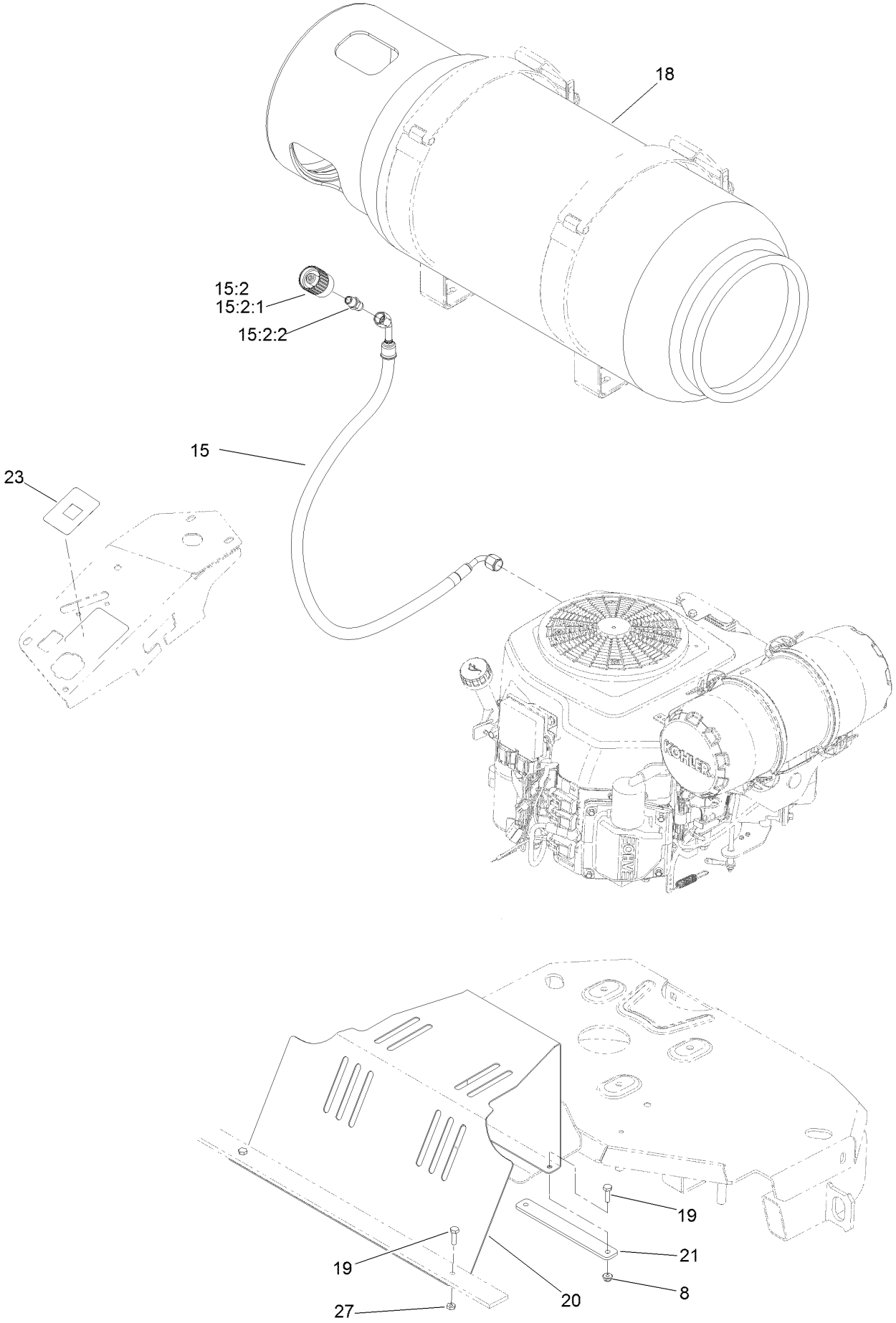

LPG Valve and Tank Assembly (continued)

Ref.	Part Number	Qty.	Description
8	104-7201	2	Nut-Flange, NI
15	126-8402	1	LPG Hose ASM
15:2		1	Connector-LP, Straight ●
15:2:1	116-1073	1	Connector-LPG Tank, LH Thread
15:2:2	116-1155	1	Fitting-Str

Ref.	Part Number	Qty.	Description
18	126-4507	1	Tank-LPG
19	321-5	4	Screw-HH
20	116-3358-03	1	Sheild-Fan
21	116-3359-03	1	Strap
23	116-3446	1	Decal-Meter, Hour
27	3218-1	1	Nut-Jam

● Not serviced separately

Seat Mount Assembly

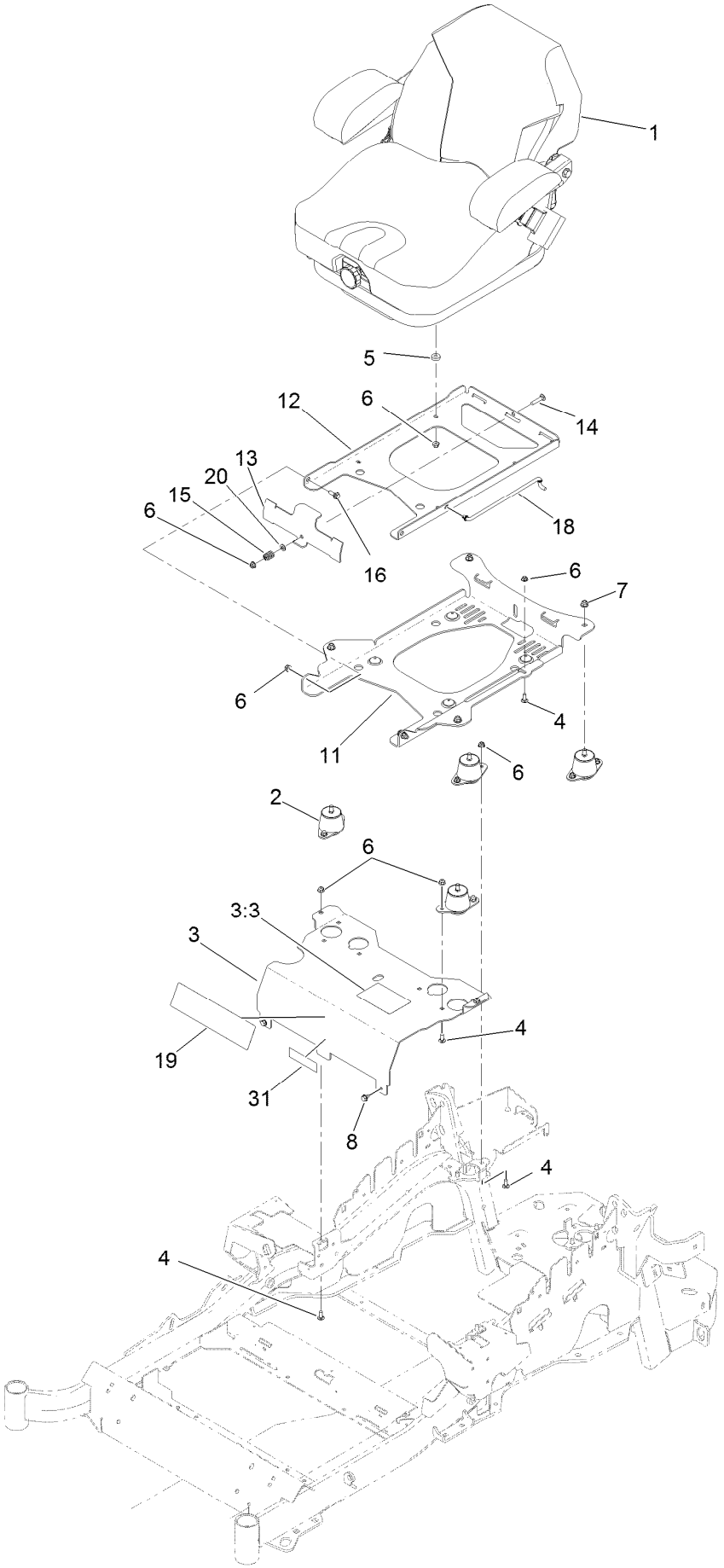

Seat Mount Assembly (continued)

Ref.	Part Number	Qty.	Description
1	125-3107	1	Suspension Seat ASM
2	109-9034	4	Isolator-Seat
3	127-0320	1	Seat Mount ASM
3:3	125-9383	1	Decal-Service Aid
4	3230-23	11	Screw-CARR
5	26-4840	4	Spacer-Pin, Mounting
6	104-8300	18	Nut-Flange, NI
7	104-8301	4	Nut-Flange, NI
8	9266934	2	Screw
11	116-3860-03	1	Plate-Tilt, Seat Support
12	116-3859-03	1	Plate-Frame, Seat
13	109-9881-03	1	Plate-Latch, Seat
14	3230-4	1	Screw-CARR
15	107-3017	1	Spring-Compression
16	116-1297	2	Screw-Shoulder
18	116-0070	1	Rod-Prop
19	119-2507	1	Decal
20	3256-23	1	Washer-Flat
31	127-0308	1	Decal-Efi Propane

Seat Assembly No. 125-3107

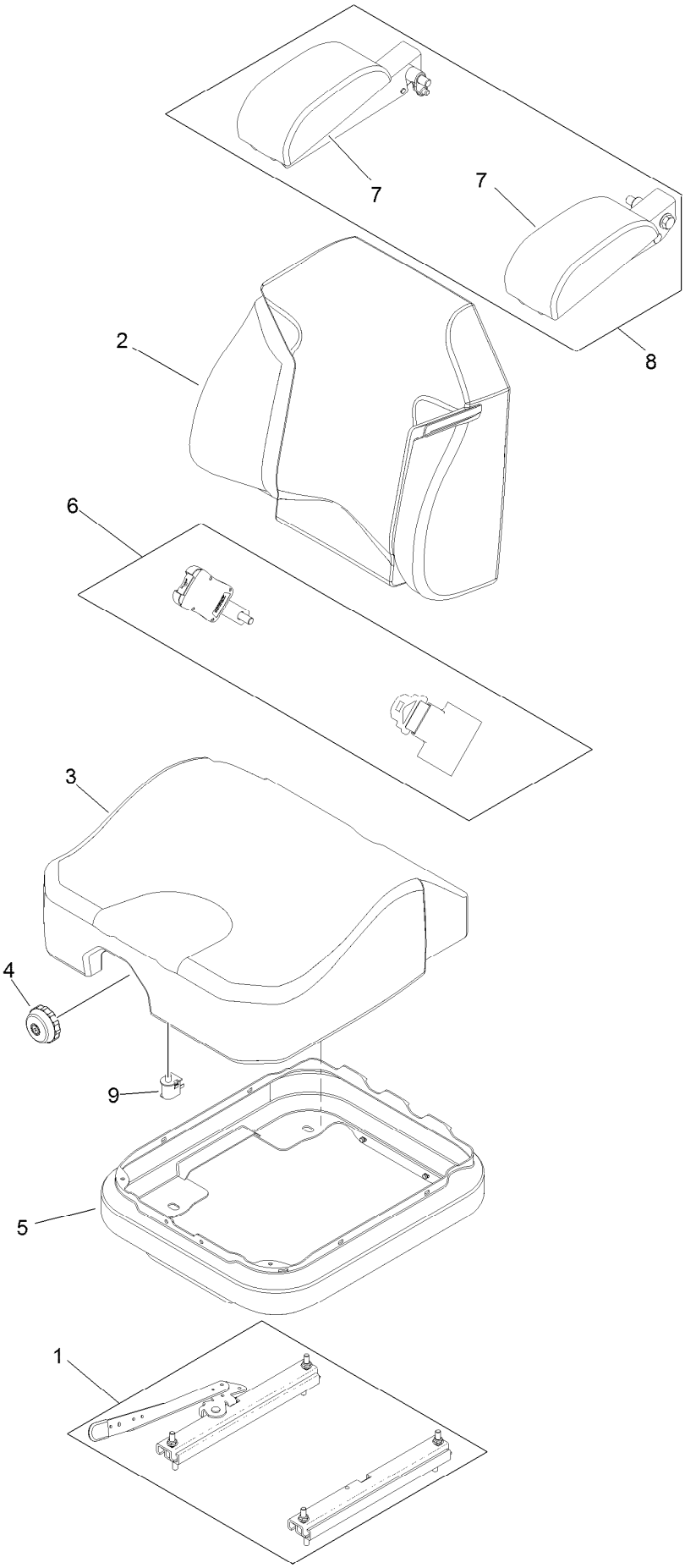

Seat Assembly No. 125-3107 (continued)

Ref.	Part Number	Qty.	Description
1	116-8910	1	Seat Track Set
2	125-3112	1	Cover-Back
3	125-3111	1	Cover-Cushion
4	116-8911	1	Knob-Adjuster
5	116-5659	1	Cover-Suspension Bellows
6	126-2061	1	Seat Belt Service Kit
7	109-9802	1	Arm Rest Pad Set
8	109-9803	1	Arm Rest Set
9	82-2190	1	Switch-Bail

Motion Control Assembly

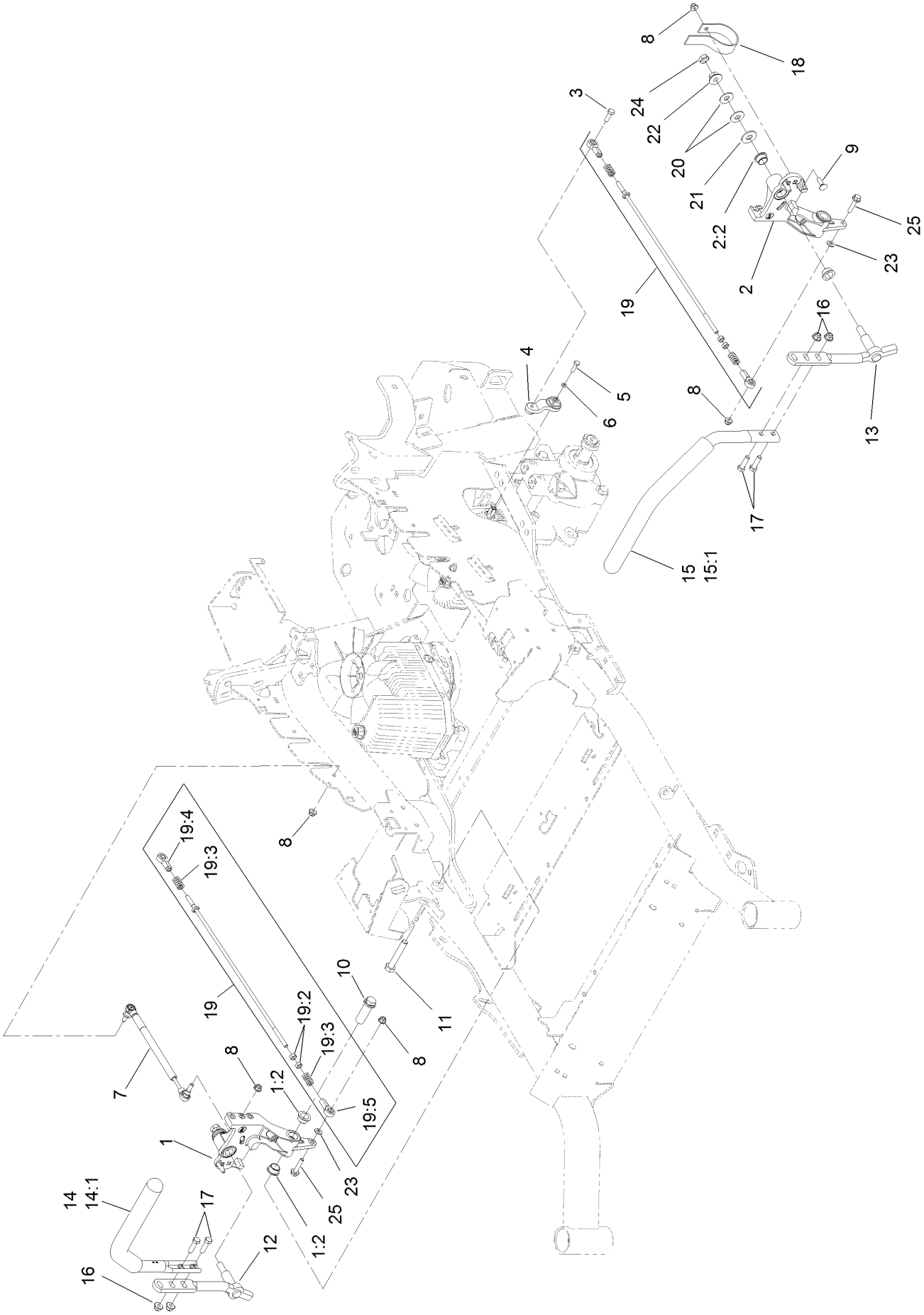

Motion Control Assembly (continued)

Ref.	Part Number	Qty.	Description
1	116-0880	1	RH Motion Control And Bushing ASM
1:2	109-8054	4	Bushing-Flange
2	116-0881	1	LH Motion Control And Bushing ASM
2:2	109-8054	4	Bushing-Flange
3	116-0648	2	Screw-HH, Thread Locking ●
4	109-4581	2	Arm-Control, Pump
5	9080046	2	Screw-HH ●
6	1-303435	2	Washer-Spring
7	116-0027	2	Damper-Control, Motion
8	104-8300	8	Nut-Flange, NI
9	3230-2	2	Bolt-CARR
10	109-5891	2	Hub-Threaded
11	325-12	2	Screw-HH
12	116-0039	1	Lever-Control Motion, RH
13	116-0040	1	Lever-Control Motion, LH

Ref.	Part Number	Qty.	Description
14	109-6589	1	RH Steering Handle ASM
14:1	109-5668	1	Grip-Control, Lever
15	109-6590	1	LH Steering Handle ASM
15:1	109-5668	1	Grip-Control, Lever
16	104-8301	4	Nut-Flange, NI
17	323-7	4	Screw-HH
18	109-5575	2	Spring-Leaf
19	109-8106	2	Front Pump Linkage ASM
19:2	3219-2	2	Nut-Hex
19:3	1-323245	2	Spring-Compression
19:4	1-633152	1	Balljoint-LH
19:5	1-543017	1	Balljoint-RH
20	109-9505	4	Washer-Spring
21	3256-6	2	Washer-Flat
22	32128-56	2	Nut-HF
23	3256-23	2	Washer-Flat
24	3218-5	2	Nut-Jam
25	115-1794	2	Screw-HHF

● Use Pro-Lock, Nut Type (P/N 1-840022, .5ml tube) on threads.

Console and Control Panel Assembly

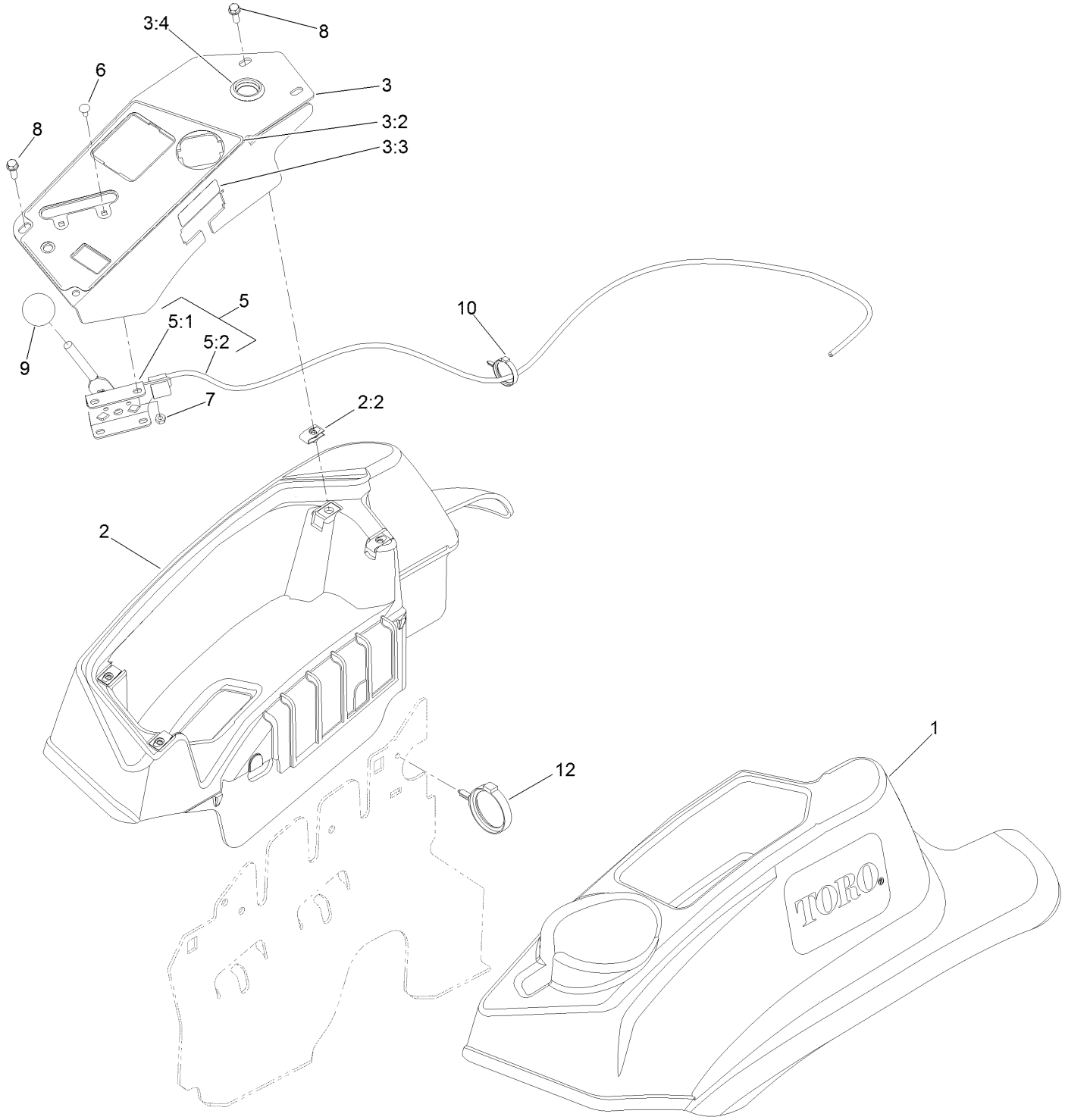

Console and Control Panel Assembly (continued)

Ref.	Part Number	Qty.	Description
1	119-2602	1	Console-LH
2	119-2603	1	RH Console ASM
2:2	107069	4	Clip
3	121-7587	1	Control Panel W/Decal ASM
3:2	121-7586	1	Decal-Panel, Control
3:3	114-4466	1	Decal-Fuses
3:4	116-1875	1	Plug-Plastic
5	115-2752	1	Throttle Control ASM

Ref.	Part Number	Qty.	Description
5:1	112-2334	1	Lever-Throttle
5:2	115-3868	1	Cable-Throttle
6	1-807513	2	Bolt-CARR
7	3296-2	2	Nut-Lock, NI
8	32105-15	4	Screw-HWH
9	1-603175	1	Knob-Ball
10	105-1853	1	Clamp-Hose
12	117-7817	1	Clamp-Harness

Electrical System Assembly

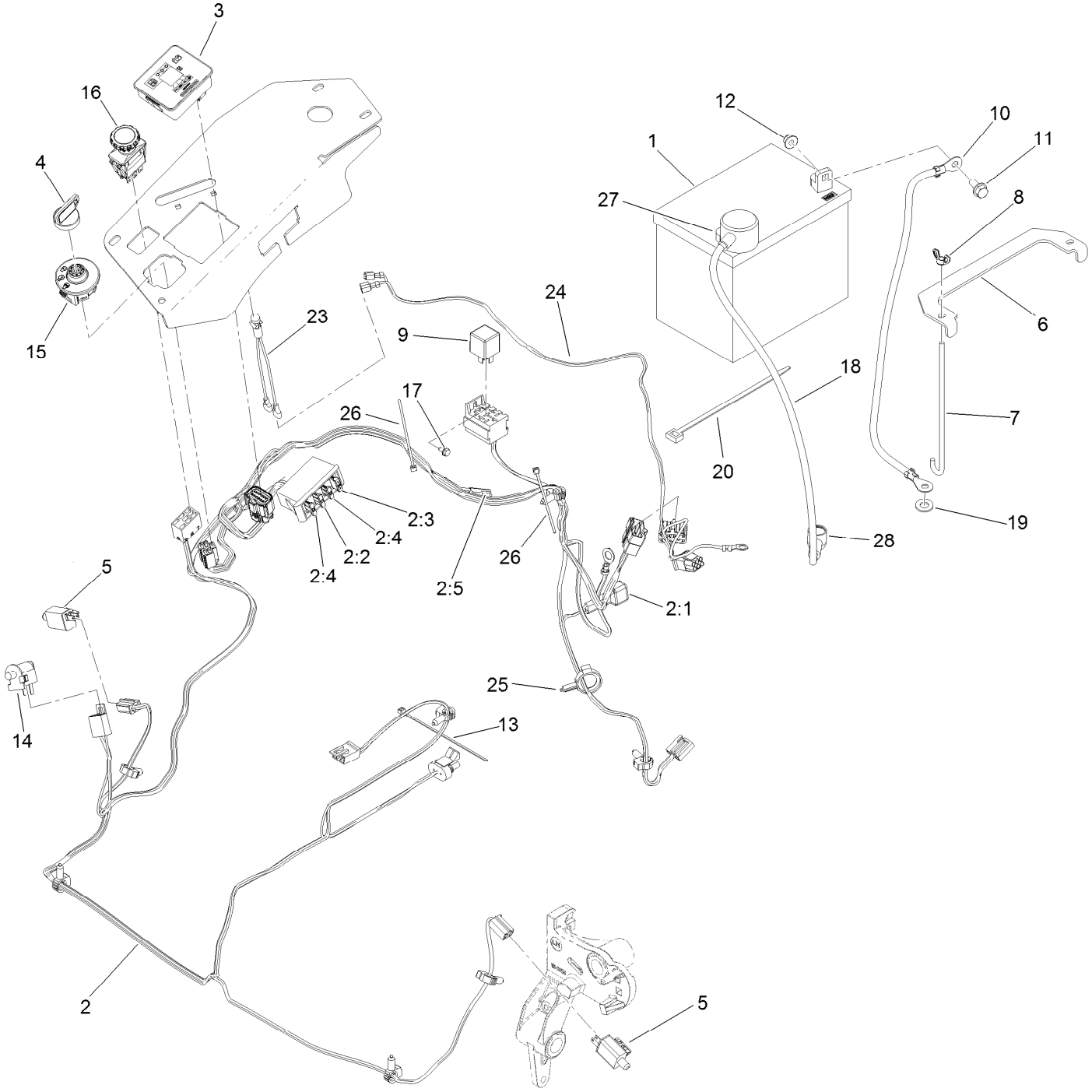

Electrical System Assembly (continued)

Ref.	Part Number	Qty.	Description
1		1	Battery (300 CCA, Wet) ●■
2	116-6009	1	Harness-Wire, Main ▲
2:1	103-3895	1	Diode
2:2	218-578	1	Fuse-Blade, 10 Amp
2:3	109355	1	Fuse-Blade, 15 Amp
2:4	109102	2	Fuse-Blade, 25 Amp
2:5	116-0053	1	Cap-Plug
3	117-3882	1	Fuel/Hour Meter ASM
4	63-8360	1	Key-Ignition
5	110-6765	2	Switch
6	116-0042-03	1	Strap-Tie Down, Battery
7	1-633651	2	Bolt-Holddown
8	1-543792	2	Wingnut
9	1-643275	1	Relay
10	114-1218	1	Cable-Battery, Negative
11	3234-5	2	Screw-HHF
12	104-8300	2	Nut-Flange, NI
13	1-303287	3	Tie-Cable
14	82-2190	1	Switch-Bail
15	117-2221	1	Switch-Ignition
16	116-0124	1	Switch-PTO, 10 Amp
17	104-2065	1	Screw-HWH
18	115-3864	1	Cable-Battery, Positive
19	3256-24	1	Washer-Flat
20	1-303335	1	Tie-Plastic
23	1-643267	1	Indicator-LED, Red
24	116-3062	1	Harness-Light, Indicator
25	105-1853	1	Clamp-Hose
26	1-303287	2	Tie-Cable
27	109-2407	1	Insulator-Battery
28	1-543393	1	Insulator-Solenoid

● Obtain locally.

■ Not serviced separately

▲ Use dielectric grease on all unsealed connectors and terminals only. Do not apply in sealed connectors.

Decklift Assembly

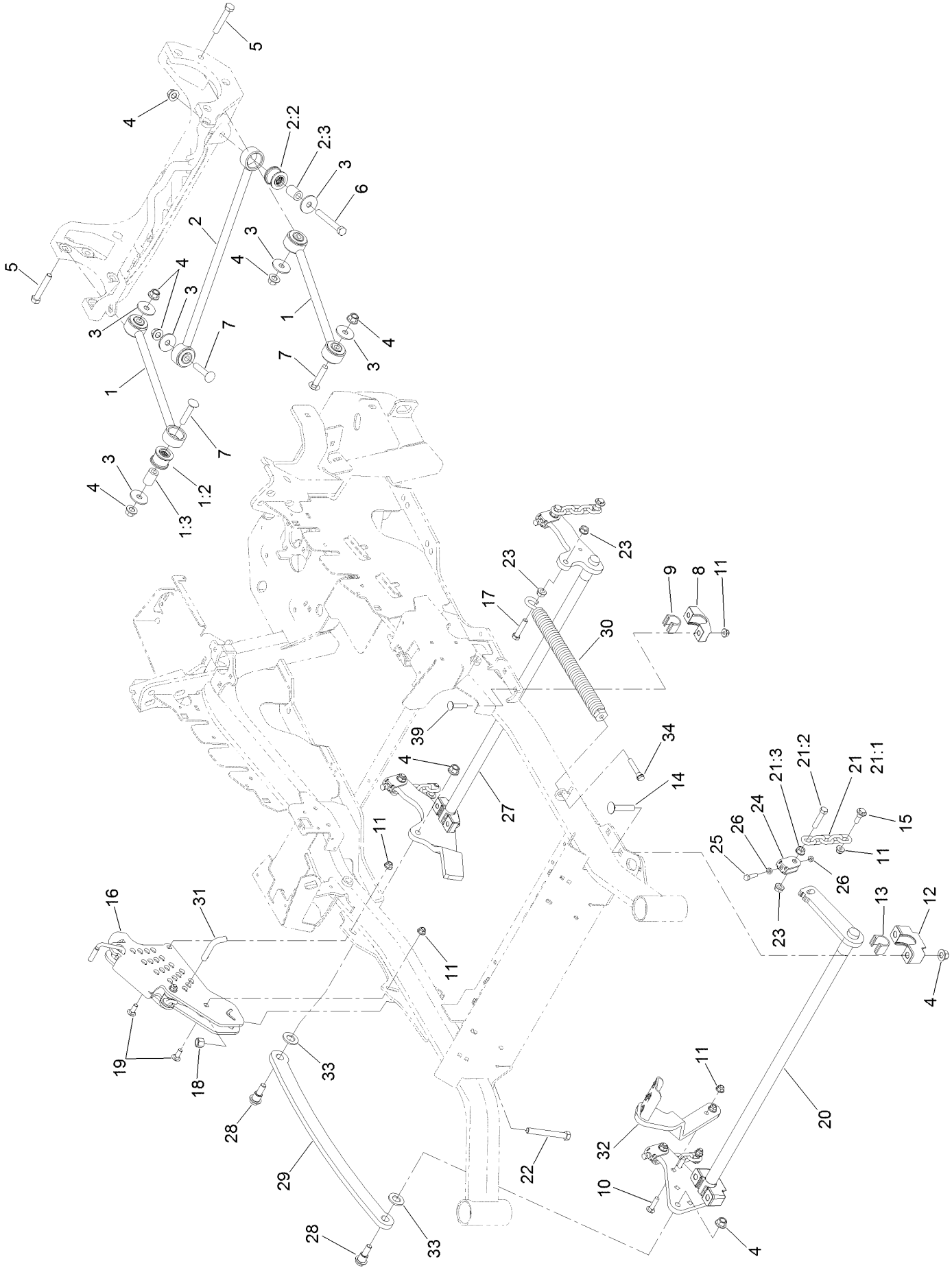

Decklift Assembly (continued)

Ref.	Part Number	Qty.	Description
1	109-7952	2	Deck Strut ASM
1:2	109-5009	2	Bushing-Suspension, Rubber
1:3	109-5010	2	Spacer
2	109-5013	1	Panhard Rod ASM
2:2	109-5009	2	Bushing-Suspension, Rubber
2:3	109-5010	2	Spacer
3	86-1990	6	Washer-Thrust
4	99-5107	12	Nut-Lock
5	325-12	2	Screw-HH
6	325-17	1	Screw-HH
7	3233-34	3	Screw-CARR
8	127-0553	2	Support-Cross Shaft, Bearing Rear
9	109-7173	2	Bearing-Cross Shaft, Rear
10	3231-4	2	Screw-CARR
11	104-8301	12	Nut-Flange, NI
12	109-9409	2	Support-Cross Shaft, Bearing
13	109-9410	2	Bearing-Cross Shaft, Front
14	116-1700	4	Bolt-CARR
15	109-9840	4	Screw-Shoulder, HHF
16	109-7438	1	HOC ASM
17	109-9065	1	Screw-HH
18	3296-23	1	Nut-Lock, NI
19	3231-2	2	Bolt-CARR
20	126-2475-03	1	Decklift-Front
21	116-0756	4	Deck Lift Chain ASM
21:1	1-633447	1	Chain-Lift, Deck
21:2	109-9065	1	Screw-HH
21:3	32128-37	1	Nut-HF
22	116-0559	1	Bolt-TAP
23	32128-37	6	Nut-HF
24	109-9066	4	Yoke-Adjust, Deck
25	322-47	4	Screw-HH
26	3218-2	8	Nut-Jam
27	116-0459-03	1	Lift-Deck, Rear
28	116-0780	2	Screw-Shoulder, HHF
29	116-0797-03	1	Link-Lift, Deck
30	116-0000	1	Spring-Extension
31	116-5584	1	Pin-HOC
32	116-1919-01	1	Lever-Foot
33	3256-28	2	Washer-Flat
34	92-7674	1	Bolt-Shoulder
39	3231-7	4	Screw-CARR

Height-of-Cut Assembly No. 109-7438

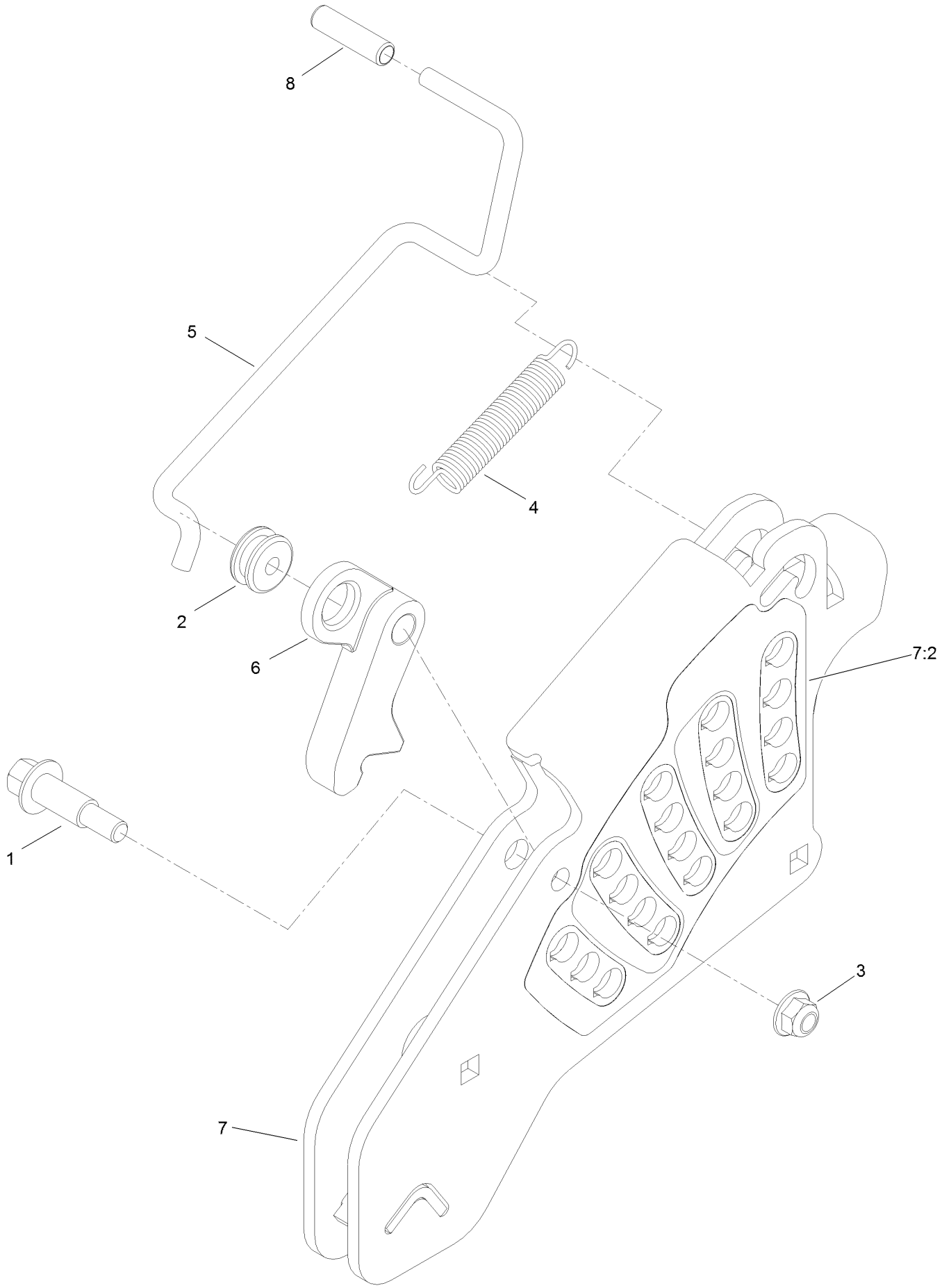

Height-of-Cut Assembly No. 109-7438 (continued)

Ref.	Part Number	Qty.	Description
1	62-1330	1	Bolt-Shoulder
2	109-7130	1	Grommet
3	104-8301	1	Nut-Flange, NI
4	109-7124	1	Spring-Extension
5	109-7128	1	Rod-Lock, Transport
6	116-0118	1	Pawl-Transport, HOC
7	109-7335	1	HOC Plate ASM
7:2	126-4398	1	Decal-HOC
8	109-8250	1	Grip-Lever

Engine, Clutch and Muffler Assembly

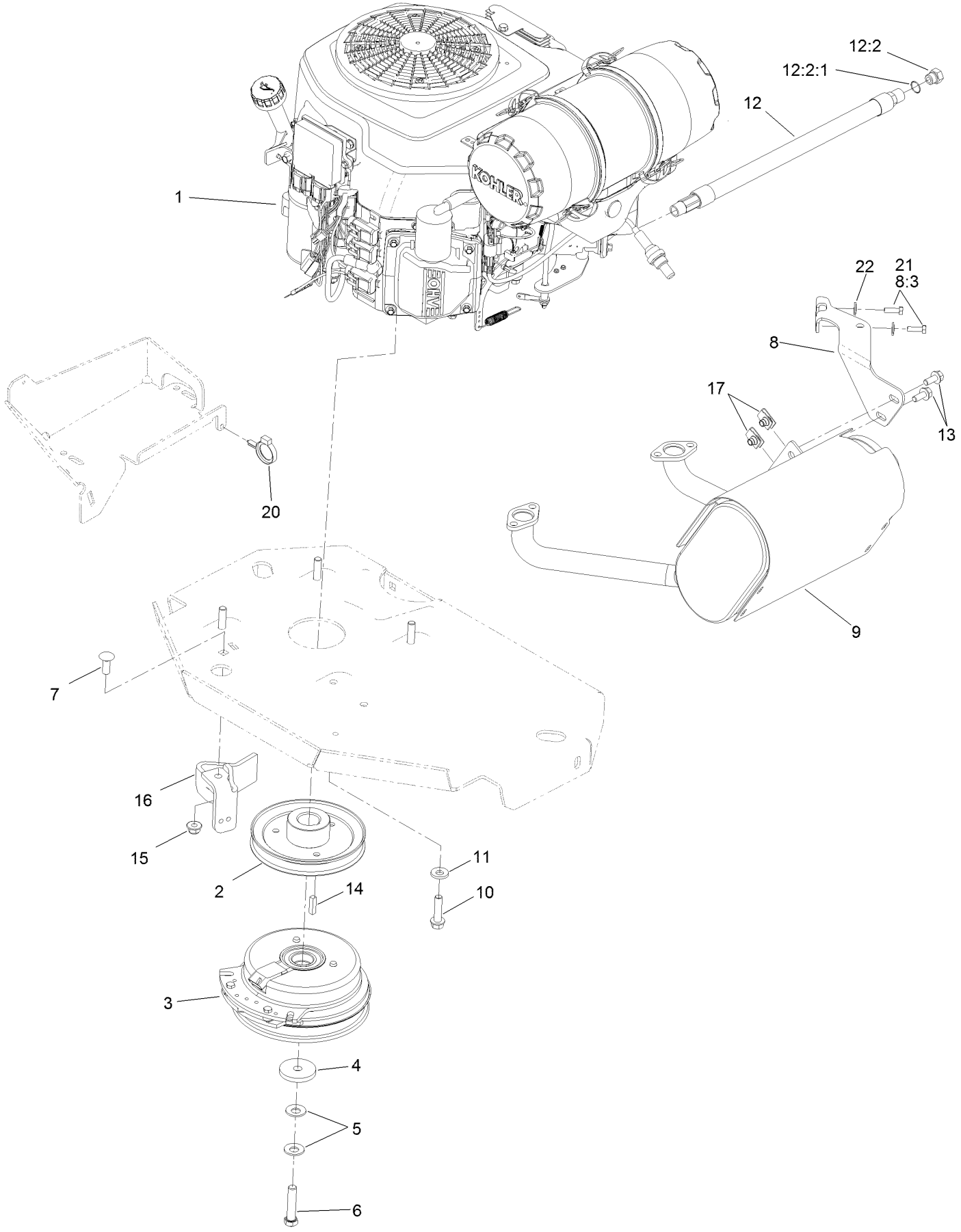

Engine, Clutch and Muffler Assembly (continued)

Ref.	Part Number	Qty.	Description
1		1	Engine-Kohler, Pcv740 Efi LP ■▲
2	109-9905	1	Sheave
3	116-1620	1	Clutch Kit
4	109-6919	1	Washer-Clutch
5	1-603610	2	Washer-Spring
6	109-9761	1	Screw-HH ◆
7	3231-22	1	Screw-CARR
8	116-3704	1	Bracket-Muffler
8	116-4297	1	Muffler Bracket Kit
8:3	116-4295	2	Screw-HH
9	126-8799	1	Muffler–Kit
10	32144-102	4	Screw-HWH
11	98-5975	4	Washer-Belleville
12	116-5316	1	Oil Drain Hose ASM
12:2	353-508	1	Plug-HH ●
12:2:1	237-42	1	O-Ring
13	3234-5	2	Screw-HHF
14	1-807259	1	Key
15	104-8301	1	Nut-Flange, NI
16	116-2612-01	1	Clutch-Anchor
17	94-2413	2	Nut-U
20	104-2490	1	Clamp-Hose
21	116-4295	2	Screw-HH
22	1-303435	2	Washer-Spring

● Torque to 24-26 ft-lb
▲ Obtain parts from www.kohlerplus.com
◆ Use Pro-Lock, Nut Type (P/N 1-840022, .5ml tube) on threads.
■ Not serviced separately

Deck Assembly

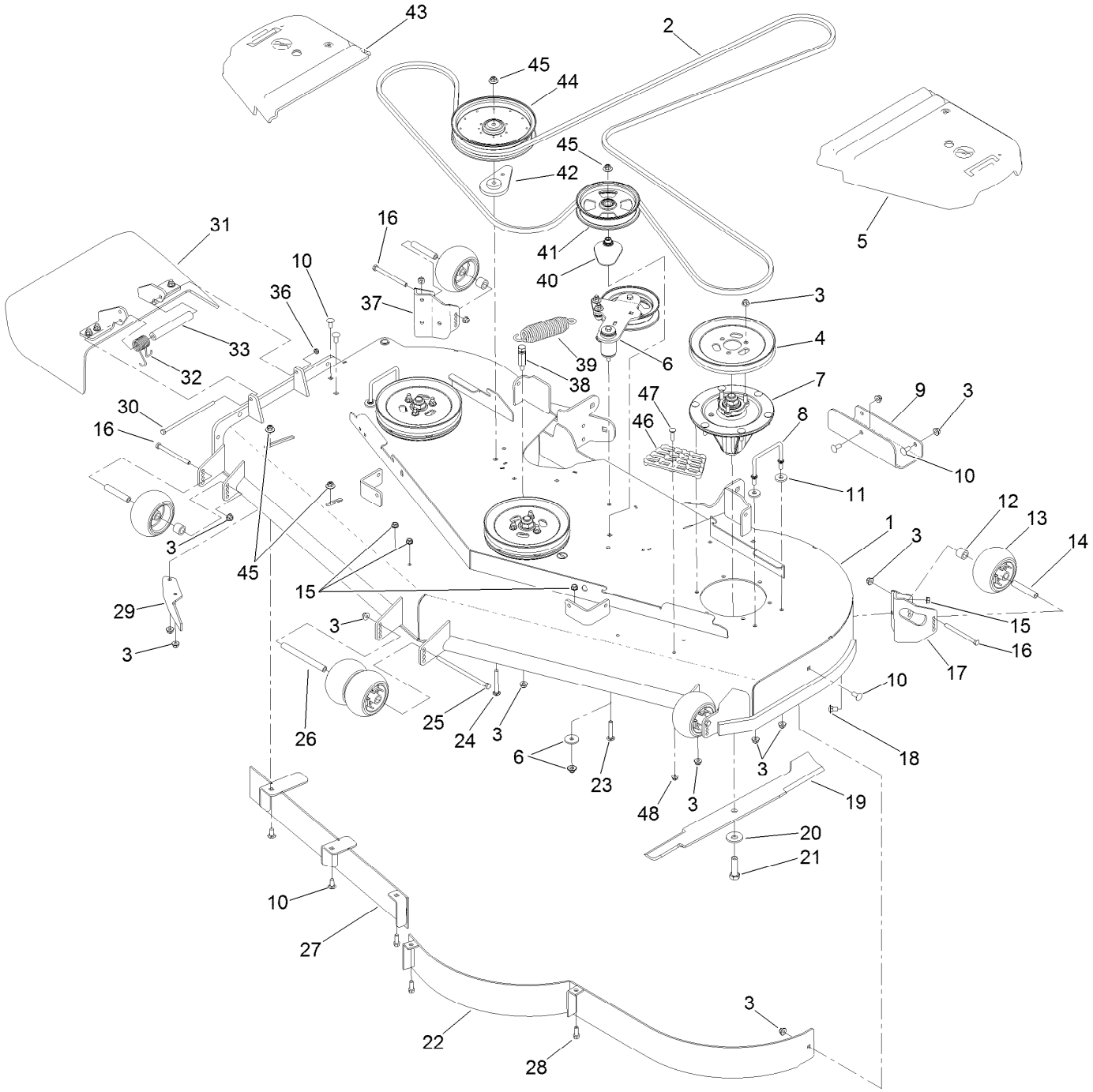

Deck Assembly (continued)

Ref.	Part Number	Qty.	Description
1	114-5820	1	Deck Decal ASM
2	114-5859	1	Belt-V
3	104-8301	44	Nut-Flange, NI
4	105-7733	3	Pulley
5	109-6938	1	Cover-Belt, LH
6		1	Idler Arm ASM ●
7	127-0560	3	Spindle ASM
8	109-6982	2	Wireform-Cover
9	121-7975-01	1	Plate-Skid
10	3231-27	9	Screw-CARR
11	1-373034	4	Washer
12	98-7913	4	Tube-Spacer
13	1-603299	6	Roller-Scalp, Anti
14	98-7912	4	Tube-Spanner
15	3290-357	9	Nut-HHF, Whiz
16	323-23	4	Screw-HH
17	106-7354-01	1	Mount-Wheel, LH
18	3231-1	6	Screw-CARR
19	105-7784-03	3	Blade-Hi Flow, 24.5 Inch
20	103-0865	3	Washer-Blade Bolt, Heavy
21	51-4060	3	Screw-Blade
22	114-5843-01	1	Baffle
23	3231-40	1	Bolt-CARR, Short Neck
24	3231-42	1	Screw-CARR
25	108-5388	1	Screw-HH
26	98-5967	1	Spacer-Wheel
27	115-7465-01	1	Baffle
28	92-1624	3	Screw-HWH
29	106-3216-01	1	Baffle-Discharge
30	322-50	1	Screw-HH
31	108-2792	1	Rubber Deflector ASM
32	108-4052	1	Spring-Torsion
33	105-4622	1	Spacer
36	3296-47	1	Nut-Lock, NI
37	106-7355-01	1	Mount-Wheel, RH
38	114-5867	1	Anchor-Spring, Tall
39	116-6317	1	Spring-Extension
40	109-2872	1	Spacer-Pulley
41	136-5404	1	Pulley-Idler, Flat
42	109-9416	1	Spacer-Idler
43	116-0094	1	Cover-Belt, RH
44	109-8590	1	Pulley-Idler
45	109-6658	4	Nut-Flange, NI
46	126-4781-03	1	Step-Deck
47	3230-3	1	Screw-CARR
48	104-8300	1	Nut-Flange, NI

● Not serviced separately

Deck Decal Assembly No. 114-5820

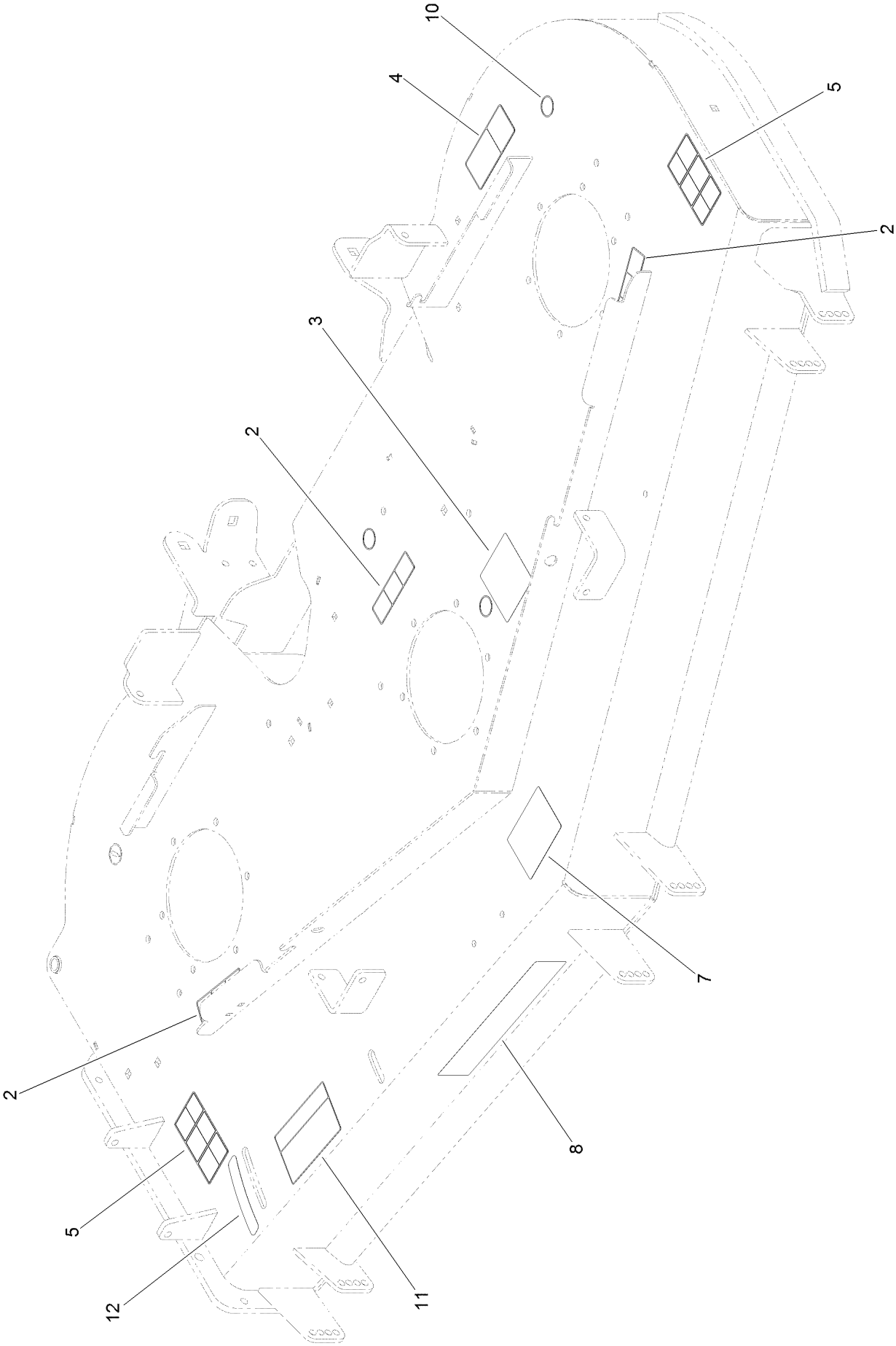

Deck Decal Assembly No. 114-5820 (continued)

Ref.	Part Number	Qty.	Description
2	112-9028	3	Decal-Missing, Cover
3	136-5508	1	Decal-Routing, Deck Belt
4	93-7818	1	Decal-Torque, Blade Bolt
5	117-3848	2	Decal-Danger
7	127-0326	1	Decal-Anti Scalp
8	107-1620	1	Decal
10	58-6520	4	Decal-Grease
11	110-2068	1	Decal-Adjustment, Baffle
12	110-2067	1	Decal-Setting, Baffle

Idler Arm Assembly

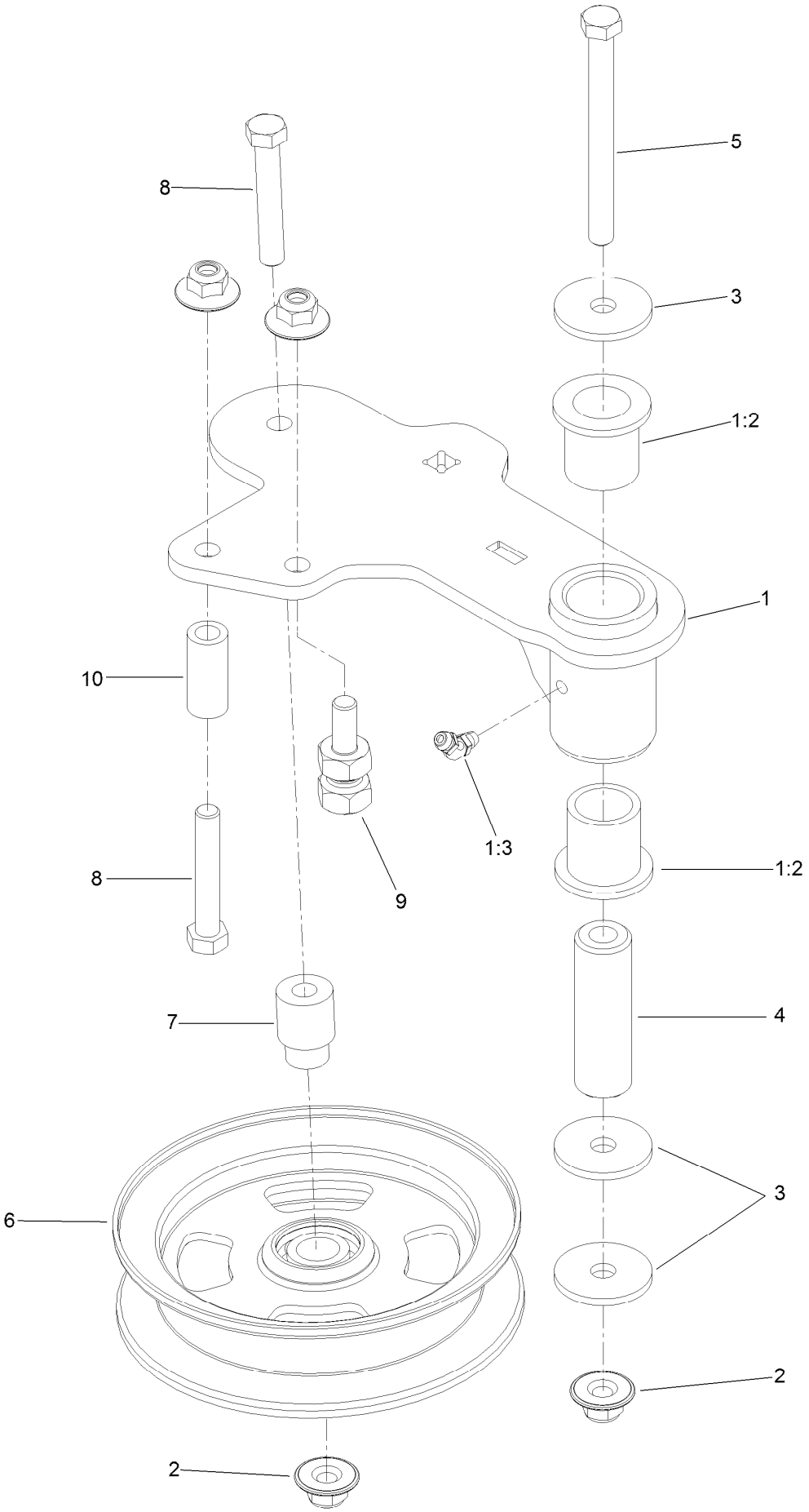

Idler Arm Assembly (continued)

Ref.	Part Number	Qty.	Description
1	114-5870	1	Idler Arm ASM
1:2	1-303514	2	Bearing-Flanged
1:3	1481	1	Fitting-Grease
2	109-6658	4	Nut-Flange, NI
3	1-213069	3	Washer
4	114-5848	1	Spacer-Plain
5	98-5961	1	Screw-HH
6	132-9425	1	Pulley-Idler, Flat
7	112-4212	1	Mount-Pulley
8	323-11	2	Screw-HH
9	132-4729	1	Anchor-Spring, Short
10	104-0151	1	Spacer

Spindle Assembly No. 127-0560

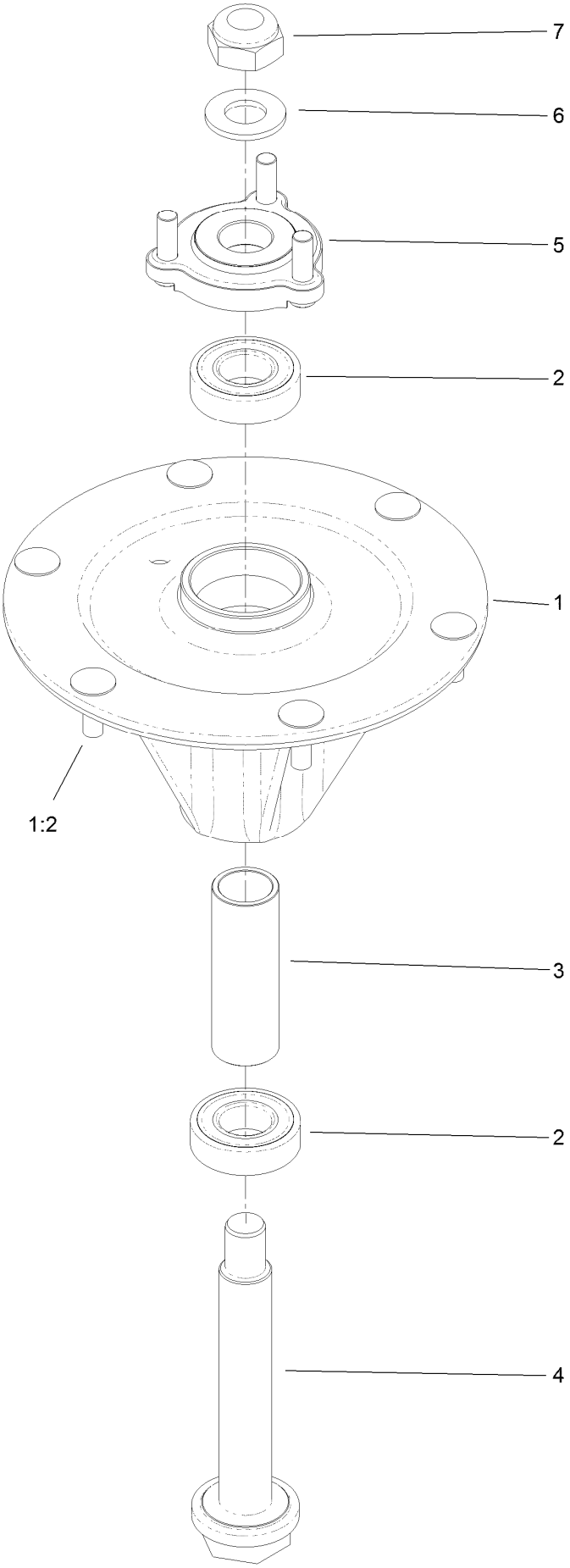

Spindle Assembly No. 127-0560 (continued)

Ref.	Part Number	Qty.	Description
1		1	Spindle Housing ASM W/Studs ●
1:2	114-8195	6	Bolt-Ribbed Neck
2	116-0720	2	Bearing-Ball
3	127-0554	1	Spacer-Bearing
4	127-0556	1	Shaft-Spindle, Ball Bearing
5	127-0557	1	Hub-Spindle (W/Studs)
6	92-5836	1	Washer
7	3296-67	1	Nut-Lock, NI

● Not serviced separately

Rubber Deflector Assembly No. 108-2792

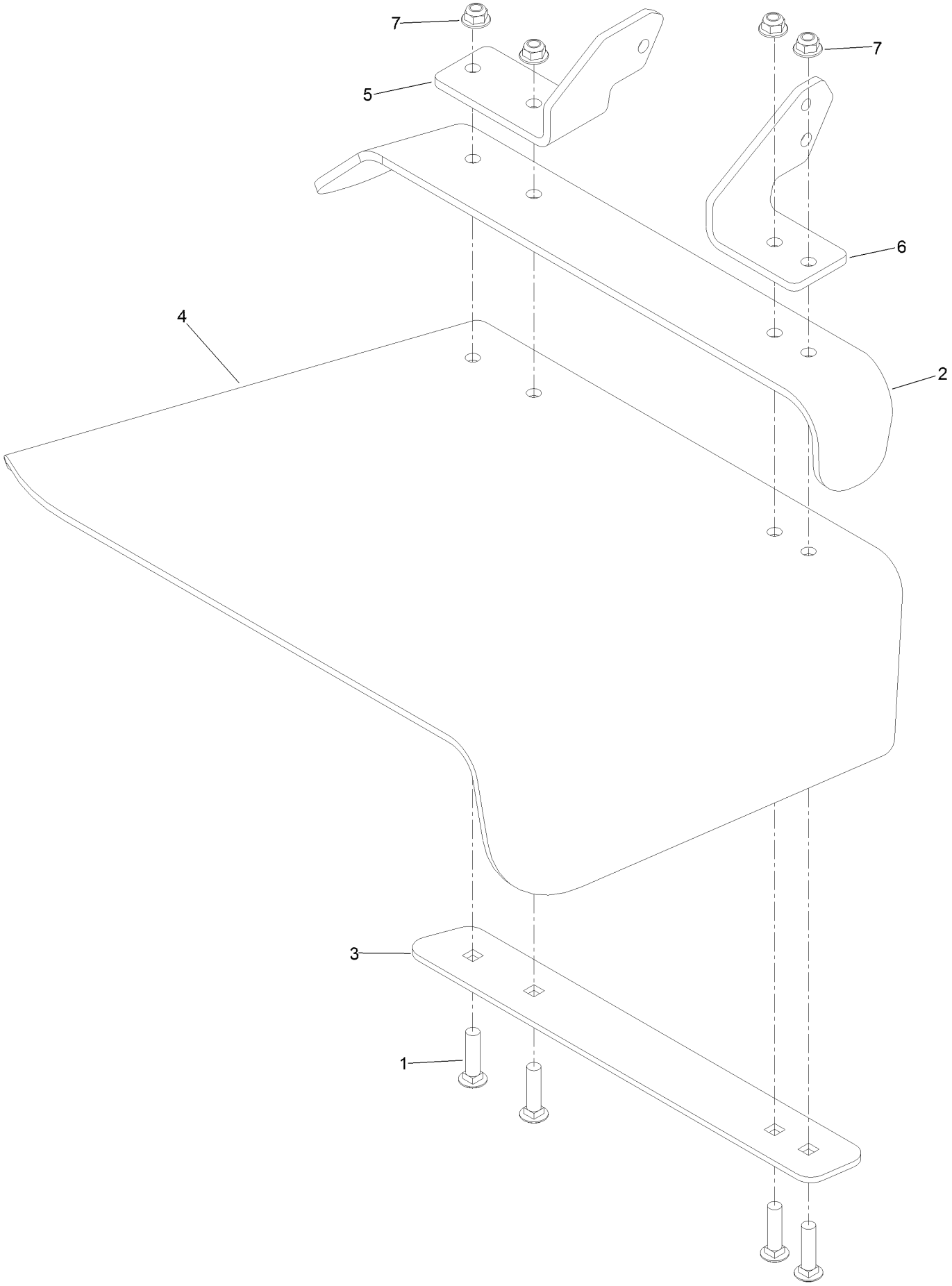

Rubber Deflector Assembly No. 108-2792 (continued)

Ref.	Part Number	Qty.	Description
1	3231-4	4	Screw-CARR
2	106-3246-01	1	Deflector
3	106-3248-03	1	Strap-Discharge
4	108-5029	1	Deflector-Rubber
5	108-4059-01	1	Plate-Hinge, Rear
6	106-3253-01	1	Plate-Hinge, Front
7	104-8301	4	Nut-Flange, NI

Attachments and Accessories

For 74934 Z Master Professional 5000 Series Riding Mower with 72in TURBO FORCE Side Discharge Mower

Product Name	Model/Part
Deluxe Seat Kit	121-7595
Recycler Kit	115-7469
Operator Controlled Discharge Chute Kit	117-3600
Bimini Folding Shade Assembly	115-4510
Z Stand Kit	117-0354
Seat Cover W/arm rest	117-0095
Power Deck Lift Kit	132-5986
Turbo Baffle Kit	107-1634
Light Kit	116-1154
Hitch Kit	109-9487
Trash Holder Kit	TC26
Hypr-Oil 500 (quart)	114-4713
Hypr-Oil 500 (gallon)	114-4714
Hypr-Oil 500-5 (5 gallon)	114-4715
Blade-Hi Flow, 24.5in	105-7784-03
Blade-Mid Flow, 24.5in	105-7711-03
Blade-Lo Flow, 24.5in	105-7712-03
Blade-Atomic, 24.5in	105-7719-03
Blade-Recyler, 24.5in	105-7778-03
6 Pack Blade, 24.5in Hi-Flow	108-1120
6 Pack-Blade, 24.5in Mid-Flow	110-0404
6 Pack-Blade, 24.5in Lo-Flow	110-0410
6 Pack Blade, 24.5in Atomic	108-1126
6 Pack-Blade, 24.5in Recycler	110-0411
Roller Striper Kit	115-7480
Filter Minder Gauge	99-4664
Toro Deluxe Rider Cover	490-7319
Spark Arrestor Screen	75-6880
Anti-Scalp Kit (Trim Side)	108-4140
Seat Tilt Frame And Iso Mount Kit	121-7596
Jack Mount Kit	127-6665
Jack Kit	127-6666

Notes:

Notes:

Notes:

TORO®

Count on it.