Form No. 3409-970 Rev A

TORO®

Count on it.

Parts Catalog

# Groundsmaster® 3280-D

## Traction Unit

**Model No. 30344—Serial No. 400000000 and Up**

Register at www.Toro.com.
Original Instructions (EN)

CE

*3409-970* A

# Ordering Replacement Parts

To order replacement parts, please supply the part number, the quantity, and the description of each part desired.

### Understanding Reference Numbers

Each identified part in an illustration has a reference number. The reference number for a part also appears in the parts list, along with other information about the part.

This catalog uses two special reference number formats, one to indicate parts in a service assembly and another to indicate the quantity of a given part in an illustration.

### Service Assembly Reference Numbers

Parts in service assemblies have reference numbers in the form a:b. The a represents the reference number of the entire service assembly and the b represents a sequential number unique to each part within the service assembly.

For example, a wheel assembly might be identified by reference number 6, the tire by 6:1, the valve by 6:2, and the wheel by 6:3. When you order the assembly identified by reference number 6, you receive all parts identified by reference numbers 6:1,6:2, and 6:3. However, you may also order any part individually. Reference numbers of this type appear in illustration and in parts lists.

### Reference Numbers Indicating Quantity

In an illustration, if a reference number indicates more than one part, the reference number has the form nX y. The n represents the quantity of the part, the X is the multiplication symbol, and the y represents the reference number.

For example, in an illustration, the reference number 2X 37 means that two of the parts identified by reference number 37 are indicated.

# Contents

Frame and Roll-Over Protection System Assembly . . . 5
Frame Assembly No. 132-7210 . . . 6
Front Axle and Wheel Assembly . . . 7
Front Axle Assembly No. 131-6061-03 . . . 8
Rear Steering Assembly . . . 11
Rear Axle Assembly . . . 13
Steering Cylinder Assembly No. 115-4525 . . . 14
Engine, Clutch, Air Cleaner and Drive Shaft Assembly . . . 15
Air Cleaner Assembly No. 104-3427 . . . 17
Driveshaft Assembly No. 131-6087 . . . 18
Engine Mounting and Clutch Assembly . . . 19
Radiator and Cooler Assembly . . . 20
Fuel Tank and Control Panel Assembly . . . 22
Fuel Lines and Filter Assembly . . . 24
Throttle Control Assembly . . . 25
PTO Drive Assembly . . . 26
PTO Driveshaft Assembly No. 108-1366 . . . 27
Traction Pedal Assembly . . . 28
Transmission Linkage Assembly . . . 29
Brake Pedal and Linkage Assembly . . . 30
Hood Assembly . . . 31
Steering Assembly . . . 32
Steer Valve Assembly No. 131-5624 . . . 33
Hydraulic Assembly . . . 34
Valve Assembly No. 132-7243 . . . 35
Transmission Hydraulic Assembly . . . 36
Hydraulic Pump Assembly No. 133-6385 . . . 38
Hydraulic Motor Assembly No. 130-8724 . . . 40
Battery Assembly . . . 41
Crankcase Assembly . . . 42
Oil Pan and Dipstick Assembly . . . 43
Cylinder Head Assembly . . . 44
Gear Case and Oil Filter Cartridge Assembly . . . 45
Cylinder Head Cover Assembly . . . 46
Main Bearing Case Assembly . . . 47
Camshaft and Idle Gear Shaft Assembly . . . 48
Piston and Crankshaft Assembly . . . 49
Fuel Camshaft and Governor Shaft Assembly . . . 50
Idle Apparatus Assembly . . . 51
Stop Solenoid and Fuel Pump Cover Assembly . . . 52
Injection Pump Assembly . . . 53
Governor Assembly . . . 54
Speed Control Plate Assembly . . . 55
Nozzle Holder and Glow Plug Assembly . . . 56
Nozzle Holder Assembly . . . 57
Alternator and Pulley Assembly . . . 58
Alternator Components Assembly . . . 59
Starter and Flywheel Assembly . . . 60
Starter Component Assembly . . . 61
Water Flange and Thermostat Assembly . . . 62
Water Pump Assembly . . . 63
Valve and Rocker Arm Assembly . . . 64
Inlet and Exhaust Manifold Assembly . . . 65
Miscellaneous Engine Parts . . . 66

**© 2017—The Toro® Company**
**8111 Lyndale Avenue South**
**Bloomington, MN 55420**



**Contact us at www.Toro.com.**
**Printed in the USA.**
**All Rights Reserved**

# Contents (continued)

Upper Gasket Kit . . . . . 67
Lower Engine Gasket Kit. . . . . 68
Attachments and Accessories . . . . . 69

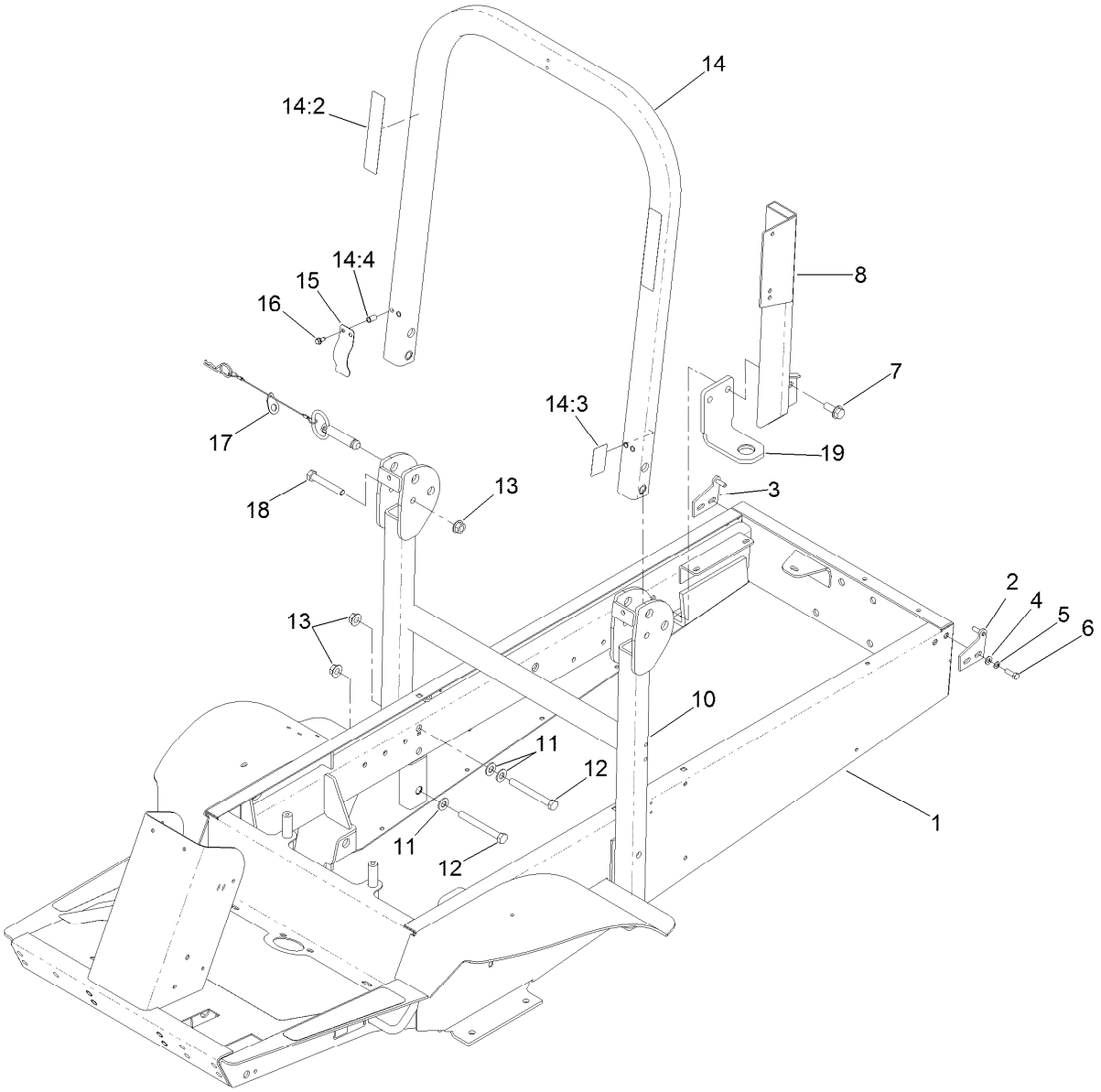


# Frame and Roll-Over Protection System Assembly

| Ref. | Part Number | Qty. | Description |
|---|---|---|---|
| 1 | 132-7210 | 1 | Frame Assembly |
| 2 | 105-0004-01 | 1 | LH Hinge Pin ASM |
| 3 | 105-0003-01 | 1 | RH Hinge Pin ASM |
| 4 | 3256-23 | 4 | Washer-Flat |
| 5 | 3253-4 | 4 | Washer-Lock |
| 6 | 322-5 | 4 | Screw-HH |
| 7 | 3234-38 | 8 | Screw-HHF |
| 8 | 105-2513-03 | 1 | Mount-Air Cleaner |
| 10 | 110-5693-03 | 1 | ROPS-Lower |
| 11 | 3256-26 | 6 | Washer-Flat |
| 12 | 325-18 | 4 | Screw-HH |

| Ref. | Part Number | Qty. | Description |
|---|---|---|---|
| 13 | 32128-23 | 6 | Nut-HF |
| 14 | 110-5690 | 1 | Upper ROPS ASM |
| 14:2 | 108-2073 | 2 | Decal-Warning |
| 14:3 | 108-2074 | 1 | Decal-ROPS |
| 14:4 | 32148-11 | 4 | Insert-Threaded |
| 15 | 110-5696 | 2 | Spring-Leaf |
| 16 | 32144-10 | 4 | Screw-HWH |
| 17 | 103-4553 | 2 | Pin-Fold, ROPS |
| 18 | 325-13 | 2 | Screw-HH |
| 19 | 114-2867-03 | 4 | Bracket-Mount, Engine |

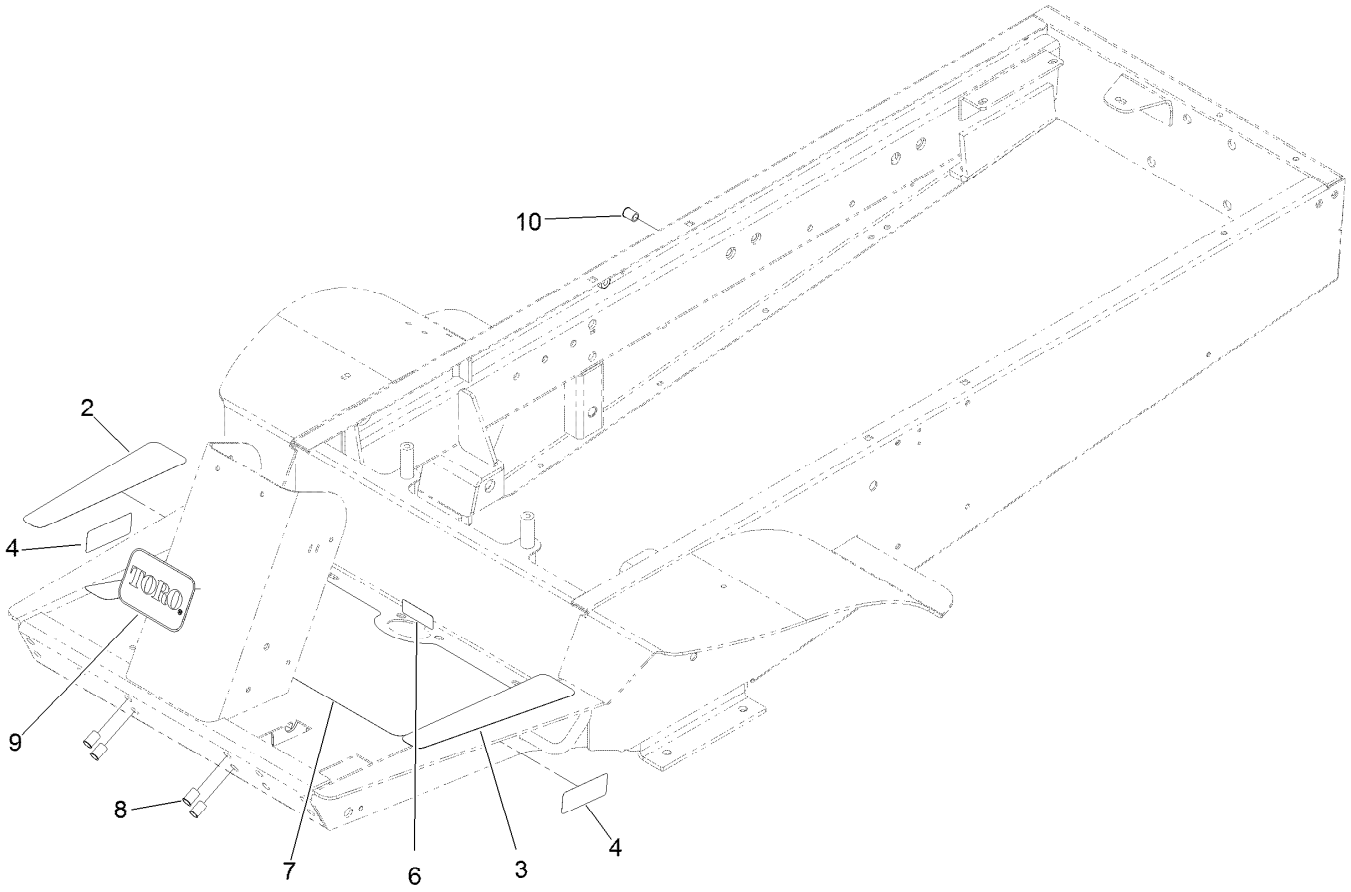


# Frame Assembly No. 132-7210

| *Ref.* | *Part Number* | *Qty.* | *Description* |
|---|---|---|---|
| 2 | 93-7834 | 1 | Decal-Footrest, RH |
| 3 | 66-3200 | 1 | Tread-Footrest, LH |
| 4 | 106-9206 | 2 | Decal-Torque, Wheel |
| 6 | 93-6686 | 1 | Decal-Oil, HYD |
| 7 | 105-7160 | 1 | Pad-Floor |
| 8 | 32148-10 | 4 | Insert-Nut |
| 9 | 67-1300 | 1 | Decal |
| 10 | 32148-9 | 1 | Insert-Nut |

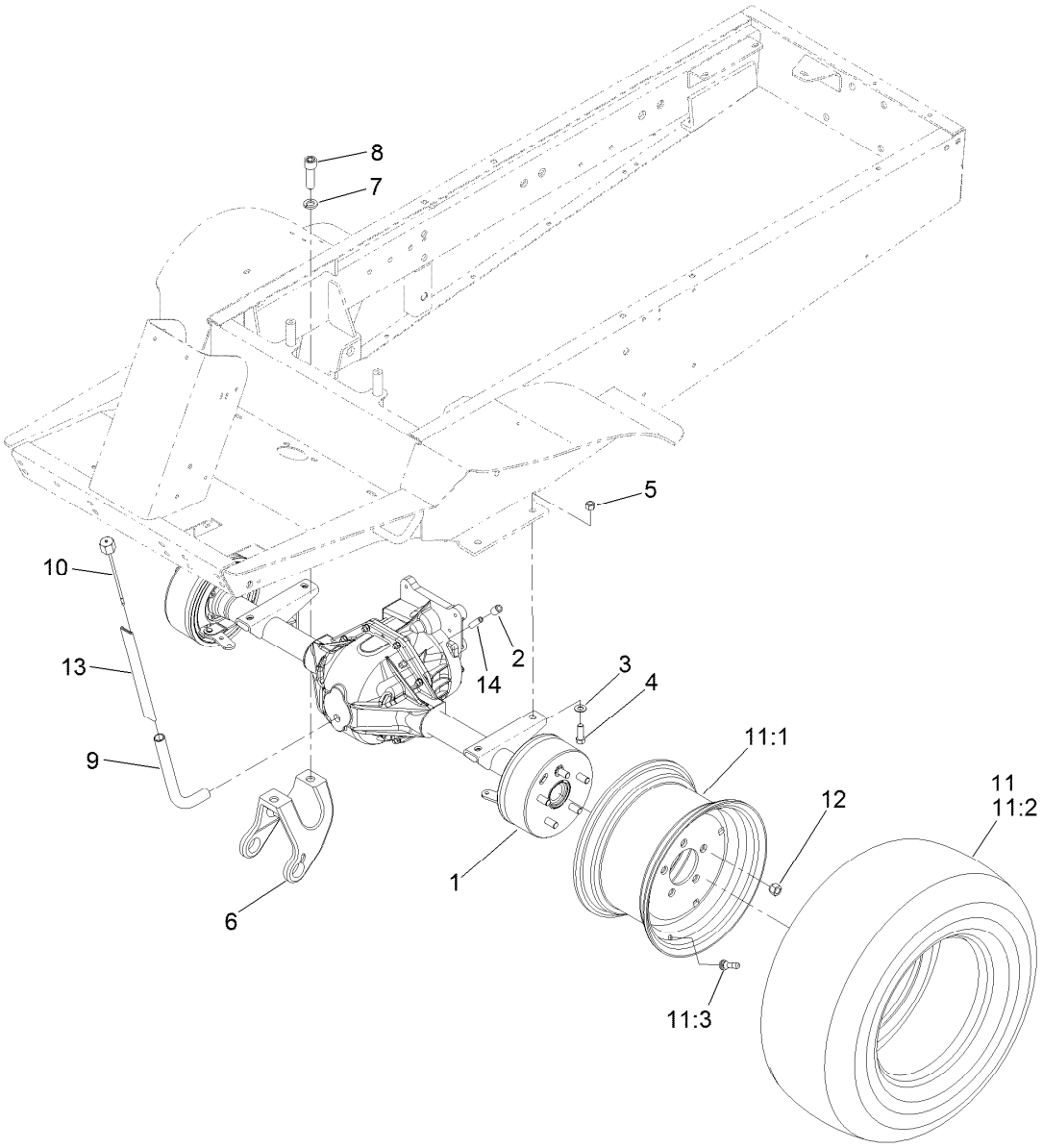


# Front Axle and Wheel Assembly

| Ref. | Part Number | Qty. | Description |
|---|---|---|---|
| 1 | 131-6061-03 | 1 | Axle ASM |
| 2 | 2810-1 | 1 | Coupling-Pipe |
| 3 | 3256-25 | 4 | Washer-Flat |
| 4 | 324-5 | 4 | Screw-HH |
| 5 | 3296-48 | 4 | Nut-Lock, NI |
| 6 | 110-9678 | 2 | Bracket-Carrier |
| 7 | 3253-8 | 4 | Washer-Lock |
| 8 | 3273-38 | 4 | Screw-HSH |
| 9 | 105-7169 | 1 | Tube-Fill, Oil |

| Ref. | Part Number | Qty. | Description |
|---|---|---|---|
| 10 | 105-7172 | 1 | Dipstick ASM |
| 11 | 117-0821 | 2 | Wheel And Tire ASM |
| 11:1 | 117-0822 | 1 | Wheel |
| 11:2 | 117-0823 | 1 | Tire-Standard |
| 11:3 | 232-27 | 1 | Stem-Valve |
| 12 | 242-50 | 10 | Nut-Lug |
| 13 | 110-5651 | 1 | Sleeve-Protective |
| 14 | 289-6 | 1 | Nipple-Pipe |

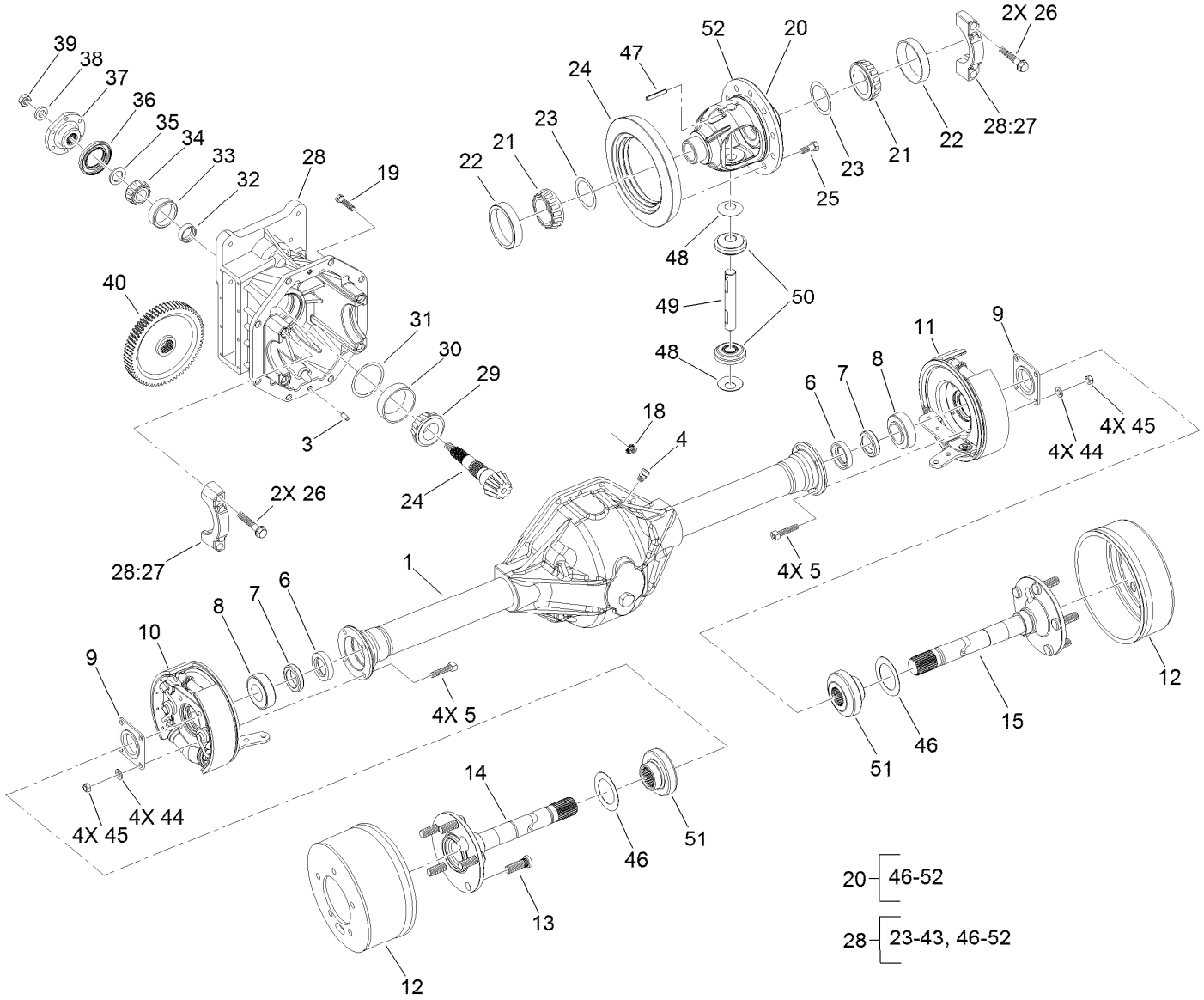


# Front Axle Assembly No. 131-6061-03

| Ref. | Part Number | Qty. | Description |
|---|---|---|---|
| 1 | 110-9670 | 1 | Lower Housing ASM |
| 3 | 21-8270 | 2 | Pin-Dowel |
| 4 | 72-9420 | 1 | Vent |
| 5 | 94-6934 | 8 | Screw-HH |
| 6 | 24-8840 | 2 | Ring-Retaining, Wheel Bearing |
| 7 | 99-6969 | 2 | Seal-Oil, Wheel End |
| 8 | 21-8180 | 2 | Bearing ASM |
| 9 | 28-0670 | 2 | Seal-Grease |
| 10 | 132-7284 | 1 | RH Brake ASM |
| 11 | 132-7285 | 1 | LH Brake ASM |
| 12 | 110-3072 | 2 | Drum-Brake |
| 13 | 106-9205 | 10 | Stud-Wheel |
| 14 | 110-3073 | 1 | Shaft-Axle, RH |
| 15 | 110-3074 | 1 | Shaft-Axle, LH |
| 18 | 121-4698 | 8 | Nut-Keps |
| 19 | 3210-8 | 8 | Screw-HH |
| 20 | 110-4136 | 1 | Differential Case ASM |

| Ref. | Part Number | Qty. | Description |
|---|---|---|---|
| 21 | 254-65 | 2 | Bearing-Roller, Cone |
| 22 | 254-66 | 2 | Cup-Bearing, Roller |
| 23 | 21-8090 | 2 | Shim-Bearing, Differential (.003) |
| 23 | 21-8100 | 2 | Shim-Bearing, Differential (.005) |
| 23 | 21-8110 | 2 | Shim-Bearing, Differential (.010) |
| 23 | 21-8120 | 2 | Shim-Bearing, Differential (.030) |
| 24 | 92-1676 | 1 | Gear And Pinion ASM |
| 25 | 21-7770 | 5 | Screw-Gear, Drive |
| 26 | 92-1773 | 4 | Screw-HHF |
| 28 | 132-7286 | 1 | Carrier Sub ASM |
| 28:27 | | 2 | Cap-Bearing ● |
| 29 | 43-6760 | 1 | Bearing-Roller, Cone Taper |
| 30 | 43-6750 | 1 | Bearing-Taper, Cup |
| 31 | 43-6710 | 1 | Shim-Pinion (.003) |

● Not serviced separately

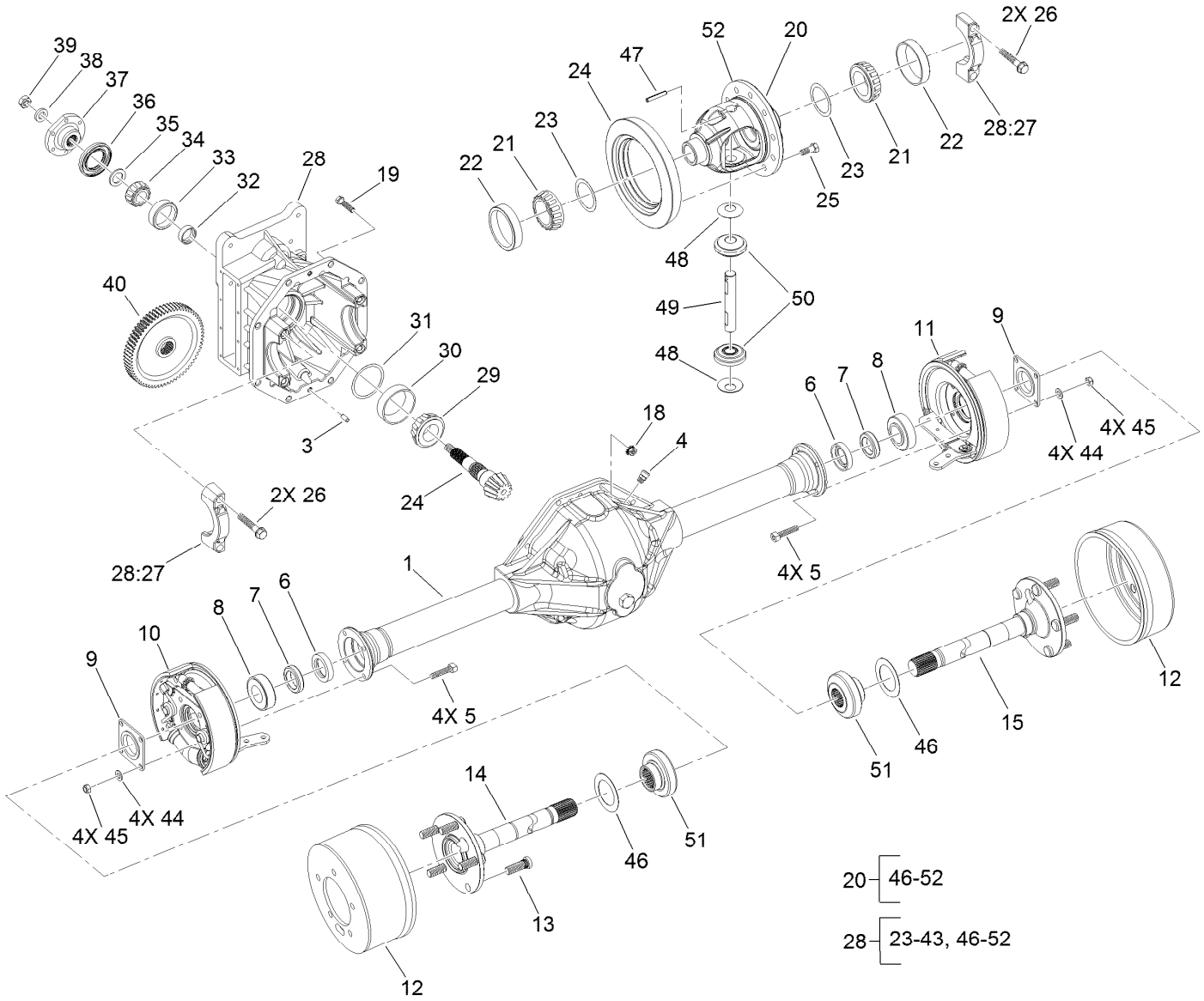


# Front Axle Assembly No. 131-6061-03 (continued)

| Ref. | Part Number | Qty. | Description |
|---|---|---|---|
| 31 | 43-6711 | 1 | Shim-Pinion (.005) |
| 31 | 43-6712 | 1 | Shim-Pinion (.010) |
| 31 | 43-6713 | 1 | Shim-Pinion (.030) |
| 32 | 21-8020 | 1 | Spacer-Bearing |
| 33 | 254-90 | 1 | Bearing-Cup |
| 34 | 254-91 | 1 | Cone-Bearing |
| 35 | 72-3570 | 1 | Shim-Bearing, Front (.094) |
| 35 | 72-3571 | 1 | Shim-Bearing, Front (.096) |
| 35 | 72-3572 | 1 | Shim-Bearing, Front (.098) |
| 35 | 72-3573 | 1 | Shim-Bearing, Front (.100) |
| 35 | 72-3574 | 1 | Shim-Bearing, Front (.102) |
| 35 | 72-3575 | 1 | Shim-Bearing, Front (.104) |
| 35 | 72-3576 | 1 | Shim-Bearing, Front (.106) |
| 35 | 72-3577 | 1 | Shim-Bearing, Front (.108) |
| 35 | 72-3578 | 1 | Shim-Bearing, Front (.110) |
| 35 | 72-3580 | 1 | Shim-Bearing, Front (.112) |
| 35 | 72-3581 | 1 | Shim-Bearing, Front (.114) |
| 35 | 72-3582 | 1 | Shim-Bearing, Front (.116) |

| Ref. | Part Number | Qty. | Description |
|---|---|---|---|
| 35 | 72-3583 | 1 | Shim-Bearing, Front (.118) |
| 35 | 72-3584 | 1 | Shim-Bearing, Front (.120) |
| 35 | 72-3585 | 1 | Shim-Bearing, Front (.125) |
| 35 | 72-3586 | 1 | Shim-Bearing, Front (.127) |
| 35 | 72-3587 | 1 | Shim-Bearing, Front (.129) |
| 35 | 72-3588 | 1 | Shim-Bearing, Front (.131) |
| 35 | 72-3590 | 1 | Shim-Bearing, Front (.133) |
| 35 | 72-3591 | 1 | Shim-Bearing, Front (.135) |
| 35 | 72-3592 | 1 | Shim-Bearing, Front (.137) |
| 35 | 72-3593 | 1 | Shim-Bearing, Front (.139) |
| 35 | 72-3594 | 1 | Shim-Bearing, Front (.141) |
| 35 | 72-3595 | 1 | Shim-Bearing, Front (.143) |
| 35 | 72-3596 | 1 | Shim-Bearing, Front (.145) |
| 35 | 72-3597 | 1 | Shim-Bearing, Front (.147) |
| 35 | 72-3598 | 1 | Shim-Bearing, Front (.149) |
| 35 | 72-3600 | 1 | Shim-Bearing, Front (.151) |
| 36 | 71-4330 | 1 | Seal |
| 37 | 68-7010 | 1 | Flange |

● Not serviced separately

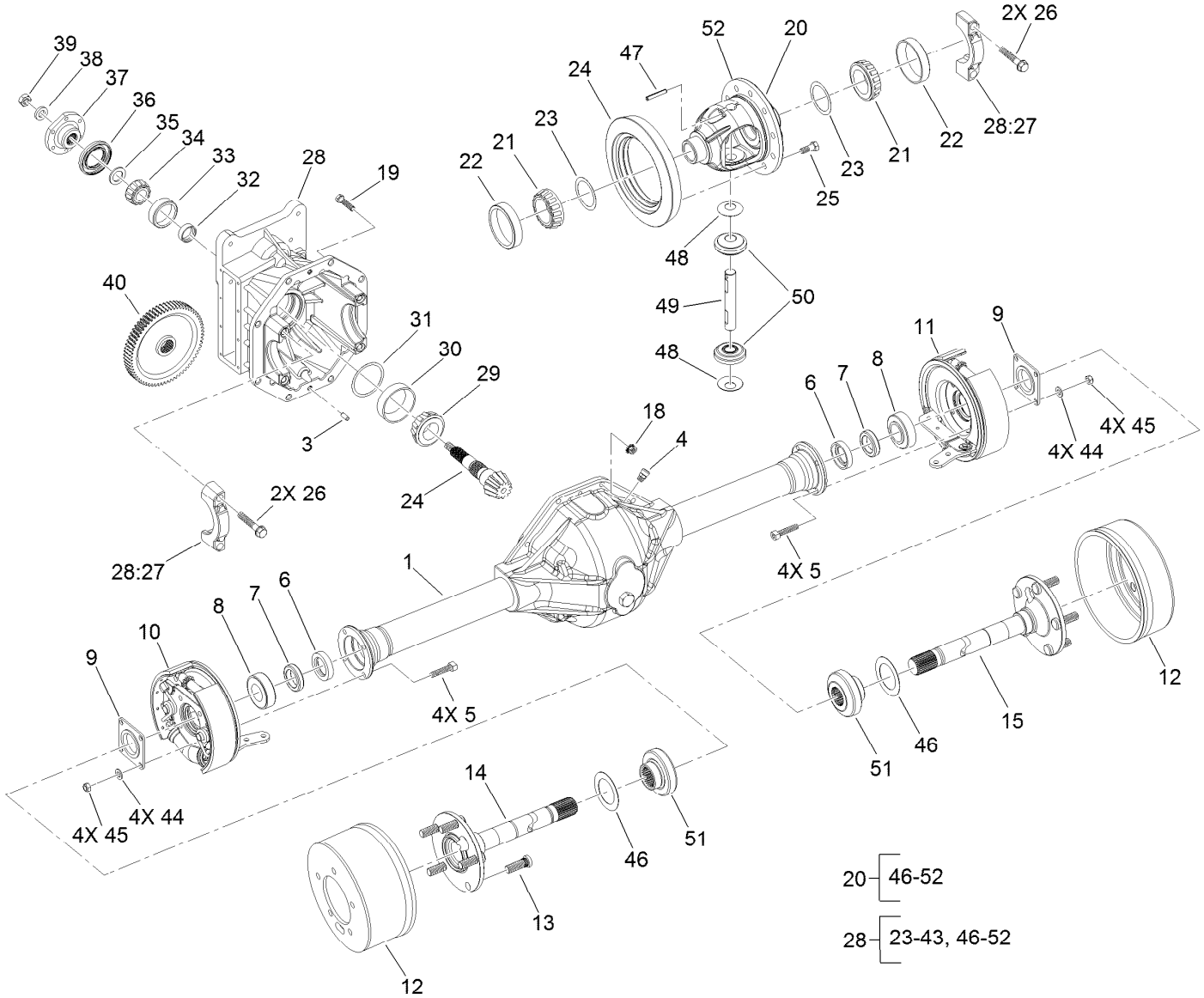


# Front Axle Assembly No. 131-6061-03 (continued)

| Ref. | Part Number | Qty. | Description |
|---|---|---|---|
| 38 | 71-4340 | 1 | Washer |
| 39 | 71-4350 | 1 | Nut |
| 40 | 86-7230 | 1 | Gear-Input, Transmission |
| 44 | 94-6936 | 8 | Washer-Hardened |
| 45 | 94-6935 | 8 | Locknut |
| 46 | 110-3077 | 2 | Washer-Thrust |

| Ref. | Part Number | Qty. | Description |
|---|---|---|---|
| 47 | 42150 | 1 | Pin-Lock, Pinion |
| 48 | 21-7730 | 2 | Washer-Thrust, Pinion |
| 49 | 21-7700 | 1 | Shaft-Mate, Pinion |
| 50 | 110-3079 | 2 | Pinion-Differential |
| 51 | 110-3078 | 2 | Gear-Differential |
| 52 | 21-7670 | 1 | Case-Differential |

● Not serviced separately

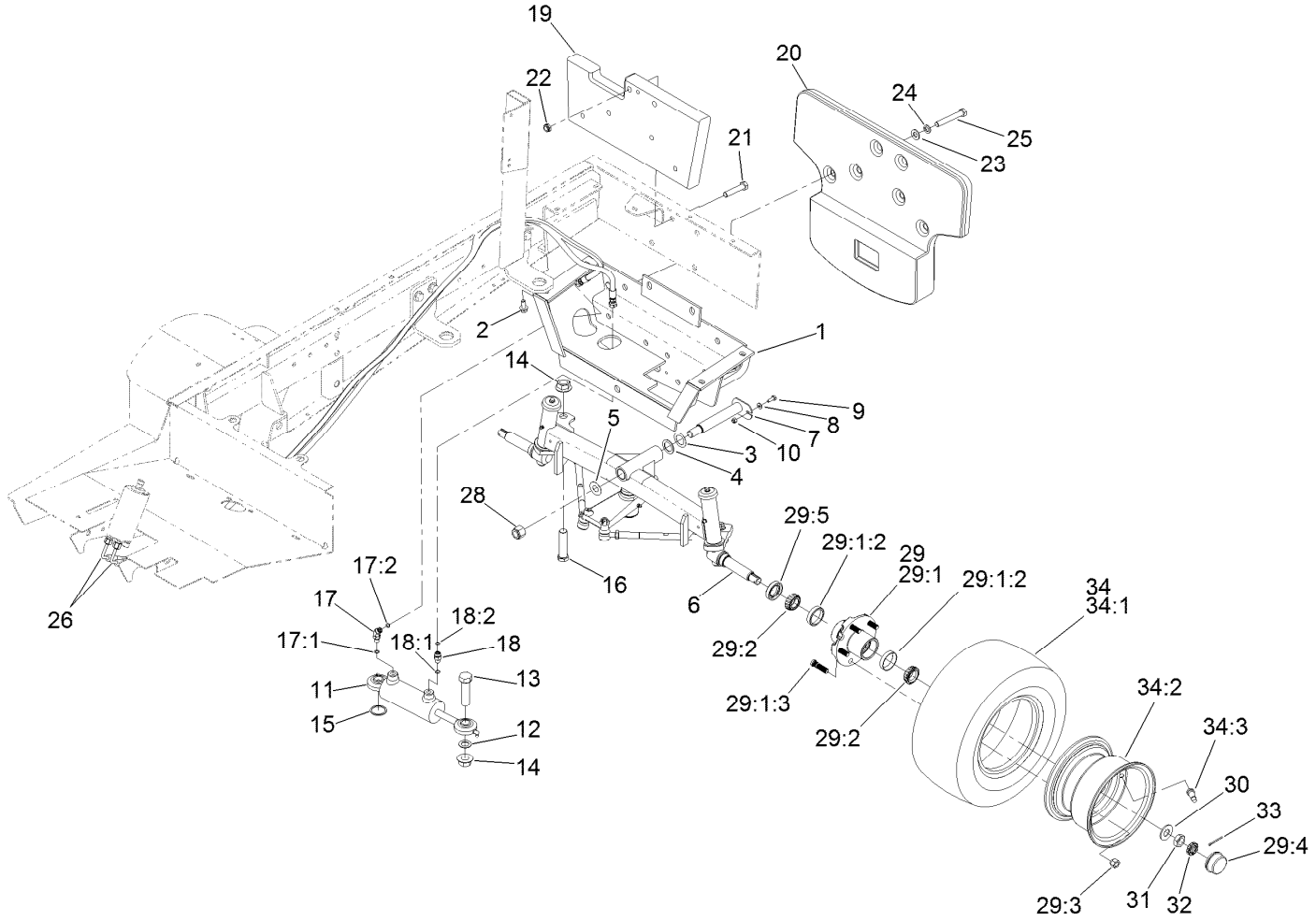


# Rear Steering Assembly

| Ref. | Part Number | Qty. | Description |
|---|---|---|---|
| 1 | 63-6430-03 | 1 | Frame-Rear |
| 2 | 3234-25 | 4 | Screw-HHF |
| 3 | 56-2460 | 1 | Washer-Flat |
| 4 | 10-8110 | 1 | Washer-Thrust |
| 5 | 71-4540 | 1 | Washer-Thrust |
| 6 | | 1 | Rear Axle ASM ● |
| 7 | 63-6770-03 | 1 | Pin-Masked |
| 8 | 3256-22 | 1 | Washer-Flat |
| 9 | 321-4 | 1 | Screw-HH |
| 10 | 3296-42 | 1 | Nut-Lock, NI |
| 11 | 115-4525 | 1 | Cylinder ASM |
| 12 | 67-9410 | 1 | Washer |
| 13 | 328-25 | 1 | Screw-HH |
| 14 | 32128-45 | 2 | Nut-HHF |
| 15 | 67-7250 | 1 | Spacer-Ring |
| 16 | 67-7300 | 1 | Screw-HH |
| 17 | 340-103 | 1 | Fitting-HYD, 45 DEG |
| 17:1 | 237-78 | 1 | O-Ring |
| 17:2 | 237-21 | 1 | O-Ring |
| 18 | 340-92 | 1 | Fitting-Str |
| 18:1 | 237-78 | 1 | O-Ring |
| 18:2 | 237-21 | 1 | O-Ring |
| 19 | 110-1995-03 | 1 | Weight-Rear, Inside |
| 20 | 110-9666-01 | 1 | Weight-Rear |
| 21 | 325-10 | 2 | Screw-HH |
| 22 | 3296-45 | 2 | Nut-Lock, NI |
| 23 | 3256-26 | 4 | Washer-Flat |
| 24 | 3253-7 | 4 | Washer-Lock |
| 25 | 325-14 | 4 | Screw-HH |
| 26 | 108-2086 | 2 | Hose ASM |
| 28 | 3296-51 | 1 | Nut-Lock, NI |
| 29 | 117-8962 | 2 | Hub ASM |
| 29:1 | | 1 | Hub ASM ● |
| 29:1:2 | 254-72 | 2 | Bearing-Cup, Tapered |
| 29:1:3 | 114-3918 | 5 | Stud-Wheel |
| 29:2 | 254-94 | 2 | Bearing-Cone, Tapered |

● Not serviced separately

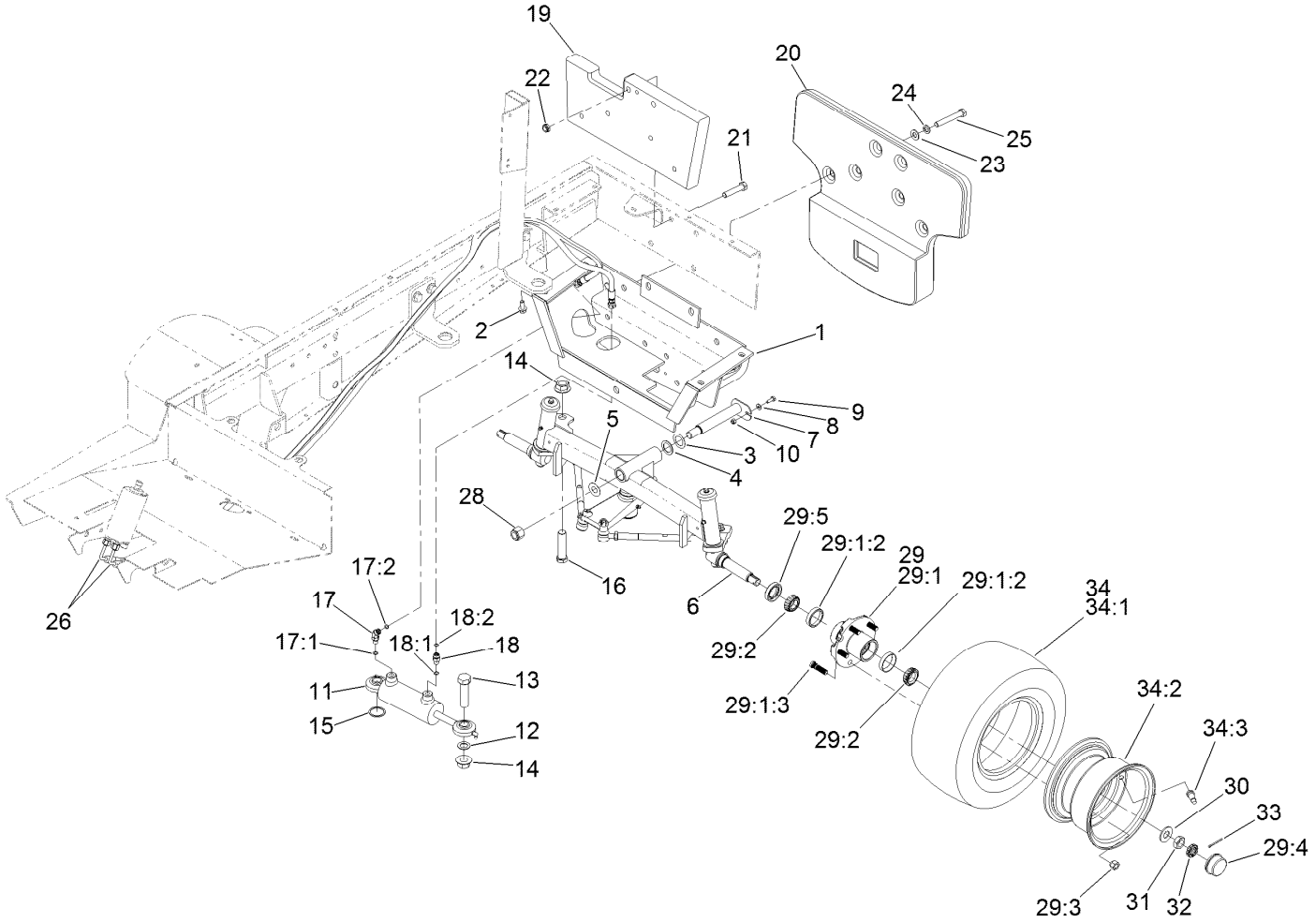


# Rear Steering Assembly (continued)

| Ref. | Part Number | Qty. | Description |
|---|---|---|---|
| 29:3 | 242-50 | 5 | Nut-Lug |
| 29:4 | 241-119 | 1 | Cap-Dust |
| 29:5 | 112-1690 | 1 | Seal-Oil |
| 30 | 93-0309 | 2 | Washer-Tab |
| 31 | 3220-7 | 2 | Nut-Jam |
| 32 | 93-0307 | 2 | Nut-Lock, Retainer |

| Ref. | Part Number | Qty. | Description |
|---|---|---|---|
| 33 | 3272-13 | 2 | Pin-Cotter |
| 34 | | 2 | Wheel And Tire ASM ● |
| 34:1 | 231-105 | 1 | Tire-Ribbed |
| 34:2 | 107-9059 | 1 | Wheel |
| 34:3 | 232-35 | 1 | Valve Stem And Cap ASM |

● Not serviced separately

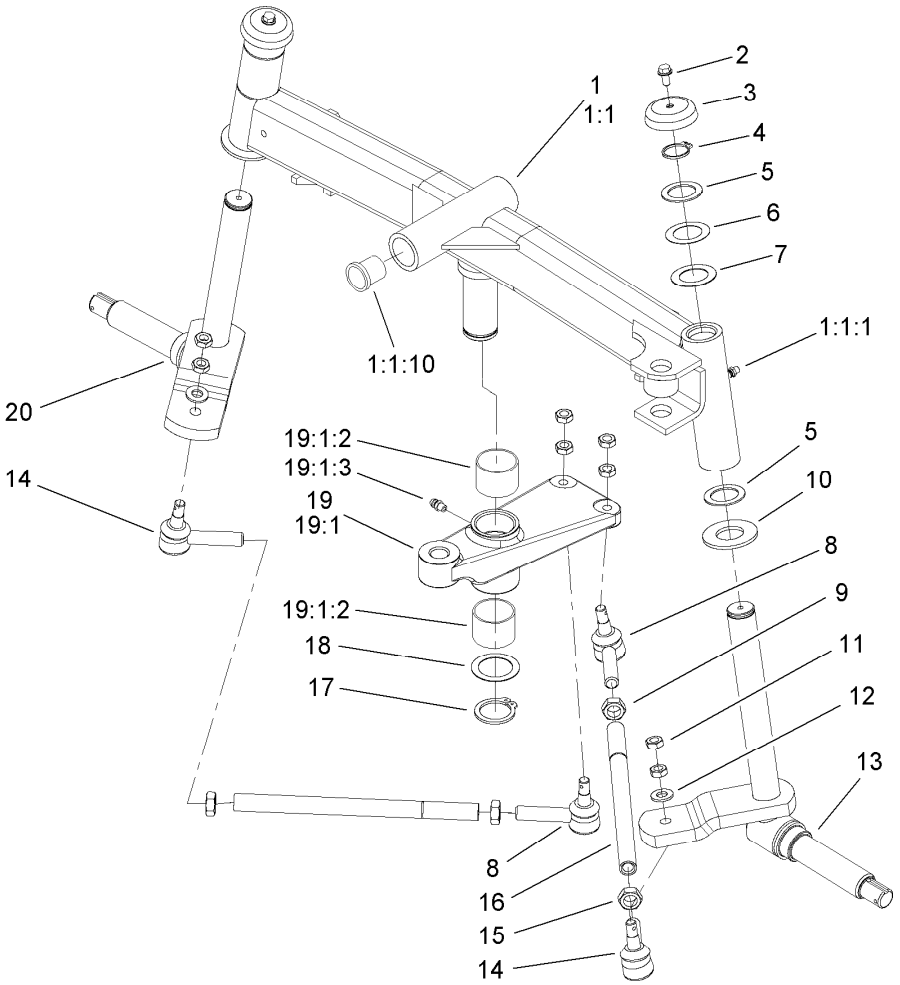


# Rear Axle Assembly

| Ref. | Part Number | Qty. | Description |
|---|---|---|---|
| 1 | 76-3000-03 | 1 | Rear Axle ASM |
| 1:1 | | 1 | Axle-Rear ● |
| 1:1:1 | 302-5 | 3 | Fitting-Grease |
| 1:1:10 | 67-1750 | 6 | Bushing |
| 2 | 3234-13 | 2 | Screw-HHF |
| 3 | 66-2990-03 | 2 | Cap-Spindle |
| 4 | 32151-36 | 2 | Ring-Retaining |
| 5 | 10-8110 | 4 | Washer-Thrust |
| 6 | 56-2460 | 2 | Washer-Flat |
| 7 | 5-1226 | 2 | Washer |
| 8 | 110-9686-03 | 2 | LH Ball Joint ASM |
| 9 | 3220-12 | 2 | Nut-HJ (LH Thread) |
| 10 | 256-121 | 2 | Washer-Thrust |

| Ref. | Part Number | Qty. | Description |
|---|---|---|---|
| 11 | 3220-3 | 8 | Nut-HJ |
| 12 | 3256-24 | 2 | Washer-Flat |
| 13 | 107-2943-03 | 1 | RH Spindle ASM |
| 14 | 110-9685-03 | 2 | RH Ball Joint ASM |
| 15 | 3220-5 | 2 | Nut-Jam |
| 16 | 63-6880 | 2 | Tie Rod-Steering |
| 17 | 32151-77 | 1 | Ring-Retaining, External |
| 18 | 76-2980 | 1 | Washer-Thrust |
| 19 | 100-6598-03 | 1 | Steering Pivot ASM |
| 19:1 | | 1 | Pivot-Steering ● |
| 19:1:2 | 76-2970 | 2 | Bushing-Straight |
| 19:1:3 | 302-5 | 1 | Fitting-Grease |
| 20 | 107-2942-03 | 1 | LH Spindle ASM |

● Not serviced separately

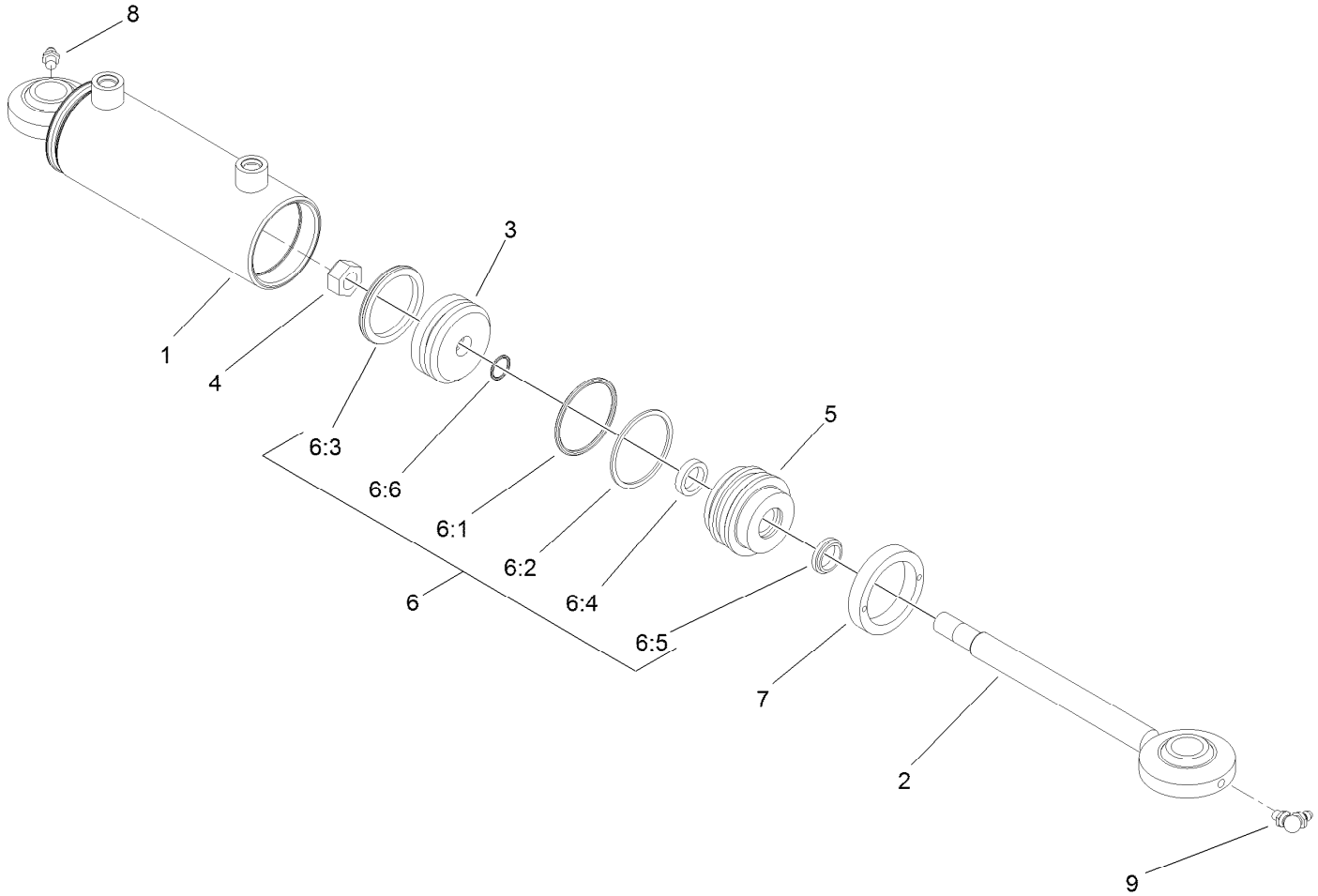


# Steering Cylinder Assembly No. 115-4525

| Ref. | Part Number | Qty. | Description |
|---|---|---|---|
| 1 | | 1 | Barrel Assembly ● |
| 2 | | 1 | Shaft Assembly ● |
| 3 | | 1 | Piston ● |
| 4 | | 1 | Nut-Lock ● |
| 5 | | 1 | Head ● |
| 6 | 115-4526 | 1 | Seal Kit |
| 6:1 | | 1 | O-Ring ● |
| 6:2 | | 1 | Backup ● |
| 6:3 | | 1 | Bp Seal ● |
| 6:4 | | 1 | Bs-Seal ● |
| 6:5 | | 1 | Dust Seal - Dt ● |
| 6:6 | | 1 | O-Ring ● |
| 7 | | 1 | Collar-Internal ● |
| 8 | 302-5 | 1 | Fitting-Grease |
| 9 | 302-40 | 1 | Fitting-Grease, 90 DEG |

● Not serviced separately

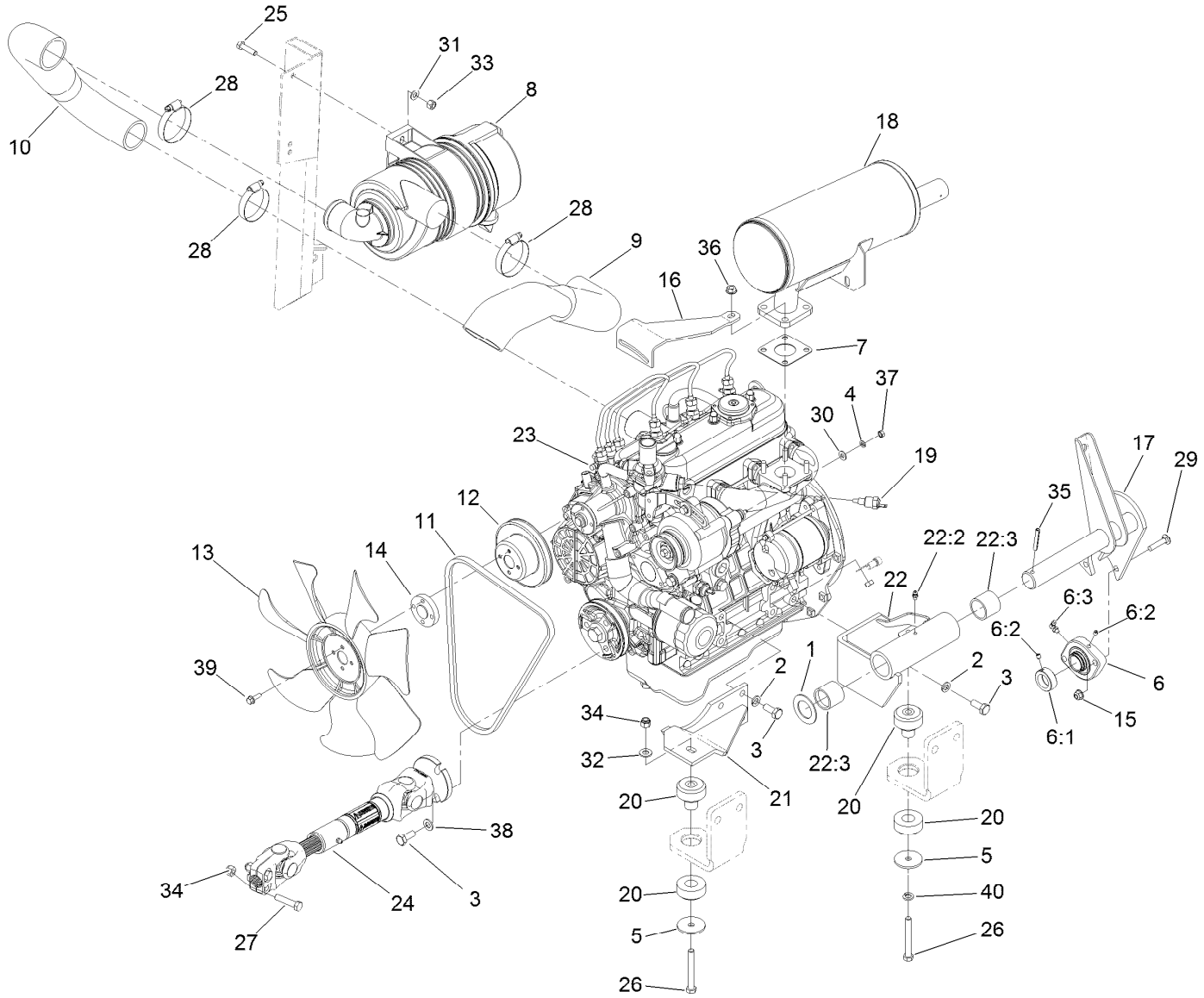


# Engine, Clutch, Air Cleaner and Drive Shaft Assembly

| Ref. | Part Number | Qty. | Description |
|---|---|---|---|
| 1 | 3-4324 | 1 | Washer-Flat |
| 2 | 42-9600 | 8 | Washer-Lock, Spring |
| 3 | 43-0090 | 11 | Screw-HH |
| 4 | 43-5930 | 1 | Washer-Lock, Spring |
| 5 | 63-7400 | 2 | Washer-Rebound |
| 6 | 92-8799 | 1 | Bearing-Flange |
| 6:1 | 251-77 | 1 | Collar-Lock, Bearing |
| 6:2 | 3245-35 | 1 | Screw-Set, HSH |
| 6:3 | 302-40 | 1 | Fitting-Grease, 90 DEG |
| 7 | 98-9611 | 1 | Gasket |
| 8 | 104-3427 | 1 | Air Cleaner ASM |
| 9 | 104-3444 | 1 | Hose-Inlet, Air |
| 10 | 104-3446 | 1 | Hose-Outlet, Air |
| 11 | 104-3494 | 1 | Belt-V |
| 12 | 104-3497 | 1 | Pulley-Fan |
| 13 | 104-4246 | 1 | Fan-Engine |
| 14 | 104-4247 | 1 | Spacer-Fan |
| 15 | 104-8300 | 2 | Nut-Flange, NI |
| 16 | 105-2556-03 | 1 | Brace-Alternator, Upper |

| Ref. | Part Number | Qty. | Description |
|---|---|---|---|
| 17 | 106-4381-03 | 1 | Shaft-Tension, PTO |
| 18 | 108-1363 | 1 | Muffler-Exhaust |
| 19 | 108-8682 | 1 | Thermoswitch |
| 20 | 115-0600 | 2 | Mount-Engine |
| 21 | 117-0831-03 | 1 | Mount-Engine, LH Front |
| 22 | 117-0841 | 1 | LH Rear Engine Mount ASM |
| 22:2 | 302-5 | 1 | Fitting-Grease |
| 22:3 | 256-299 | 2 | Bushing-Straight |
| 23 | 127-9660 | 1 | Engine-Kubota, D1105 |
| 24 | 131-6087 | 1 | Driveshaft ASM |
| 25 | 322-6 | 2 | Screw-HH |
| 26 | 323-14 | 2 | Screw-HH |
| 27 | 323-19 | 2 | Screw-HH |
| 28 | 2412-130 | 3 | Clamp-Hose |
| 29 | 3230-4 | 2 | Screw-CARR |
| 30 | 3256-22 | 1 | Washer-Flat |
| 31 | 3256-23 | 2 | Washer-Flat |
| 32 | 3256-24 | 1 | Washer-Flat |
| 33 | 3296-29 | 2 | Nut-Lock, NI |

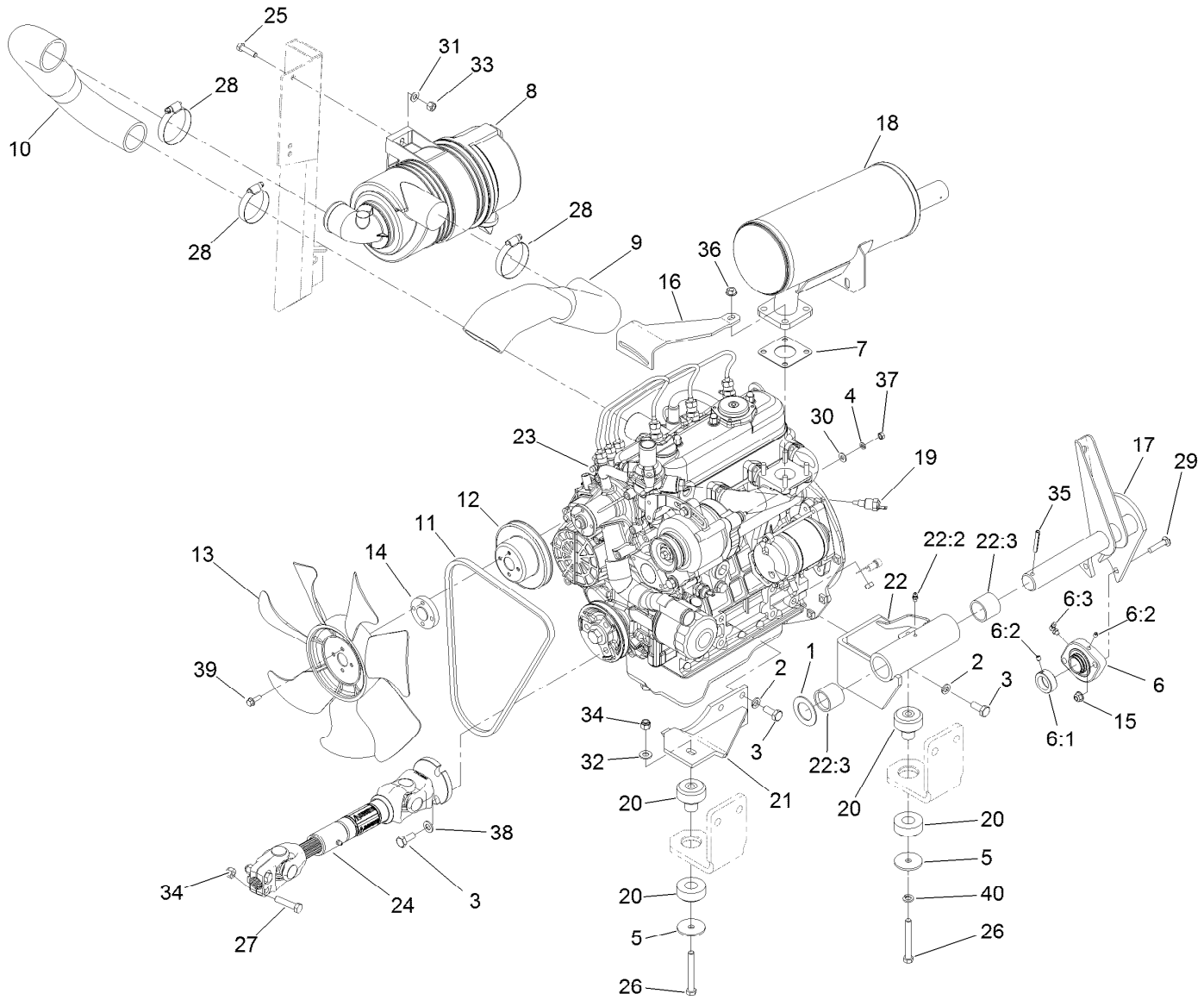


# Engine, Clutch, Air Cleaner and Drive Shaft Assembly (continued)

| Ref. | Part Number | Qty. | Description |
|---|---|---|---|
| 34 | 3296-39 | 3 | Nut-Lock, NI |
| 35 | 32121-32 | 1 | Pin-Roll |
| 36 | 33004-00 | 4 | Nut-HF |
| 37 | 33013-00 | 1 | Nut-Hex |

| Ref. | Part Number | Qty. | Description |
|---|---|---|---|
| 38 | 33095-00 | 3 | Washer-Flat |
| 39 | 33103-020 | 4 | Screw-HHF |
| 40 | 3253-21 | 1 | Washer-Lock |

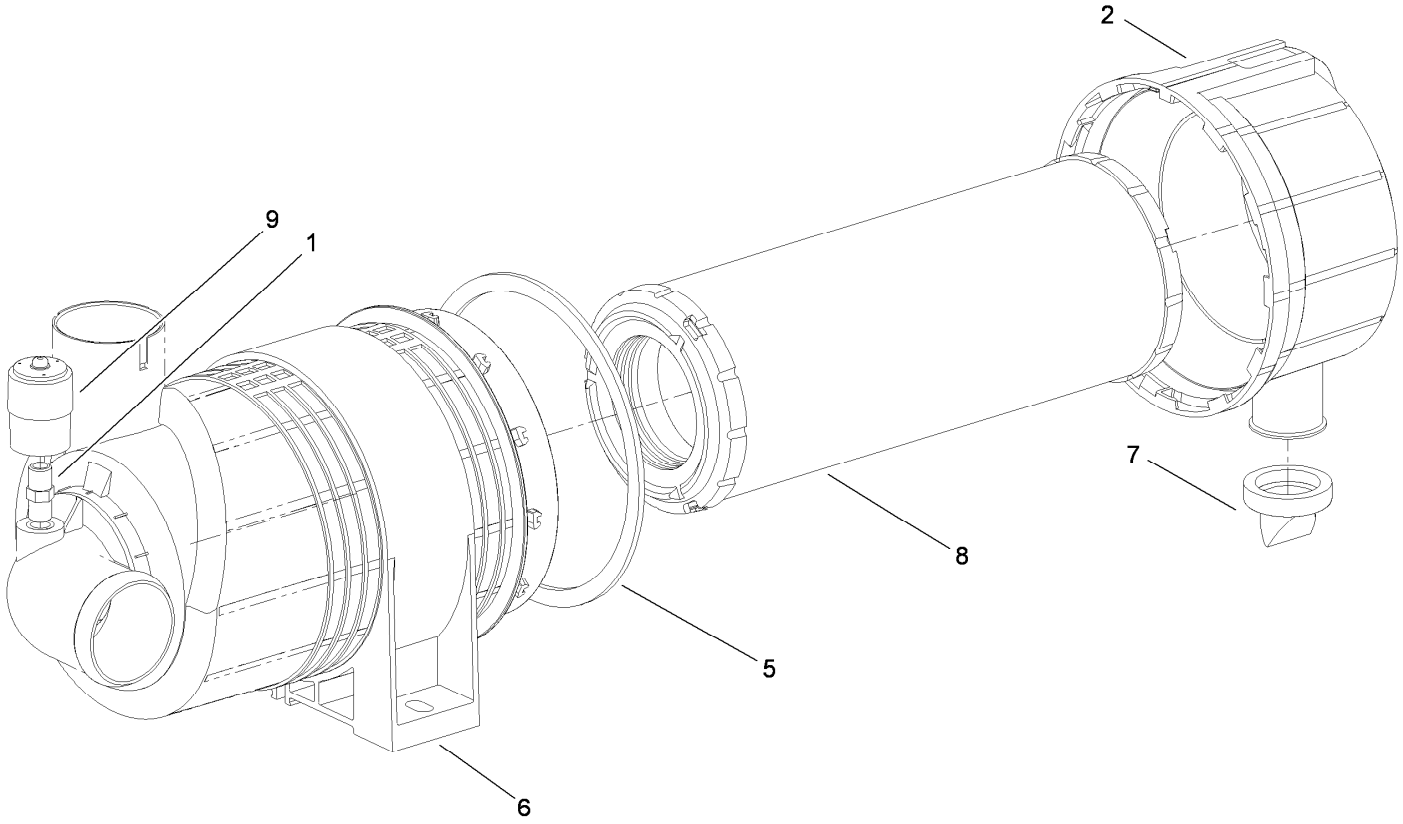


# Air Cleaner Assembly No. 104-3427

| *Ref.* | *Part Number* | *Qty.* | *Description* |
|---|---|---|---|
| 1 | 105-4292 | 1 | Nipple-Pipe |
| 2 | 104-0497 | 1 | Cover |
| 5 | 104-4897 | 1 | Gasket |
| 6 | 98-4525 | 1 | Bracket-Cleaner, Air |
| 7 | 104-0498 | 1 | Valve-Vacuator |
| 8 | 108-3810 | 1 | Filter-Air |
| 9 | 93-9164 | 1 | Indicator-Mini |

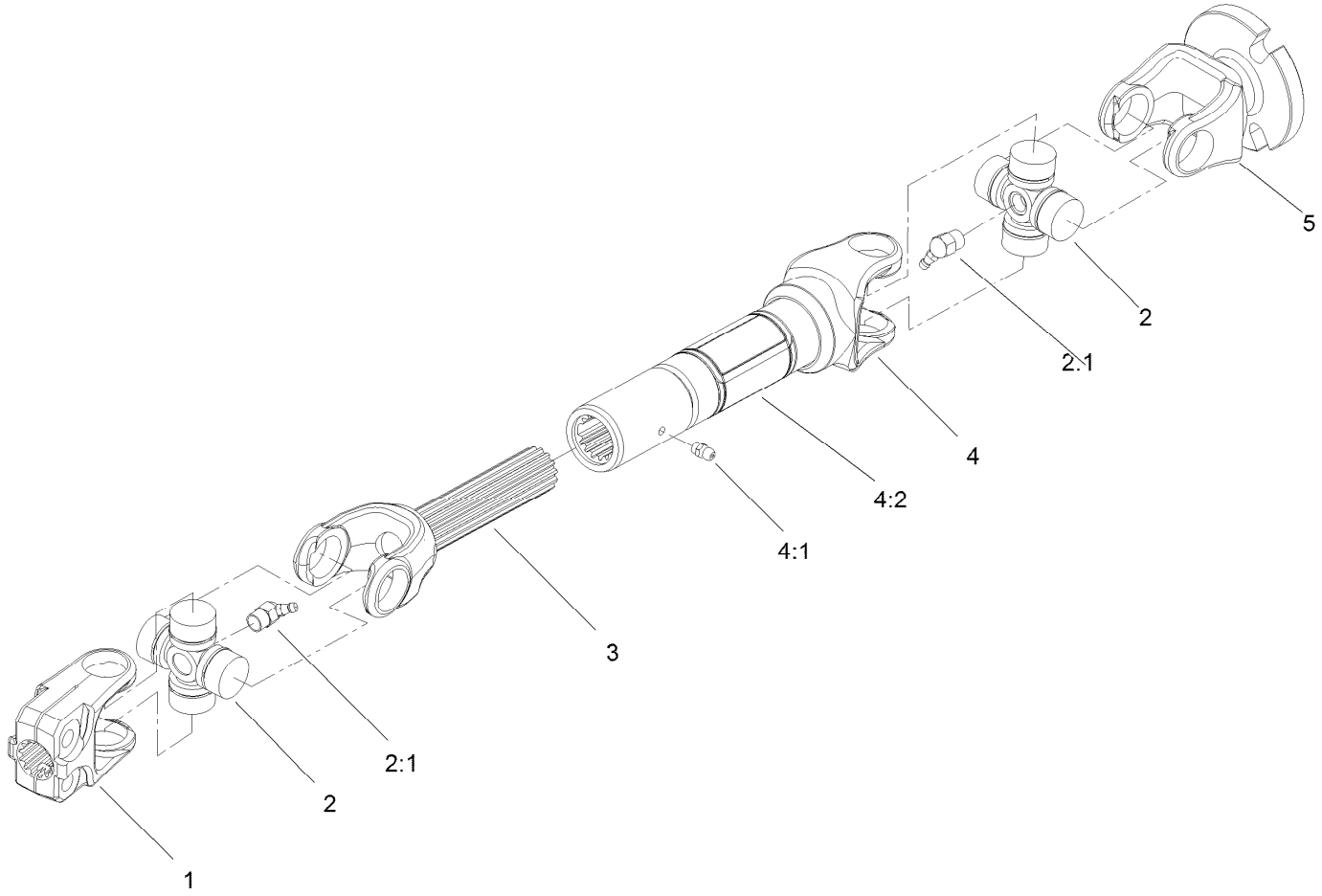


# Driveshaft Assembly No. 131-6087

| *Ref.* | *Part Number* | *Qty.* | *Description* |
|---|---|---|---|
| 1 | 132-7201 | 1 | Yoke-Splined |
| 2 | 112-1687 | 2 | Cross And Bearing Kit |
| 2:1 | 62-3820 | 1 | Fitting-Grease |
| 3 | 98-9765 | 1 | Yoke And Shaft |
| 4 | 108-6551 | 1 | Tube-Yoke, Slip |
| 4:1 | 302-58 | 1 | Fitting-Straight |
| 4:2 | 92-1582 | 1 | Decal-Safety |
| 5 | 132-7200 | 1 | Yoke-Flanged |

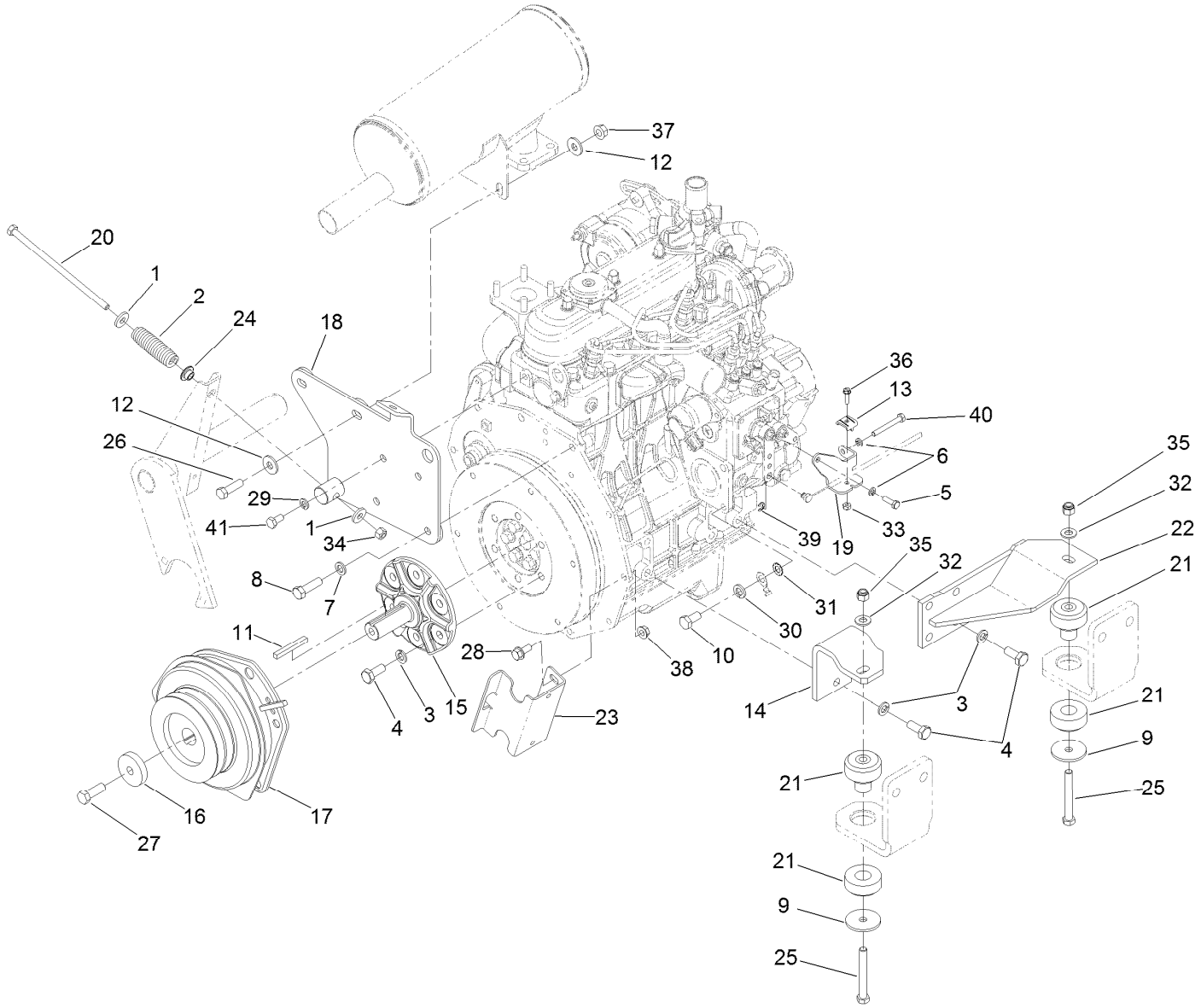


# Engine Mounting and Clutch Assembly

| Ref. | Part Number | Qty. | Description |
|---|---|---|---|
| 1 | 4-2390 | 2 | Washer-Flat |
| 2 | 21-0400-01 | 1 | Spring-Compression |
| 3 | 42-9600 | 12 | Washer-Lock, Spring |
| 4 | 43-0090 | 12 | Screw-HH |
| 5 | 48-7630 | 1 | Screw |
| 6 | 48-8020 | 2 | Washer-Spring |
| 7 | 48-9590 | 2 | Washer-Lock |
| 8 | 56-2140 | 2 | Screw-HH |
| 9 | 63-7400 | 2 | Washer-Rebound |
| 10 | 63-7790 | 1 | Screw-Cap |
| 11 | 63-8150 | 1 | Key-Square |
| 12 | 80-6990 | 4 | Washer-Hardened |
| 13 | 81-1690 | 1 | Clamp-Cable |
| 14 | 104-1713-03 | 1 | Mount-Engine, RH Rear |
| 15 | 104-1715 | 1 | Hub-Clutch |
| 16 | 105-3698 | 1 | Spacer |
| 17 | 107-9061 | 1 | Electric Clutch / Brake ASM |
| 18 | 108-6561-03 | 1 | Mount-Muffler |
| 19 | 110-9682-03 | 1 | Bracket-Throttle |
| 20 | 110-9696 | 1 | Bolt-HH |
| 21 | 115-0600 | 2 | Mount-Engine |

| Ref. | Part Number | Qty. | Description |
|---|---|---|---|
| 22 | 117-0836-03 | 1 | Mount-Engine, RH Front |
| 23 | 120-6568-03 | 1 | Stop-Clutch |
| 24 | 125-9249 | 1 | Spacer-Coupler, Rubber |
| 25 | 323-14 | 2 | Screw-HH |
| 26 | 323-44 | 2 | Screw-HH |
| 27 | 3212-5 | 1 | Screw-HH |
| 28 | 3234-5 | 2 | Screw-HHF |
| 29 | 3253-4 | 2 | Washer-Lock |
| 30 | 3253-6 | 1 | Washer-Lock |
| 31 | 3255-9 | 1 | Washer-Lock |
| 32 | 3256-24 | 2 | Washer-Flat |
| 33 | 3296-2 | 1 | Nut-Lock, NI |
| 34 | 3296-29 | 1 | Nut-Lock, NI |
| 35 | 3296-39 | 2 | Nut-Lock, NI |
| 36 | 32105-13 | 1 | Screw-HWH |
| 37 | 32128-21 | 2 | Nut-HF |
| 38 | 32128-25 | 2 | Nut-HF |
| 39 | 701197 | 1 | E-Ring |
| 40 | 33113-050 | 1 | Screw-HH |
| 41 | 33114-016 | 2 | Screw-HH |

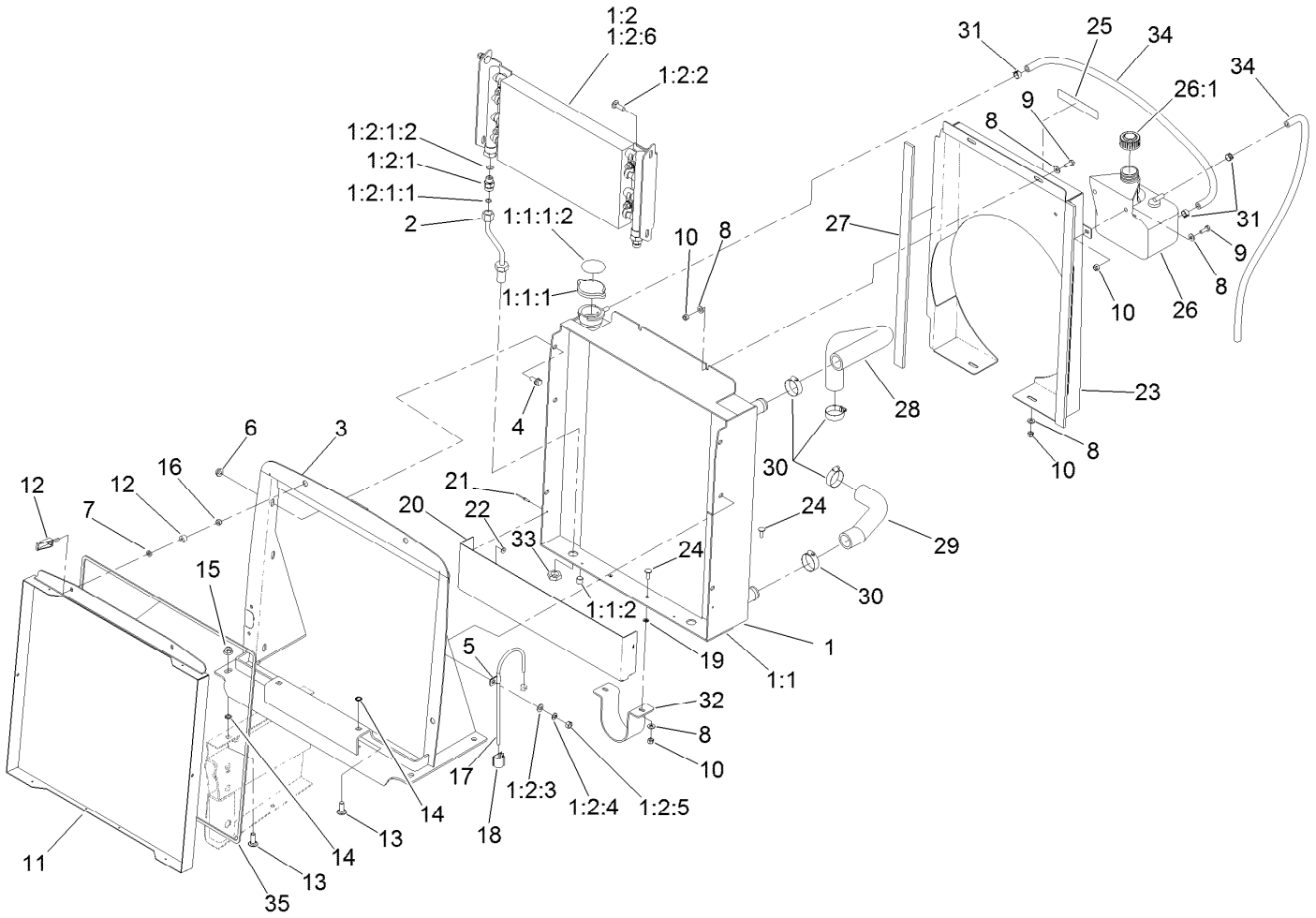


# Radiator and Cooler Assembly

| Ref. | Part Number | Qty. | Description |
|---|---|---|---|
| 1 | 133-6363 | 1 | Cooler Assembly |
| 1:1 | 132-7228 | 1 | Radiator |
| 1:1:1 | 127-4877 | 1 | Radiator Cap ASM |
| 1:1:1:2 | 106-5976 | 1 | Decal-Warning |
| 1:1:2 | 99-8551 | 1 | Plug-Pipe |
| 1:2 | 119-4846 | 1 | Oil Cooler ASM |
| 1:2:1 | 340-2 | 2 | Fitting-Str |
| 1:2:1:1 | 237-22 | 1 | O-Ring |
| 1:2:1:2 | 237-42 | 1 | O-Ring |
| 1:2:2 | 3230-2 | 2 | Bolt-CARR |
| 1:2:3 | 3256-23 | 6 | Washer-Flat |
| 1:2:4 | 3253-4 | 6 | Washer-Lock |
| 1:2:5 | 3217-6 | 6 | Nut-Hex |
| 1:2:6 | | 1 | Cooler ● |
| 2 | 132-7297 | 2 | Tube-HYD, Jump |
| 3 | 133-6384-03 | 1 | Frame-Radiator |
| 4 | 3234-5 | 4 | Screw-HHF |
| 5 | 2412-103 | 1 | Clamp |

| Ref. | Part Number | Qty. | Description |
|---|---|---|---|
| 6 | 32128-20 | 4 | Nut-HF |
| 7 | 55-9620 | 2 | Spacer-Plate, Pivot |
| 8 | 3256-22 | 10 | Washer-Flat |
| 9 | 321-4 | 4 | Screw-HH |
| 10 | 3296-42 | 8 | Nut-Lock, NI |
| 11 | 132-7233-03 | 1 | Screen |
| 12 | 74-5950 | 2 | Latch-Swell |
| 13 | 3231-22 | 6 | Screw-CARR |
| 14 | 32151-72 | 6 | Ring-Retaining |
| 15 | 104-8301 | 4 | Nut-Flange, NI |
| 16 | 1-804254 | 2 | Nut-Lock, HH |
| 17 | 66-3180 | 1 | Tube-Vent |
| 18 | 105-7188 | 1 | Clamp-Adhesive |
| 19 | 106-8737 | 2 | Nut-Retainer |
| 20 | 132-7224-03 | 1 | Sheild-Radiator, Bottom |
| 21 | 3269-17 | 4 | Rivet-Pop |
| 22 | 3269-10 | 2 | Washer-Back |
| 23 | 132-7230-03 | 1 | Shroud-Fan |

● Not serviced separately

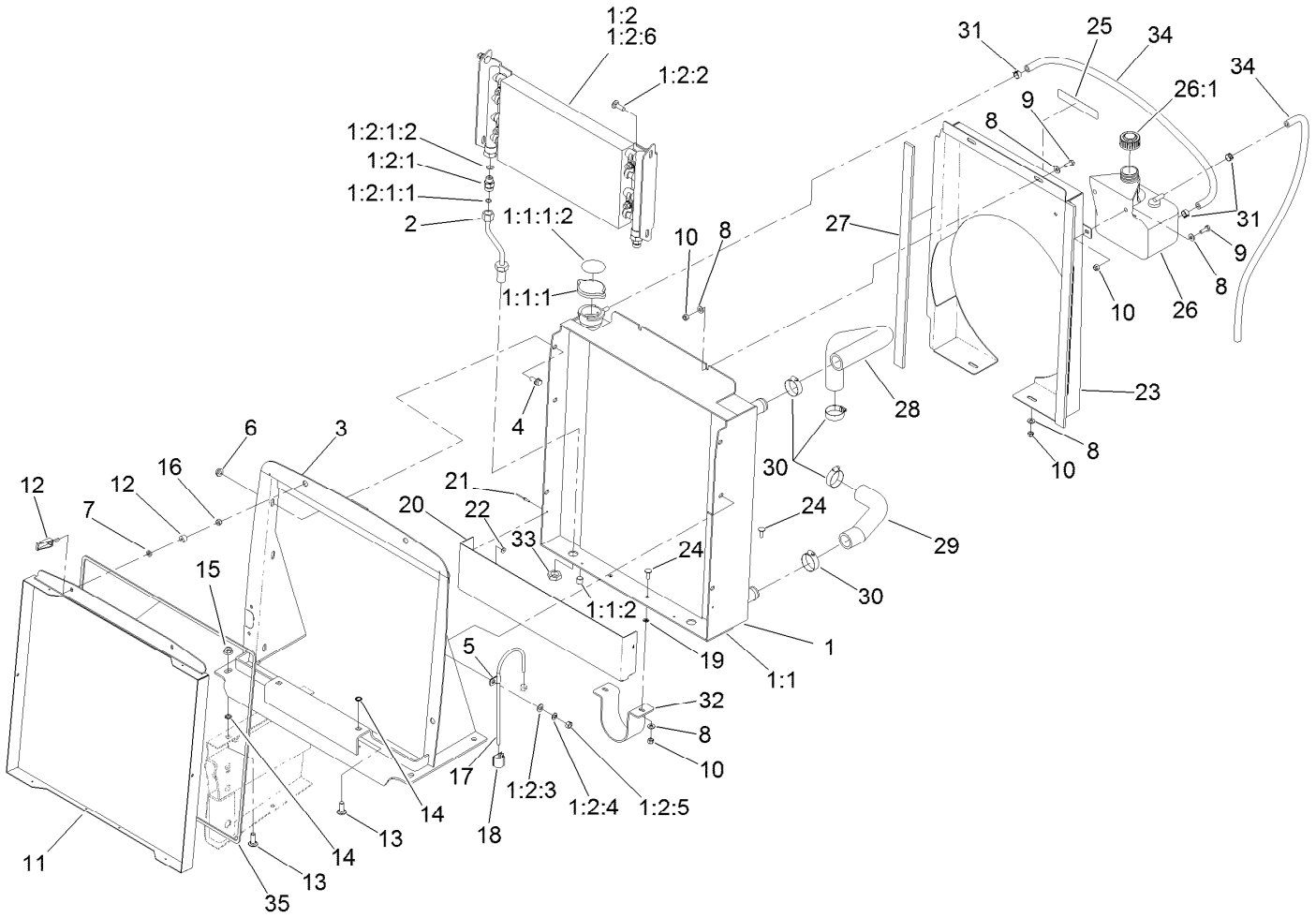


# Radiator and Cooler Assembly (continued)

| Ref. | Part Number | Qty. | Description |
|---|---|---|---|
| 24 | 1-807512 | 4 | Bolt-CARR |
| 25 | 93-7272 | 1 | Decal-Warning |
| 26 | 120-5572 | 1 | Coolant Reservoir ASM |
| 26:1 | 93-5960 | 1 | Cap-Reservoir |
| 27 | 108-9683 | 2 | Strip-Foam |
| 28 | 104-3443 | 1 | Hose-Radiator, Upper |
| 29 | 104-3442 | 1 | Hose-Radiator, Lower |

| Ref. | Part Number | Qty. | Description |
|---|---|---|---|
| 30 | 2412-34 | 4 | Clamp-Hose |
| 31 | 92-2379 | 3 | Clamp-Hose |
| 32 | 132-7225-03 | 1 | Loop-Driveshaft |
| 33 | 340-70 | 2 | Nut-Lock |
| 34 | 109-0308 | 2 | Hose-Fuel |
| 35 | 133-6383 | 1 | Foam-Seal, Radiator Screen |

● Not serviced separately

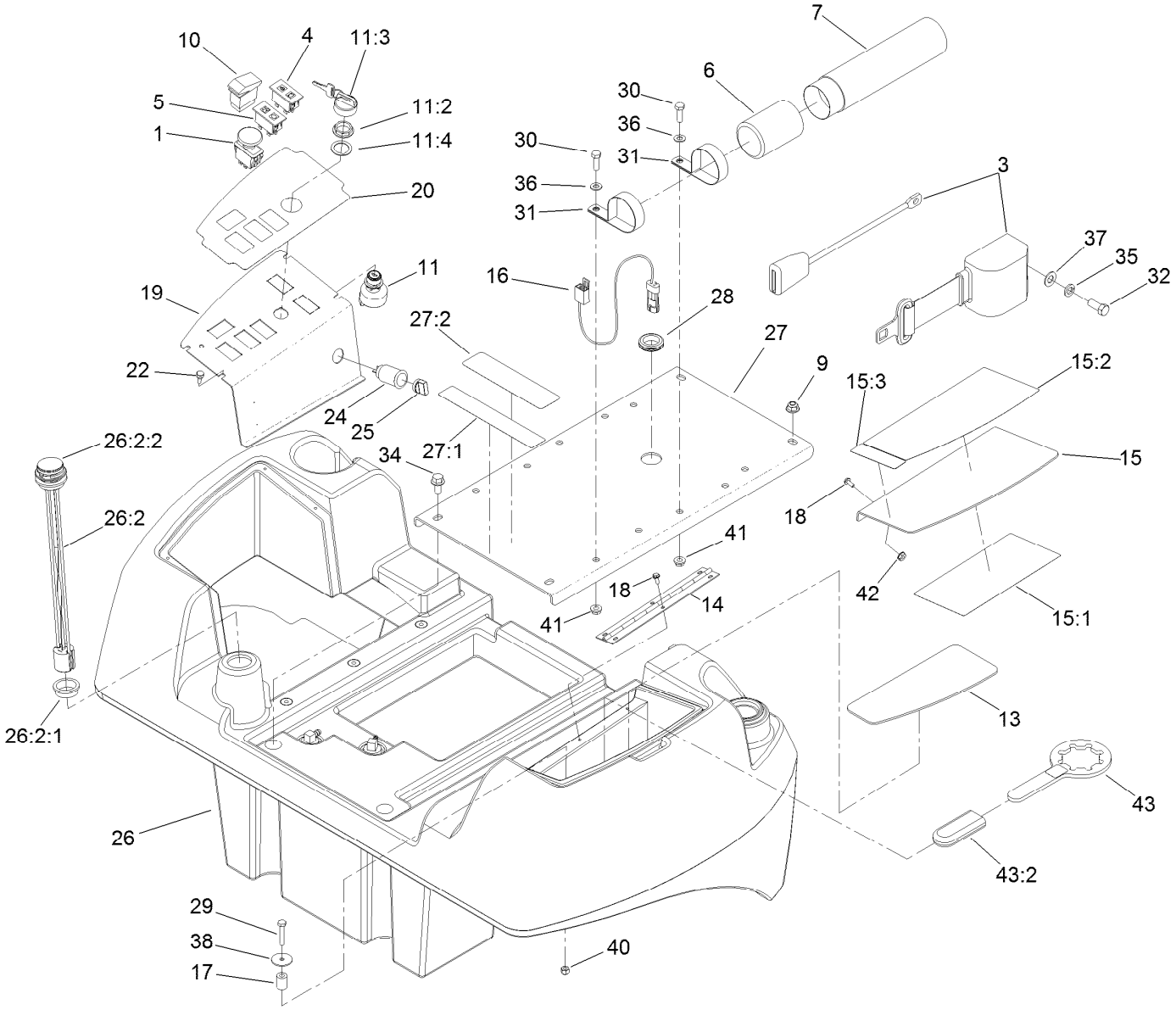


# Fuel Tank and Control Panel Assembly

| Ref. | Part Number | Qty. | Description |
|---|---|---|---|
| 1 | 93-9999 | 1 | Switch-PTO,On-On-None |
| 3 | 100-4928 | 1 | Belt-Seat |
| 4 | 100-8070 | 1 | Lamp-Warning |
| 5 | 100-8071 | 1 | Lamp-Warning |
| 6 | 104-7048 | 1 | Cap-Housing |
| 7 | 104-7050 | 1 | Tube-Manual |
| 9 | 104-8301 | 2 | Nut-Flange, NI |
| 10 | 105-4320 | 1 | Switch |
| 11 | 106-5269 | 1 | Ignition Switch ASM |
| 11:2 | 108-8660 | 1 | Nut-Mounting |
| 11:3 | 106-5270 | 1 | Ignition Key Set |
| 11:4 | 108-8659 | 1 | Washer-Backup |
| 13 | 108-2013 | 1 | Pad-Rubber |
| 14 | 108-2024 | 1 | Hinge |
| 15 | 133-6378 | 1 | Cover ASM |
| 15:1 | 133-6377 | 1 | Decal-Service |
| 15:2 | 133-6375 | 1 | Decal-Warning |
| 15:3 | 117-2718 | 1 | Decal-Arrester, Spark |
| 16 | 108-8657 | 1 | Harness-Wire, Seat |
| 17 | 108-9688 | 1 | Spacer |
| 18 | 112-6349 | 6 | Screw-HWH |

| Ref. | Part Number | Qty. | Description |
|---|---|---|---|
| 19 | 136-1059-03 | 1 | Plate-Control Panel |
| 20 | 119-4840 | 1 | Decal-Panel, Control |
| 22 | 120-6555 | 4 | Screw-Thumb |
| 24 | 99-7411 | 1 | Point-Power |
| 25 | 99-7416 | 1 | Cap |
| 26 | 132-7212 | 1 | Fuel Tank ASM |
| 26:2 | 132-7214 | 1 | Gauge-Fuel |
| 26:2:1 | 119-0508 | 1 | Seal |
| 26:2:2 | 132-7295 | 1 | Dial-Gauge |
| 27 | 132-7298 | 1 | Seat Plate ASM |
| 27:1 | 105-2511 | 1 | Decal-Instructions, Starting |
| 27:2 | 93-7841 | 1 | Decal-Warning |
| 28 | 240-5 | 1 | Grommet |
| 29 | 321-9 | 1 | Screw-HH |
| 30 | 322-5 | 2 | Screw-HH |
| 31 | 2412-133 | 2 | R-Clamp |
| 32 | 3212-4 | 2 | Screw-HH |
| 34 | 3234-1 | 2 | Screw-HHF |
| 35 | 3253-6 | 2 | Washer-Lock |
| 36 | 3256-23 | 2 | Washer-Flat |
| 37 | 3256-25 | 2 | Washer-Flat |

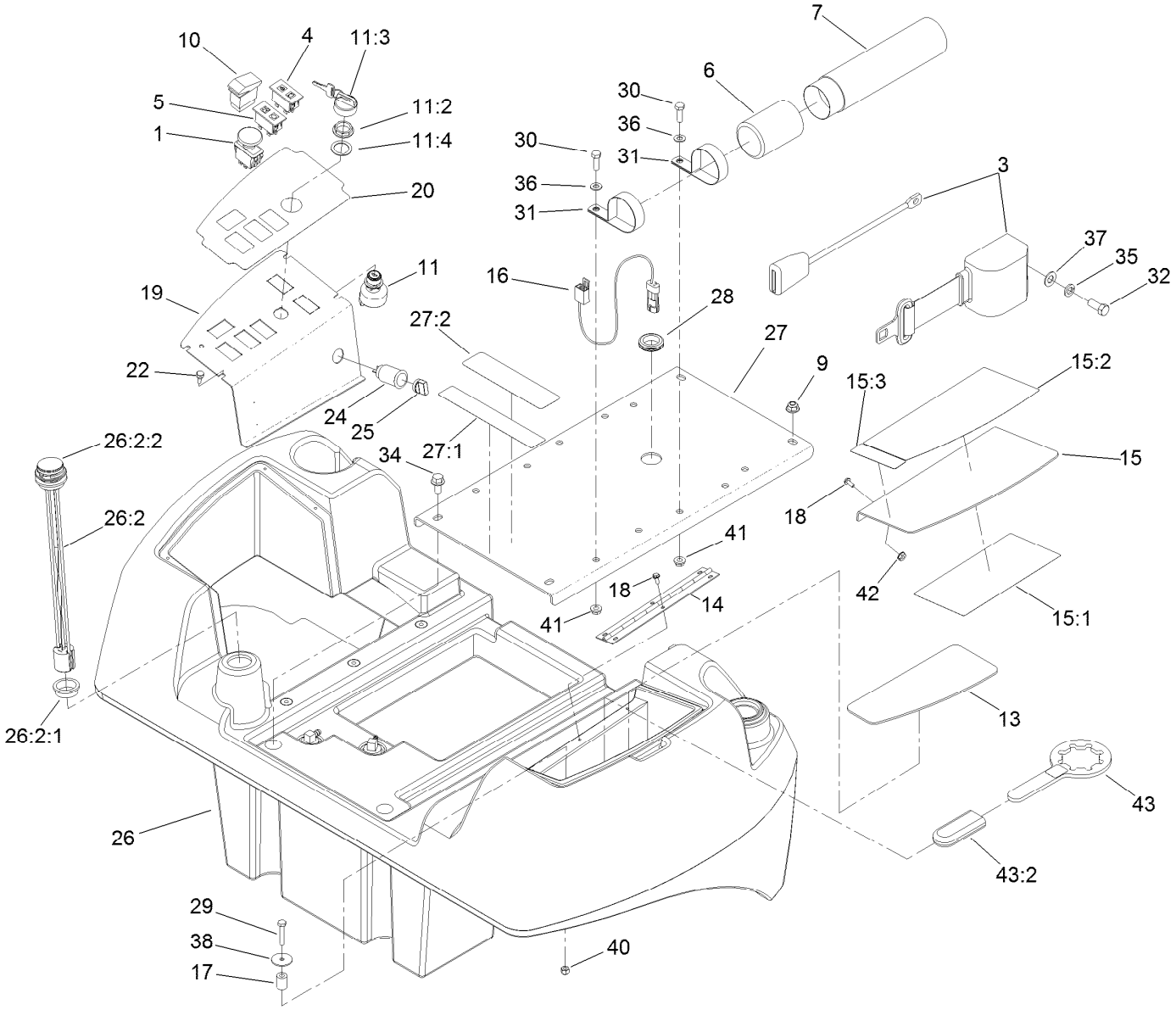


# Fuel Tank and Control Panel Assembly (continued)

| Ref. | Part Number | Qty. | Description |
|---|---|---|---|
| 38 | 3256-55 | 1 | Washer-Flat |
| 40 | 3296-42 | 1 | Nut-Lock, NI |
| 41 | 32128-20 | 2 | Nut-HF |

| Ref. | Part Number | Qty. | Description |
|---|---|---|---|
| 42 | 32149-8 | 3 | Nut-Keps |
| 43 | 121-3874 | 1 | Wrench ASM |
| 43:2 | 119-1846 | 1 | Grip |

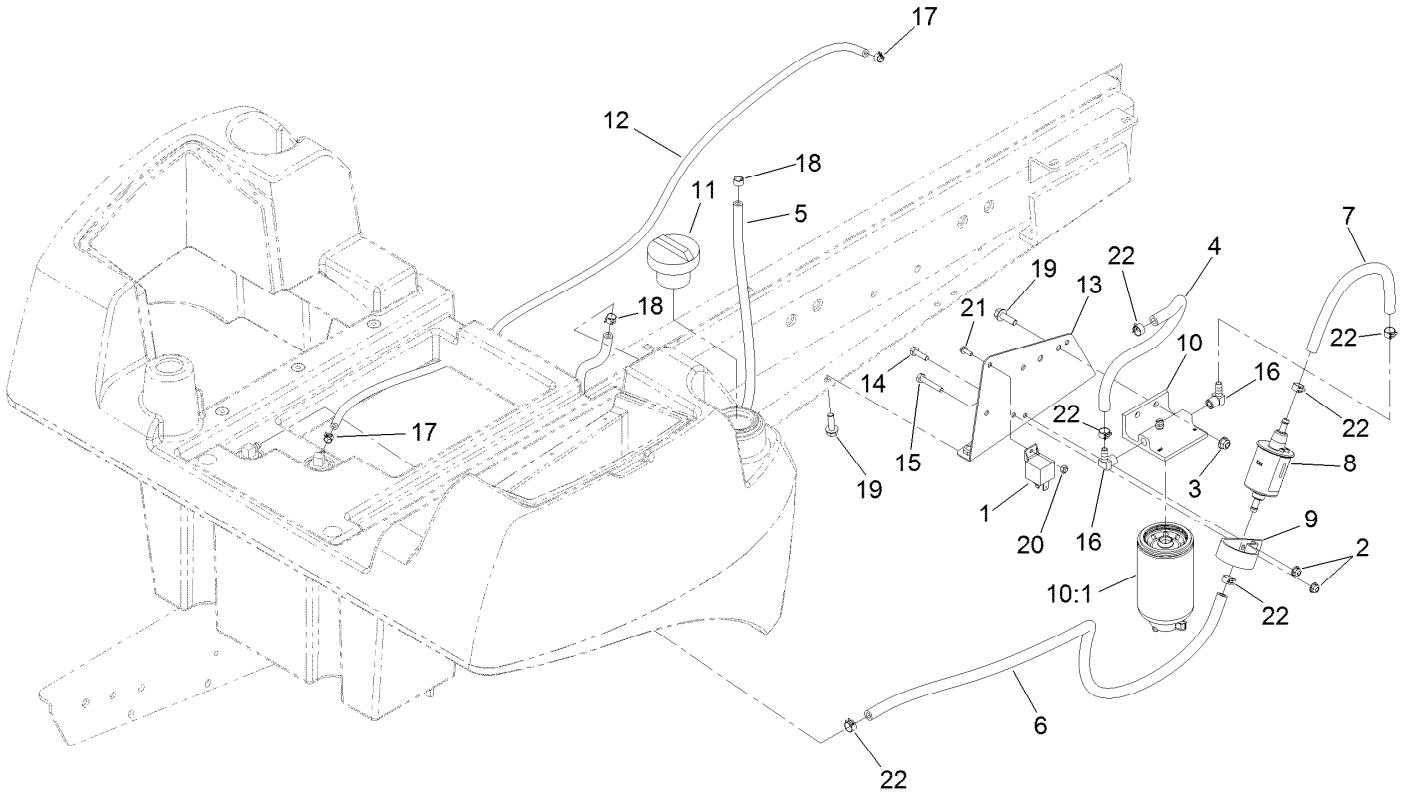


# Fuel Lines and Filter Assembly

| Ref. | Part Number | Qty. | Description |
|---|---|---|---|
| 1 | 99-7435 | 1 | Relay-Power |
| 2 | 104-7201 | 2 | Nut-Flange, NI |
| 3 | 104-8300 | 2 | Nut-Flange, NI |
| 4 | 106-1126 | 1 | Hose-Fuel |
| 5 | 109-0273 | 1 | Hose-Fuel |
| 6 | 110-4007 | 1 | Hose-Fuel |
| 7 | 110-4105 | 1 | Hose-Fuel |
| 8 | 110-8806 | 1 | Pump-Fuel |
| 9 | 110-8817 | 1 | Bracket-Pump, Fuel |
| 10 | 110-9044 | 1 | Separator-Filter |
| 10:1 | 110-9049 | 1 | Filter-Spin On |
| 11 | 115-5305 | 1 | Cap-Fuel |

| Ref. | Part Number | Qty. | Description |
|---|---|---|---|
| 12 | 119-6073 | 1 | Hose-Fuel |
| 13 | 132-7231-03 | 1 | Bracket-Support |
| 14 | 321-5 | 1 | Screw-HH |
| 15 | 321-9 | 1 | Screw-HH |
| 16 | 353-781 | 2 | Fitting-Elbow |
| 17 | 2412-80 | 2 | Clamp-Hose |
| 18 | 2412-98 | 2 | Clamp-Hose |
| 19 | 3234-17 | 4 | Screw-HHF |
| 20 | 3296-2 | 1 | Nut-Lock, NI |
| 21 | 32105-23 | 1 | Screw |
| 22 | 92-2379 | 6 | Clamp-Hose |

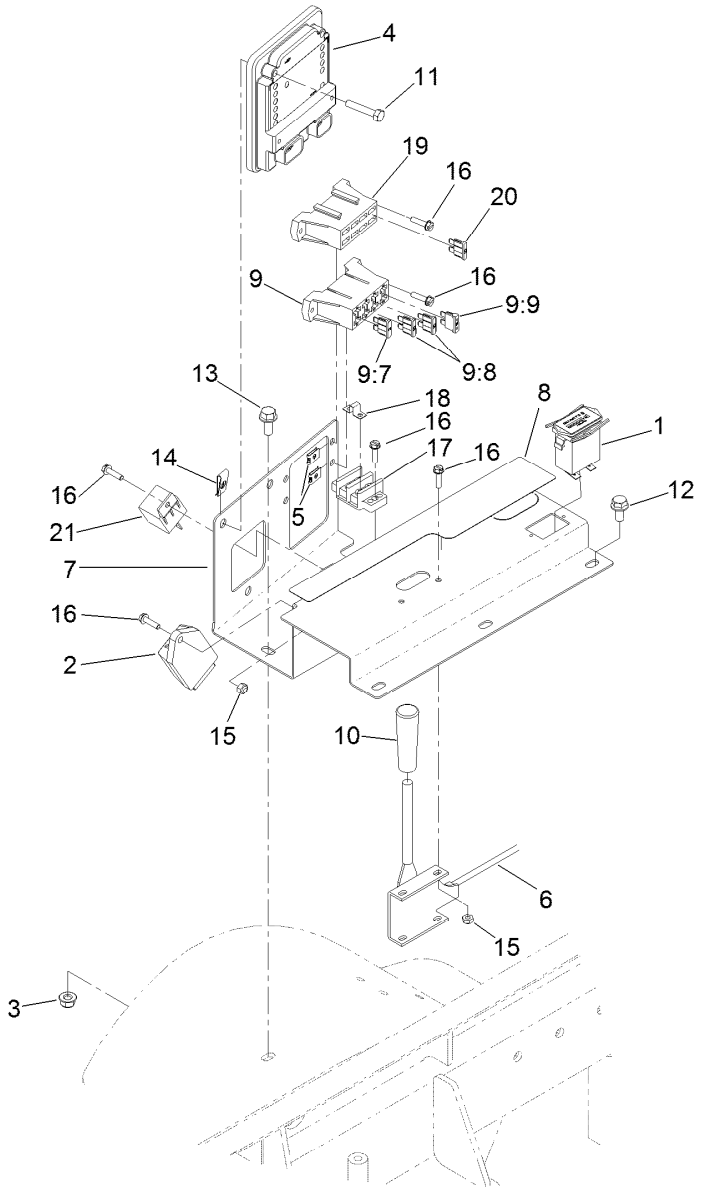


# Throttle Control Assembly

| Ref. | Part Number | Qty. | Description |
|---|---|---|---|
| 1 | 1-513374 | 1 | Meter-Hour |
| 2 | 98-7611 | 1 | Controller-Glow |
| 3 | 104-8300 | 1 | Nut-Flange, NI |
| 4 | 106-9277 | 1 | Module-Control, Standard |
| 5 | 107-1013 | 7 | Nut-Speed, U-Type |
| 6 | 117-0824 | 1 | Control-Throttle, Diesel |
| 7 | 119-4831-03 | 1 | Console |
| 8 | 119-4832 | 1 | Decal-Panel, Lower |
| 9 | 122-0987 | 1 | Harness-Wire, Main |
| 9:7 | 94-6710 | 1 | Fuse-2 Amp |
| 9:8 | 218-578 | 3 | Fuse-Blade, 10 Amp |
| 9:9 | 109355 | 1 | Fuse-Blade, 15 Amp |

| Ref. | Part Number | Qty. | Description |
|---|---|---|---|
| 10 | 233-39 | 1 | Knob-Control |
| 11 | 321-13 | 3 | Screw-HH |
| 12 | 3234-14 | 3 | Screw-HHF |
| 13 | 3234-5 | 1 | Screw-HHF |
| 14 | 3290-199 | 3 | Nut-Speed |
| 15 | 3296-2 | 3 | Nut-Lock, NI |
| 16 | 32105-13 | 10 | Screw-HWH |
| 17 | 42862 | 1 | Block-Terminal, Ground |
| 18 | 42863 | 1 | Strip-Jumper |
| 19 | 92-2641 | 1 | Block-Fuse |
| 20 | 218-578 | 1 | Fuse-Blade, 10 Amp |
| 21 | 99-7435 | 1 | Relay-Power |

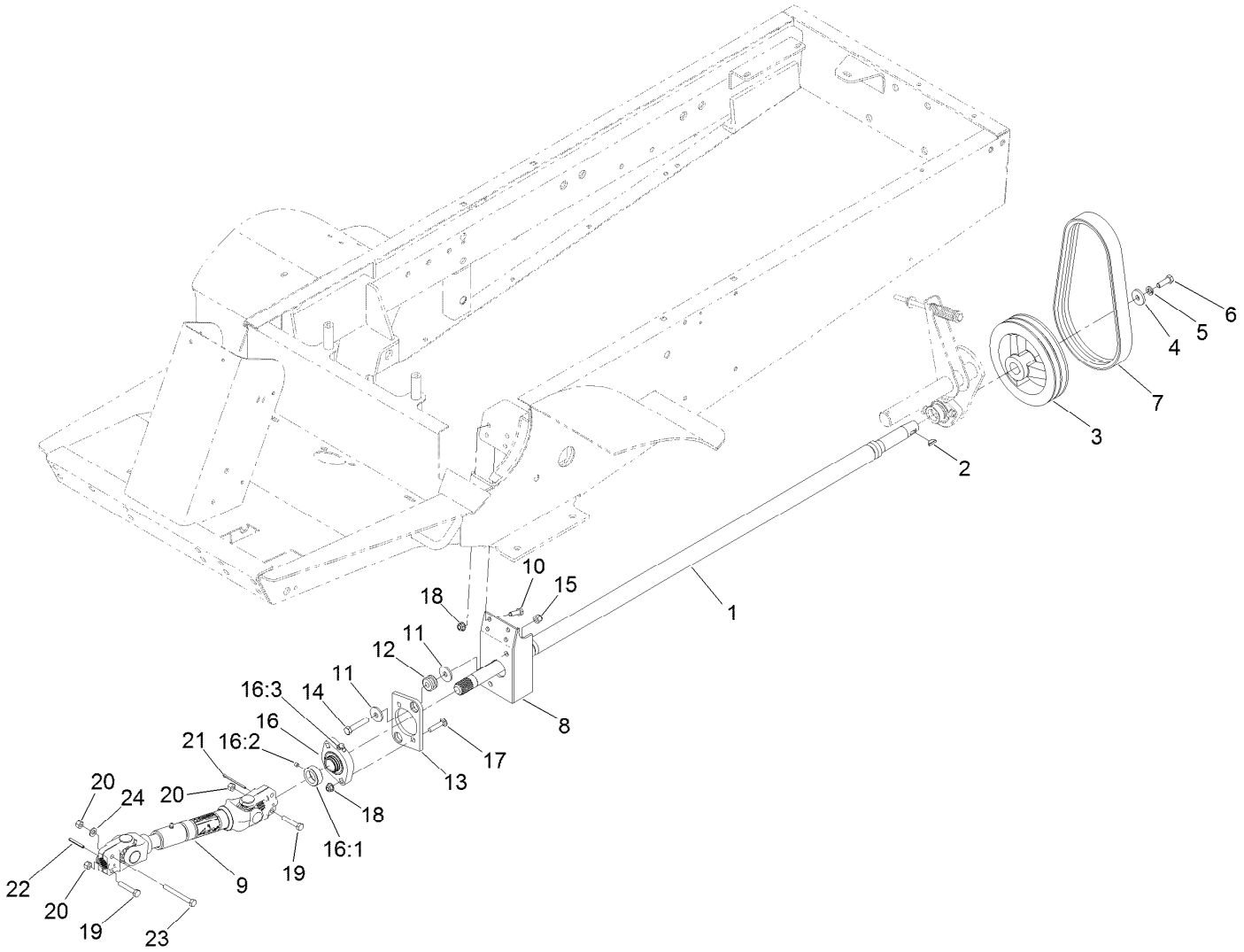


# PTO Drive Assembly

| Ref. | Part Number | Qty. | Description |
|---|---|---|---|
| 1 | 92-8855-03 | 1 | Shaft-PTO |
| 2 | 3257-5 | 1 | Key-Woodruff |
| 3 | 43-5320-03 | 1 | Pulley-PTO |
| 4 | 29-4730 | 1 | Washer-Flat |
| 5 | 3253-21 | 1 | Washer-Lock |
| 6 | 323-18 | 1 | Screw-HH |
| 7 | 63-6240 | 1 | V-Belt |
| 8 | 132-7260-03 | 1 | Mount-Bearing, PTO |
| 9 | 108-1366 | 1 | PTO Drive Shaft ASM |
| 10 | 322-5 | 4 | Screw-HH |
| 11 | 63-8410 | 4 | Washer |
| 12 | 63-9750 | 2 | Mount |
| 13 | 84-7580 | 1 | Plate-Support, Bushing |
| 14 | 323-10 | 2 | Screw-HH |
| 15 | 3296-39 | 2 | Nut-Lock, NI |
| 16 | 92-8799 | 1 | Bearing-Flange |
| 16:1 | 251-77 | 1 | Collar-Lock, Bearing |
| 16:2 | 3245-35 | 1 | Screw-Set, HSH |
| 16:3 | 302-40 | 1 | Fitting-Grease, 90 DEG |
| 17 | 3230-4 | 2 | Screw-CARR |
| 18 | 104-8300 | 6 | Nut-Flange, NI |
| 19 | 322-9 | 4 | Screw-HH |
| 20 | 3296-29 | 5 | Nut-Lock, NI |
| 21 | 3272-15 | 1 | Pin-Cotter |
| 22 | 32121-34 | 1 | Pin-Roll |
| 23 | 322-14 | 1 | Screw-HH |
| 24 | 3256-23 | 1 | Washer-Flat |

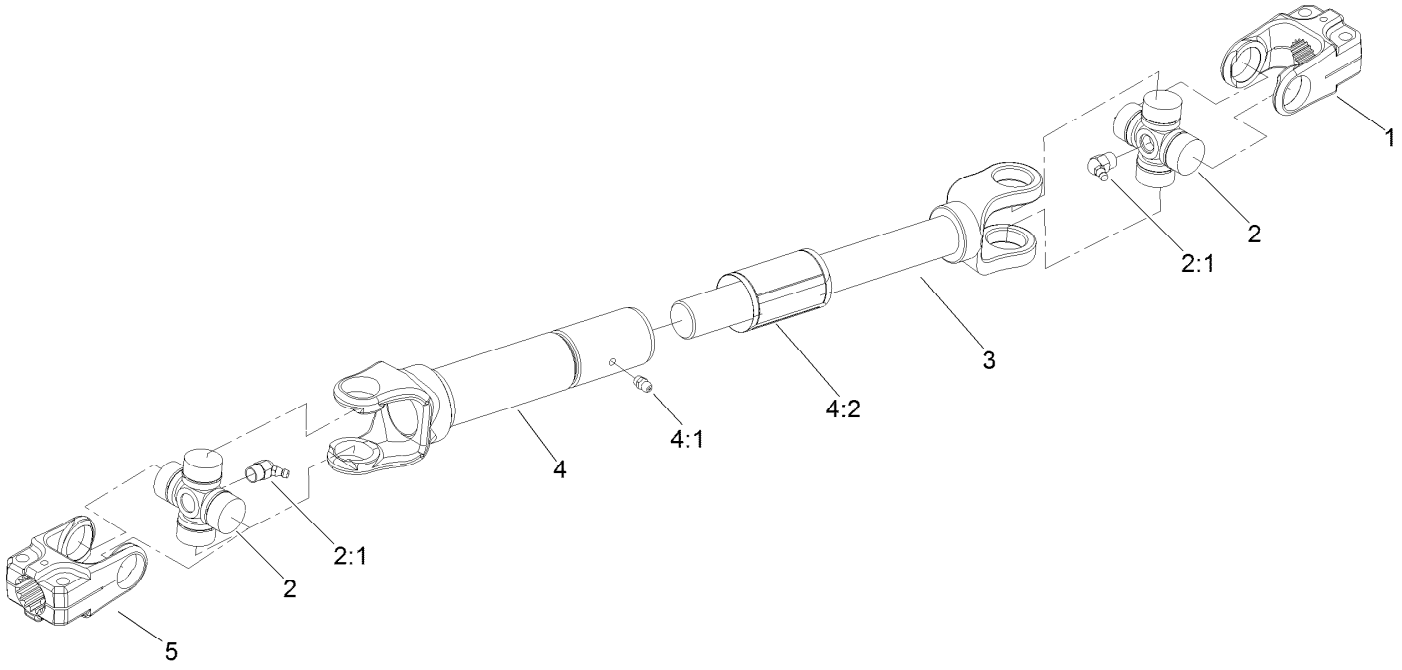


# PTO Driveshaft Assembly No. 108-1366

| *Ref.* | *Part Number* | *Qty.* | *Description* |
|---|---|---|---|
| 1 | 54-9040 | 1 | Yoke-End |
| 2 | 54-9180 | 2 | U-Joint Kit |
| 2:1 | 62-3820 | 1 | Fitting-Grease |
| 3 | 108-6550 | 1 | Shaft-Yoke, Slip |
| 4 | 108-6551 | 1 | Tube-Yoke, Slip |
| 4:1 | 302-58 | 1 | Fitting-Straight |
| 4:2 | 92-1582 | 1 | Decal-Safety |
| 5 | 54-9090 | 1 | Yoke-End |

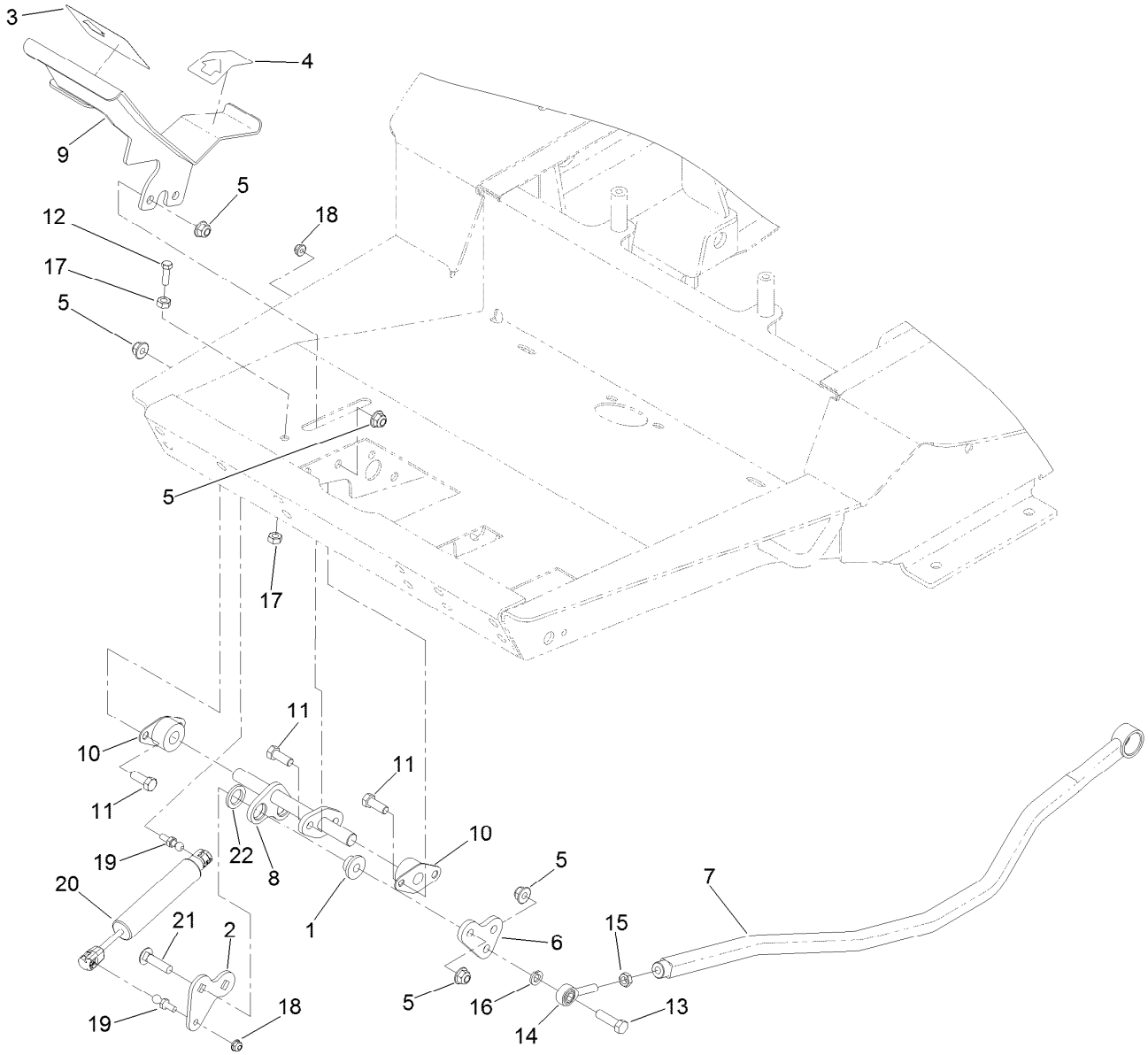


# Traction Pedal Assembly

| Ref. | Part Number | Qty. | Description |
|---|---|---|---|
| 1 | 133-6397 | 2 | Bushing-Delrin |
| 2 | 133-6364 | 1 | Plate-Damper |
| 3 | 94-3307 | 1 | Pad-Pedal, Traction |
| 4 | 94-3308 | 1 | Pad-Pedal, Traction |
| 5 | 104-8301 | 9 | Nut-Flange, NI |
| 6 | 125-4401 | 1 | Plate-Linkage, Traction |
| 7 | 132-7236-03 | 1 | Rod-Traction |
| 8 | 132-7288 | 1 | Pivot-Traction Pedal |
| 9 | 132-7290-03 | 1 | Pedal-Traction |
| 10 | 256-236 | 2 | Bearing-Mount, Flange |
| 11 | 323-6 | 6 | Screw-HH |

| Ref. | Part Number | Qty. | Description |
|---|---|---|---|
| 12 | 323-7 | 1 | Screw-HH |
| 13 | 323-29 | 1 | Screw-HH |
| 14 | 2411-36 | 1 | Bearing-End, Rod |
| 15 | 3220-3 | 1 | Nut-HJ |
| 16 | 3253-21 | 1 | Washer-Lock |
| 17 | 3217-7 | 2 | Nut-Hex |
| 18 | 104-7201 | 2 | Nut-Flange, NI |
| 19 | 132-6917 | 2 | Ball Stud |
| 20 | 133-1171 | 1 | Damper-Non Cavitating |
| 21 | 3231-4 | 2 | Screw-CARR |
| 22 | 133-6398 | 2 | Washer-Delrin |

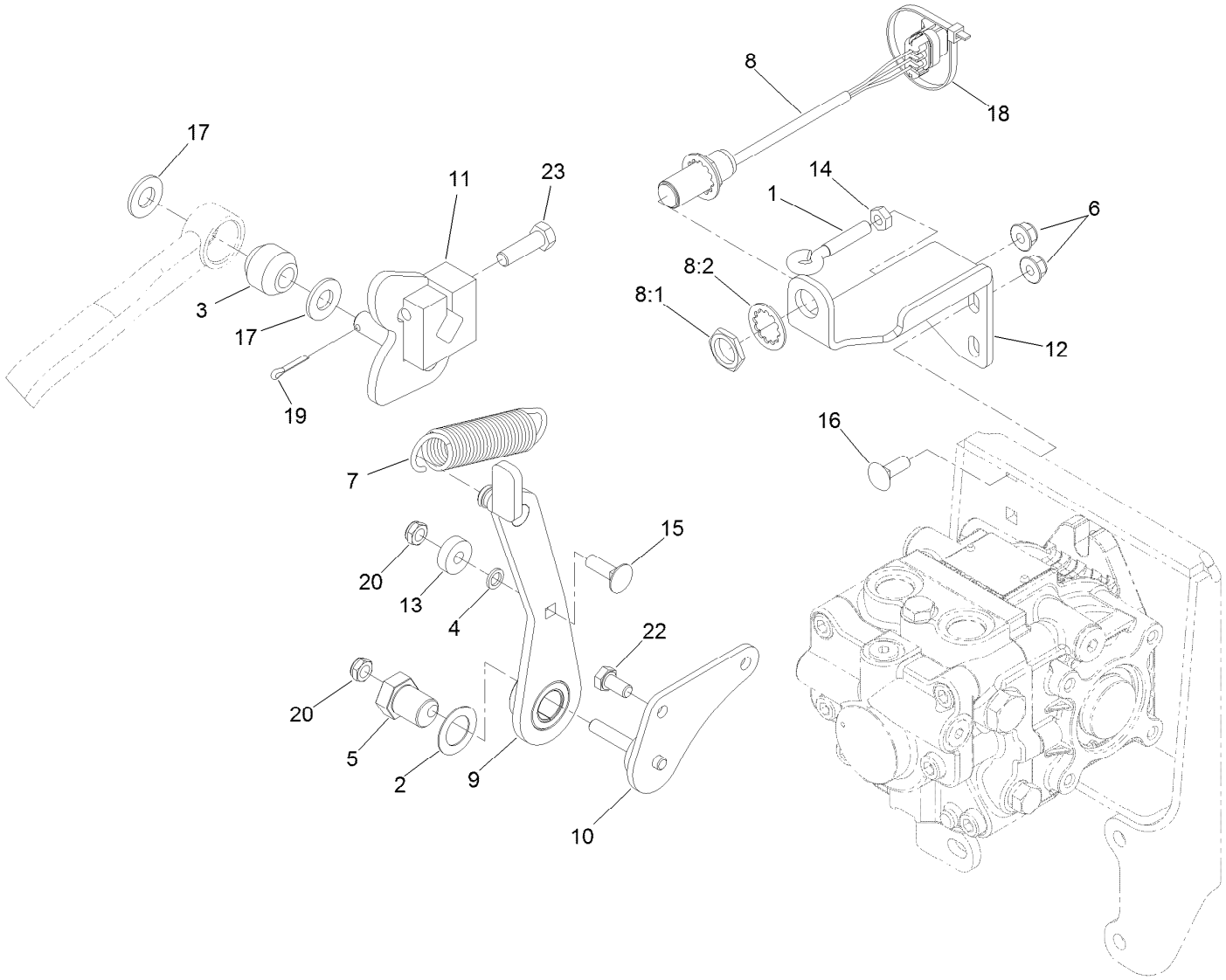


# Transmission Linkage Assembly

| Ref. | Part Number | Qty. | Description |
|---|---|---|---|
| 1 | 1-303238 | 1 | Eyebolt-Thread, RH |
| 2 | 3-6498 | 1 | Washer-Thrust |
| 3 | 23-2270 | 1 | Bushing-Rubber |
| 4 | 75-5470 | 1 | Spacer-Bearing |
| 5 | 93-2111 | 1 | Stud-Traction |
| 6 | 104-8300 | 3 | Nut-Flange, NI |
| 7 | 115-4712 | 1 | Spring-Extension |
| 8 | 115-5300 | 1 | Proximity Switch ASM |
| 8:1 | 117-3207 | 2 | Nut-Hex |
| 8:2 | 117-3208 | 2 | Washer-Lock, Internal Tooth |
| 9 | 130-8730 | 1 | Arm-Neutral |
| 10 | 130-8734 | 1 | Pivot |

| Ref. | Part Number | Qty. | Description |
|---|---|---|---|
| 11 | 133-6359 | 1 | Cam-Neutral |
| 12 | 133-6393-03 | 1 | Bracket-Sensor |
| 13 | 251-259 | 1 | Bearing-Ball |
| 14 | 3218-2 | 1 | Nut-Jam |
| 15 | 3230-2 | 1 | Bolt-CARR |
| 16 | 3230-16 | 2 | Screw-CARR |
| 17 | 3256-26 | 2 | Washer-Flat |
| 18 | 3290-379 | 1 | Tie-Cable |
| 19 | 3272-10 | 1 | Pin-Cotter |
| 20 | 3296-47 | 2 | Nut-Lock, NI |
| 22 | 33114-016 | 2 | Screw-HH |
| 23 | 323-7 | 1 | Screw-HH |

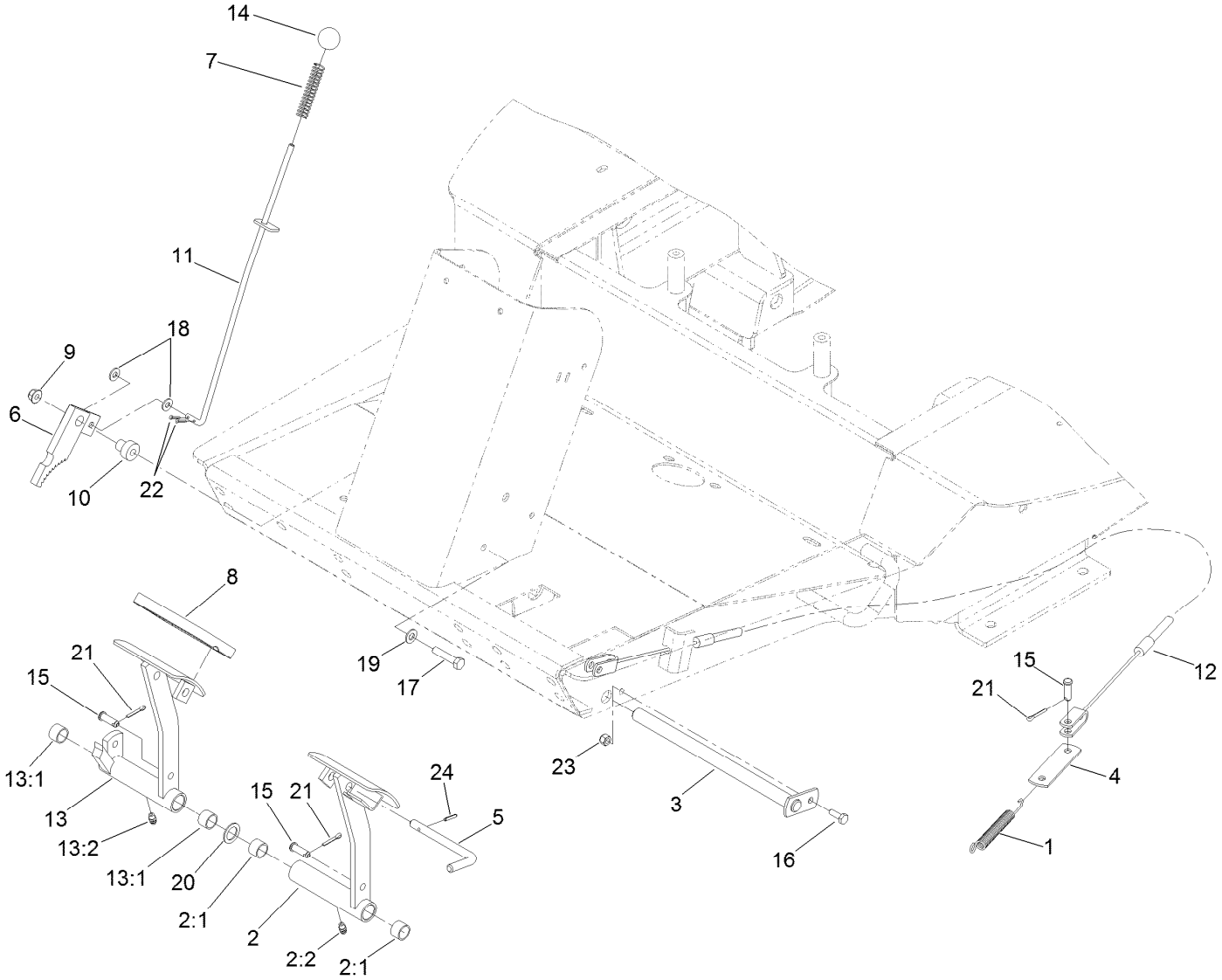


# Brake Pedal and Linkage Assembly

| Ref. | Part Number | Qty. | Description |
|---|---|---|---|
| 1 | 3-7243 | 2 | Spring-Extension |
| 2 | 63-6180 | 1 | Pedal-Brake, LH |
| 2:1 | 256-42 | 2 | Bushing |
| 2:2 | 302-5 | 1 | Fitting-Grease |
| 3 | 63-6210-03 | 1 | Pin-Brake |
| 4 | 63-6750 | 2 | Link-Cable, Brake |
| 5 | 63-7880 | 1 | Pin-Latch, Brake |
| 6 | 63-7900-03 | 1 | Rack |
| 7 | 71-8310 | 1 | Spring-Compression |
| 8 | 93-8742 | 2 | Footpad-Brake |
| 9 | 104-8300 | 1 | Nut-Flange, NI |
| 10 | 105-7156 | 1 | Spacer |
| 11 | 105-7168 | 1 | Rod ASM |
| 12 | 108-6556 | 2 | Cable-Brake |

| Ref. | Part Number | Qty. | Description |
|---|---|---|---|
| 13 | 120-6597 | 1 | RH Brake Pedal ASM |
| 13:1 | 256-42 | 2 | Bushing |
| 13:2 | 302-5 | 1 | Fitting-Grease |
| 14 | 233-17 | 1 | Knob |
| 15 | 283-58 | 4 | Pin-Clevis |
| 16 | 321-4 | 1 | Screw-HH |
| 17 | 322-7 | 1 | Screw-HH |
| 18 | 3256-22 | 2 | Washer-Flat |
| 19 | 3256-23 | 1 | Washer-Flat |
| 20 | 3256-69 | 2 | Washer-Flat |
| 21 | 3272-10 | 4 | Pin-Cotter |
| 22 | 3272-5 | 2 | Pin-Cotter |
| 23 | 3296-42 | 1 | Nut-Lock, NI |
| 24 | 32121-50 | 1 | Pin-Spring |

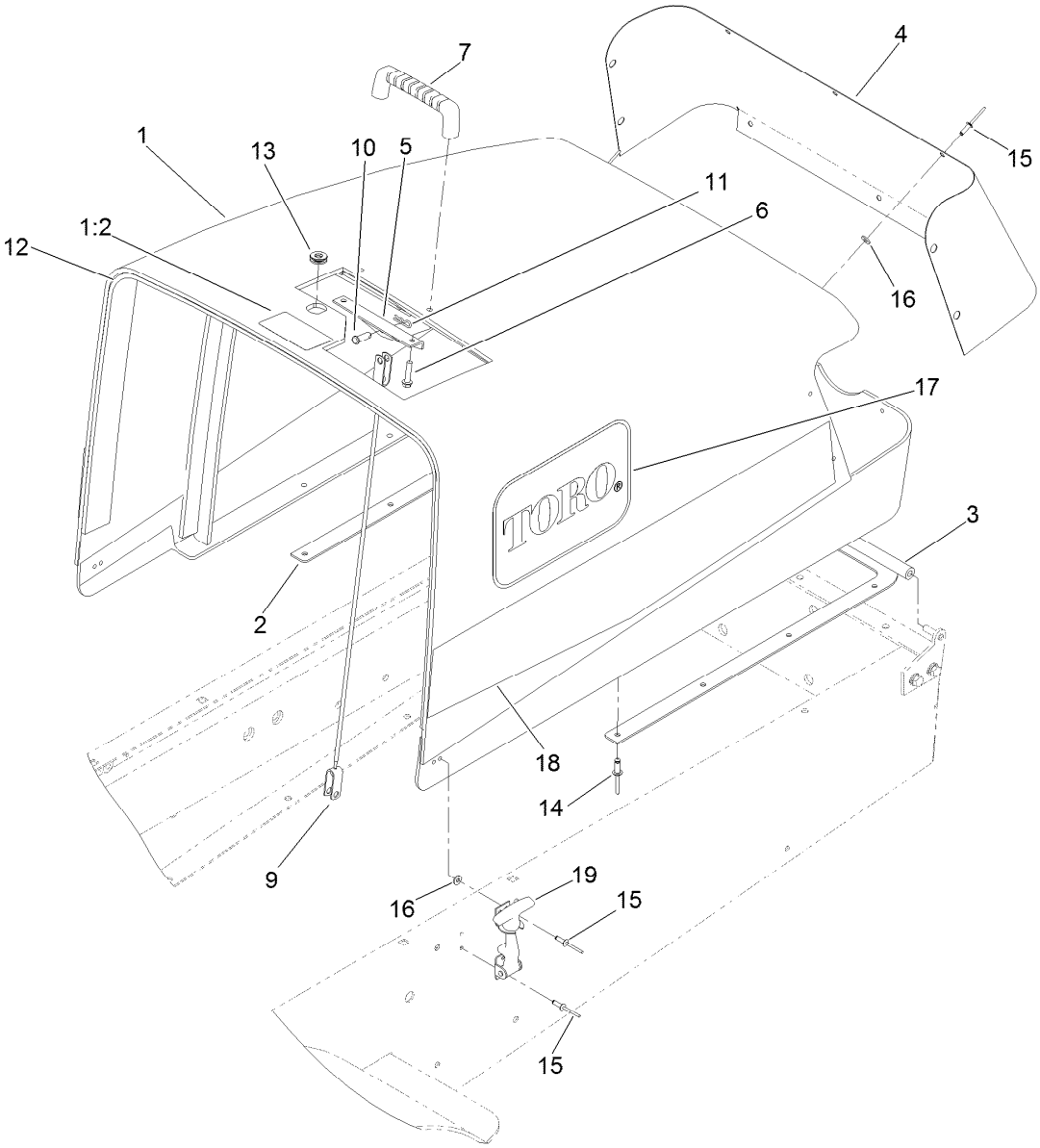


# Hood Assembly

| Ref. | Part Number | Qty. | Description |
|---|---|---|---|
| 1 | 119-2195 | 1 | Hood ASM |
| 1:2 | 106-6754 | 1 | Decal-Danger |
| 2 | 105-4277-03 | 1 | RH Hood Hinge ASM |
| 3 | 105-4278-03 | 1 | LH Hood Hinge ASM |
| 4 | 105-0006-03 | 1 | Screen-Hood |
| 5 | 105-0088-03 | 1 | Bracket-Cable, Hood |
| 6 | 46-8092 | 2 | Screw-Plastite |
| 7 | 65-5100 | 1 | Handle-Door |
| 9 | 105-3650 | 1 | Cable-Hood |
| 10 | 283-58 | 2 | Pin-Clevis |

| Ref. | Part Number | Qty. | Description |
|---|---|---|---|
| 11 | 3290-307 | 2 | Pin-Cotter |
| 12 | 105-3651 | 1 | Strip-Foam |
| 13 | 104-1453 | 1 | Grommet |
| 14 | 3290-412 | 12 | Rivet |
| 15 | 3269-4 | 18 | Rivet-Pop |
| 16 | 3256-51 | 14 | Washer-Flat |
| 17 | 66-6140 | 2 | Decal |
| 18 | 108-2067 | 2 | Decal |
| 19 | 95-6339 | 2 | Latch |

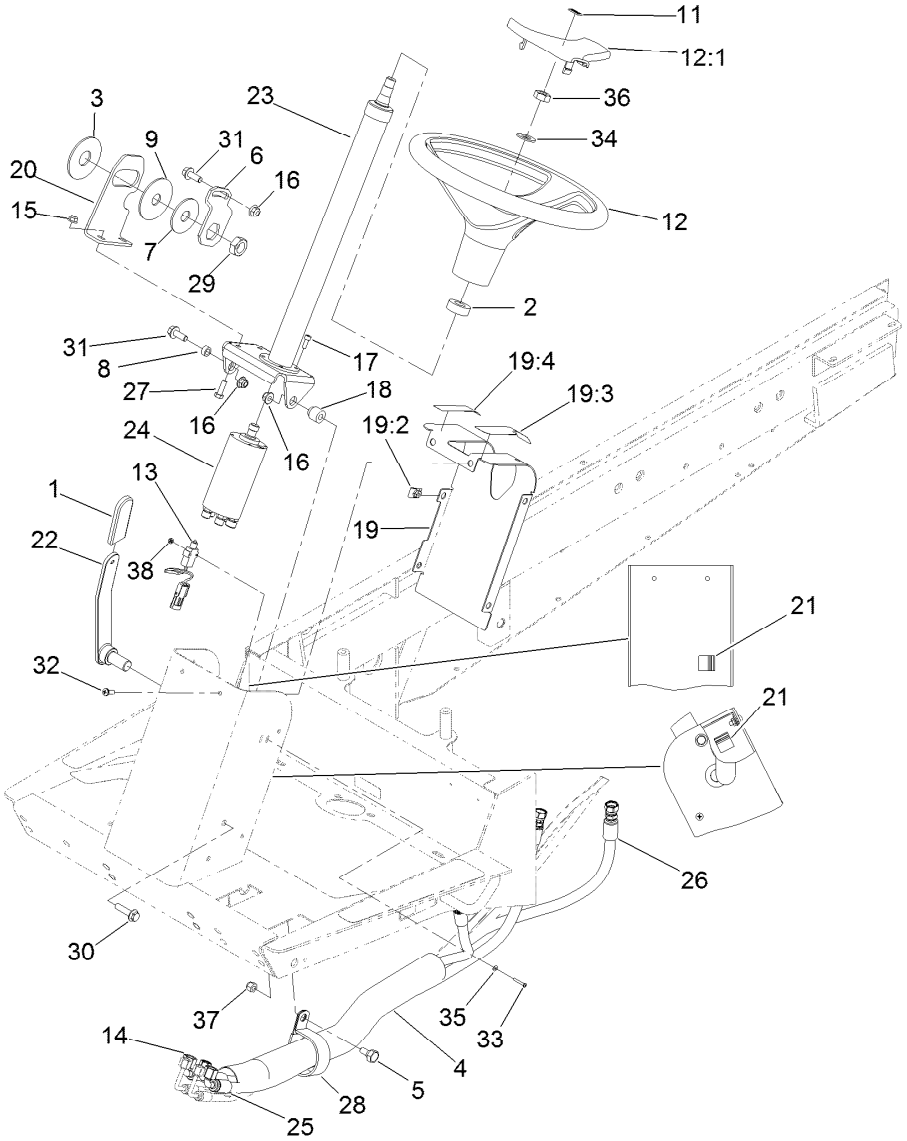


# Steering Assembly

| Ref. | Part Number | Qty. | Description |
|---|---|---|---|
| 1 | 21-1880 | 1 | Grip-Handle |
| 2 | 21-9260 | 1 | Cover-Dust |
| 3 | 31-0390 | 1 | Disc-Friction |
| 4 | 44-8530 | 1 | Protector-Sleeve |
| 5 | 46-3380 | 1 | Bolt-Shoulder |
| 6 | 80-2880 | 1 | Bracket-Tilt |
| 7 | 80-2930 | 1 | Washer-Flat |
| 8 | 80-2960 | 1 | Spacer-Tower |
| 9 | 82-9010 | 1 | Disc-Friction |
| 11 | 98-1459 | 1 | Decal |
| 12 | 98-1471 | 1 | Wheel-Steering |
| 12:1 | 98-1468 | 1 | Cover-Wheel, Steering |
| 13 | 99-3410 | 1 | Switch |
| 14 | 133-6399 | 1 | Hose HYD ASM |
| 15 | 104-8300 | 2 | Nut-Flange, NI |
| 16 | 104-8301 | 3 | Nut-Flange, NI |
| 17 | 105-2409 | 4 | Screw-HSH |
| 18 | 105-7166 | 1 | Spacer |
| 19 | 105-7180 | 1 | Tower Panel ASM |
| 19:2 | 105-7170 | 6 | Nut-Retainer |
| 19:3 | 105-7179 | 1 | Decal-Brake, Parking |

| Ref. | Part Number | Qty. | Description |
|---|---|---|---|
| 19:4 | 82-8940 | 1 | Decal-Steering, Tilt |
| 20 | 105-7181-03 | 1 | Plate-Pivot |
| 21 | 105-7188 | 2 | Clamp-Adhesive |
| 22 | 108-6092 | 1 | Lever-Steering, Tilt |
| 23 | 114-2884 | 1 | Column ASM |
| 24 | 131-5624 | 1 | Steer Valve ASM |
| 25 | 132-7244 | 1 | Hose ASM |
| 26 | 132-7245 | 1 | HYD Hose ASM |
| 27 | 322-5 | 2 | Screw-HH |
| 28 | 2412-102 | 1 | Clamp-R |
| 29 | 3218-7 | 1 | Nut-Jam |
| 30 | 3234-18 | 1 | Screw-HHF |
| 31 | 3234-42 | 2 | Screw-HHF |
| 32 | 3250-32 | 6 | Screw-PPH |
| 33 | 3250-35 | 2 | Screw-PPH |
| 34 | 3256-27 | 1 | Washer-Flat |
| 35 | 3256-53 | 2 | Washer-Flat |
| 36 | 3296-33 | 1 | Nut-Lock, NI |
| 37 | 3296-39 | 1 | Nut-Lock, NI |
| 38 | 32149-6 | 2 | Nut-Keps |

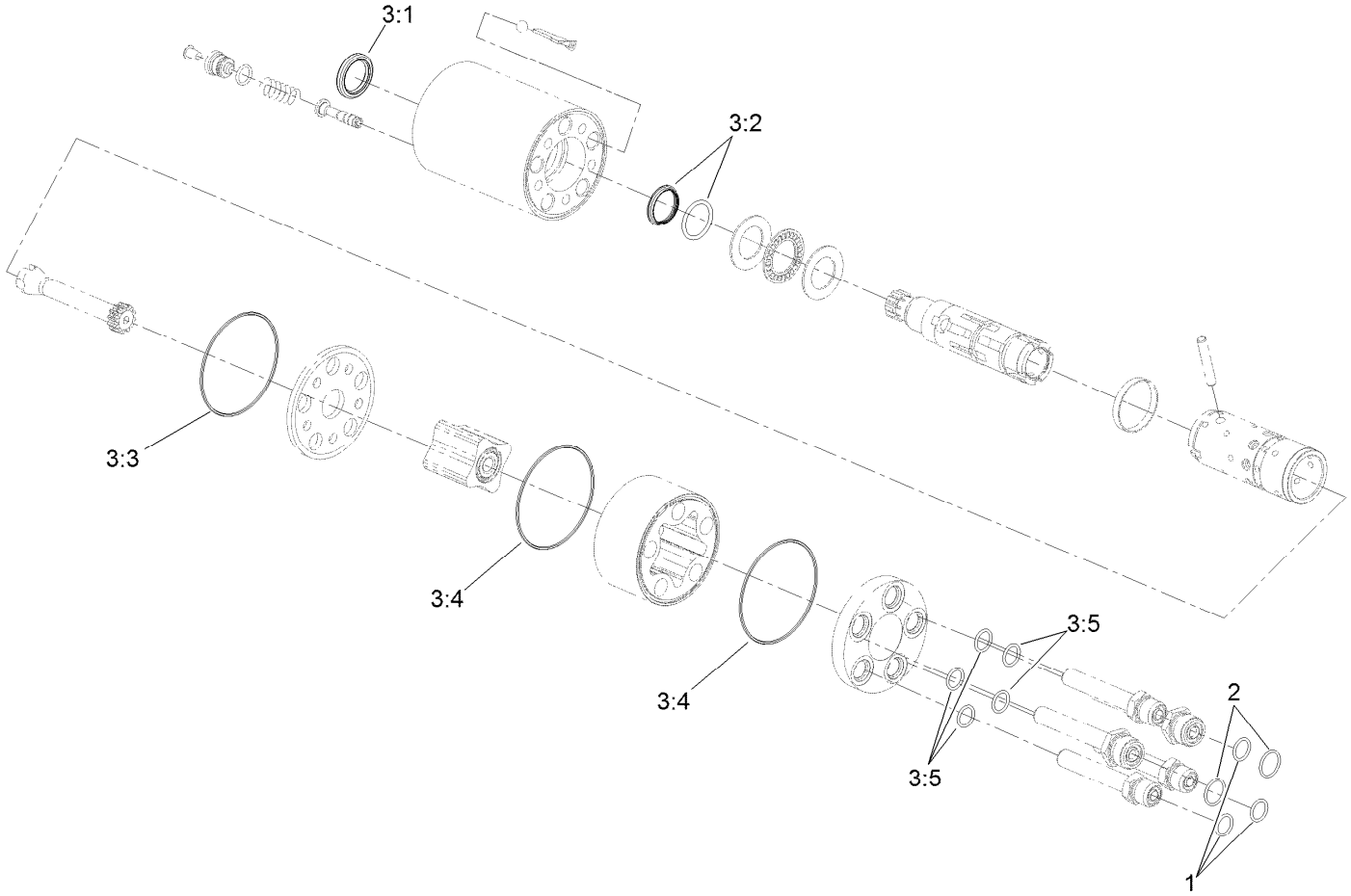


# Steer Valve Assembly No. 131-5624

| *Ref.* | *Part Number* | *Qty.* | *Description* |
|---|---|---|---|
| 1 | 237-21 | 3 | O-Ring |
| 2 | 237-22 | 2 | O-Ring |
| 3 | 106-6716 | 1 | Seal Kit ● |
| 3:1 | | 1 | Ring-Seal, Dust ■ |
| 3:2 | | 1 | Seal-Shaft ■ |
| 3:3 | | 1 | O-Ring ■ |
| 3:4 | | 2 | O-Ring ■ |
| 3:5 | | 5 | O-Ring ■ |

● Not illustrated

■ Not serviced separately

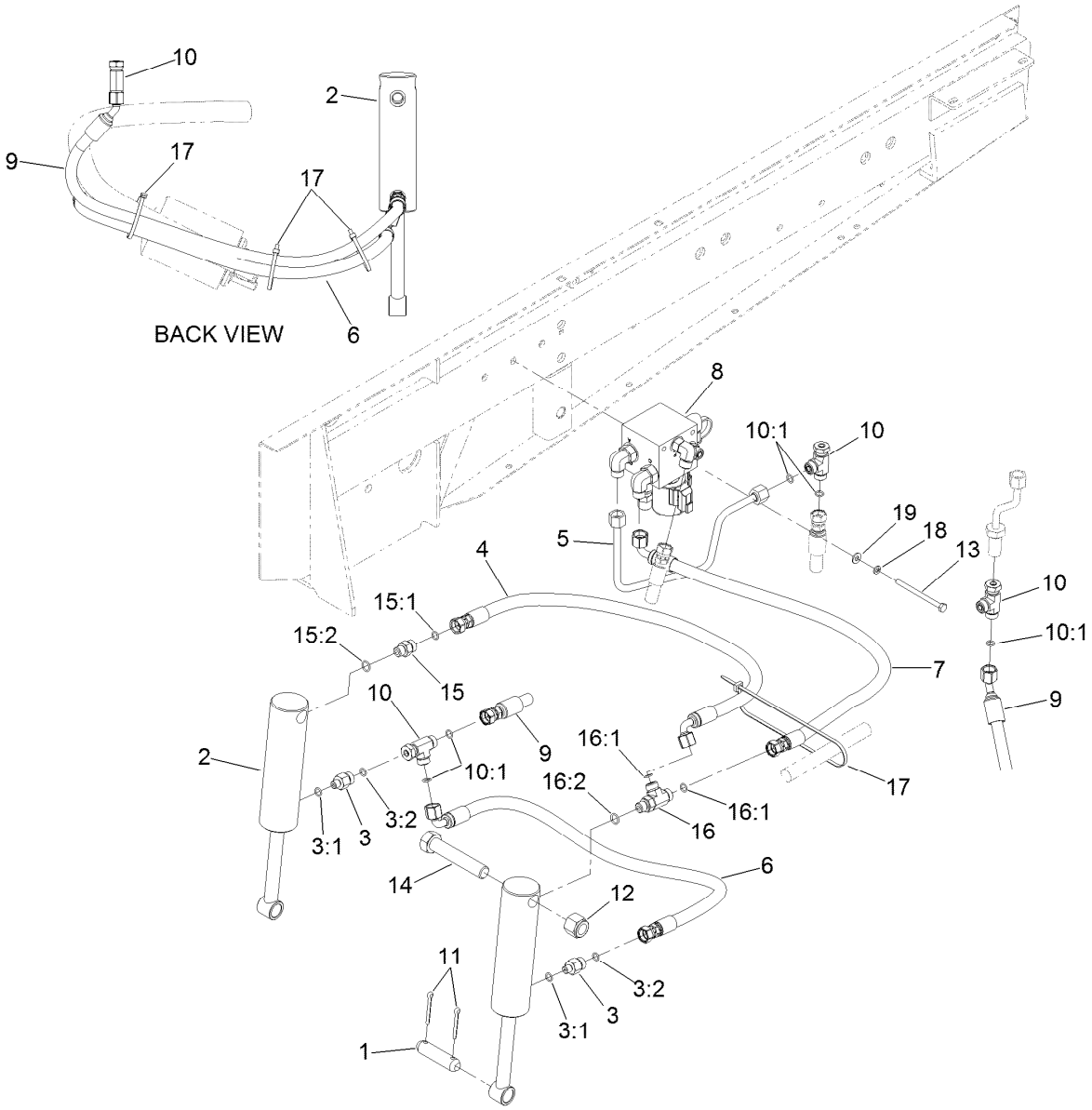


# Hydraulic Assembly

| Ref. | Part Number | Qty. | Description |
|---|---|---|---|
| 1 | 27-4240 | 2 | Pin-Cylinder |
| 2 | 63-6630 | 2 | HYD Cylinder ASM |
| 3 | 340-88 | 2 | Fitting-Str |
| 3:1 | 237-22 | 1 | O-Ring |
| 3:2 | 237-78 | 1 | O-Ring |
| 4 | 95-8828 | 1 | Hose ASM |
| 5 | 133-6366 | 1 | Tube ASM-HYD |
| 6 | 114-5500 | 1 | Hose-Hydraulic |
| 7 | 120-6572 | 1 | Hose-HYD |
| 8 | 132-7243 | 1 | Valve ASM |
| 9 | 133-6353 | 1 | Hose ASM-HYD |
| 10 | 340-115 | 3 | Fitting-Tee, Swivel Nut |
| 10:1 | 237-22 | 2 | O-Ring |

| Ref. | Part Number | Qty. | Description |
|---|---|---|---|
| 11 | 3272-23 | 4 | Pin-Cotter |
| 12 | 3296-51 | 2 | Nut-Lock, NI |
| 13 | 321-19 | 2 | Screw-HH |
| 14 | 328-7 | 2 | Screw-HH |
| 15 | 340-2 | 1 | Fitting-Str |
| 15:1 | 237-22 | 1 | O-Ring |
| 15:2 | 237-42 | 1 | O-Ring |
| 16 | 340-86 | 1 | Fitting-Tee |
| 16:1 | 237-22 | 2 | O-Ring |
| 16:2 | 237-42 | 1 | O-Ring |
| 17 | 3290-379 | 4 | Tie-Cable |
| 18 | 3253-3 | 2 | Washer-Lock |
| 19 | 3256-22 | 2 | Washer-Flat |

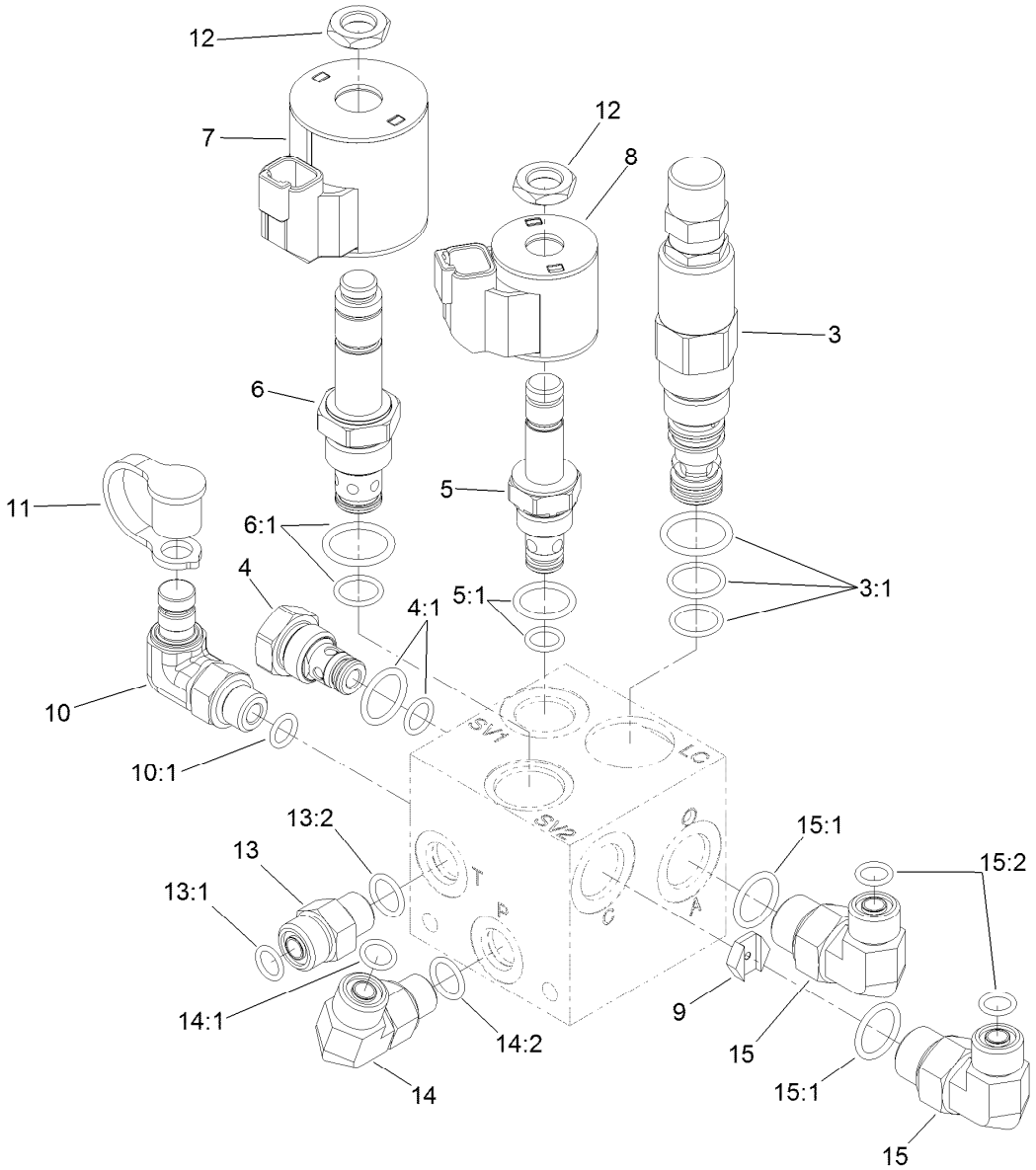


# Valve Assembly No. 132-7243

| Ref. | Part Number | Qty. | Description |
|---|---|---|---|
| 3 | 120-6554 | 1 | Valve-Logic |
| 3:1 | 119-2159 | 1 | Seal Kit |
| 4 | 114-2873 | 1 | Check Valve ASM |
| 4:1 | 105-9156 | 1 | Seal Kit |
| 5 | 120-6562 | 1 | Valve-Solenoid |
| 5:1 | 105-9156 | 1 | Seal Kit |
| 6 | 120-6561 | 1 | Valve-Solenoid |
| 6:1 | 105-9159 | 1 | Seal Kit |
| 7 | 115-3021 | 1 | Coil-12V |
| 8 | 119-8036 | 1 | Coil |
| 9 | 120-6558 | 1 | Orifice-Control, Flow (0.100In) |
| 10 | 115-9147 | 1 | Fitting-Elbow, 90 DEG |

| Ref. | Part Number | Qty. | Description |
|---|---|---|---|
| 10:1 | 237-78 | 1 | O-Ring |
| 11 | 354-79 | 1 | Cap-Dust |
| 12 | 110-2634 | 2 | Nut-Coil |
| 13 | 340-2 | 1 | Fitting-Str |
| 13:1 | 237-22 | 1 | O-Ring |
| 13:2 | 237-42 | 1 | O-Ring |
| 14 | 340-77 | 1 | Fitting-Elbow 90 |
| 14:1 | 237-22 | 1 | O-Ring |
| 14:2 | 237-42 | 1 | O-Ring |
| 15 | 340-18 | 2 | Fitting-HYD, 90 DEG |
| 15:1 | 237-79 | 1 | O-Ring |
| 15:2 | 237-22 | 1 | O-Ring |

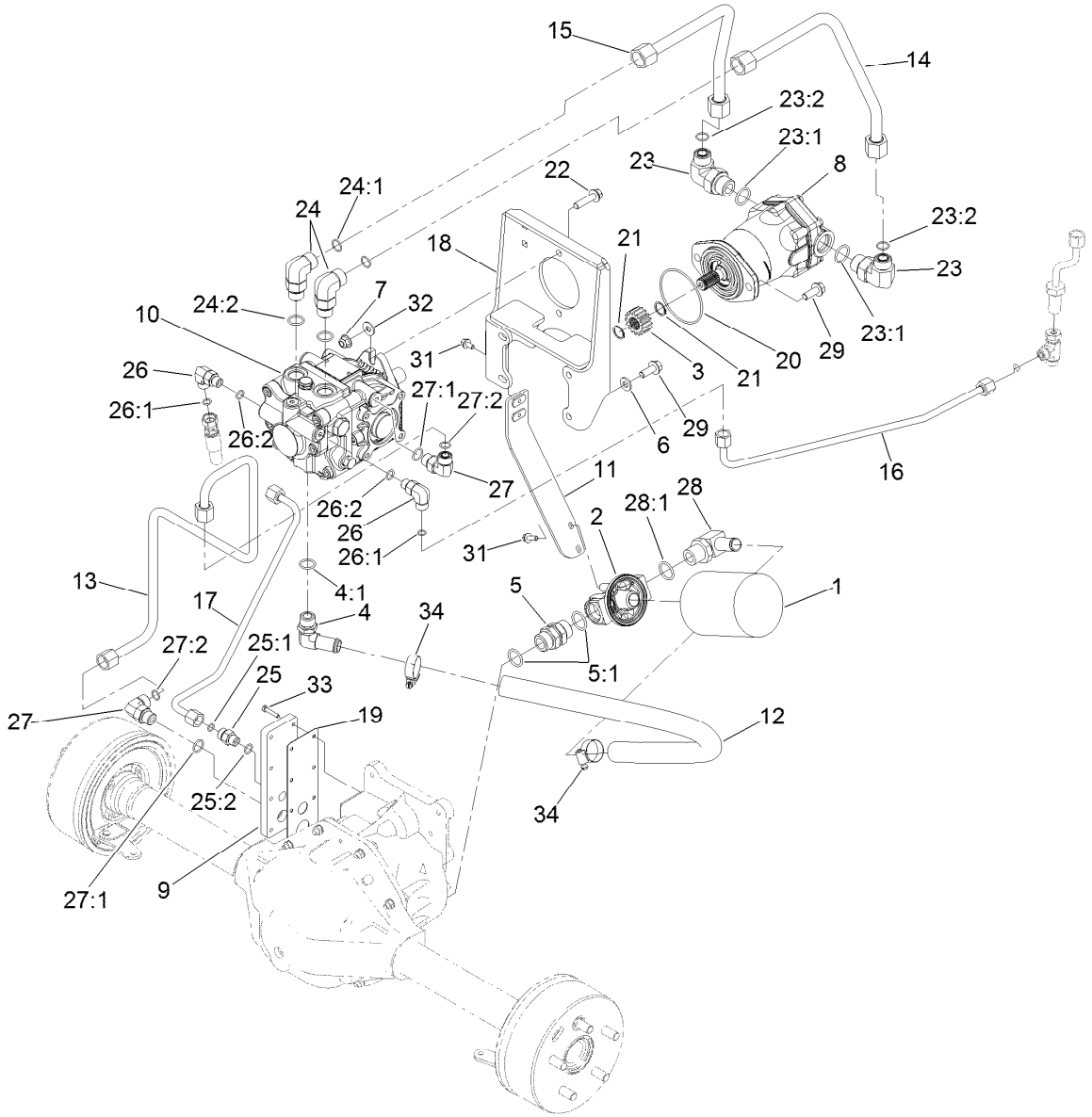


# Transmission Hydraulic Assembly

| Ref. | Part Number | Qty. | Description |
|---|---|---|---|
| 1 | 54-0110 | 1 | Filter-Oil, Transmission |
| 2 | 68-8990 | 1 | Head-Filter |
| 3 | 86-7220 | 1 | Gear-Pinion |
| 4 | 87-8170 | 1 | Fitting |
| 4:1 | 237-80 | 1 | O-Ring |
| 5 | 98-9906 | 1 | Fitting-Thread, Straight |
| 5:1 | 237-81 | 2 | O-Ring |
| 6 | 100-4852 | 1 | Washer-Hardened |
| 7 | 104-8301 | 2 | Nut-Flange, NI |
| 8 | 130-8724 | 1 | Motor-Hydraulic |
| 9 | 130-8755 | 1 | Plate-Axle |
| 10 | 133-6385 | 1 | Pump-Hydraulic |
| 11 | 132-7227-03 | 1 | Bracket-Filter |
| 12 | 132-7242 | 1 | Hose-Suction |
| 13 | 132-7250 | 1 | Tube ASM |
| 14 | 132-7251 | 1 | Tube ASM |
| 15 | 132-7252 | 1 | Tube ASM |
| 16 | 133-6352 | 1 | Tube ASM |
| 17 | 133-6351 | 1 | Tube ASM |
| 18 | 132-7276-03 | 1 | Bracket-Pump |
| 19 | 132-7277 | 1 | Gasket-Plate, Axle |

| Ref. | Part Number | Qty. | Description |
|---|---|---|---|
| 20 | 237-161 | 1 | O-Ring |
| 21 | 32120-72 | 2 | Ring-Snap |
| 22 | 114-4681 | 2 | Screw-HHF |
| 23 | 340-139 | 2 | Fitting-Elbow 90 |
| 23:1 | 237-81 | 1 | O-Ring |
| 23:2 | 237-65 | 1 | O-Ring |
| 24 | 340-17 | 2 | Fitting-Elbow 90 |
| 24:1 | 237-65 | 1 | O-Ring |
| 24:2 | 237-80 | 1 | O-Ring |
| 25 | 340-2 | 1 | Fitting-Str |
| 25:1 | 237-22 | 1 | O-Ring |
| 25:2 | 237-42 | 1 | O-Ring |
| 26 | 340-77 | 2 | Fitting-Elbow 90 |
| 26:1 | 237-22 | 1 | O-Ring |
| 26:2 | 237-42 | 1 | O-Ring |
| 27 | 340-98 | 2 | Fitting-HYD, 90 DEG |
| 27:1 | 237-79 | 1 | O-Ring |
| 27:2 | 237-30 | 1 | O-Ring |
| 28 | 353-987 | 1 | Fitting-HYD, 90 DEG (Barbed) |
| 28:1 | 237-81 | 1 | O-Ring |

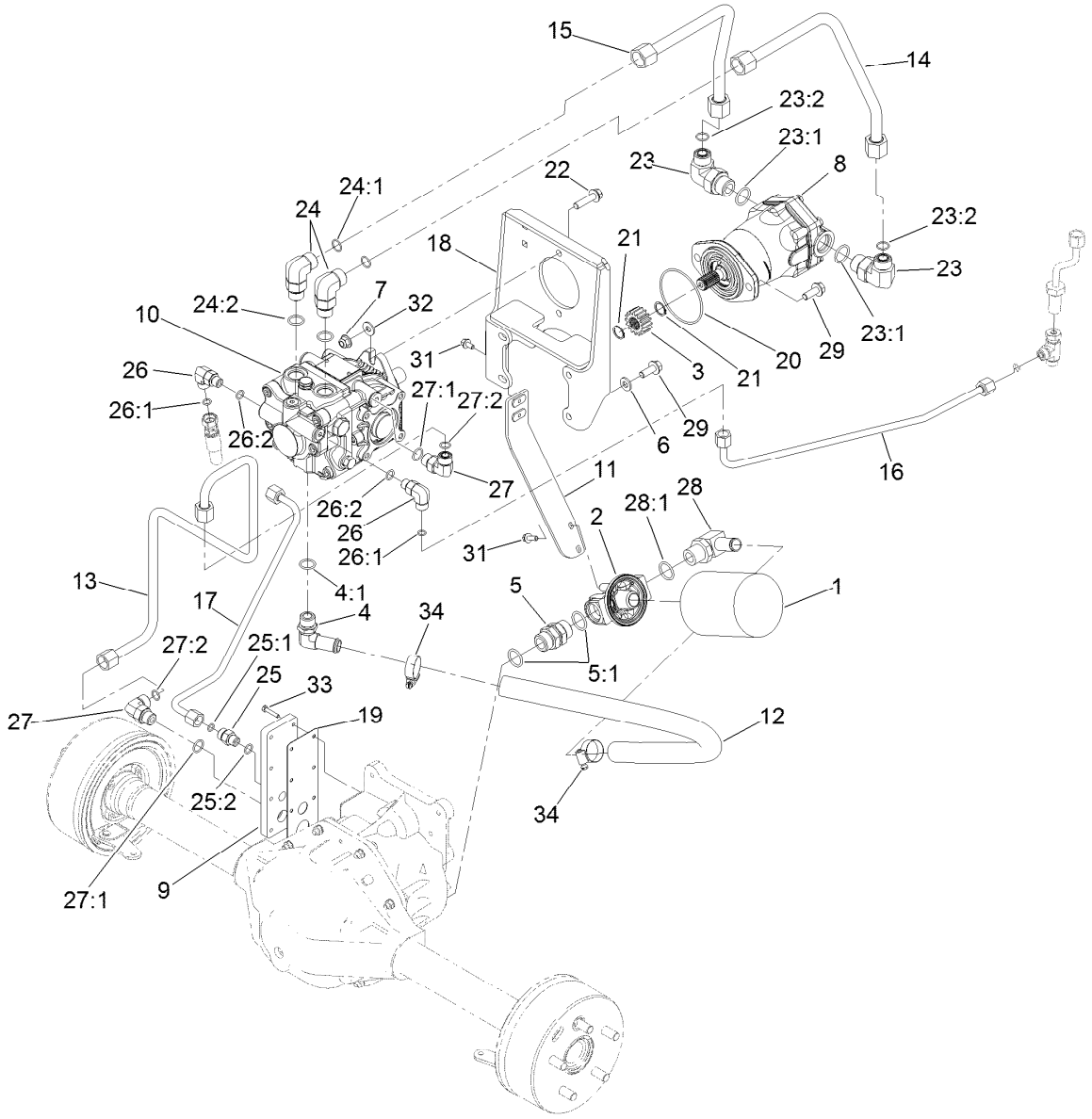


# Transmission Hydraulic Assembly (continued)

| Ref. | Part Number | Qty. | Description |
|---|---|---|---|
| 29 | 3234-42 | 6 | Screw-HHF |
| 31 | 3234-4 | 4 | Screw-HHF |
| 32 | 3256-3 | 2 | Washer-Flat |

| Ref. | Part Number | Qty. | Description |
|---|---|---|---|
| 33 | 117-1701 | 8 | Screw-HWHTF |
| 34 | 2412-129 | 2 | Clamp-Hose |

# Hydraulic Pump Assembly No. 133-6385

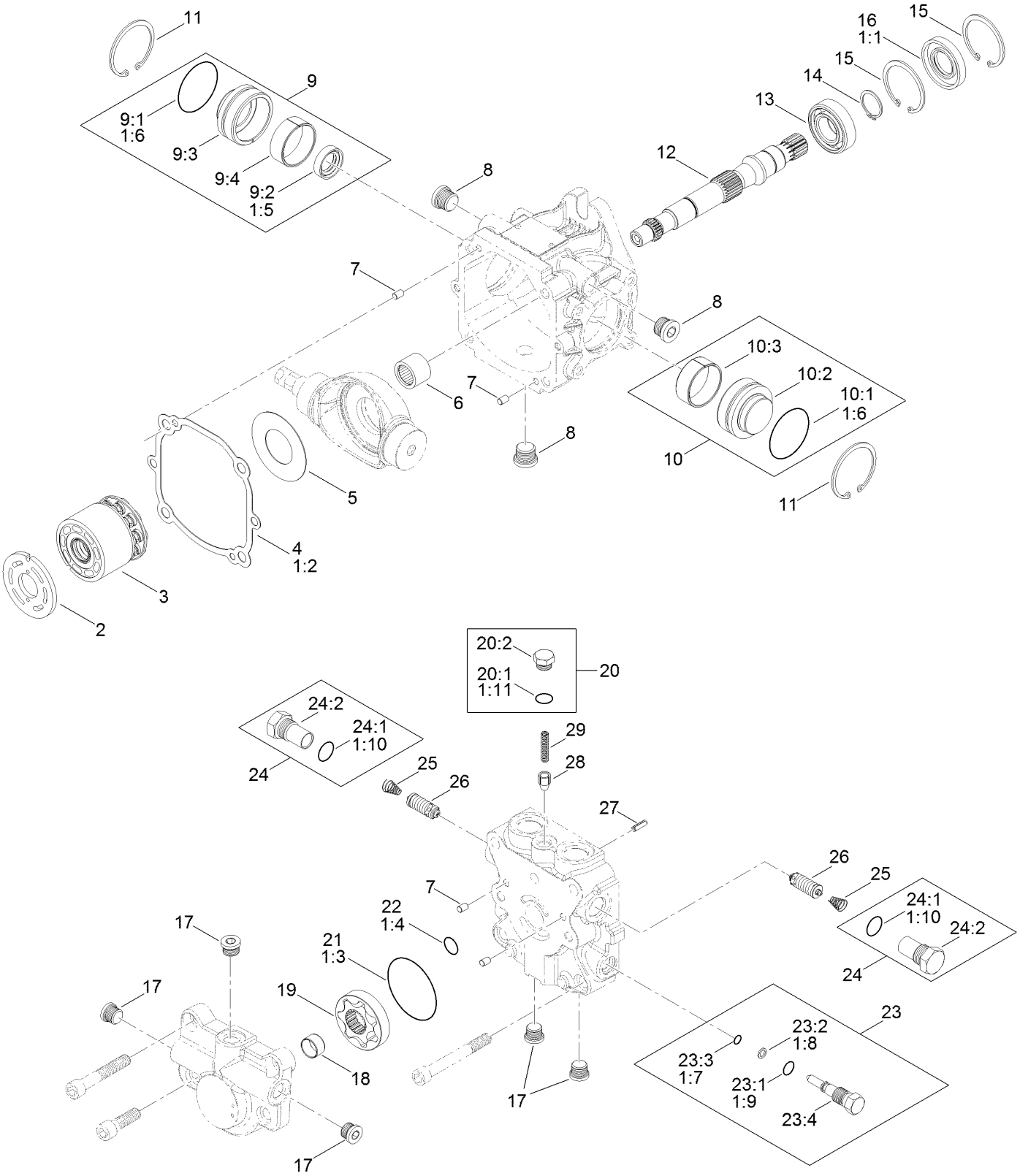


1 = Items Included in Seal Overhaul Kit

# Hydraulic Pump Assembly No. 133-6385 (continued)

| Ref. | Part Number | Qty. | Description |
|---|---|---|---|
| 1 | 136-1010 | 1 | Seal Overhaul Kit |
| 1:1 | 136-1021 | 1 | Seal-Lip, Shaft |
| 1:2 | 136-1023 | 1 | Gasket-Cap, End |
| 1:3 | 136-1031 | 1 | O-Ring |
| 1:4 | 136-1032 | 1 | O-Ring |
| 1:5 | | 1 | Seal-Lip, Journal Bearing ● |
| 1:6 | | 2 | O-Ring, Journal Bearing ● |
| 1:7 | | 1 | O Ring-Valve, Bypass ● |
| 1:8 | | 1 | Ring-Back Up ● |
| 1:9 | | 1 | O Ring-Valve, Bypass ● |
| 1:10 | | 2 | O Ring-Plug ● |
| 1:11 | | 1 | O Ring-Plug ● |
| 2 | 136-1012 | 1 | Plate-Valve, CCW |
| 3 | 136-1011 | 1 | Cylinder Block Kit |
| 4 | 136-1023 | 1 | Gasket-Cap, End |
| 5 | 136-1013 | 1 | Plate-Thrust |
| 6 | 136-1022 | 1 | Bearing-Needle |
| 7 | 136-1024 | 4 | Pin |
| 8 | 74-9450 | 3 | Plug |
| 9 | 136-1014 | 1 | Journal Bearing Carrier ASM |
| 9:1 | | 1 | O-Ring ● |
| 9:2 | | 1 | Seal-Lip ● |
| 9:3 | | 1 | Body ● |
| 9:4 | | 1 | Race-Inner ● |
| 10 | 136-1015 | 1 | Journal Bearing Carrier ASM |
| 10:1 | | 1 | O-Ring ● |
| 10:2 | | 1 | Body ● |
| 10:3 | | 1 | Race-Inner ● |
| 11 | 136-1020 | 2 | Ring-Retaining |
| 12 | 136-1016 | 1 | Shaft-Drive |
| 13 | 136-1017 | 1 | Bearing-Ball |
| 14 | 136-1018 | 1 | Ring-Retaining |
| 15 | 136-1019 | 2 | Ring-Retaining |
| 16 | 136-1021 | 1 | Seal-Lip, Shaft |
| 17 | 136-1027 | 5 | Plug ASM |
| 18 | 136-1030 | 1 | Bearing-Journal |
| 19 | 136-1029 | 1 | Gerotor ASM |
| 20 | 136-1028 | 1 | Plug ASM |
| 20:1 | | 1 | O-Ring ● |
| 20:2 | | 1 | Plug ● |
| 21 | 136-1031 | 1 | O-Ring |
| 22 | 136-1032 | 1 | O-Ring |
| 23 | 136-1037 | 1 | Bypass Valve ASM |
| 23:1 | | 1 | O-Ring ● |
| 23:2 | | 1 | Back Up Ring ● |
| 23:3 | | 1 | O-Ring ● |
| 23:4 | | 1 | Plug ● |
| 24 | 136-1025 | 2 | Plug ASM |
| 24:1 | | 1 | O-Ring ● |
| 24:2 | | 1 | Plug ● |
| 25 | 136-1035 | 2 | Spring |
| 26 | 136-1036 | 2 | Valve-Scr |
| 27 | 131-3800 | 1 | Pin-Slotted |
| 28 | 136-1033 | 1 | Cone-Valve, Relief |
| 29 | 136-1034 | 1 | Spring |

● Not serviced separately

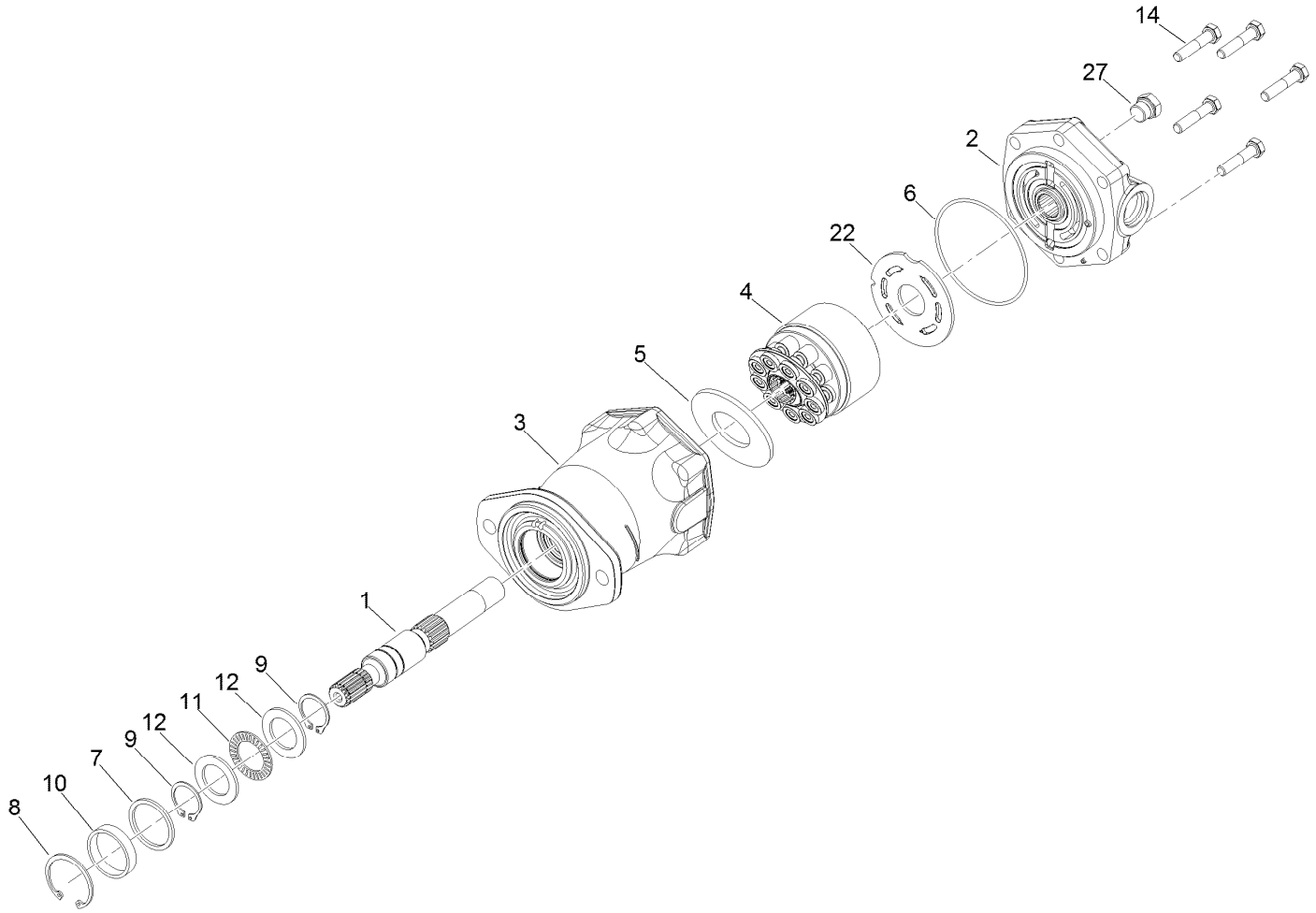


# Hydraulic Motor Assembly No. 130-8724

| *Ref.* | *Part Number* | *Qty.* | *Description* |
|---|---|---|---|
| 1 | 136-1038 | 1 | Shaft-Drive, Splined |
| 2 | | 1 | Backplate ASM ● |
| 3 | | 1 | Housing ASM ● |
| 4 | 136-1039 | 1 | Rotating Kit ASM |
| 5 | 136-1040 | 1 | Insert-Camplate |
| 6 | 136-1041 | 1 | O-Ring |
| 7 | 136-1042 | 1 | Washer |
| 8 | 136-1043 | 1 | Ring-Retaining |
| 9 | 136-1044 | 2 | Ring-Retaining |
| 10 | 136-1045 | 1 | Spacer |
| 11 | 136-1046 | 1 | Bearing-Thrust |
| 12 | 136-1047 | 2 | Race-Bearing |
| 14 | | 1 | Screw-Cap ● |
| 22 | 136-1048 | 1 | Plate-Valve |
| 27 | 136-1049 | 1 | Plug ASM |

● Not serviced separately

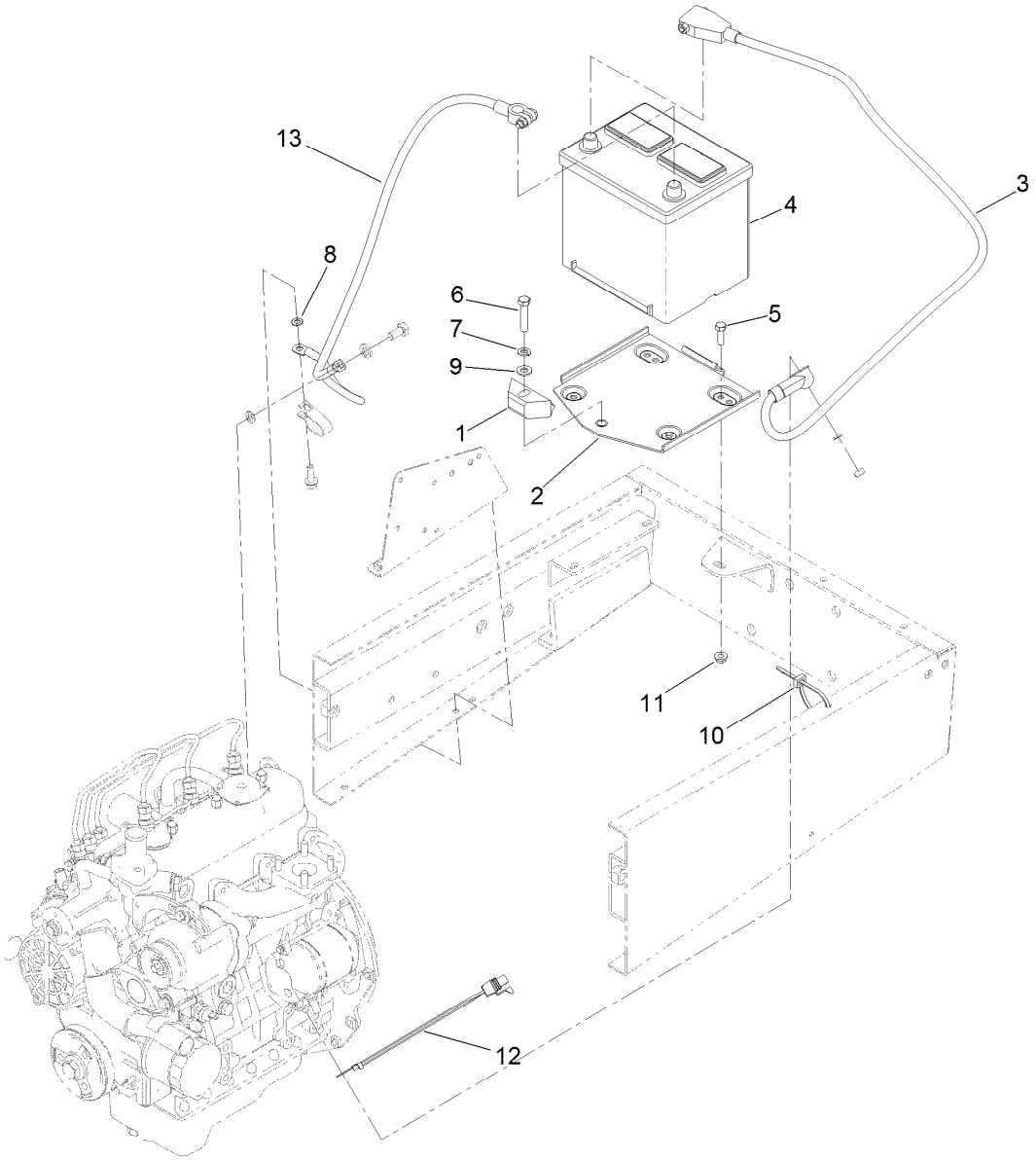


# Battery Assembly

| Ref. | Part Number | Qty. | Description |
|---|---|---|---|
| 1 | 66-2490 | 1 | Retainer-Battery |
| 2 | 94-7343 | 1 | Base-Battery |
| 3 | 104-0086 | 1 | Cable-Battery, Positive |
| 4 | 106-5187 | 1 | Battery-Dry |
| 5 | 322-5 | 3 | Screw-HH |
| 6 | 323-9 | 1 | Screw-HH |
| 7 | 3253-21 | 1 | Washer-Lock |
| 8 | 3255-8 | 1 | Washer-Lock |
| 9 | 3256-24 | 1 | Washer-Flat |
| 10 | 3290-378 | 8 | Tie-Cable |
| 11 | 32128-20 | 3 | Nut-HF |
| 12 | 99-3441 | 1 | Harness-Wire, Fusible Link |
| 13 | 105-0040 | 1 | Cable-Battery, Negative |

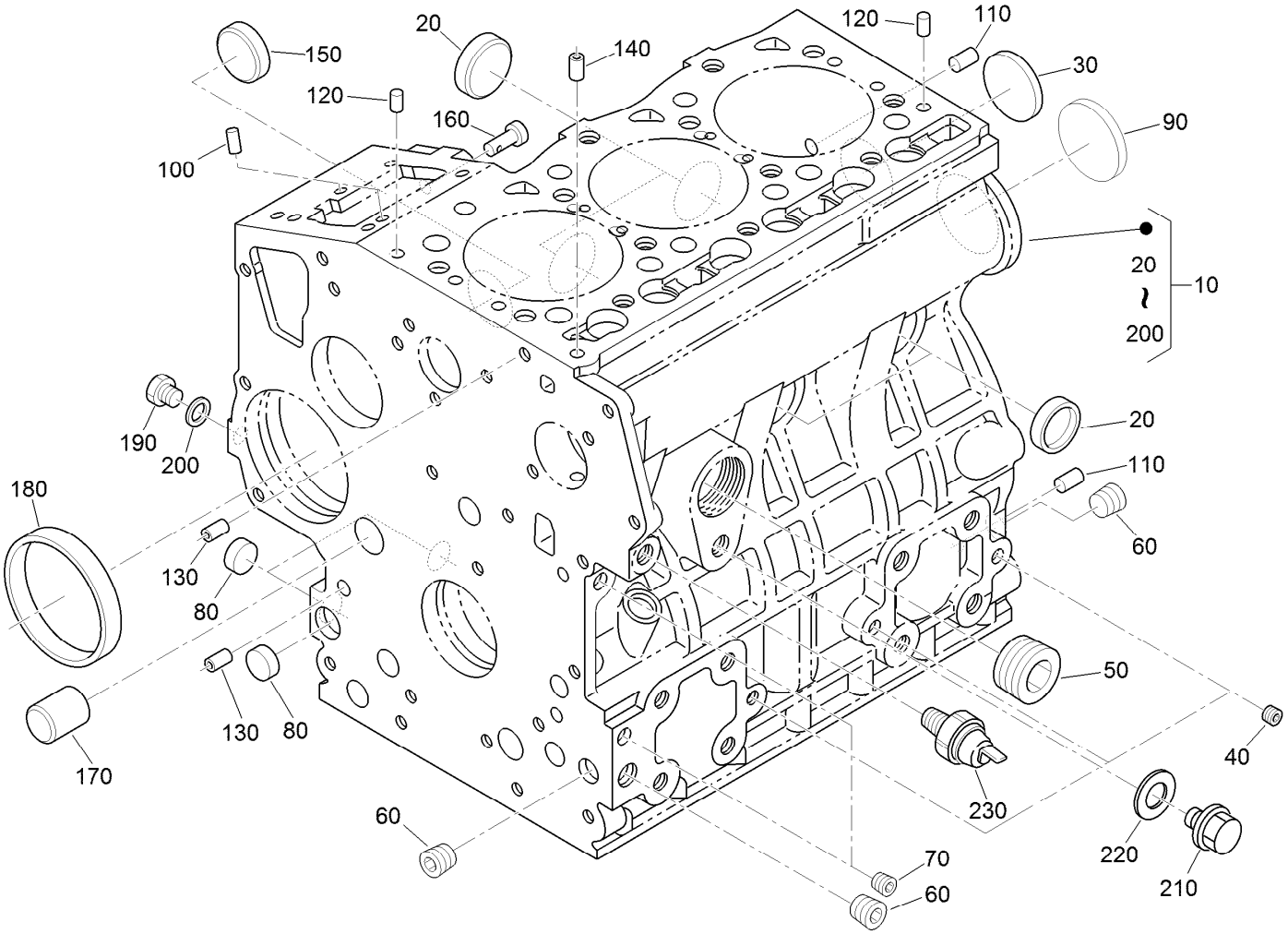


# Crankcase Assembly

| Ref. | Part Number | Qty. | Description |
|---|---|---|---|
| 10 | 115-3443 | 1 | Crankcase ASM |
| 20 | 98-9398 | 4 | Cap-Sealing |
| 30 | 98-7539 | 1 | Cap-Sealing |
| 40 | 98-9687 | 3 | Plug |
| 50 | 105-3779 | 1 | Plug |
| 60 | 98-9597 | 3 | Plug |
| 70 | 98-7487 | 2 | Plug |
| 80 | 98-9379 | 3 | Plug-Expansion |
| 90 | 98-9668 | 1 | Plug-Expansion |
| 100 | 98-9375 | 2 | Pin-Straight |
| 110 | 98-9377 | 2 | Pin-Straight |
| 120 | 98-9376 | 2 | Pin-Straight |

| Ref. | Part Number | Qty. | Description |
|---|---|---|---|
| 130 | 98-9387 | 2 | Pin-Pipe |
| 140 | 98-9539 | 1 | Pin-Pipe |
| 150 | 98-9599 | 1 | Plug |
| 160 | 98-9630 | 1 | Pin-Spring, Start |
| 170 | 98-9675 | 1 | Plug |
| 180 | 98-9656 | 1 | Bushing-Governor, Gear |
| 190 | 120-2559 | 1 | Plug |
| 200 | 98-7428 | 1 | Gasket |
| 210 | 99-3447 | 1 | Plug |
| 220 | 106-7056 | 1 | Gasket |
| 230 | 98-9416 | 1 | Switch-Oil |

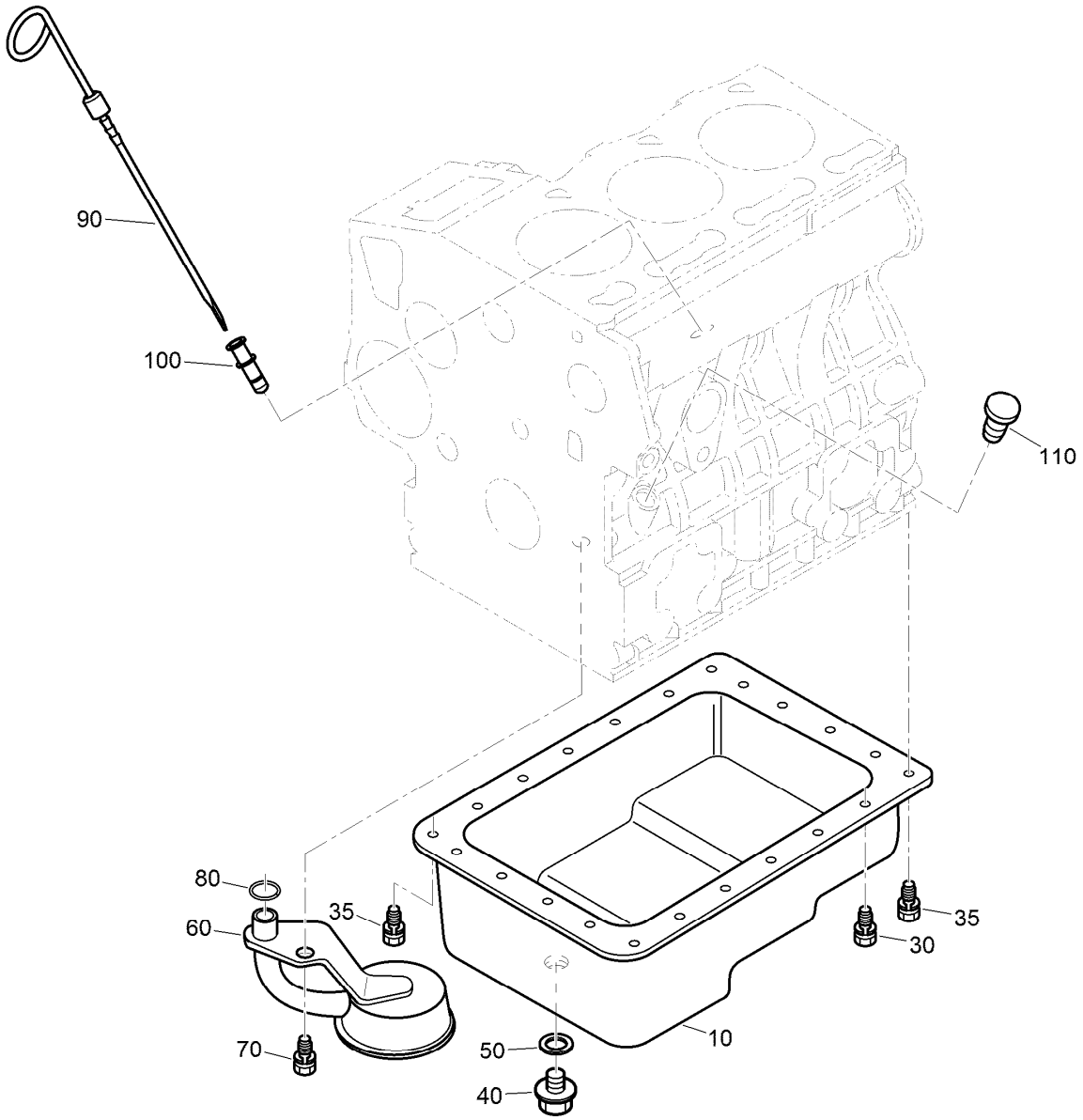


# Oil Pan and Dipstick Assembly

| *Ref.* | *Part Number* | *Qty.* | *Description* |
|---|---|---|---|
| 10 | 104-3495 | 1 | PAN-Oil |
| 30 | 98-9351 | 20 | Bolt |
| 35 | 98-9351 | 2 | Bolt |
| 40 | 114-8151 | 1 | Plug-Drain |
| 50 | 98-7524 | 1 | Gasket |
| 60 | 130-1292 | 1 | Filter-Oil |
| 70 | 98-7526 | 1 | Bolt |
| 80 | 105-3776 | 1 | O-Ring |
| 90 | 104-9348 | 1 | Gauge-Oil |
| 100 | 105-4580 | 1 | Guide-Gauge, Oil |
| 110 | 110-3720 | 1 | Plug-Gauge, Oil |

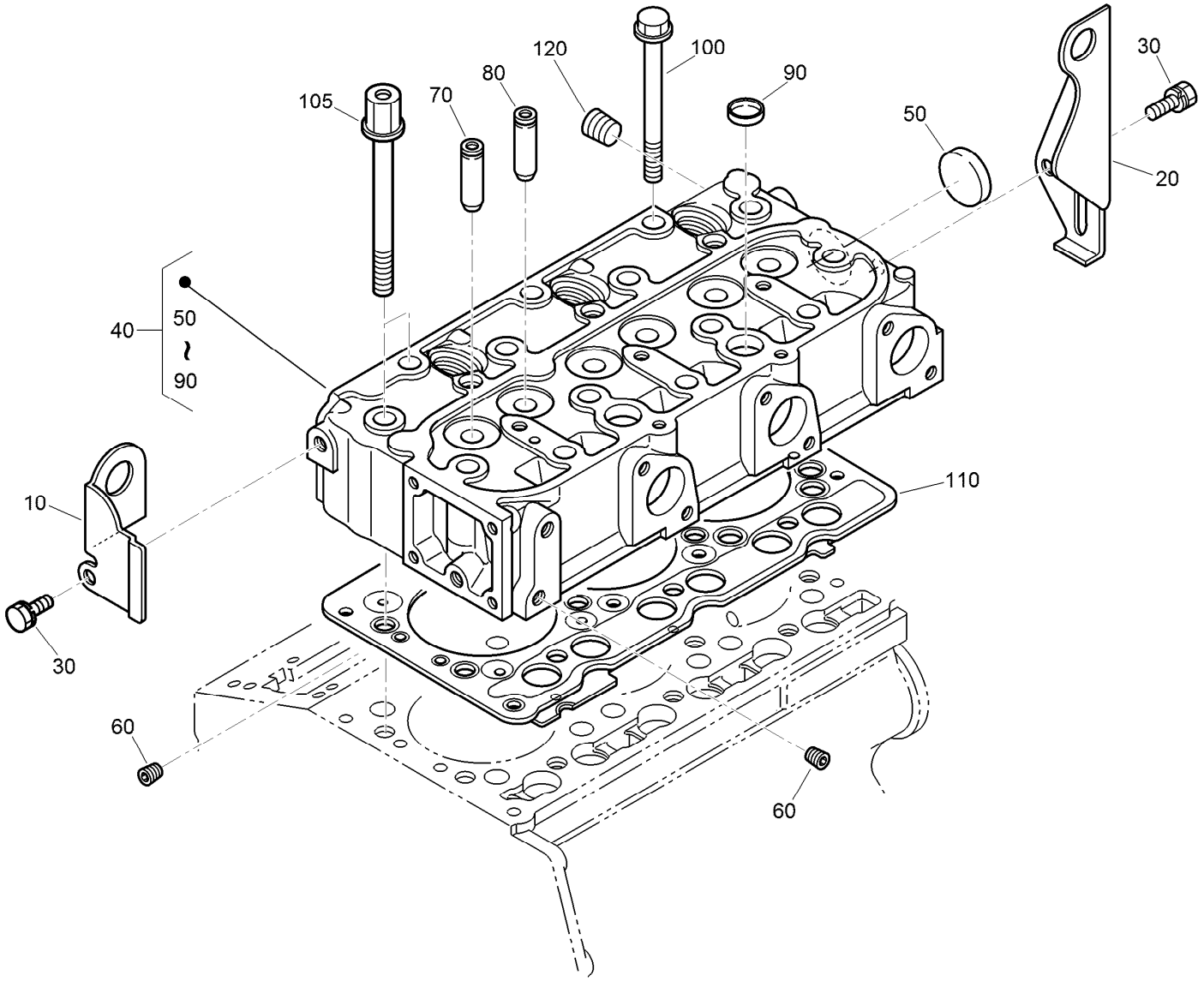


# Cylinder Head Assembly

| Ref. | Part Number | Qty. | Description |
|---|---|---|---|
| 10 | 130-1231 | 1 | Hook-Engine |
| 20 | 98-9478 | 1 | Hook-Engine |
| 30 | 100-9195 | 2 | Bolt |
| 40 | 130-1544 | 1 | Cylinder Head ASM |
| 50 | 105-3705 | 1 | Cap-Sealing |
| 60 | 98-9687 | 2 | Plug |
| 70 | 107-9066 | 3 | Guide-Valve, Inlet |
| 80 | 107-9067 | 3 | Guide-Valve, Exhaust |
| 90 | 98-9389 | 2 | Cap-Sealing |
| 100 | 98-9479 | 12 | Bolt-Head, Cylinder |
| 105 | 98-9647 | 2 | Bolt-Head, Cylinder |
| 110 | 108-6573 | 1 | Gasket-Head, Cylinder |
| 120 | 98-9444 | 1 | Plug |

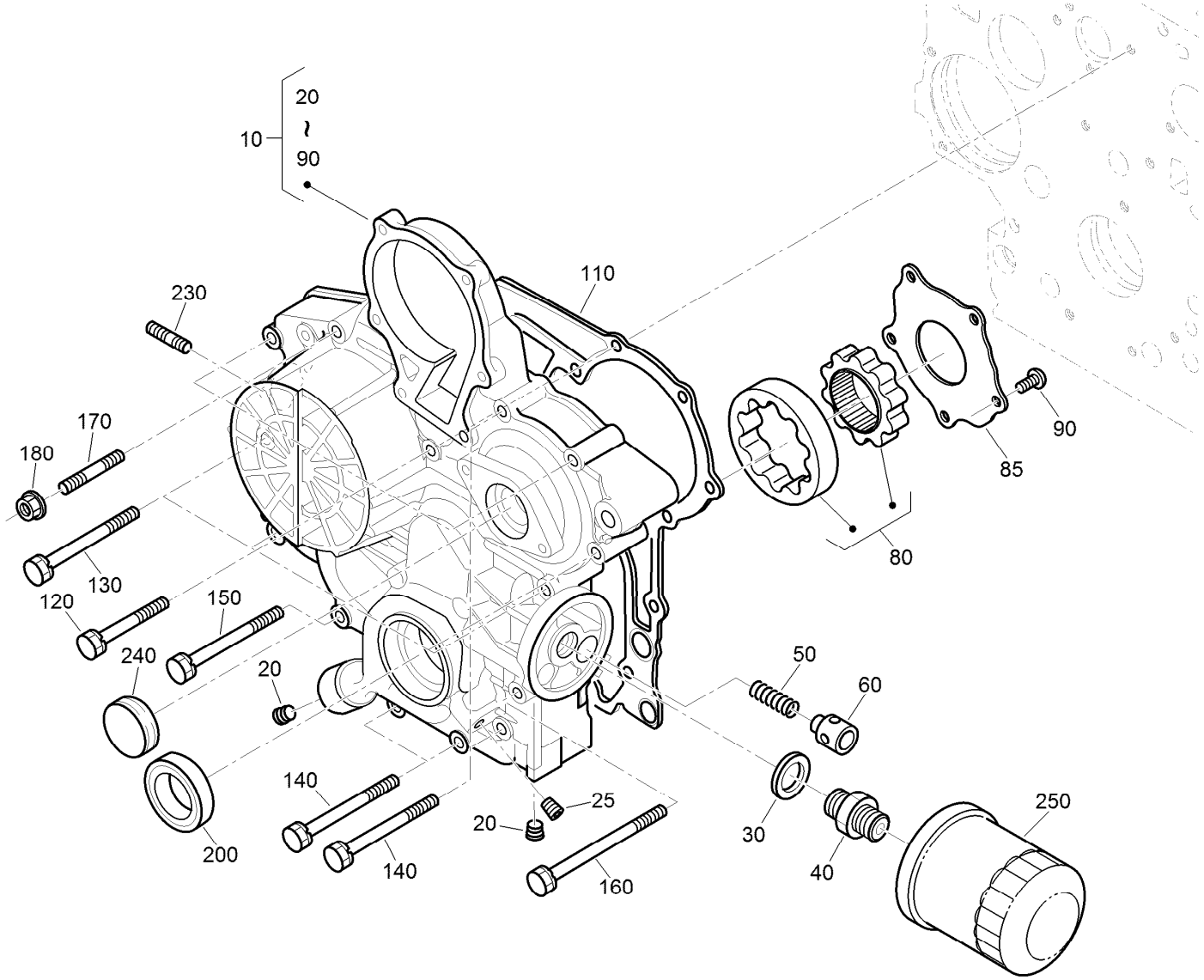


# Gear Case and Oil Filter Cartridge Assembly

| Ref. | Part Number | Qty. | Description |
|---|---|---|---|
| 10 | 115-4105 | 1 | Gear Case ASM |
| 20 | 127-0425 | 2 | Plug |
| 25 | 98-7487 | 1 | Plug |
| 30 | 98-7562 | 1 | Washer-Plain |
| 40 | 98-9388 | 1 | Joint-Pipe |
| 50 | 130-1511 | 1 | Spring |
| 60 | 130-1510 | 1 | Valve-Relief |
| 80 | 130-1508 | 1 | Rotor ASM |
| 85 | 130-1509 | 1 | Cover-Pump, Oil |
| 90 | 130-1164 | 5 | Screw-Binding |
| 110 | 98-9633 | 1 | Gasket-Case, Gear |

| Ref. | Part Number | Qty. | Description |
|---|---|---|---|
| 120 | 100-1765 | 3 | Bolt |
| 130 | 125-9063 | 4 | Bolt-Sems |
| 140 | 98-9356 | 4 | Bolt |
| 150 | 107-9074 | 1 | Bolt |
| 160 | 98-9586 | 1 | Bolt |
| 170 | 105-3709 | 1 | Stud |
| 180 | 100-2203 | 1 | Nut-Flange |
| 200 | 119-8038 | 1 | Seal-Oil |
| 230 | 105-3710 | 2 | Stud |
| 240 | 99-3515 | 1 | Plug-Gearcase |
| 250 | 127-0511 | 1 | Filter-Oil |

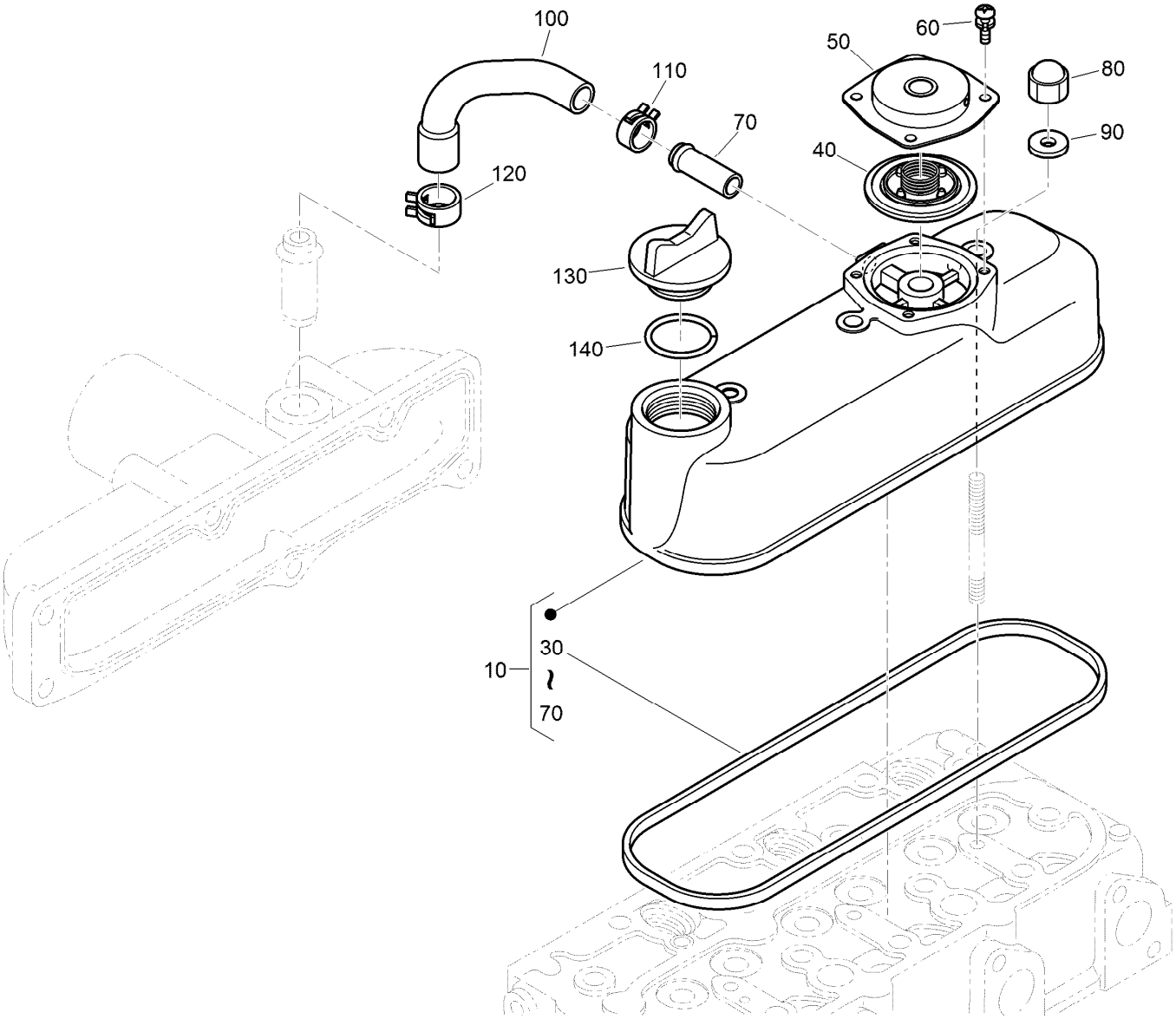


# Cylinder Head Cover Assembly

| Ref. | Part Number | Qty. | Description |
|---|---|---|---|
| 10 | 130-1372 | 1 | Cylinder Head Cover ASM |
| 30 | 98-9615 | 1 | Gasket-Cover, Head |
| 40 | 110-3715 | 1 | Valve-Breather |
| 50 | 110-3714 | 1 | Cover-Breather |
| 60 | 98-9364 | 4 | Screw (With Washer) |
| 70 | 98-7766 | 1 | Pipe-Return, Water |
| 80 | 98-9455 | 3 | Nut-Cap |
| 90 | 98-9454 | 3 | Gasket |
| 100 | 108-2858 | 1 | Tube-Breather |
| 110 | 108-2859 | 1 | Clamp-Hose |
| 120 | 108-2860 | 1 | Clamp-Hose |
| 130 | 107-9075 | 1 | Plug-Filler, Oil |
| 140 | 99-3446 | 1 | O-Ring |

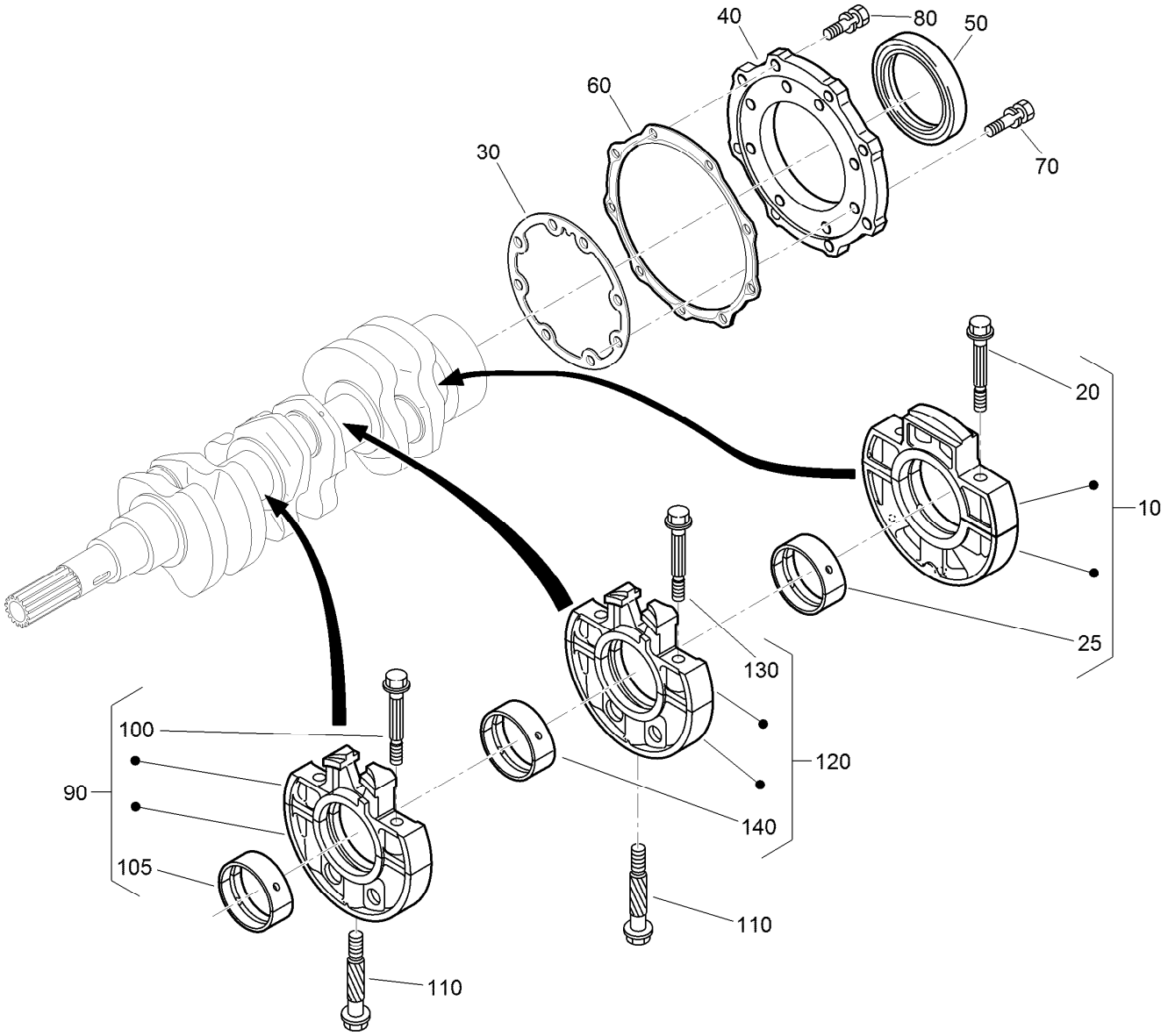


# Main Bearing Case Assembly

| Ref. | Part Number | Qty. | Description |
|---|---|---|---|
| 10 | 112-7026 | 1 | Wheel Bearing Case ASM |
| 20 | 98-9484 | 2 | Bolt-Case, Bearing |
| 25 | 115-4121 | 1 | Metal-Crankshaft (STD) |
| 25 | 112-7039 | 1 | Metal-Crankshaft (0.2Mm) |
| 25 | 112-7040 | 1 | Metal-Crankshaft (-0.4Mm) |
| 30 | 127-0440 | 1 | Gasket-Case, Bearing |
| 40 | 112-7046 | 1 | Cover-Case, Bearing |
| 50 | 112-0180 | 1 | Seal-Oil |
| 60 | 112-7037 | 1 | Gasket-Cover, Case |
| 70 | 127-0441 | 8 | Bolt |
| 80 | 127-0442 | 9 | Bolt |

| Ref. | Part Number | Qty. | Description |
|---|---|---|---|
| 90 | 115-4106 | 1 | Main Bearing Case ASM |
| 100 | 98-9484 | 2 | Bolt-Case, Bearing |
| 105 | 98-9524 | 1 | Metal-Crankshaft (STD Set) |
| 105 | 127-0433 | 1 | Metal-Crankshaft (-0.2Mm) |
| 105 | 98-9531 | 1 | Bearing-Main (0.4Mm) |
| 110 | 98-9485 | 2 | Bolt-Case, Bearing |
| 120 | 115-4107 | 1 | Main Bearing Case ASM |
| 130 | 98-9484 | 2 | Bolt-Case, Bearing |
| 140 | 98-9524 | 1 | Metal-Crankshaft (STD Set) |
| 140 | 127-0433 | 1 | Metal-Crankshaft (-0.2Mm) |
| 140 | 98-9531 | 1 | Bearing-Main (0.4Mm) |

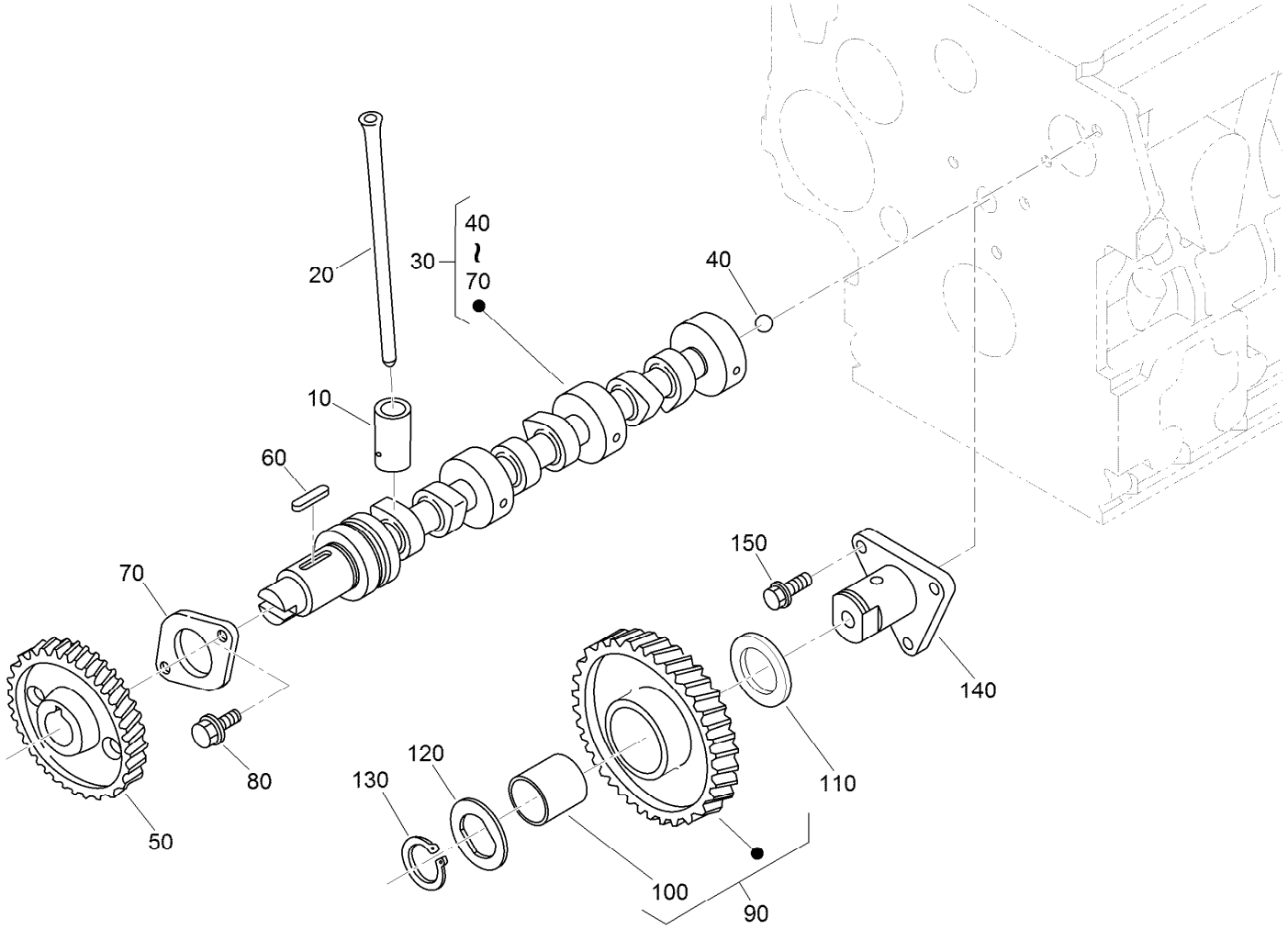


# Camshaft and Idle Gear Shaft Assembly

| *Ref.* | *Part Number* | *Qty.* | *Description* |
|---|---|---|---|
| 10 | 112-0185 | 6 | Tappet |
| 20 | 127-0421 | 6 | Rod-Push |
| 30 | 130-1545 | 1 | Camshaft ASM |
| 40 | 110-3729 | 1 | Ball |
| 50 | 98-9512 | 1 | Gear-Cam |
| 60 | 98-9378 | 1 | Key-Feather |
| 70 | 98-9510 | 1 | Stopper-Camshaft |
| 80 | 98-7692 | 2 | Bolt |
| 90 | 117-7584 | 1 | Idler Gear ASM |
| 100 | 117-7585 | 1 | Bushing-Gear, Idle |
| 110 | 98-9535 | 1 | Collar-Gear, Idle |
| 120 | 98-9536 | 1 | Collar-Gear, Idle |
| 130 | 98-9534 | 1 | Circlip-Gear, Idle |
| 140 | 98-9533 | 1 | Shaft-Gear, Idle |
| 150 | 98-7692 | 3 | Bolt |

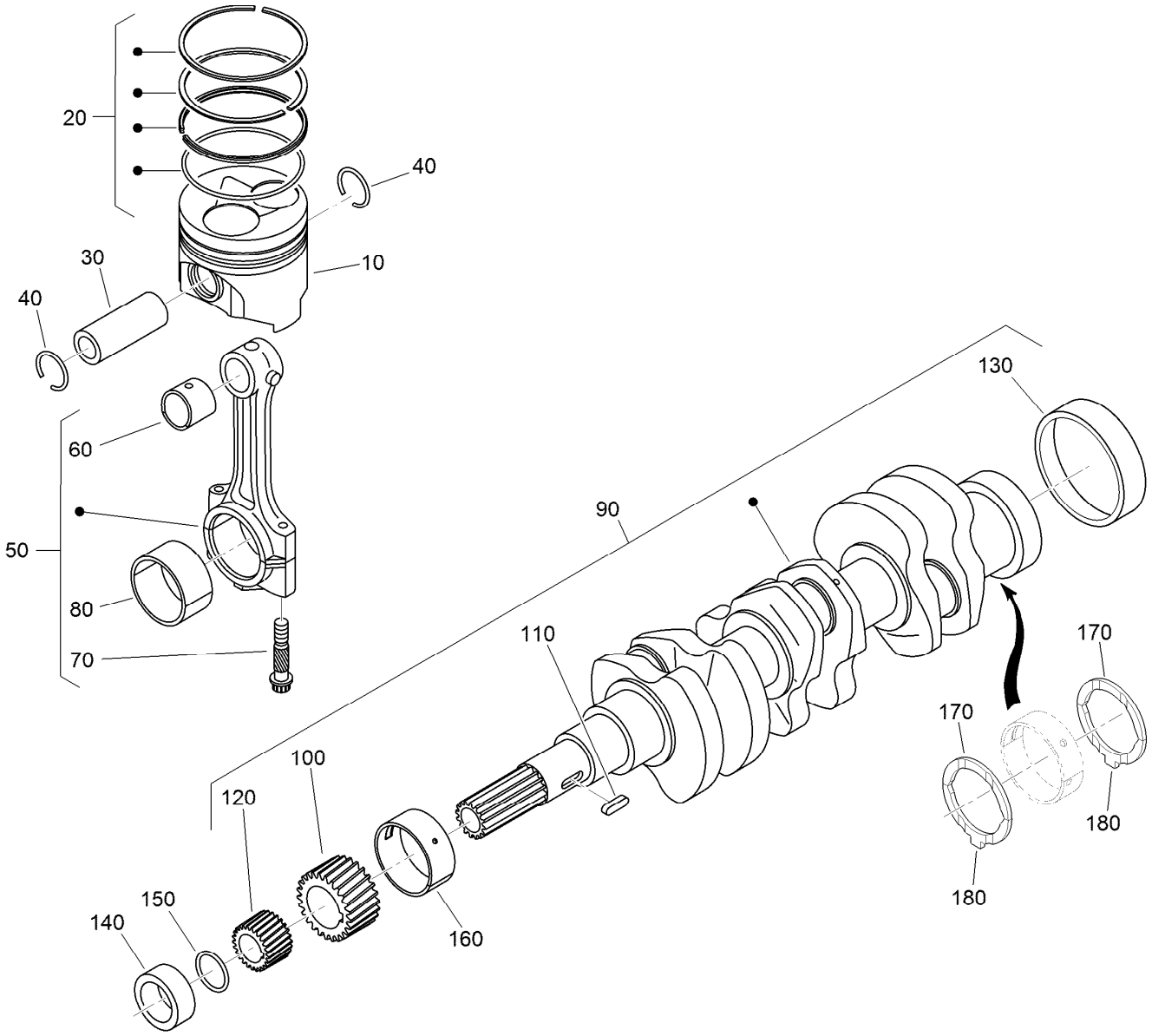


# Piston and Crankshaft Assembly

| Ref. | Part Number | Qty. | Description |
|---|---|---|---|
| 10 | 130-1546 | 3 | Piston (STD) |
| 10 | 130-1549 | 3 | Piston (+0.50Mm) |
| 20 | 130-1506 | 3 | Piston Ring ASM (STD) |
| 20 | 130-1507 | 3 | Piston Ring ASM (+0.50Mm) |
| 30 | 98-9513 | 3 | Pin-Piston |
| 40 | 98-9514 | 6 | Circlip-Pin, Piston |
| 50 | 117-7586 | 3 | Connecting Rod ASM |
| 60 | 115-3014 | 3 | Bushing-Pin, Piston |
| 70 | 98-9517 | 6 | Bolt-Rod, Connecting |
| 80 | 98-9553 | 3 | Bearing-Rod (STD) |
| 80 | 98-9519 | 3 | Bearing-Rod (-0.2Mm) |
| 80 | 117-7588 | 3 | Metal-Crankpin (-0.4Mm) |
| 90 | 130-1375 | 1 | Crankshaft ASM |
| 100 | 117-7561 | 1 | Gear-Crankshaft |

| Ref. | Part Number | Qty. | Description |
|---|---|---|---|
| 110 | 98-9666 | 1 | Key |
| 120 | 127-0445 | 1 | Gear-Drive, Oil Pump |
| 130 | 98-9522 | 1 | Sleeve-Crankshaft |
| 140 | 127-0444 | 1 | Collar-Crankshaft |
| 150 | 105-3783 | 1 | O-Ring |
| 160 | 112-7005 | 1 | Bearing-Main (STD) |
| 160 | 98-9528 | 1 | Bearing-Main (-0.2Mm) |
| 160 | 130-1274 | 1 | Metal-Crankshaft (-0.40Mm) |
| 170 | 98-9413 | 2 | Bearing-Thrust (STD) |
| 170 | 127-0416 | 2 | Metal-Side (+0.2Mm) |
| 170 | 127-0417 | 2 | Metal-Side (+0.40Mm) |
| 180 | 98-9688 | 2 | Bearing-Thrust (STD) |
| 180 | 127-0437 | 2 | Metal-Side (+0.2Mm) |
| 180 | 127-0438 | 2 | Metal-Side (+0.40Mm) |

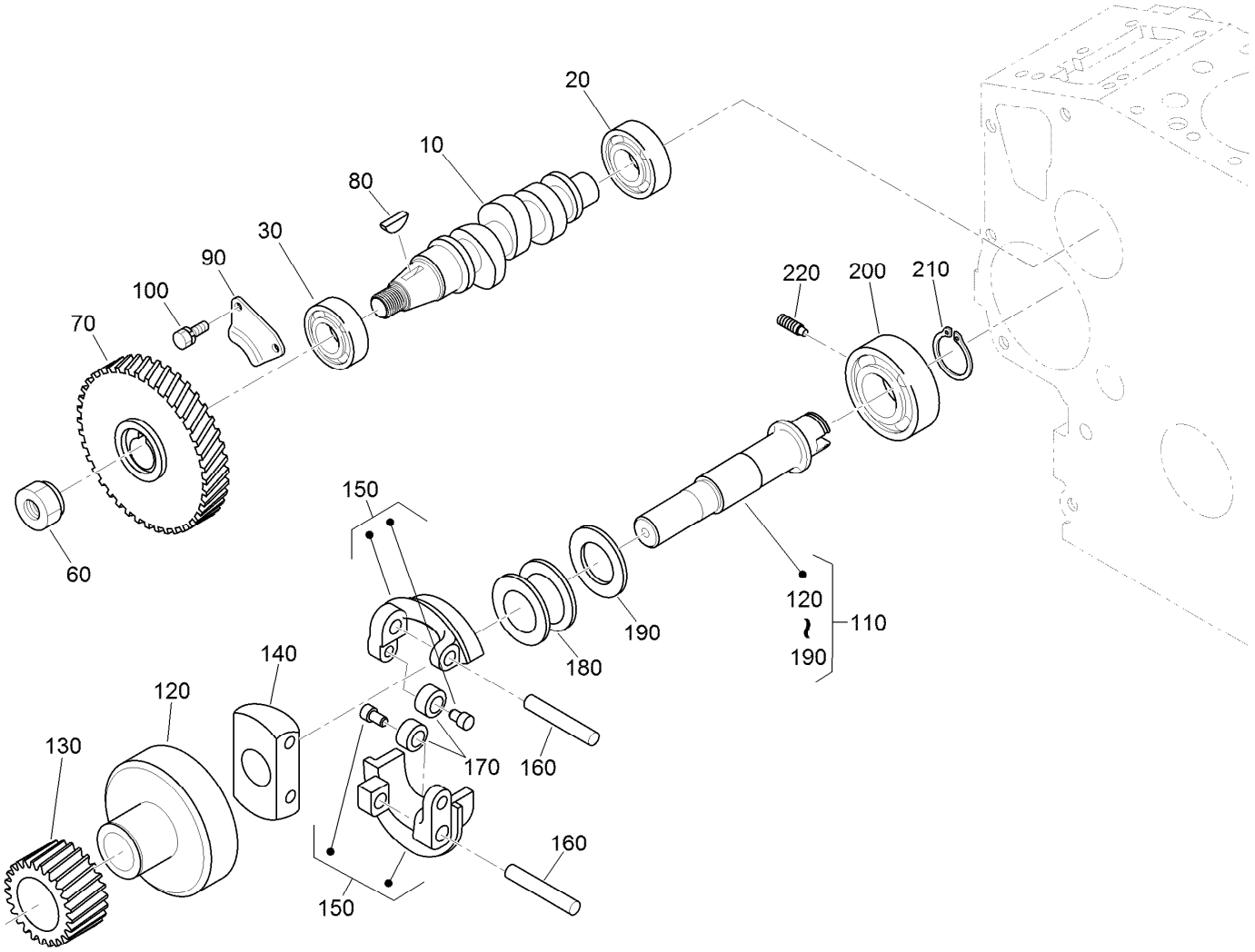


# Fuel Camshaft and Governor Shaft Assembly

| Ref. | Part Number | Qty. | Description |
|---|---|---|---|
| 10 | 98-9459 | 1 | Camshaft-Fuel |
| 20 | 107-9077 | 1 | Bearing-Ball |
| 30 | 107-9078 | 1 | Bearing-Ball |
| 60 | 130-1512 | 1 | Nut |
| 70 | 120-2562 | 1 | Gear-Pump, Injection |
| 80 | 98-9595 | 1 | Key-Woodruff |
| 90 | 98-9511 | 1 | Stopper-Fuel, Camshaft |
| 100 | 98-7692 | 2 | Bolt |
| 110 | 130-1255 | 1 | Governor Shaft ASM |
| 120 | 98-9562 | 1 | Holder-Gear, Governor |

| Ref. | Part Number | Qty. | Description |
|---|---|---|---|
| 130 | 98-9673 | 1 | Gear-Governor |
| 140 | 98-9561 | 1 | Holder-Weight, Governor |
| 150 | 130-1240 | 2 | Governor Weight ASM |
| 160 | 98-9560 | 2 | Shaft-Weight, Governor |
| 170 | 98-9692 | 2 | Roller |
| 180 | 98-9563 | 1 | Sleeve-Governor |
| 190 | 98-9564 | 1 | Washer-Thrust |
| 200 | 107-9079 | 1 | Bearing-Ball |
| 210 | 98-9657 | 1 | Circlip-Shaft, Governor |
| 220 | 98-9565 | 1 | Screw-Set |

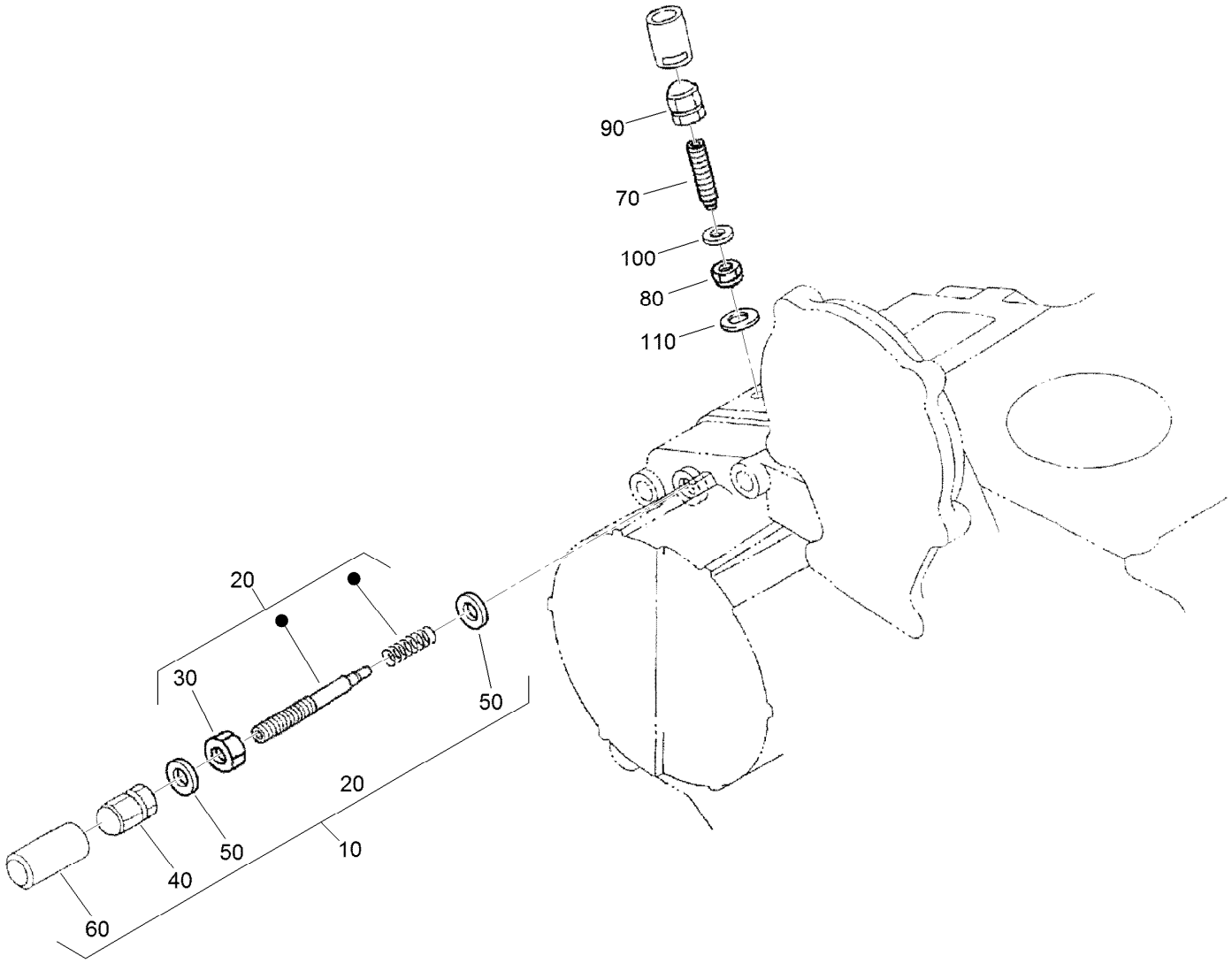


# Idle Apparatus Assembly

| *Ref.* | *Part Number* | *Qty.* | *Description* |
|---|---|---|---|
| 10 | 98-9678 | 1 | Idle Apparatus ASM |
| 20 | 112-7014 | 1 | Adjusting Bolt ASM |
| 30 | 98-9439 | 1 | Nut |
| 40 | 112-0181 | 1 | Nut |
| 50 | 98-7654 | 2 | Gasket |
| 60 | 98-7656 | 1 | Cap |
| 70 | 112-7015 | 1 | Bolt-Adjusting |
| 80 | 100-2175 | 1 | Nut-Lock |
| 90 | 112-0181 | 1 | Nut |
| 100 | 98-7654 | 1 | Gasket |
| 110 | 107-9081 | 1 | Gasket |

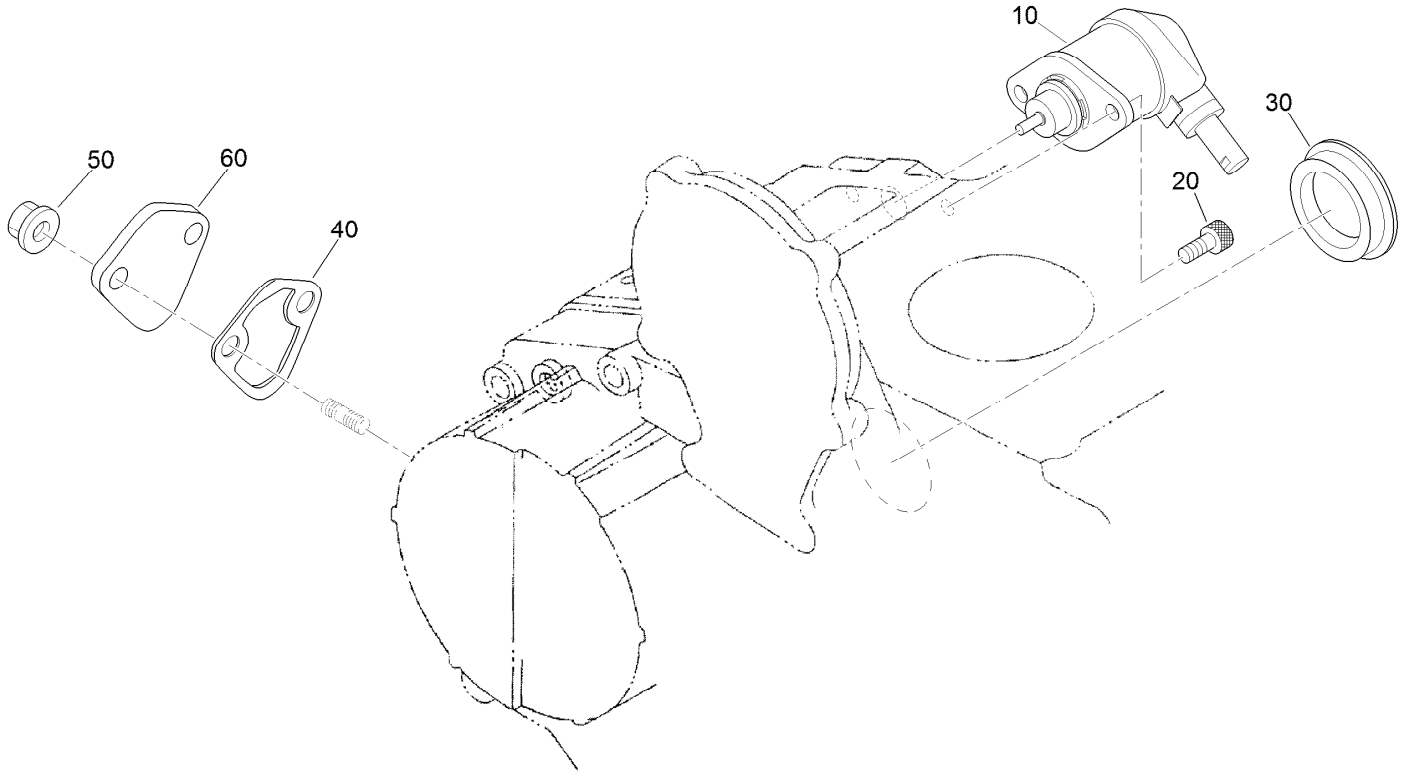


# Stop Solenoid and Fuel Pump Cover Assembly

| *Ref.* | *Part Number* | *Qty.* | *Description* |
|---|---|---|---|
| 10 | 104-5155 | 1 | Solenoid-Stop |
| 20 | 130-1155 | 2 | Screw-HSH |
| 30 | 99-3514 | 1 | Cover |
| 40 | 117-7562 | 1 | Gasket-Pump, Fuel |
| 50 | 100-2203 | 2 | Nut-Flange |
| 60 | 112-7016 | 1 | Cover-Pump |

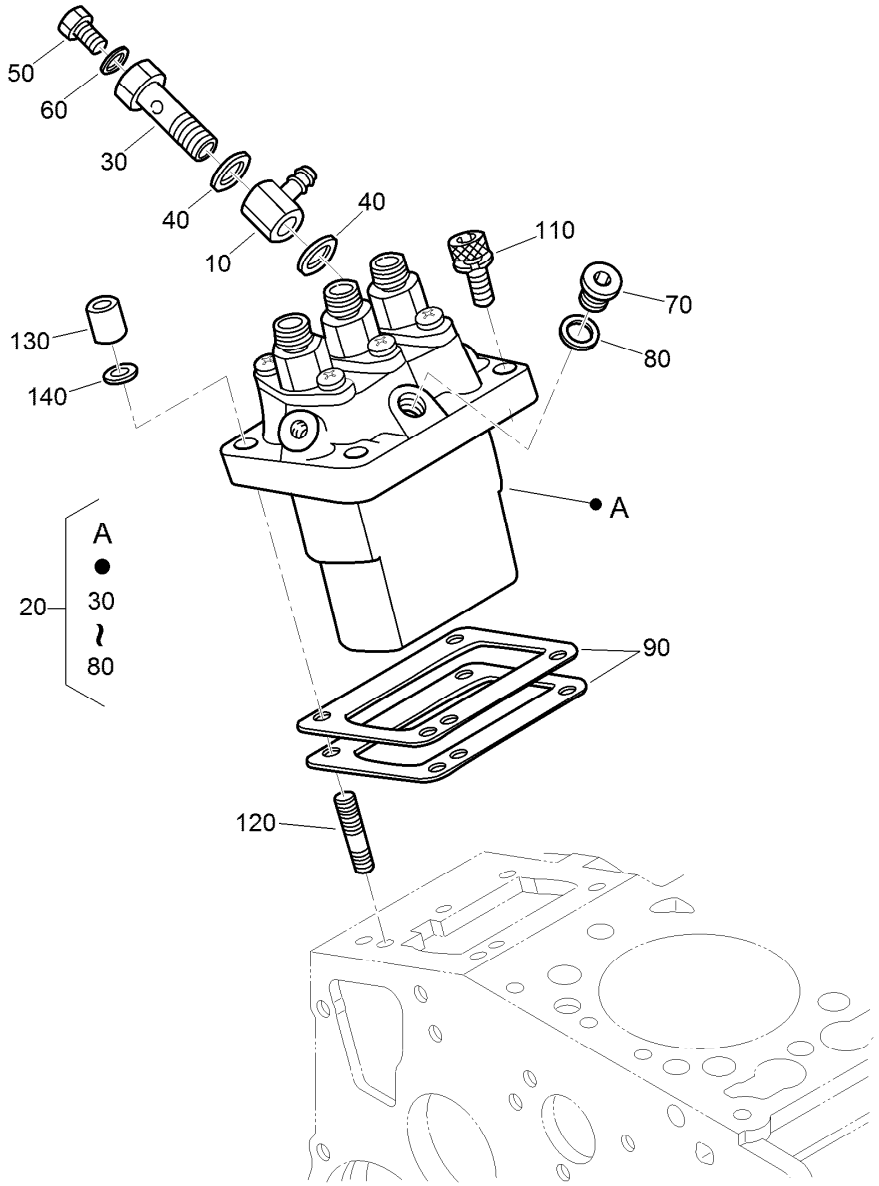


# Injection Pump Assembly

| Ref. | Part Number | Qty. | Description |
|---|---|---|---|
| 10 | 98-9596 | 1 | Joint-Eye |
| 20 | 98-9643 | 1 | Injection Pump ASM |
| 30 | 98-9464 | 1 | Bolt-Joint |
| 40 | 98-9445 | 2 | Gasket |
| 50 | 98-9430 | 1 | Screw |
| 60 | 98-9446 | 1 | Gasket |
| 70 | 98-9466 | 1 | Plug |
| 80 | 98-9451 | 1 | Gasket |
| 90 | 98-9456 | 1 | Shim-Injection (0.20Mm) |

| Ref. | Part Number | Qty. | Description |
|---|---|---|---|
| 90 | 98-9457 | 1 | Shim-Injection (0.25Mm) |
| 90 | 98-9458 | 1 | Shim-Injection (0.30Mm) |
| 90 | 115-3046 | 1 | Shim-Injection (0.35Mm) |
| 90 | 115-3045 | 1 | Shim-Injection (0.175Mm) |
| 110 | 117-7564 | 2 | Bolt-Hex Soc HD |
| 120 | 98-9438 | 2 | Stud |
| 130 | 98-9440 | 2 | Nut-Cap |
| 140 | 98-7699 | 2 | Washer-Spring |

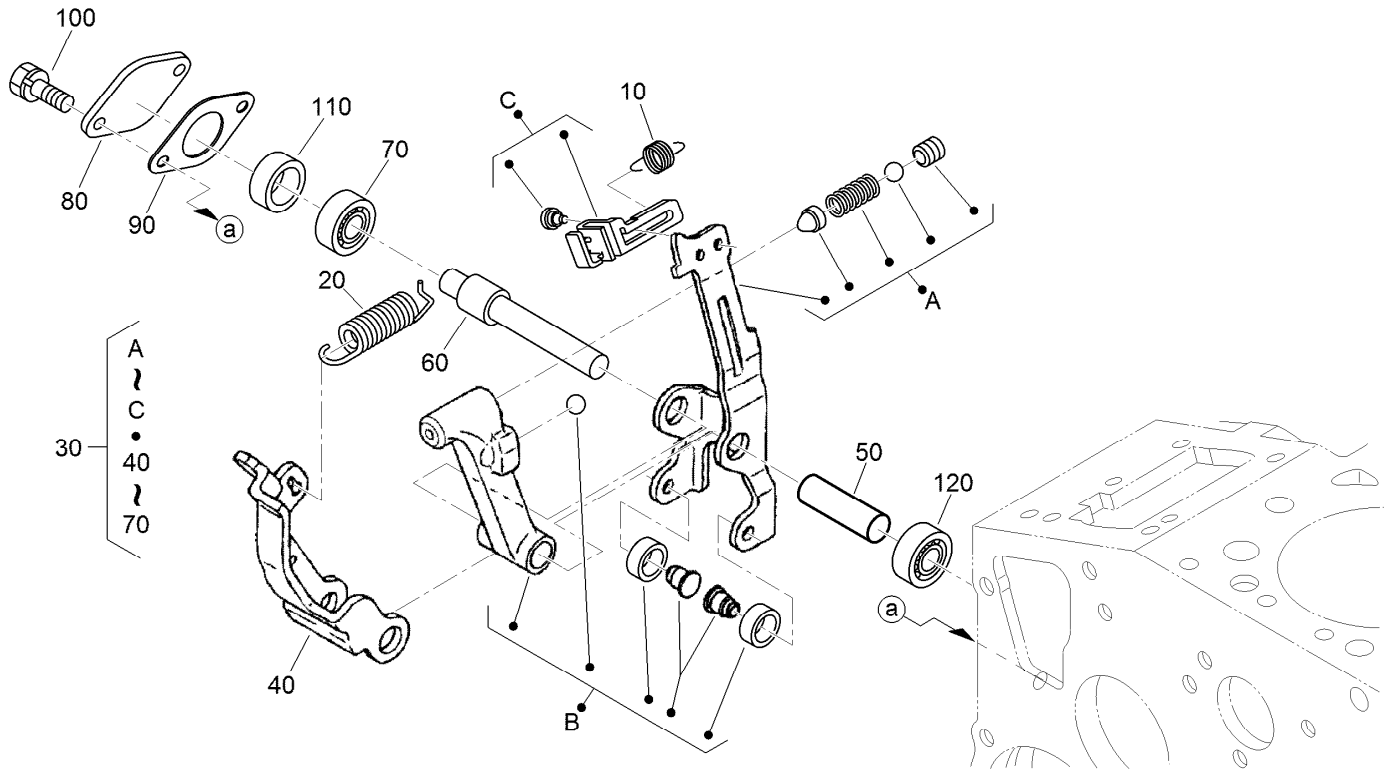


# Governor Assembly

| Ref. | Part Number | Qty. | Description |
|---|---|---|---|
| 10 | 105-3786 | 1 | Spring-Start |
| 20 | 98-9681 | 1 | Spring-Governor |
| 30 | 115-4502 | 1 | Fork Lever ASM |
| 40 | 107-9084 | 1 | Lever-Fork |
| 50 | 107-9085 | 1 | Shaft-Lever, Fork |
| 60 | 107-9086 | 1 | Shaft-Lever, Fork |
| 70 | 98-9570 | 1 | Bearing-Miniaturize |
| 80 | 115-4122 | 1 | Cover-Shaft, Fork Lever |
| 90 | 98-9682 | 1 | Gasket |
| 100 | 98-9350 | 2 | Bolt |
| 110 | 98-9567 | 1 | Collar |
| 120 | 98-9571 | 1 | Bearing-Miniaturize |

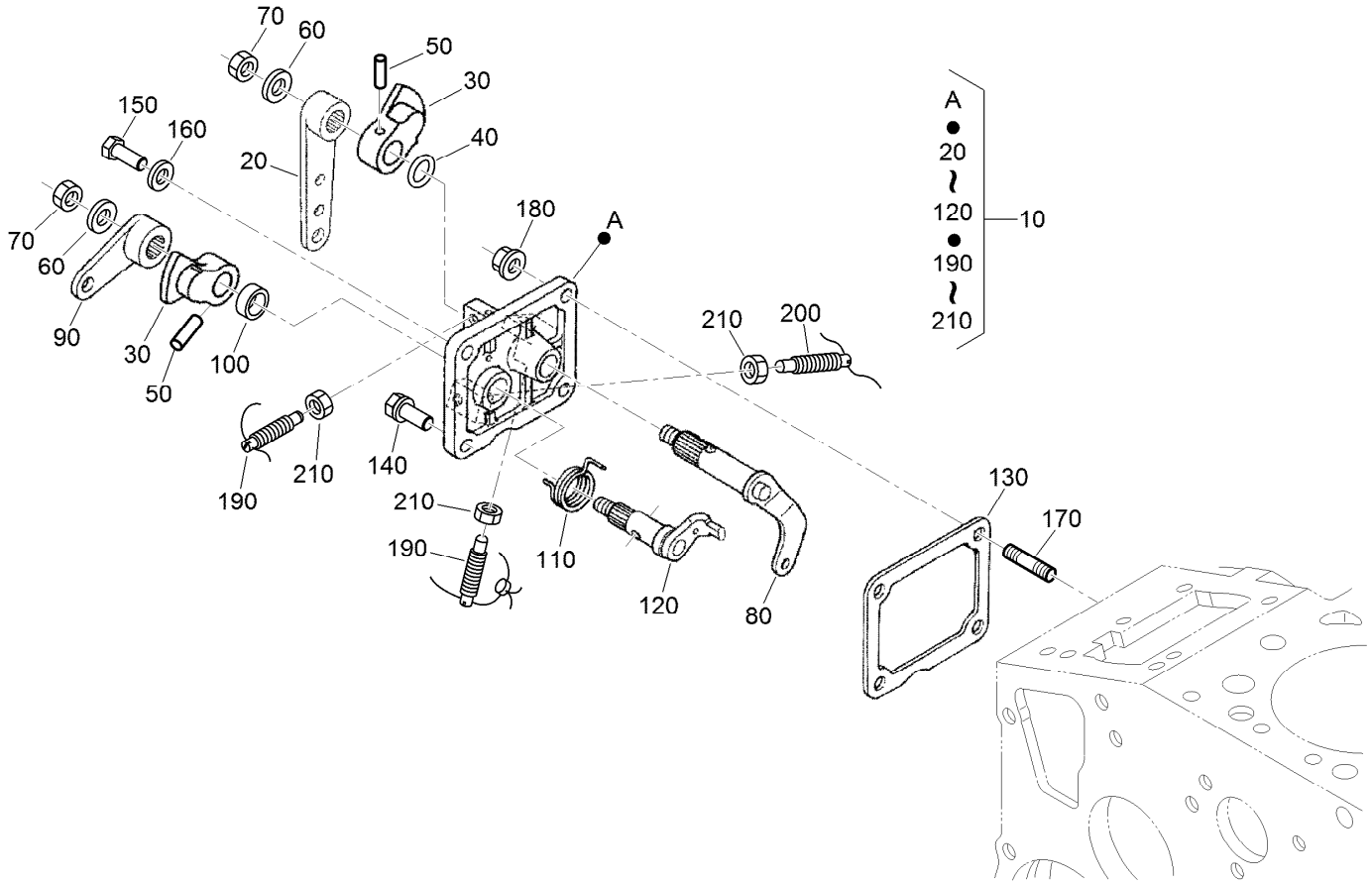


# Speed Control Plate Assembly

| Ref. | Part Number | Qty. | Description |
|---|---|---|---|
| 10 | 105-3735 | 1 | Control Plate ASM |
| 20 | 98-9662 | 1 | Lever-Control, Speed |
| 30 | 98-9572 | 2 | Lever-Control, Speed |
| 40 | 105-3788 | 1 | O-Ring |
| 50 | 98-7602 | 2 | Pin-Spring |
| 60 | 98-9594 | 2 | Washer-Plain |
| 70 | 98-9589 | 2 | Nut |
| 80 | 98-9658 | 1 | Governor Lever ASM |
| 90 | 98-9663 | 1 | Lever-Stop, Engine |
| 100 | 98-7601 | 1 | Seal-Oil |
| 110 | 98-9472 | 1 | Spring-Return |
| 120 | 98-9664 | 1 | Shaft-Lever, Stop |
| 130 | 98-9637 | 1 | Gasket |
| 140 | 98-7692 | 1 | Bolt |
| 150 | 127-0401 | 1 | Bolt-Hex |
| 160 | 98-7654 | 1 | Gasket |
| 170 | 105-3710 | 2 | Stud |
| 180 | 100-2203 | 2 | Nut-Flange |
| 190 | 117-7565 | 2 | Bolt-Adjusting |
| 200 | 117-7566 | 1 | Bolt-Adjusting |
| 210 | 98-7572 | 3 | Nut |

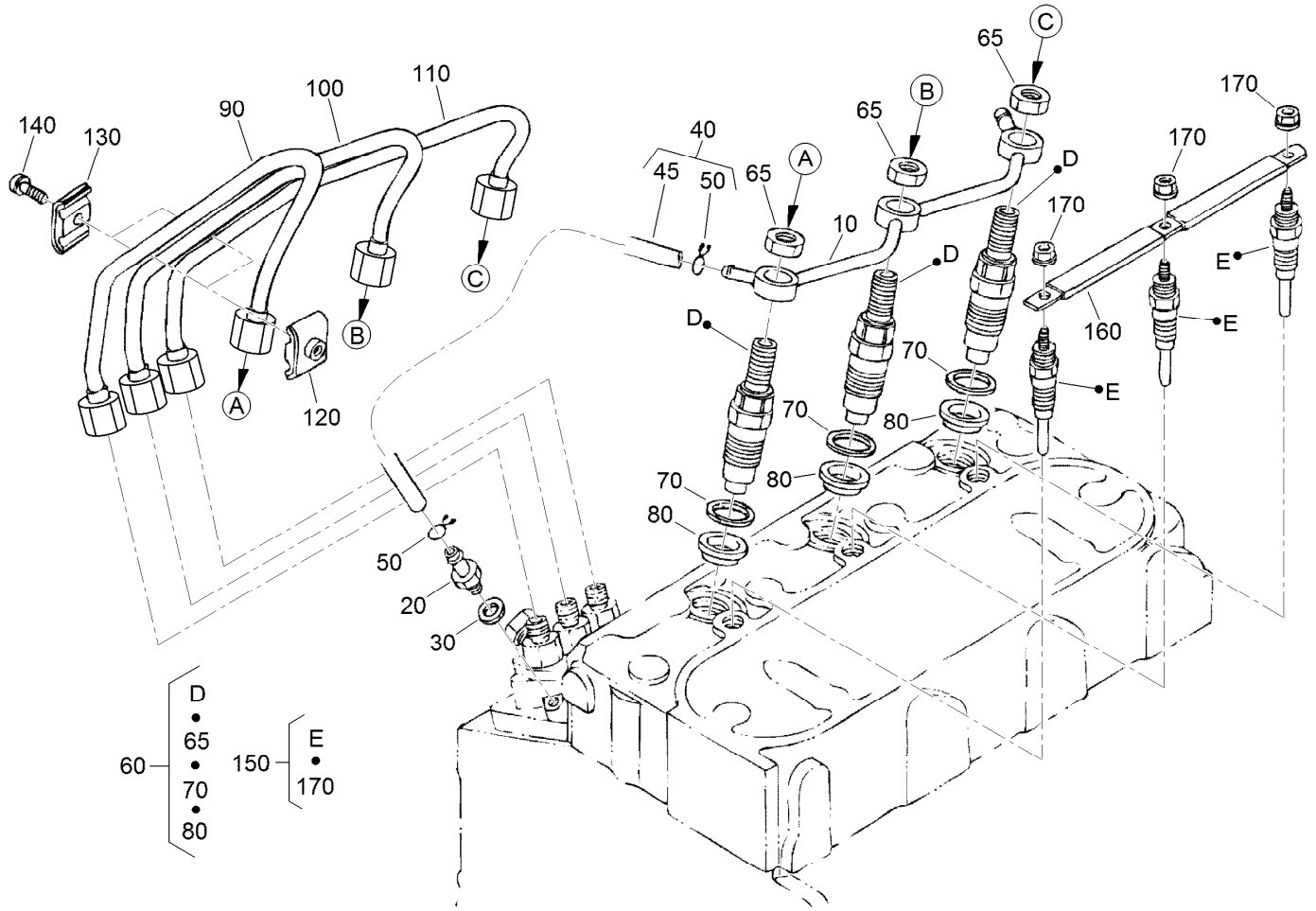


# Nozzle Holder and Glow Plug Assembly

| Ref. | Part Number | Qty. | Description |
|---|---|---|---|
| 10 | 98-9620 | 1 | Overflow Pipe ASM |
| 20 | 98-9431 | 1 | Screw-Bleeder, Air |
| 30 | 98-7654 | 1 | Gasket |
| 40 | 98-9420 | 1 | Overflow Pipe ASM |
| 45 | 112-0182 | 1 | Pipe-Overflow |
| 50 | 98-7671 | 2 | Clip-Pipe |
| 60 | 115-3018 | 3 | Nozzle Holder Kit |
| 65 | 121-2411 | 3 | Nut |
| 70 | 98-7676 | 3 | Gasket |
| 80 | 98-7677 | 3 | Seal-Heat |

| Ref. | Part Number | Qty. | Description |
|---|---|---|---|
| 90 | 98-9653 | 1 | Pipe-Injection |
| 100 | 98-9654 | 1 | Pipe-Injection |
| 110 | 98-9655 | 1 | Pipe-Injection |
| 120 | 98-7682 | 2 | Clamp-Pipe |
| 130 | 98-7683 | 2 | Clamp-Pipe |
| 140 | 98-7684 | 2 | Screw (W/Washer) |
| 150 | 130-1411 | 3 | Plug-Glow |
| 160 | 98-9631 | 1 | Cord-Plug, Glow |
| 170 | 99-8377 | 3 | Nut-Flange |

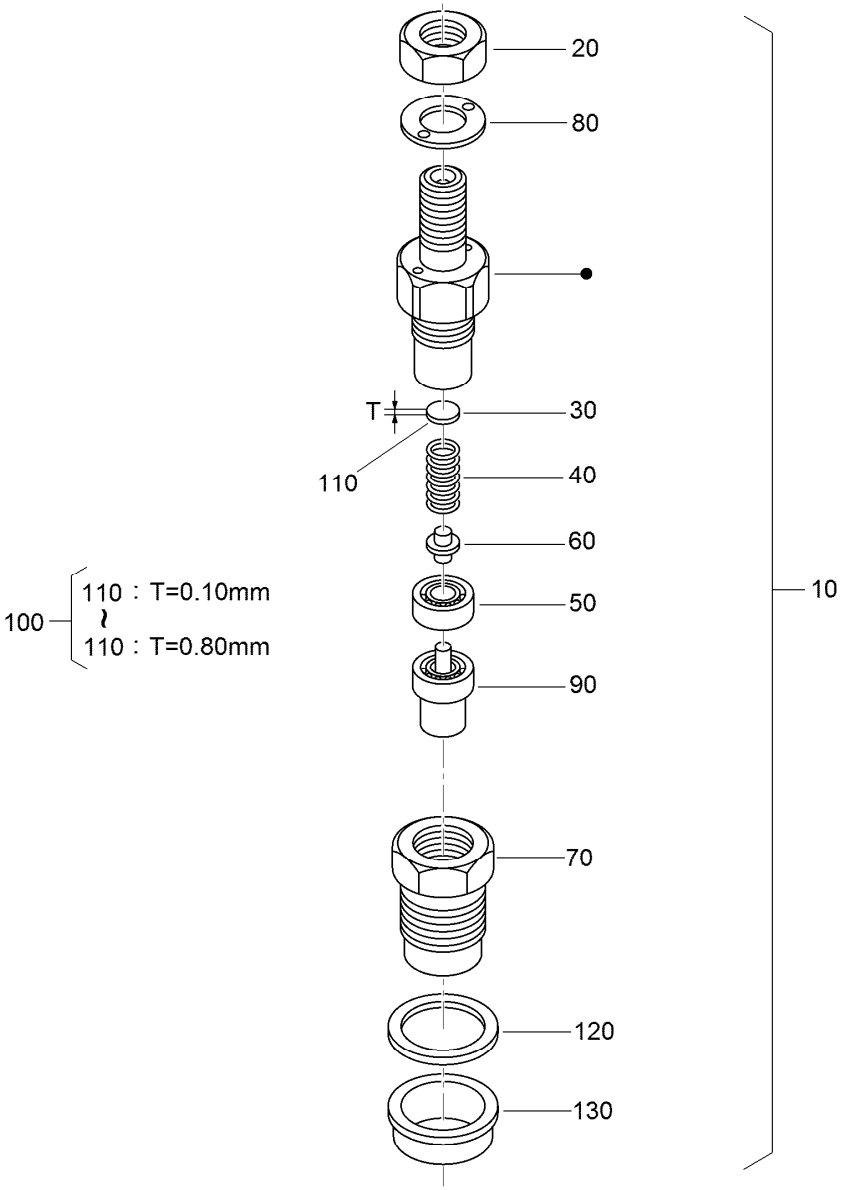


# Nozzle Holder Assembly

| Ref. | Part Number | Qty. | Description |
|---|---|---|---|
| 10 | 115-3018 | 3 | Nozzle Holder Kit |
| 20 | 121-2411 | 3 | Nut |
| 30 | 99-8302 | 3 | Washer-Adjusting |
| 40 | 99-8303 | 3 | Spring-Nozzle |
| 50 | 99-8304 | 3 | Spacer-Distance |
| 60 | 99-8305 | 3 | Rod-Push |
| 70 | 99-8306 | 3 | Nut-Nozzle |
| 80 | 99-8307 | 3 | Washer-Plain |
| 90 | 115-3020 | 3 | Piece-Nozzle |
| 100 | 99-8309 | 3 | Adjusting Washer ASM |
| 100 | 99-8317 | 3 | Washer-Adjust (0.56Mm) |

| Ref. | Part Number | Qty. | Description |
|---|---|---|---|
| 110 | 99-8310 | 3 | Washer-Adjust (0.10Mm) |
| 110 | 99-8311 | 3 | Washer-Adjust (0.20Mm) |
| 110 | 99-8312 | 3 | Washer-Adjust (0.30Mm) |
| 110 | 99-8313 | 3 | Washer-Adjust (0.40Mm) |
| 110 | 99-8314 | 3 | Washer-Adjust (0.50Mm) |
| 110 | 99-8315 | 3 | Washer-Adjust (0.52Mm) |
| 110 | 99-8316 | 3 | Washer-Adjust (0.54Mm) |
| 110 | 99-8318 | 3 | Washer-Adjust (0.58Mm) |
| 110 | 99-8319 | 3 | Washer-Adjust (0.80Mm) |
| 120 | 98-7676 | 3 | Gasket |
| 130 | 98-7677 | 3 | Seal-Heat |

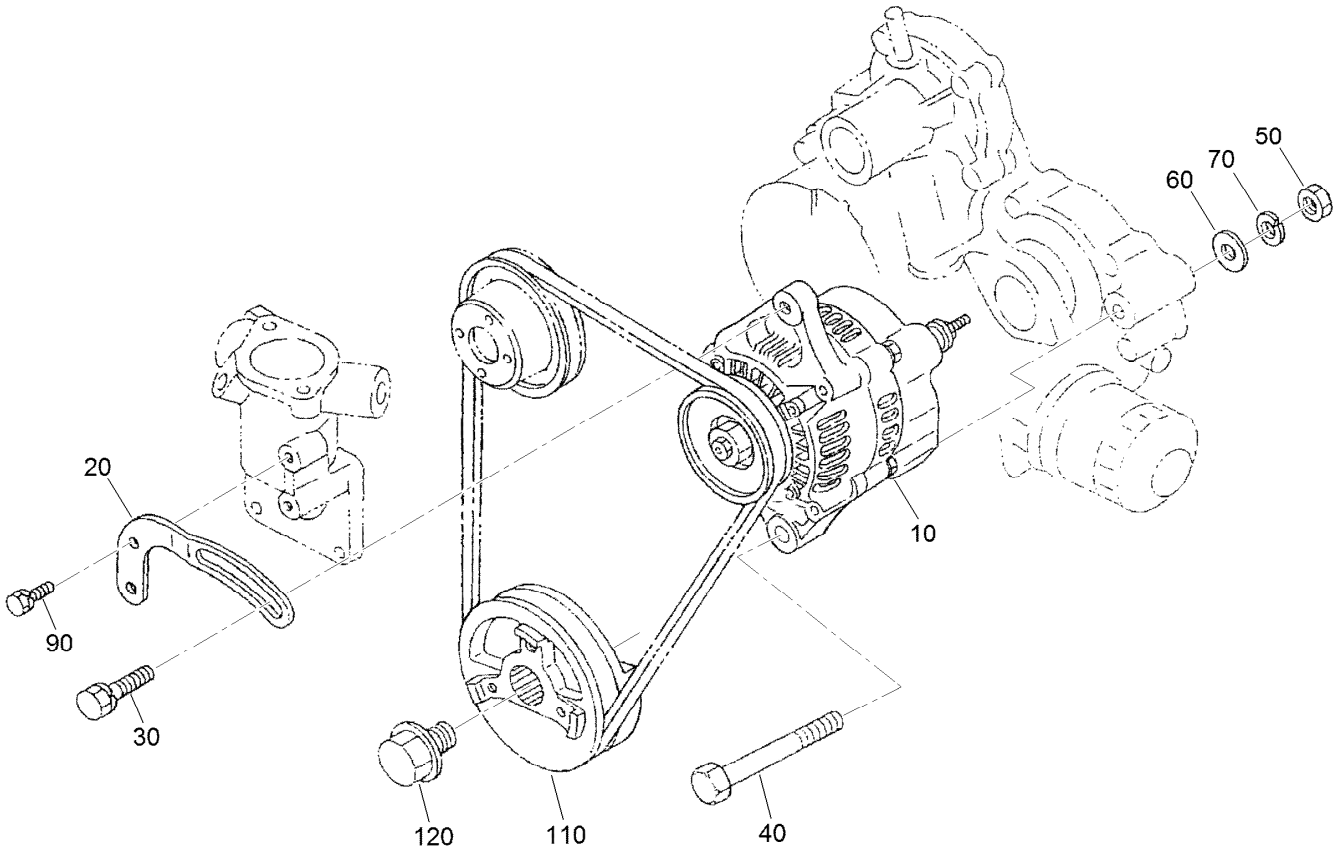


# Alternator and Pulley Assembly

| *Ref.* | *Part Number* | *Qty.* | *Description* |
|---|---|---|---|
| 10 | 98-9474 | 1 | Alternator ASM |
| 20 | 112-7047 | 1 | Stay-Dynamo |
| 30 | 108-7088 | 1 | Bolt |
| 40 | 98-9360 | 1 | Bolt |
| 50 | 98-7737 | 1 | Nut |
| 60 | 98-9366 | 1 | Washer-Plain |
| 70 | 98-7738 | 1 | Washer-Spring |
| 90 | 98-7692 | 1 | Bolt |
| 110 | 98-9473 | 1 | Pulley-Drive, Fan |
| 120 | 98-9585 | 1 | Bolt |

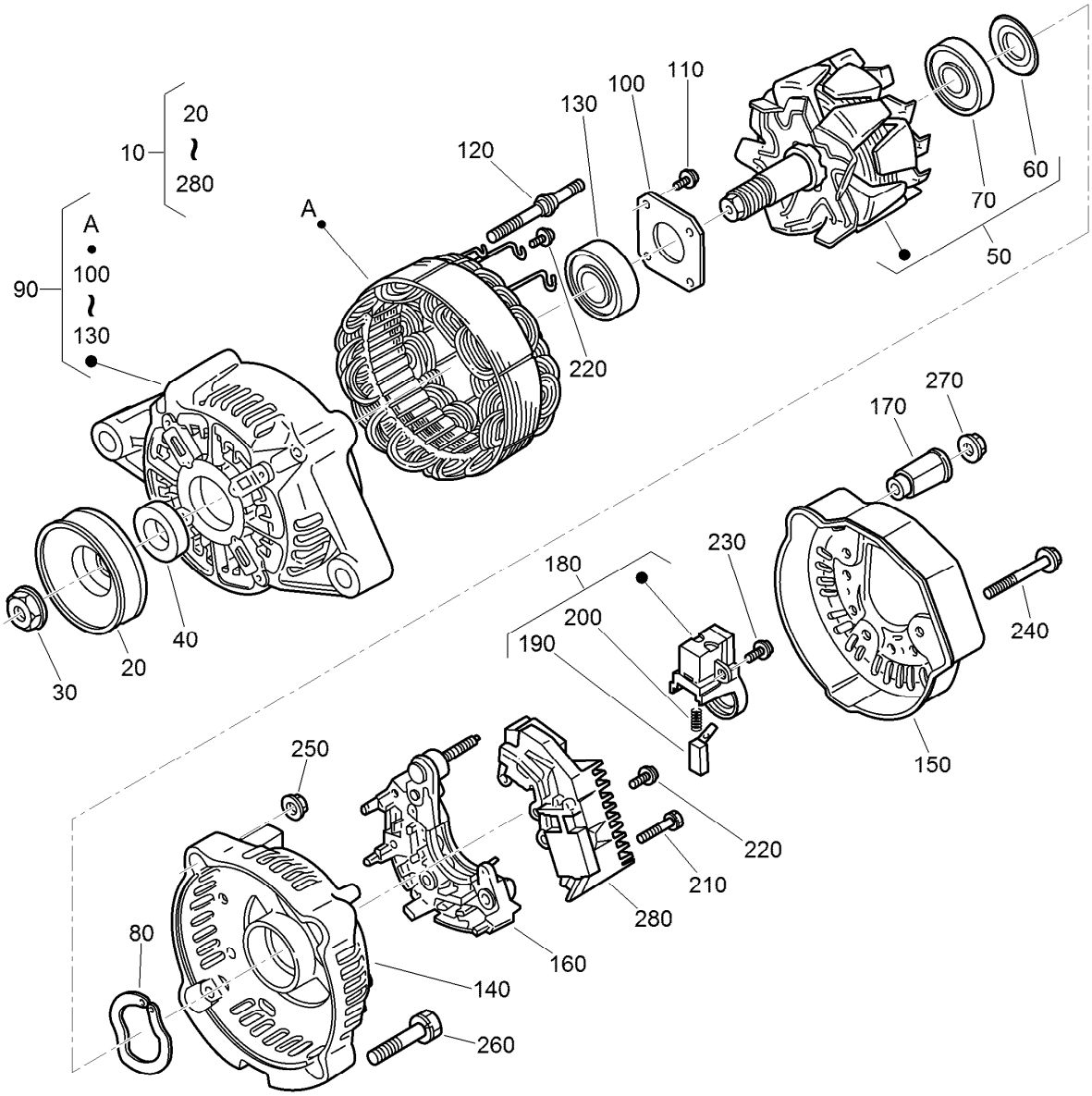


# Alternator Components Assembly

| Ref. | Part Number | Qty. | Description |
|---|---|---|---|
| 10 | 98-9474 | 1 | Alternator ASM |
| 20 | 98-9453 | 1 | Pulley-Dynamo |
| 30 | 98-7708 | 1 | Nut |
| 40 | 98-7709 | 1 | Collar |
| 50 | 107-0136 | 1 | Rotor ASM |
| 60 | 98-7711 | 1 | Cover-Bearing |
| 70 | 107-0138 | 1 | Bearing-Ball |
| 80 | 98-7713 | 1 | Washer-Thrust |
| 90 | 107-0139 | 1 | Drive End Frame ASM |
| 100 | 98-7715 | 1 | Plate-Retainer |
| 110 | 98-7716 | 4 | Screw-Head, Round |
| 120 | 98-7717 | 2 | Bolt-Through |
| 130 | 107-0137 | 1 | Bearing-Ball |
| 140 | 107-9087 | 1 | Frame-End |

| Ref. | Part Number | Qty. | Description |
|---|---|---|---|
| 150 | 107-0140 | 1 | Cover-End |
| 160 | 127-1612 | 1 | Rectifier ASM |
| 170 | 98-7722 | 1 | Bushing-Insulation |
| 180 | 107-0141 | 1 | Brush Holder ASM |
| 190 | 98-7724 | 2 | Brush |
| 200 | 98-7725 | 2 | Spring-Brush |
| 210 | 98-7726 | 2 | Screw-Head, Round |
| 220 | 98-7727 | 6 | Screw-Head, Round |
| 230 | 98-7728 | 1 | Screw-Head, Round |
| 240 | 98-7729 | 3 | Bolt |
| 250 | 98-7730 | 2 | Nut |
| 260 | 98-7731 | 2 | Bolt |
| 270 | 98-7732 | 1 | Nut |
| 280 | 110-3799 | 1 | Regulator ASM |

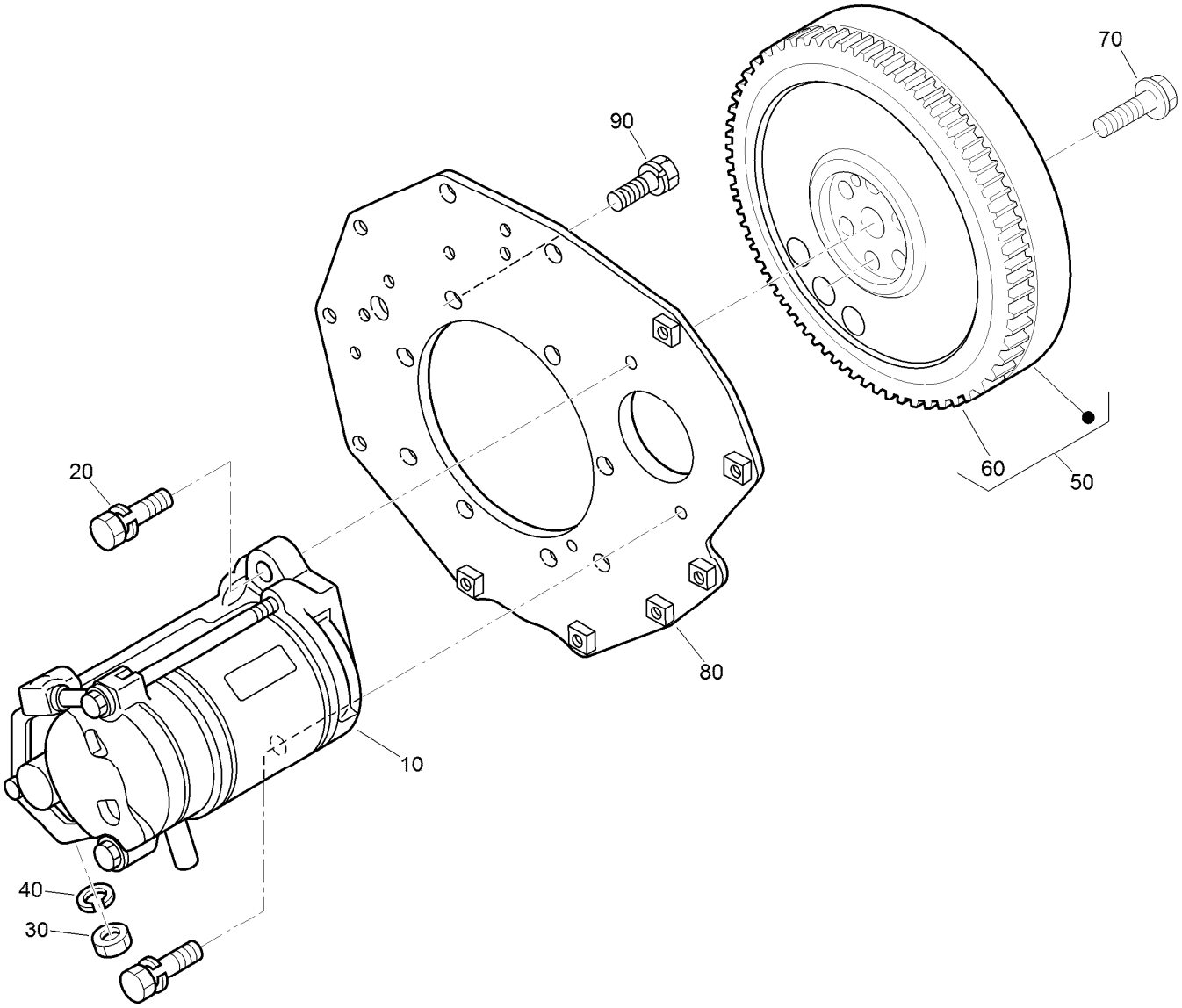


# Starter and Flywheel Assembly

| *Ref.* | *Part Number* | *Qty.* | *Description* |
|---|---|---|---|
| 10 | 98-9705 | 1 | Starter ASM |
| 20 | 98-7697 | 2 | Bolt |
| 30 | 98-7739 | 1 | Nut |
| 40 | 105-2893 | 1 | Washer-Spring |
| 50 | 105-3784 | 1 | Flywheel ASM |
| 60 | 115-3015 | 1 | Gear-Ring |
| 70 | 98-9537 | 6 | Bolt-Flywheel |
| 80 | 98-9486 | 1 | Plate-End, Rear |
| 90 | 98-9392 | 8 | Bolt |

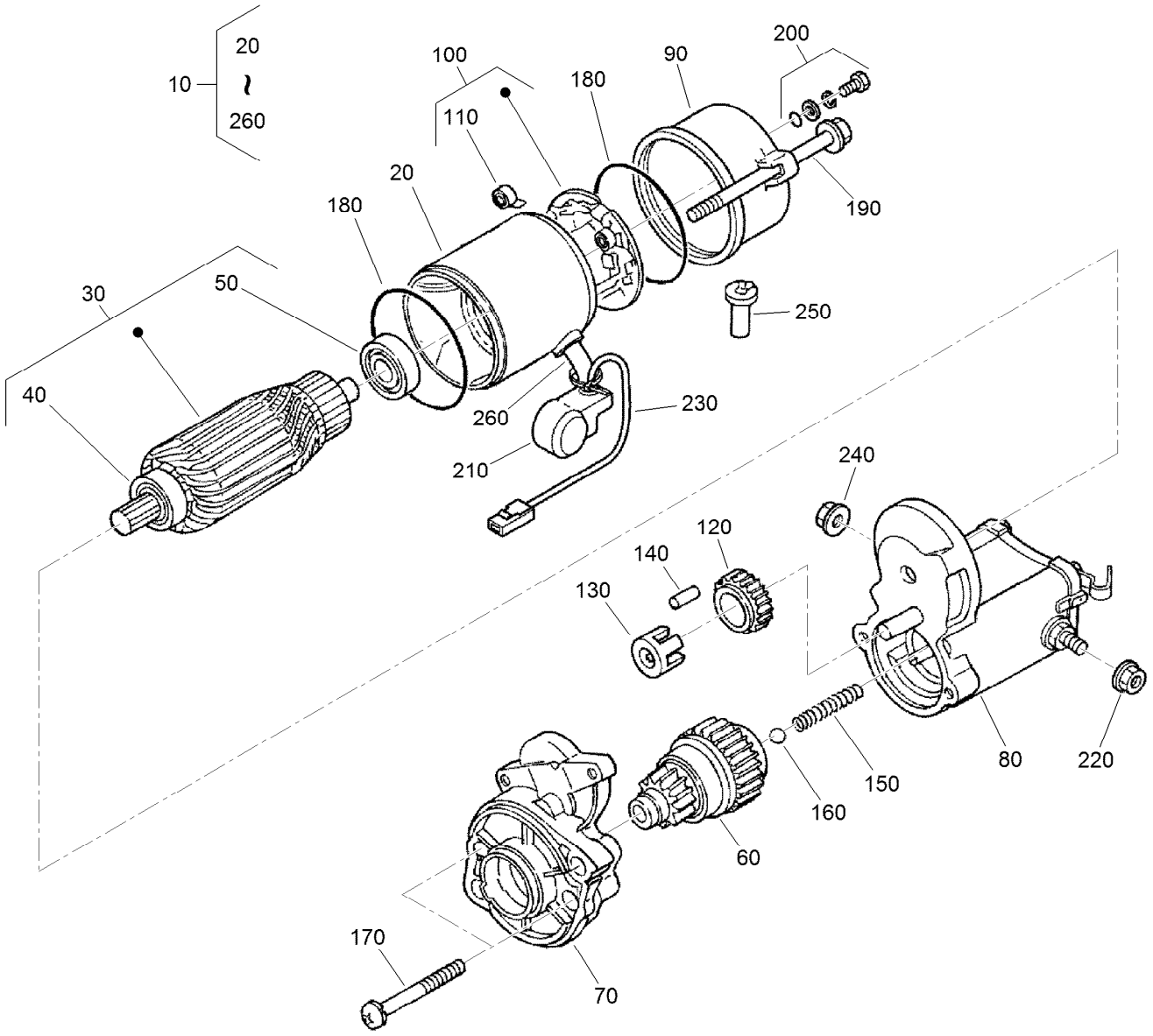


# Starter Component Assembly

| Ref. | Part Number | Qty. | Description |
|---|---|---|---|
| 10 | 98-9705 | 1 | Starter ASM |
| 20 | 104-8608 | 1 | Yoke ASM |
| 30 | 98-7742 | 1 | Armature ASM |
| 40 | 98-7744 | 1 | Bearing |
| 50 | 98-7743 | 1 | Bearing |
| 60 | 99-8373 | 1 | Clutch-Running, Over |
| 70 | 99-8374 | 1 | Frame-End, Drive |
| 80 | 105-3746 | 1 | Magnetic Switch ASM |
| 90 | 98-7748 | 1 | Frame-End |
| 100 | 98-7749 | 1 | Brush Holder ASM |
| 110 | 98-7750 | 4 | Spring-Brush |
| 120 | 98-7751 | 1 | Gear |
| 130 | 98-7752 | 1 | Retainer |

| Ref. | Part Number | Qty. | Description |
|---|---|---|---|
| 140 | 98-7753 | 5 | Roller |
| 150 | 98-7754 | 1 | Spring |
| 160 | 98-7755 | 1 | Ball |
| 170 | 98-7756 | 2 | Bolt |
| 180 | 98-7757 | 2 | O-Ring |
| 190 | 100-9240 | 2 | Bolt |
| 200 | 98-7758 | 2 | Bolt ASM |
| 210 | 99-8375 | 1 | Cover |
| 220 | 99-8371 | 1 | Nut-Hex |
| 230 | 98-9711 | 1 | Cord-Solenoid, Stop |
| 240 | 99-8376 | 1 | Nut-Hex |
| 250 | 98-7759 | 1 | Pipe-Drain |
| 260 | 98-9712 | 1 | Band-Cover |

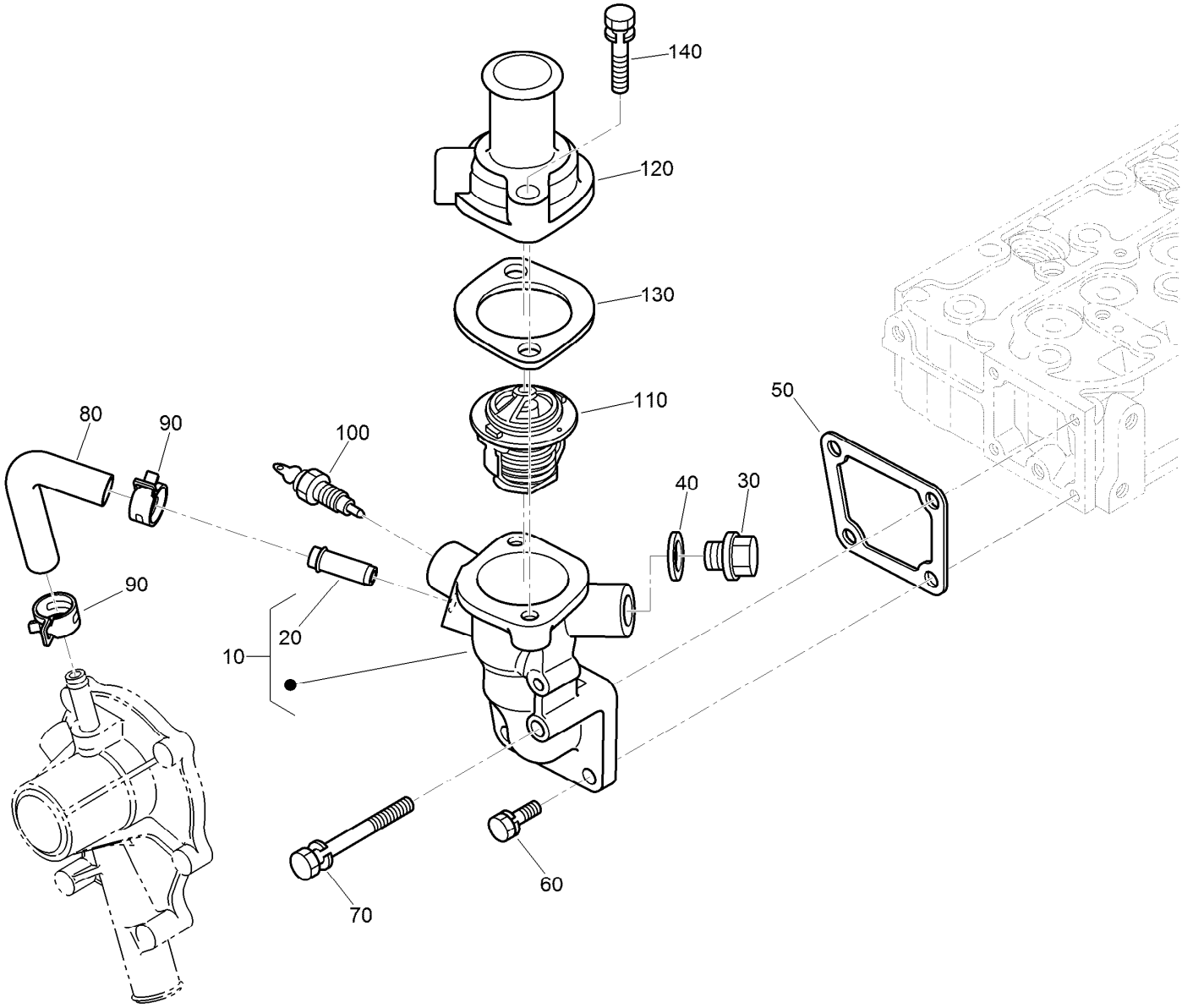


# Water Flange and Thermostat Assembly

| Ref. | Part Number | Qty. | Description |
|---|---|---|---|
| 10 | 98-9713 | 1 | Water Flange ASM |
| 20 | 98-9580 | 1 | Pipe-Return, Water |
| 30 | 105-3747 | 1 | Plug |
| 40 | 99-3583 | 1 | Gasket |
| 50 | 98-9638 | 1 | Gasket-Flange, Water |
| 60 | 98-7692 | 3 | Bolt |
| 70 | 98-9356 | 1 | Bolt |
| 80 | 98-9578 | 1 | Pipe-Return, Water |
| 90 | 125-9078 | 2 | Clamp-Hose |
| 100 | 98-9719 | 1 | Thermoswitch |
| 110 | 98-7778 | 1 | Thermostat ASM |
| 120 | 98-9471 | 1 | Cover-Thermostat |
| 130 | 105-3748 | 1 | Gasket-Thermostat |
| 140 | 98-7777 | 2 | Bolt |

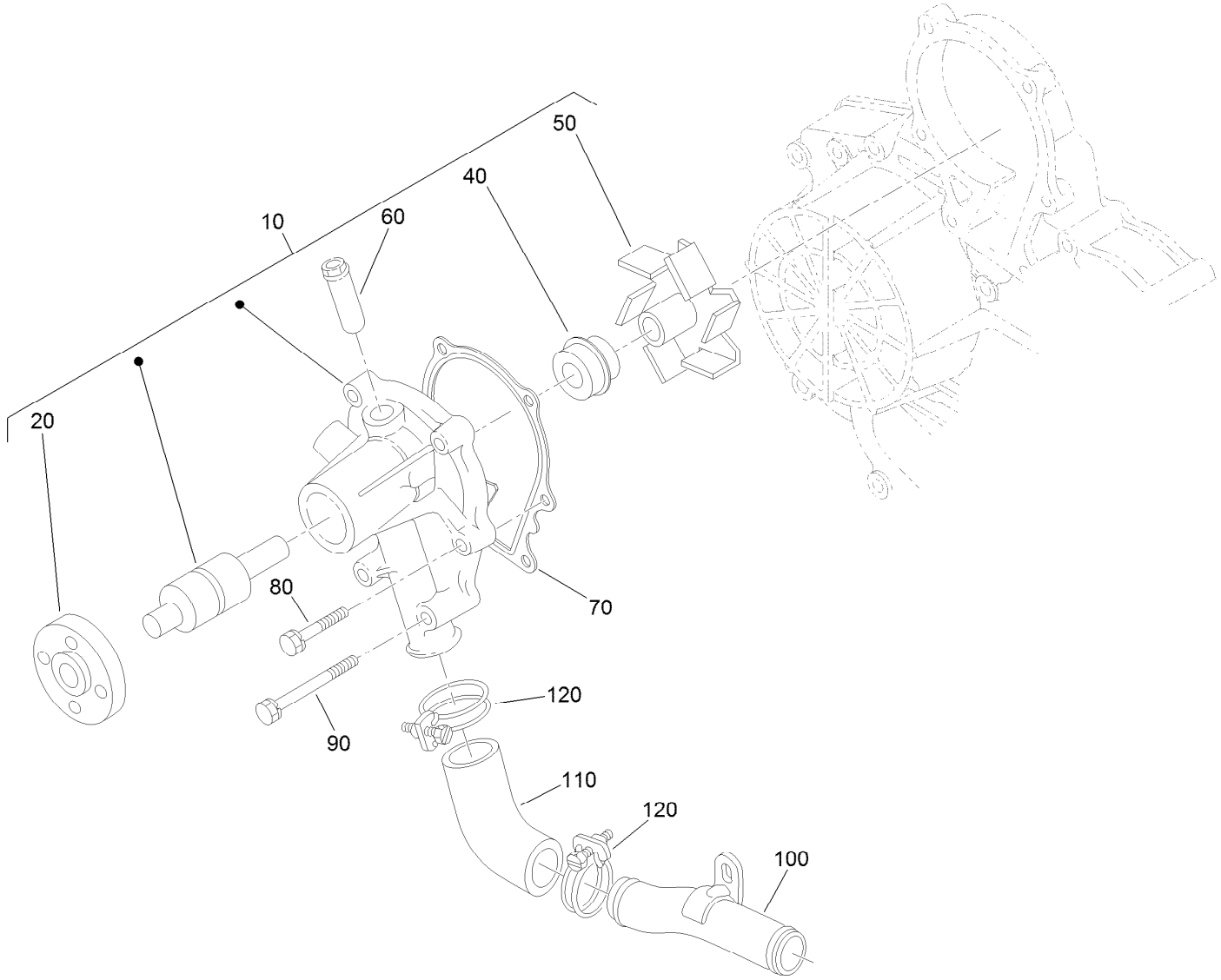


# Water Pump Assembly

| Ref. | Part Number | Qty. | Description |
|---|---|---|---|
| 10 | 107-9089 | 1 | Water Pump ASM |
| 20 | 99-3516 | 1 | Flange-Pump, Water |
| 40 | 105-3750 | 1 | Mechanical Seal ASM |
| 50 | 112-7017 | 1 | Impeller-Pump, Water |
| 60 | 100-1932 | 1 | Pipe-Return, Water |
| 70 | 99-3454 | 1 | Gasket-Pump, Water |
| 80 | 98-9353 | 4 | Bolt |
| 90 | 107-9090 | 2 | Bolt |
| 100 | 98-9716 | 1 | Pipe-Water |
| 110 | 107-9091 | 1 | Pipe-Water |
| 120 | 127-0439 | 2 | Clamp-Hose |

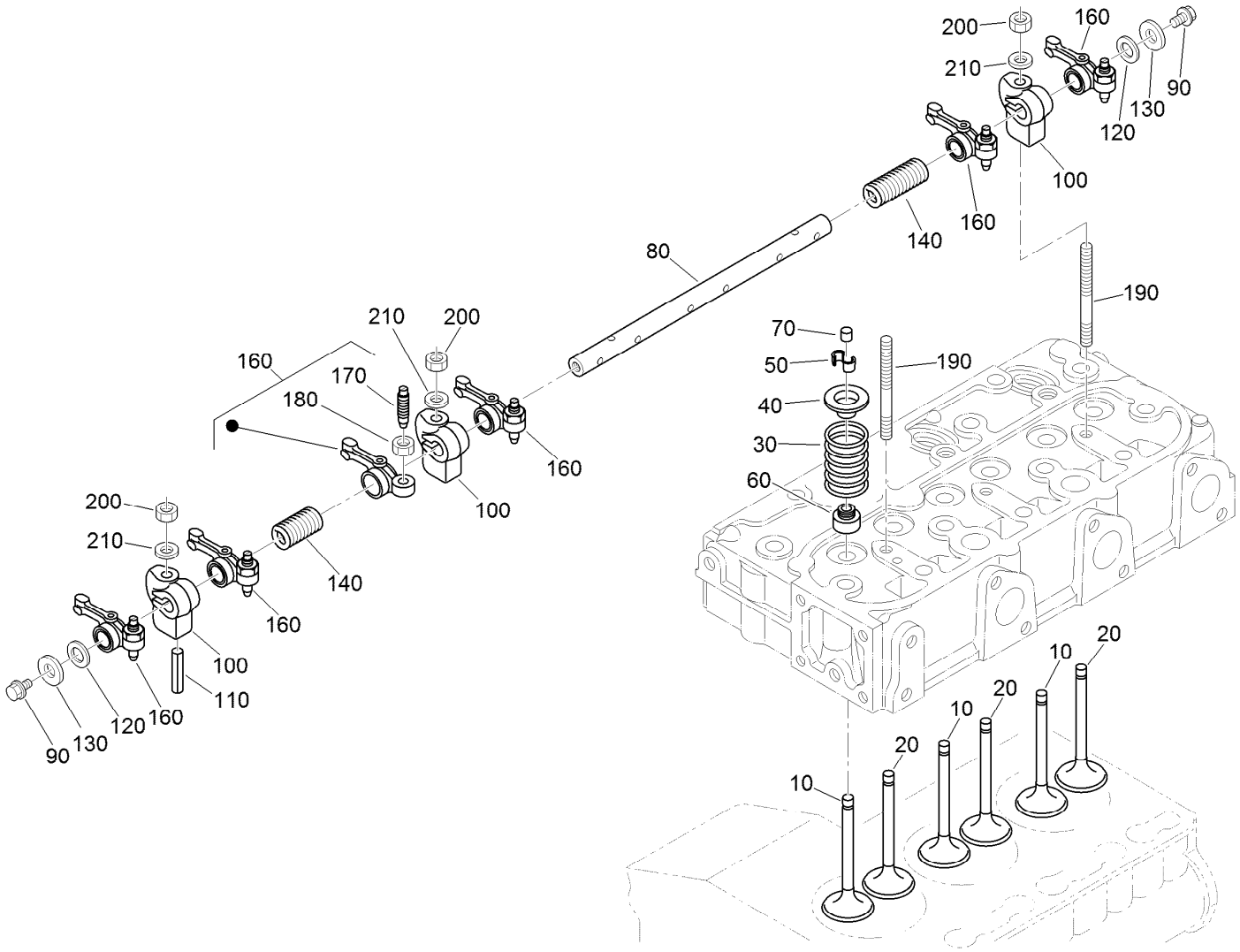


# Valve and Rocker Arm Assembly

| Ref. | Part Number | Qty. | Description |
|---|---|---|---|
| 10 | 112-7018 | 3 | Valve-Inlet |
| 20 | 120-2564 | 3 | Valve-Exhaust |
| 30 | 98-9648 | 6 | Spring-Valve |
| 40 | 107-9092 | 6 | Retainer-Spring |
| 50 | 117-7572 | 6 | Collet-Spring, Valve |
| 60 | 99-8385 | 6 | Seal-Stem, Valve |
| 70 | 98-9497 | 6 | Cap-Valve |
| 80 | 130-1248 | 1 | Shaft-Arm, Rocker |
| 90 | 99-8363 | 2 | Bolt-Flange |
| 100 | 98-9505 | 3 | Bracket-Arm, Rocker |

| Ref. | Part Number | Qty. | Description |
|---|---|---|---|
| 110 | 105-3758 | 1 | Pin-Spring |
| 120 | 98-9507 | 2 | Washer-Shaft, Rocker Arm |
| 130 | 110-3832 | 2 | Washer-Plain |
| 140 | 98-9504 | 2 | Spring-Arm, Rocker |
| 160 | 112-7020 | 6 | Rocker Arm ASM |
| 170 | 98-9502 | 6 | Screw-Adjusting |
| 180 | 98-9503 | 6 | Nut |
| 190 | 98-9506 | 3 | Stud |
| 200 | 98-9393 | 3 | Nut |
| 210 | 98-9385 | 3 | Washer-Flat |

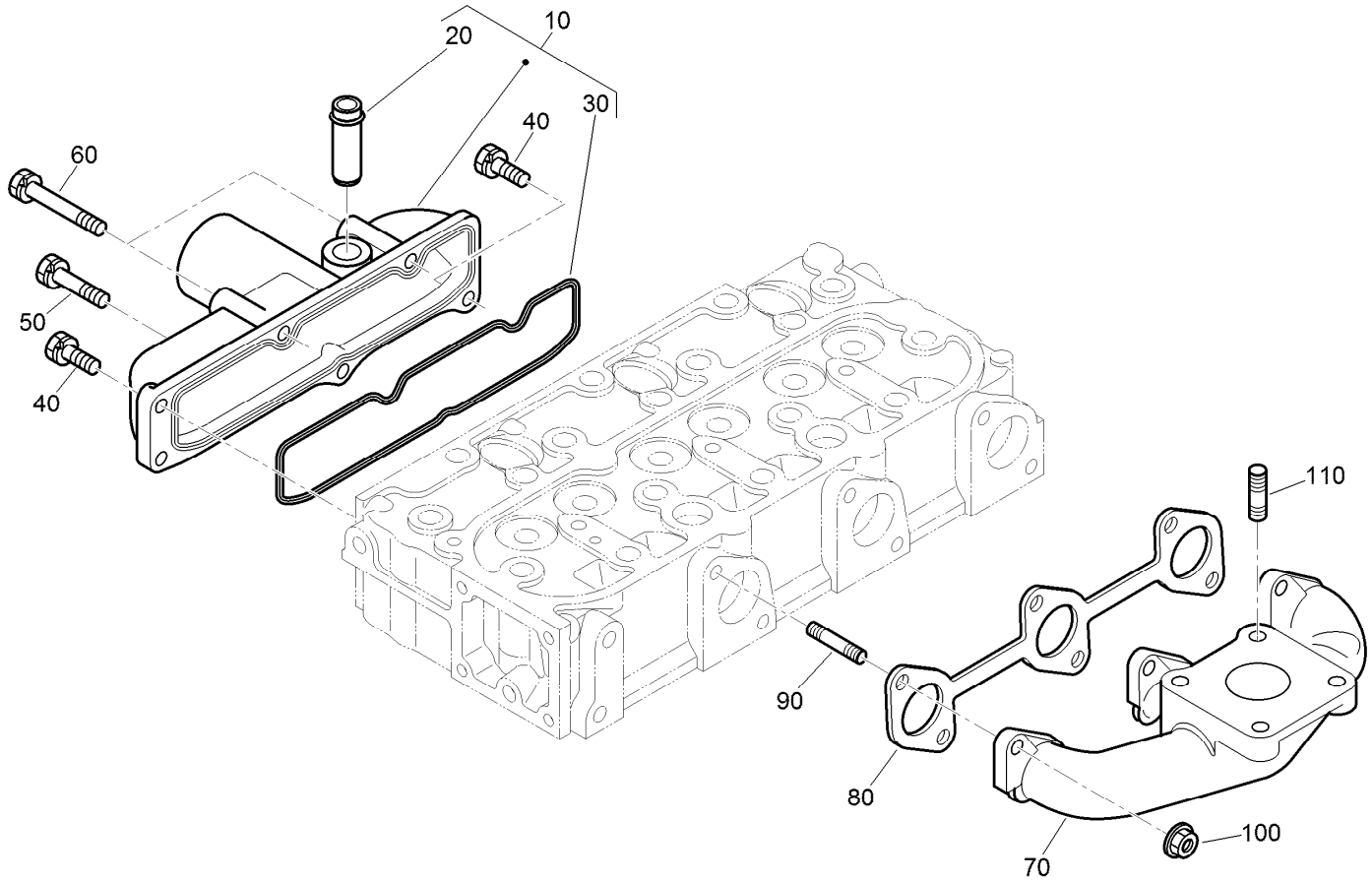


# Inlet and Exhaust Manifold Assembly

| *Ref.* | *Part Number* | *Qty.* | *Description* |
|---|---|---|---|
| 10 | 108-6577 | 1 | Inlet Manifold ASM |
| 20 | 98-9492 | 1 | Joint-Pipe, Breather |
| 30 | 98-9609 | 1 | Gasket-Manifold, Inlet |
| 40 | 127-0403 | 3 | Bolt-Flange |
| 50 | 98-9353 | 1 | Bolt |
| 60 | 125-9063 | 2 | Bolt-Sems |
| 70 | 107-9093 | 1 | Manifold-Exhaust |
| 80 | 99-8327 | 1 | Gasket-Manifold, Exhaust |
| 90 | 98-9588 | 6 | Stud |
| 100 | 98-9665 | 6 | Nut |
| 110 | 98-7769 | 4 | Stud |

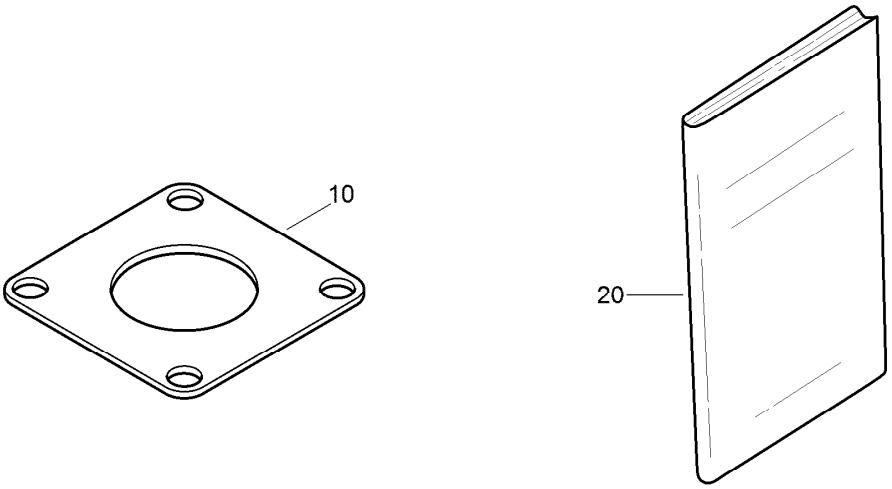


# Miscellaneous Engine Parts

| *Ref.* | *Part Number* | *Qty.* | *Description* |
|---|---|---|---|
| 10 | 99-8343 | 1 | Gasket-Muffler |
| 20 | 130-1543 | 1 | Manual-Operator |

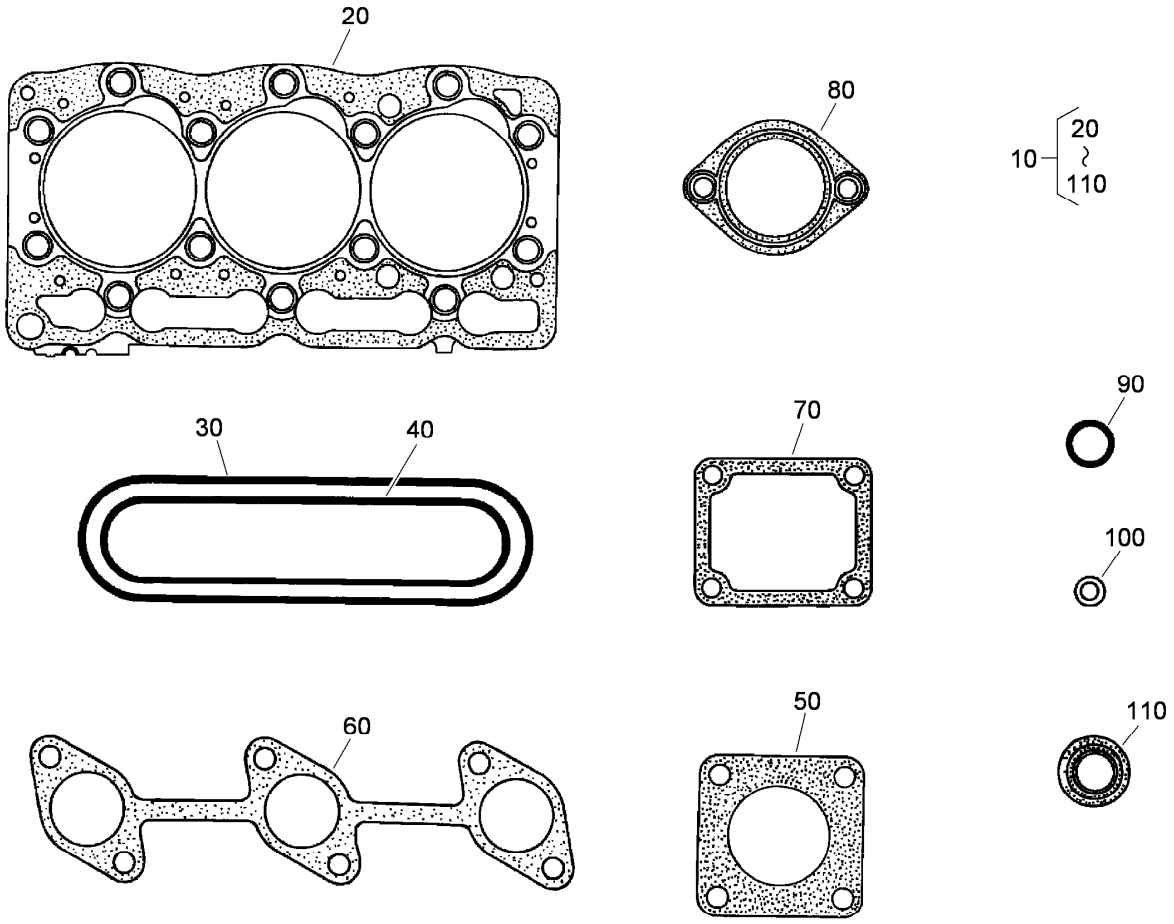


# Upper Gasket Kit

| *Ref.* | *Part Number* | *Qty.* | *Description* |
|---|---|---|---|
| 10 | 107-7848 | 1 | Upper Gasket Kit |
| 20 | 108-6573 | 1 | Gasket-Head, Cylinder |
| 30 | 98-9615 | 1 | Gasket-Cover, Head |
| 40 | 98-9609 | 1 | Gasket-Manifold, Inlet |
| 50 | 99-8343 | 1 | Gasket-Muffler |
| 60 | 99-8327 | 1 | Gasket-Manifold, Exhaust |
| 70 | 98-9638 | 1 | Gasket-Flange, Water |
| 80 | 105-3748 | 1 | Gasket-Thermostat |
| 90 | 99-3446 | 2 | O-Ring |
| 100 | 98-9454 | 3 | Gasket |
| 110 | 99-8385 | 6 | Seal-Stem, Valve |

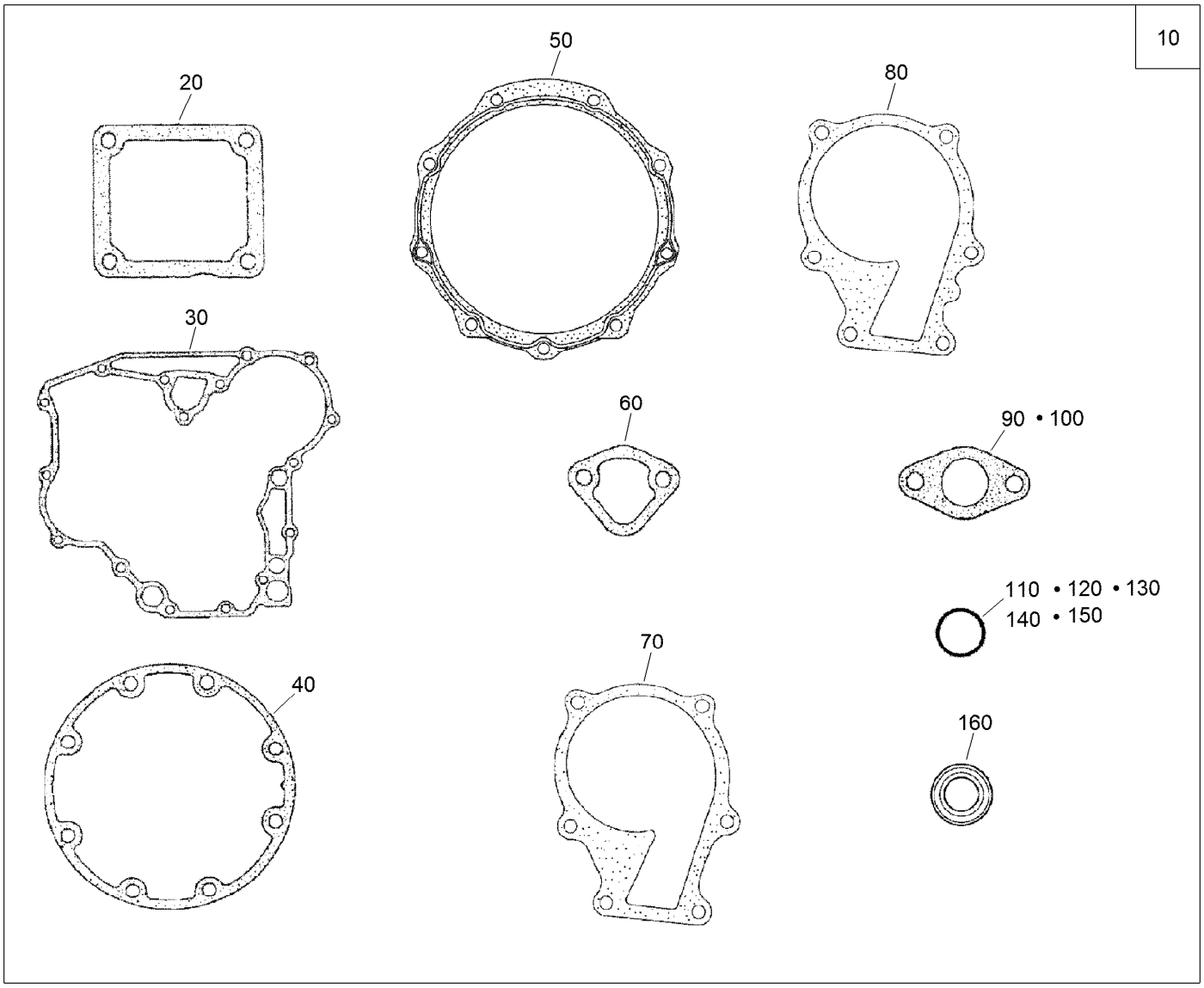


# Lower Engine Gasket Kit

| Ref. | Part Number | Qty. | Description |
|---|---|---|---|
| 10 | 130-1364 | 1 | Lower Gasket Kit |
| 20 | 98-9637 | 1 | Gasket |
| 30 | 98-9633 | 1 | Gasket-Case, Gear |
| 40 | 127-0440 | 1 | Gasket-Case, Bearing |
| 50 | 112-7037 | 1 | Gasket-Cover, Case |
| 60 | 117-7562 | 1 | Gasket-Pump, Fuel |
| 70 | 98-9632 | 1 | Gasket-Pump, Water |
| 80 | 99-3454 | 1 | Gasket-Pump, Water |

| Ref. | Part Number | Qty. | Description |
|---|---|---|---|
| 90 | 98-9682 | 1 | Gasket |
| 100 | 98-9683 | 1 | Gasket-Cover, Solenoid |
| 110 | 105-3781 | 2 | O-Ring |
| 120 | 105-3777 | 2 | O-Ring |
| 130 | 105-3783 | 1 | O-Ring |
| 140 | 105-3776 | 1 | O-Ring |
| 150 | 105-3788 | 1 | O-Ring |
| 160 | 98-7601 | 1 | Seal-Oil |

# Attachments and Accessories

## For 30344 Groundsmaster 3280-D Traction Unit

| Product Name | Model/Part |
|---|---|
| 52 Inch Side Discharge Mower | 30555 |
| 60 Inch Side Discharge Mower | 30366 |
| 62 Inch Base Mower | 30403 |
| 62 Inch Side Discharge Deck | 30551 |
| 72 Inch Side Discharge Mower | 30368 |
| 72 Inch Base Mower | 30404 |
| 62 Inch Blower Kit | 30506 |
| Debris Blower | 30823 |
| 48 Inch V-Plow | 30750 |
| V-Plow Mounting Kit | 115-4917 |
| Tire Chains | 82531 |
| 15 Cubic Foot Bagger Kit | 30356 |
| 52 Inch Blower Kit | 30502 |
| 60 Inch Blower Kit | 30357 |
| Mechanical Seat Suspension Kit | 30312 |
| Pneumatic Seat Suspension Kit | 30313 |
| Standard Seat Kit | 30398 |
| Premium All Purpose Grease (Tube) | 108-1190 |
| Arm Rest Kit | 30707 |
| Armrest Adapter Kit | 108-9687 |
| Premium Engine Oil 10w30 (55 Gal) | 121-6392 |
| Wheel and Tire Assembly | 119-2864 |
| Premium Engine Oil 10w30 (5 Gallon Pail) | 121-6393 |
| Tire | 69-9880 |
| Wheel Weight Kit | 11-0440 |
| Rear Weight Kit | 24-5780 |
| Cab Kit | 30298 |
| 400-Hour Filter Maintenance Kit | 30051 |
| Auxiliary Valve Kit | 120-6640 |
| Auxiliary Power Unit | 30382 |
| Implement Flow Control Kit | 110-5699 |
| Premium Transmission/Hydraulic Tractor Fluid (55 Gallon Drum) | 108-1183 |
| Premium Transmission/Hydraulic Tractor Fluid (5 Gallon Pail) | 108-1184 |
| Premium Engine Oil 15w40 (55 Gallon Drum) | 121-6394 |
| Premium Engine Oil 15w40 (5 Gallon Pail) | 121-6395 |
| Wheel | 119-2863 |
| Tire | 231-95 |
| Hardtop Sunshade | 30359 |
| Bimini Sunshade for 2-Post Roll-Over Protection System | 30358 |
| 5in Air Cleaner Safety Element | 114-4057 |
| Blower Drive and Mounting Kit | 110-8539 |
| Attachment Frame Kit | 110-8540 |
| Snowthrower Drive and Mounting Kit | 114-4140 |
| Mounting Kit (for Model 30823) | 115-4929 |
| Model 2670 Debris Blower Mounting Kit (2XX) | 115-4932 |
| Model 2670 Debris Blower Mounting Kit (3XX) | 115-4935 |

# Attachments and Accessories (continued)

Weight-Wheel ..... 77-6700
Auxiliary Valve Kit ..... 120-6590
CE Kit ..... 31204
Castor Wrench, Groundsmaster Traction Unit ..... 121-3874
Spark Arrestor Screen ..... 75-6880

**Notes:**

TORO®

Count on it.