Form No. 3409-978 Rev A

TORO®

Count on it.

Parts Catalog

# Groundsmaster® 360

## 4-Wheel Drive Multi-Purpose Machine

**Model No. 31200—Serial No. 400000000 and Up**

Register at www.Toro.com.
Original Instructions (EN)

*3409-978* A

# Ordering Replacement Parts

To order replacement parts, please supply the part number, the quantity, and the description of each part desired.

### Understanding Reference Numbers

Each identified part in an illustration has a reference number. The reference number for a part also appears in the parts list, along with other information about the part.

This catalog uses two special reference number formats, one to indicate parts in a service assembly and another to indicate the quantity of a given part in an illustration.

### Service Assembly Reference Numbers

Parts in service assemblies have reference numbers in the form a:b. The a represents the reference number of the entire service assembly and the b represents a sequential number unique to each part within the service assembly.

For example, a wheel assembly might be identified by reference number 6, the tire by 6:1, the valve by 6:2, and the wheel by 6:3. When you order the assembly identified by reference number 6, you receive all parts identified by reference numbers 6:1,6:2, and 6:3. However, you may also order any part individually. Reference numbers of this type appear in illustration and in parts lists.

### Reference Numbers Indicating Quantity

In an illustration, if a reference number indicates more than one part, the reference number has the form nX y. The n represents the quantity of the part, the X is the multiplication symbol, and the y represents the reference number.

For example, in an illustration, the reference number 2X 37 means that two of the parts identified by reference number 37 are indicated.

# Contents


Frame and Rear Axle Assembly . . . 5
Lift Shaft and Linkage Assembly . . . 6
Hydraulic Cylinder Assembly No. 110-9834 . . . 7
Platform and Roll-Over Protection System Assembly . . . 8
Rear Frame Components Assembly . . . 9
4 Wheel Drive Steering Assembly . . . 10
Front Cover Assembly . . . 11
Front Axle and Tie Rod Assembly . . . 12
Front Axle Assembly No. 125-2825 . . . 14
Hydraulic Cylinder Assembly No.125-2835 . . . 15
Rear Steering Assembly . . . 16
Steering Column Assembly . . . 18
Steering Column Assembly No. 117-3371 . . . 19
Steering Valve Assembly No. 130-7948 . . . 20
Fuel Tank and Control Panel Component Assembly . . . 21
Fuel Tank Assembly No. 131-1920 . . . 22
Seat Plate Assembly . . . 23
Seat Assembly . . . 24
Seat Assembly No. 107-2286 . . . 25
Seat Platform Assembly . . . 26
4 Wheel Drive Module Control and Relay Assembly . . . 27
Brake Pedal Assembly . . . 28
Wheel and Brake Assembly . . . 29
Left Hand Brake Assembly No. 120-0235 . . . 30
Right Hand Brake Assembly No. 120-0233 . . . 31
4 Wheel Drive Hydraulic Motor and Fitting Assembly . . . 32
Hydraulic Motor Assembly No. 117-3285 (CW) . . . 33
Hydraulic Motor Assembly No. 117-3284 (CCW) . . . 34
Electrical Assembly . . . 35
Engine Assembly . . . 36
Transmission Component Assembly . . . 37
Charge Pump Housing Assembly Transmission Assembly No. 125-9290 . . . 38
Center Section Assembly Transmission Assembly No. 125-9290 . . . 40
Gear Case and Clutch Assembly Transmission Assembly No. 125-9290 . . . 42
Driveshaft Assembly No. 110-3575 . . . 44
Radiator Component Assembly . . . 45
Radiator and Cooler Assembly . . . 46
Muffler Component Assembly . . . 47
Battery and Fuel Delivery Assembly . . . 48
Air Cleaner Assembly . . . 49
Traction Pedal Assembly . . . 50
Neutral System Assembly . . . 52
Hood Assembly . . . 54
Deck Lift Valve and Hydraulic Fitting Assembly . . . 56
Hydraulic Gear Pump Assembly No. 115-0375 . . . 58
Valve Assembly No. 131-1934 . . . 59
4 Wheel Drive Hydraulic Hose Assembly . . . 60
Hydraulic Valve Assembly . . . 62
Steering Selector Valve Assembly No. 115-0280 . . . 63
Cross-Trax Traction Valve Assembly No. 117-2247 . . . 64
Steering and Traction Hose Assembly . . . 65
Cylinder Block Assembly . . . 66
Gear Housing Assembly . . . 67
Flywheel Housing and Oil Sump Assembly . . . 68



**© 2017—The Toro® Company**


**8111 Lyndale Avenue South**
**Bloomington, MN 55420**





**Contact us at www.Toro.com.**
**Printed in the USA.**


**All Rights Reserved**

# Contents (continued)

Cylinder Head and Cover Assembly . . . . . 70
Suction Manifold Assembly . . . . . 72
Exhaust Manifold Assembly . . . . . 74
Diesel Particulate Filter Assembly . . . . . 76
Camshaft and Driving Gear Assembly . . . . . 78
Crankshaft and Piston Assembly . . . . . 79
Cooling Water System Assembly . . . . . 80
Lubrication and Oil System Assembly . . . . . 82
Fuel System Assembly . . . . . 83
Fuel Injection Valve Assembly . . . . . 84
Fuel Pipe Assembly . . . . . 85
Starting Motor Assembly . . . . . 86
Generator Assembly . . . . . 87
Electronic Control Unit Assembly . . . . . 88
Electric Parts Assembly . . . . . 89
Gasket Set . . . . . 90
Attachments and Accessories . . . . . 92

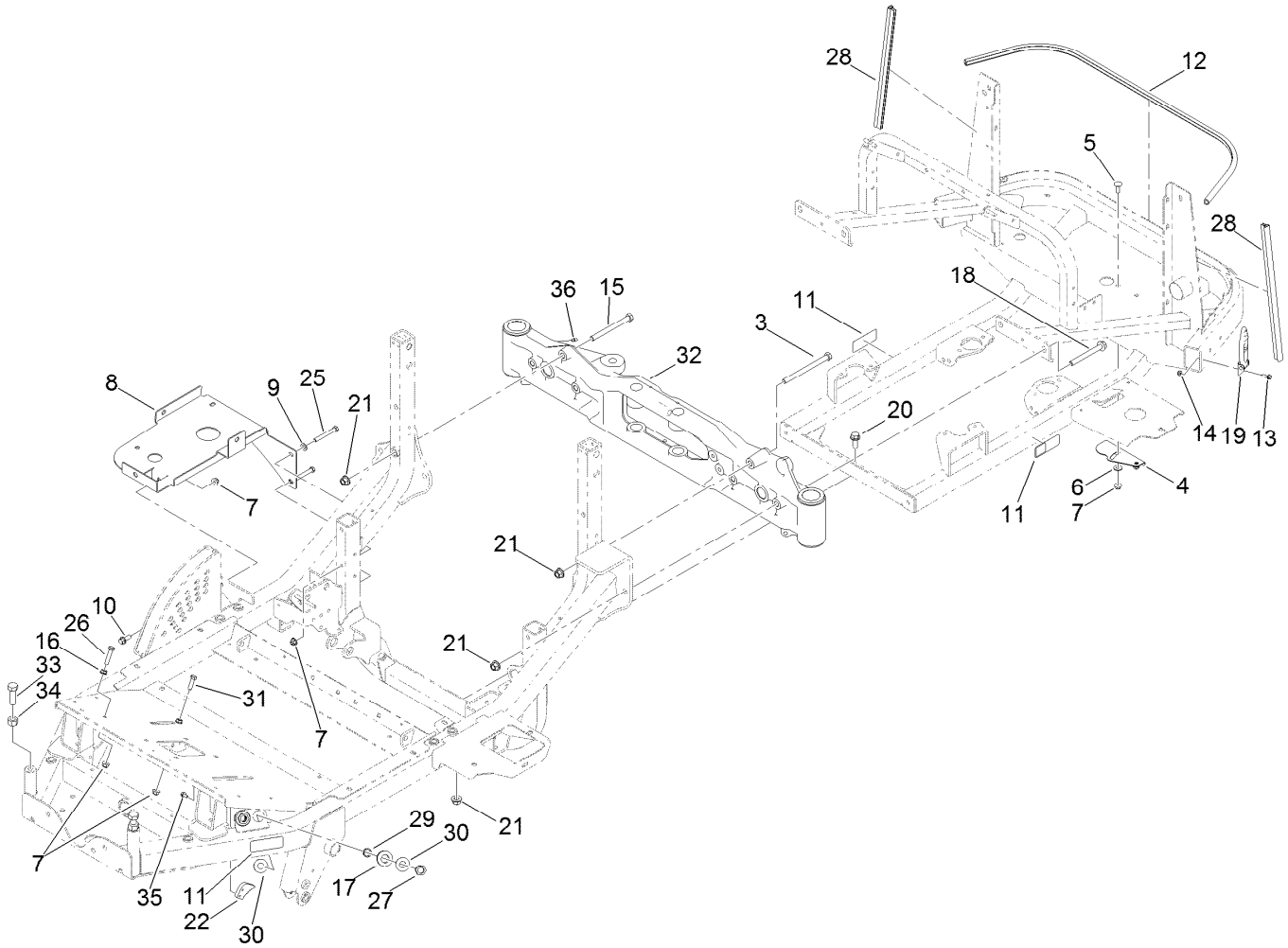


# Frame and Rear Axle Assembly

| Ref. | Part Number | Qty. | Description |
|---|---|---|---|
| 3 | 325-33 | 1 | Screw-HH |
| 4 | 117-3190 | 1 | Cover-Lower |
| 5 | 3231-22 | 2 | Screw-CARR |
| 6 | 66-2920 | 2 | Washer-Friction |
| 7 | 104-8301 | 7 | Nut-Flange, NI |
| 8 | 117-3385-03 | 1 | Bracket-Tank, HYD |
| 9 | 3256-24 | 2 | Washer-Flat |
| 10 | 3234-24 | 1 | Screw-HHF |
| 11 | 106-9206 | 4 | Decal-Torque, Wheel |
| 12 | 117-3311 | 1 | Seal-Bulb |
| 13 | 3234-4 | 2 | Screw-HHF |
| 14 | 104-7201 | 2 | Nut-Flange, NI |
| 15 | 325-22 | 1 | Screw-HH |
| 16 | 3290-357 | 2 | Nut-HHF, Whiz |
| 17 | 240-4 | 2 | Grommet-Rubber |
| 18 | 117-3176 | 4 | Screw-HHF |

| Ref. | Part Number | Qty. | Description |
|---|---|---|---|
| 19 | 103-2898 | 2 | Latch-Rubber |
| 20 | 3234-38 | 3 | Screw-HHF |
| 21 | 99-5107 | 9 | Nut-Lock |
| 22 | 99-7214 | 1 | Pawl-Brake |
| 25 | 323-14 | 2 | Screw-HH |
| 26 | 323-53 | 1 | Screw-HH |
| 27 | 340-70 | 2 | Nut-Lock |
| 28 | 107-2269 | 2 | Seal-Bulb |
| 29 | 69-8970 | 2 | Spacer |
| 30 | 69-8940 | 4 | Washer |
| 31 | 323-7 | 1 | Screw-HH |
| 32 | 131-1931 | 1 | Rear Axle ASM |
| 33 | 327-6 | 2 | Screw-HH |
| 34 | 3217-11 | 2 | Nut-Hex |
| 35 | 3234-13 | 2 | Screw-HHF |
| 36 | 302-5 | 2 | Fitting-Grease |

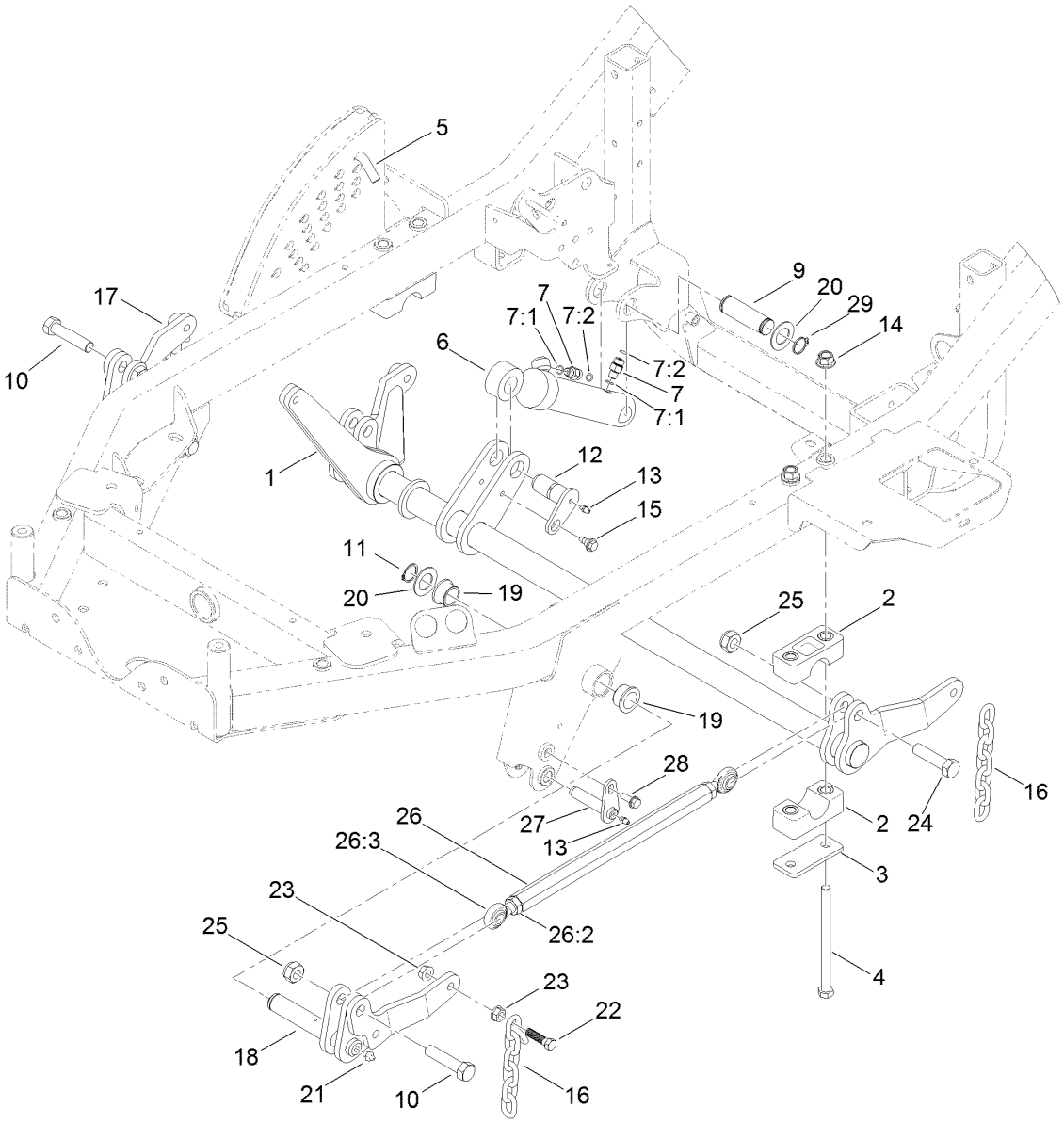


# Lift Shaft and Linkage Assembly

| Ref. | Part Number | Qty. | Description |
|---|---|---|---|
| 1 | 115-0190-03 | 1 | Shaft-Lift |
| 2 | 115-0491 | 4 | Cap-Bearing |
| 3 | 117-2903 | 2 | Plate-Bearing |
| 4 | 325-37 | 4 | Screw-HH |
| 5 | 112-9544 | 1 | Pin-HOC |
| 6 | 110-9834 | 1 | HYD Cylinder ASM |
| 7 | 340-92 | 2 | Fitting-Str |
| 7:1 | 237-78 | 1 | O-Ring |
| 7:2 | 237-21 | 1 | O-Ring |
| 9 | 115-0183 | 1 | Shaft-Cylinder, Lift |
| 10 | 327-8 | 2 | Screw-HH |
| 11 | 32151-29 | 2 | Ring-Retaining |
| 12 | 125-1910 | 1 | Pin-Pivot |
| 13 | 302-5 | 3 | Fitting-Grease |
| 14 | 99-5107 | 4 | Nut-Lock |
| 15 | 99-5105 | 1 | Bolt-Shoulder |

| Ref. | Part Number | Qty. | Description |
|---|---|---|---|
| 16 | 119-1385 | 4 | Chain-HOC |
| 17 | 119-1380-03 | 1 | Lift-RH |
| 18 | 119-1383-03 | 1 | Lift-LH |
| 19 | 114-5680 | 4 | Bushing-Flange |
| 20 | 69-9010 | 4 | Washer |
| 21 | 302-2 | 2 | Fitting-Grease |
| 22 | 103-1898 | 4 | Screw-HH |
| 23 | 32128-37 | 8 | Nut-HF |
| 24 | 327-7 | 2 | Screw-HH |
| 25 | 3296-61 | 4 | Nut-Lock |
| 26 | 114-4059 | 2 | Link ASM |
| 26:2 | 3220-6 | 2 | Nut-Jam |
| 26:3 | 1-633029 | 2 | Balljoint-Spherical |
| 27 | 112-1602 | 2 | Pin-Retainer |
| 28 | 32144-41 | 2 | Screw-Taptite |
| 29 | 32151-36 | 2 | Ring-Retaining |

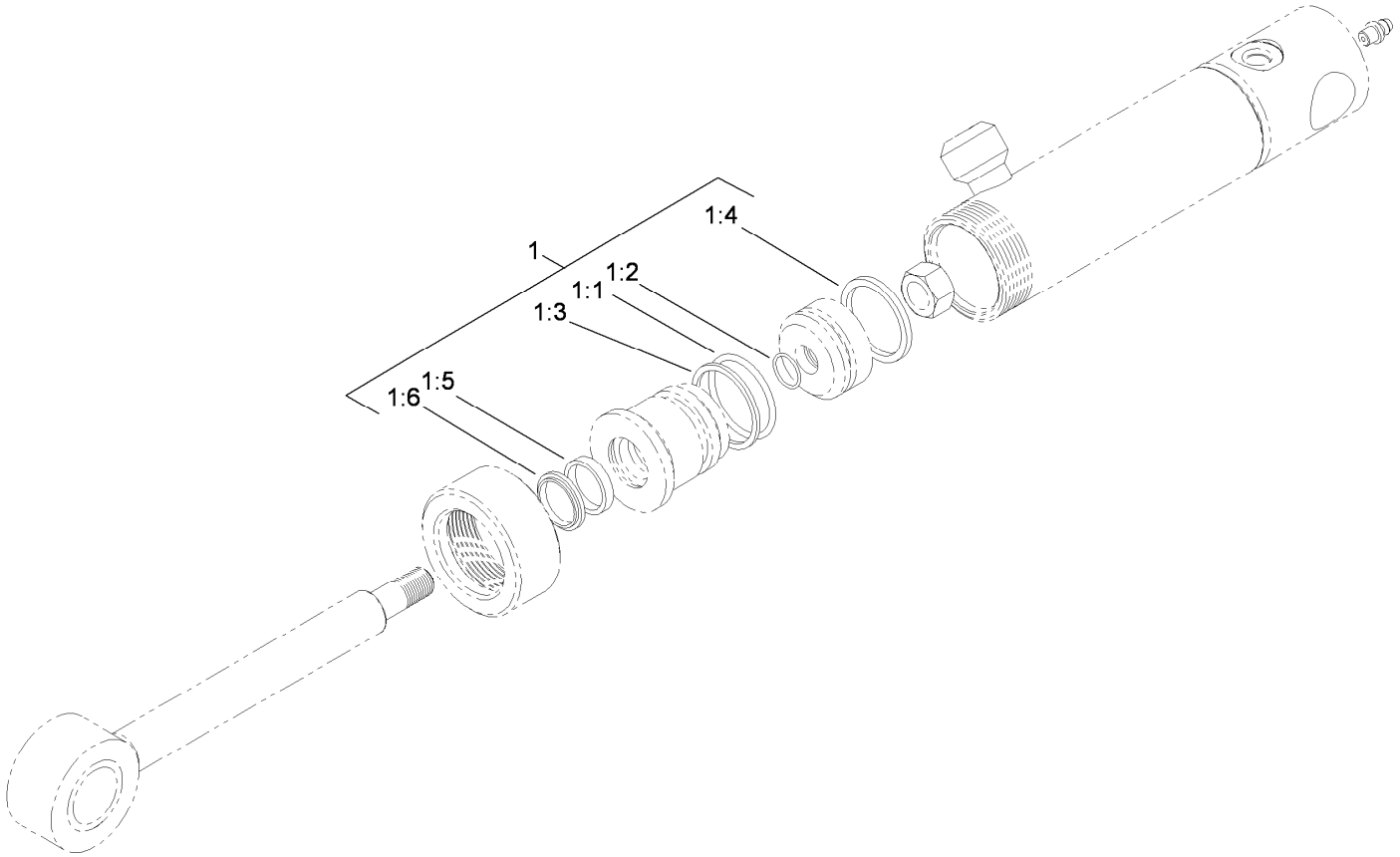


# Hydraulic Cylinder Assembly No. 110-9834

| *Ref.* | *Part Number* | *Qty.* | *Description* |
|---|---|---|---|
| 1 | 112-6353 | 1 | Seal Kit |
| 1:1 | | 1 | O-Ring ● |
| 1:2 | | 1 | O-Ring ● |
| 1:3 | | 1 | Backup ● |
| 1:4 | | 1 | Seal-Bp ● |
| 1:5 | | 1 | Seal-Rod ● |
| 1:6 | | 1 | Seal-Dust ● |

● Not serviced separately

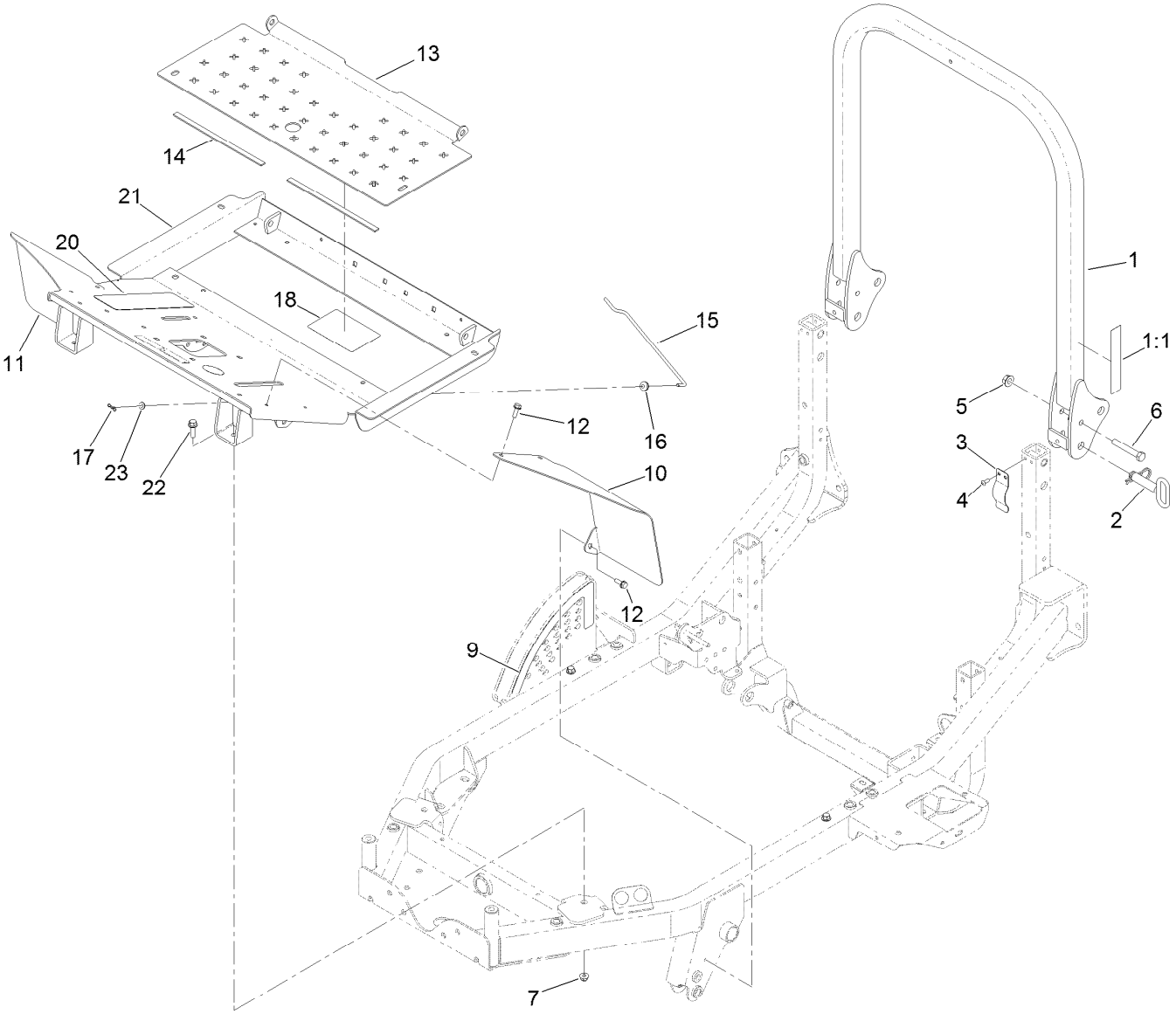


# Platform and Roll-Over Protection System Assembly

| Ref. | Part Number | Qty. | Description |
|---|---|---|---|
| 1 | 127-6520 | 1 | ROPS ASM |
| 1:1 | 117-3272 | 1 | Decal-Danger, ROPS |
| 2 | 103-4553 | 2 | Pin-Fold, ROPS |
| 3 | 110-5696 | 2 | Spring-Leaf |
| 4 | 3290-412 | 4 | Rivet |
| 5 | 32128-23 | 2 | Nut-HF |
| 6 | 112-7264 | 2 | Screw-HH |
| 7 | 104-8301 | 2 | Nut-Flange, NI |
| 9 | 132-6552 | 1 | Decal-HOC |
| 10 | 117-3203-03 | 1 | Fender-Front, LH |
| 11 | 117-3202-03 | 1 | Fender-Front, RH |

| Ref. | Part Number | Qty. | Description |
|---|---|---|---|
| 12 | 32144-41 | 6 | Screw-Taptite |
| 13 | 117-3204-03 | 1 | Plate-Floor |
| 14 | 115-8827 | 2 | Foam-Strip |
| 15 | 110-9847 | 1 | Rod-Prop |
| 16 | 237-141 | 1 | Grommet-Rubber |
| 17 | 119-1414 | 1 | Pin-Cotter, Locking |
| 18 | 112-1461 | 1 | Decal-Routing, Belt |
| 20 | 71-0440 | 1 | Abrasive-Pedal |
| 21 | 119-1398-01 | 1 | Platform |
| 22 | 3234-24 | 4 | Screw-HHF |
| 23 | 3256-22 | 1 | Washer-Flat |

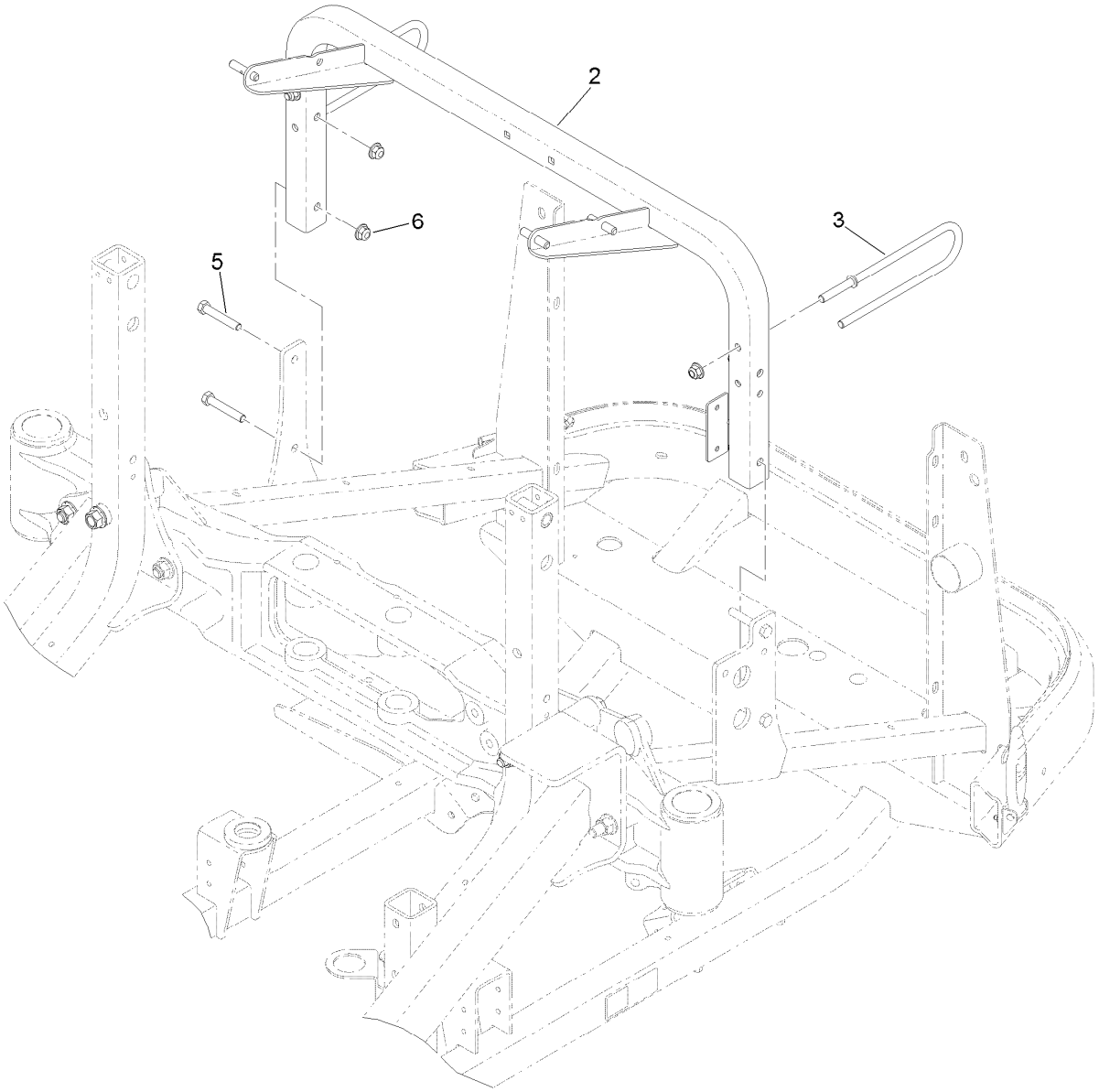


# Rear Frame Components Assembly

| *Ref.* | *Part Number* | *Qty.* | *Description* |
|---|---|---|---|
| 2 | 125-9202-03 | 1 | Tube-Cross |
| 3 | 127-4853 | 2 | Guide-Hose |
| 5 | 323-45 | 4 | Screw-HH |
| 6 | 104-8301 | 6 | Nut-Flange, NI |

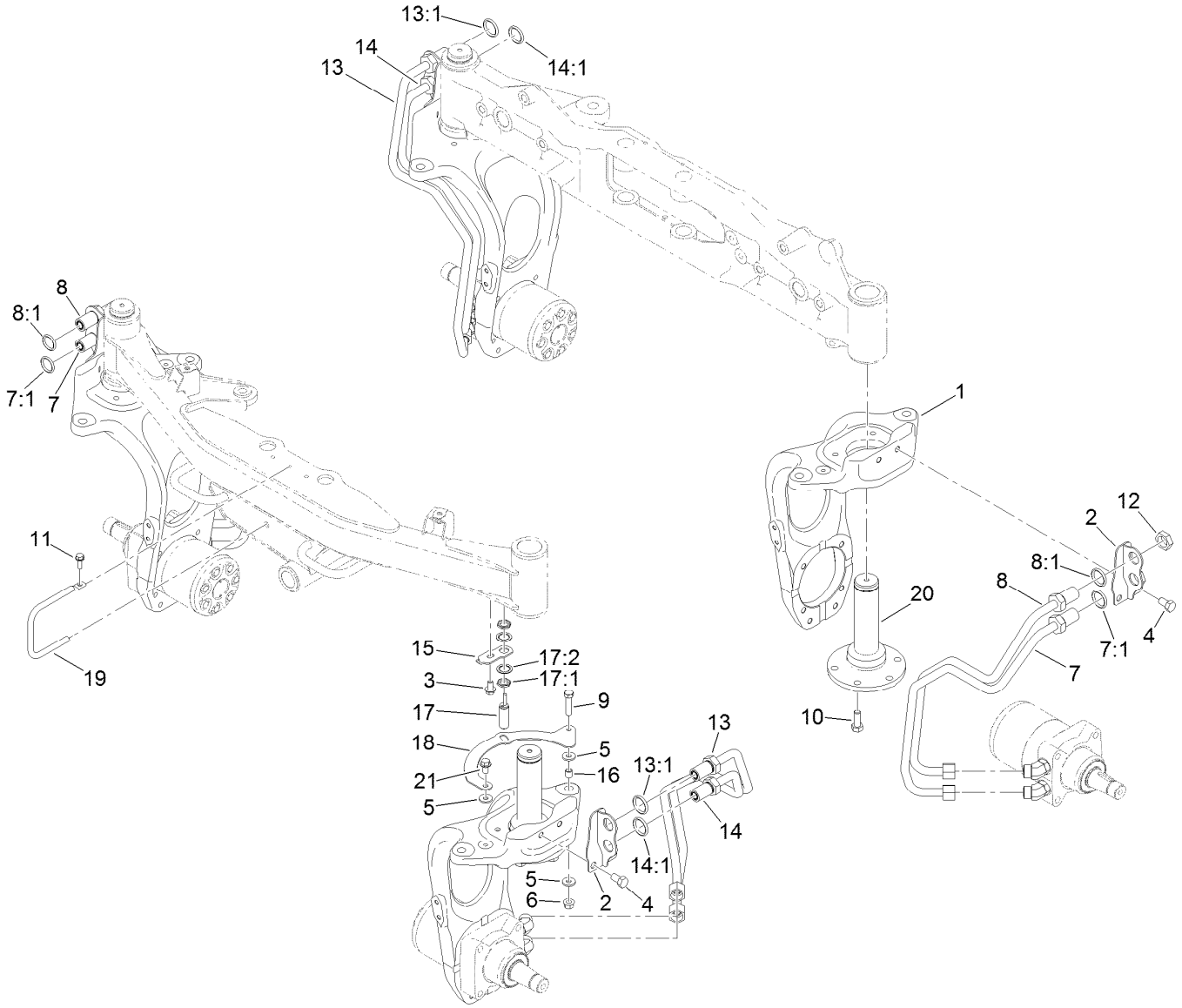


# 4 Wheel Drive Steering Assembly

| Ref. | Part Number | Qty. | Description |
|---|---|---|---|
| 1 | 117-2951 | 4 | Base-Fork, Steer |
| 2 | 132-6556-03 | 4 | Bracket-Bulkhead |
| 3 | 110-9380 | 1 | Screw-HWH |
| 4 | 325-3 | 8 | Screw-HH |
| 5 | 5-0838 | 3 | Washer |
| 6 | 32128-21 | 1 | Nut-HF |
| 7 | 117-2948 | 2 | Upper Tube ASM |
| 7:1 | 237-65 | 1 | O-Ring |
| 8 | 117-2949 | 2 | Lower Tube ASM |
| 8:1 | 237-65 | 1 | O-Ring |
| 9 | 323-8 | 1 | Screw-HH |
| 10 | 117-3266 | 20 | Screw-HH |
| 11 | 32144-41 | 1 | Screw-Taptite |
| 12 | 340-74 | 8 | Nut-Lock, Bulkhead |

| Ref. | Part Number | Qty. | Description |
|---|---|---|---|
| 13 | 117-2946 | 2 | Upper Tube ASM |
| 13:1 | 237-65 | 1 | O-Ring |
| 14 | 117-2947 | 2 | Lower Tube ASM |
| 14:1 | 237-65 | 1 | O-Ring |
| 15 | 119-1413 | 1 | Bracket-Sensor |
| 16 | 103-1166 | 1 | Spacer-Tube, Pump Link |
| 17 | 115-5300 | 1 | Proximity Switch ASM |
| 17:1 | 117-3207 | 2 | Nut-Hex |
| 17:2 | 117-3208 | 2 | Washer-Lock, Internal Tooth |
| 18 | 117-2216-03 | 1 | Bracket-Target |
| 19 | 117-3178 | 1 | Rod-Guide |
| 20 | 117-3361 | 4 | Spindle-Steer |
| 21 | 3234-47 | 1 | Screw-HHF |

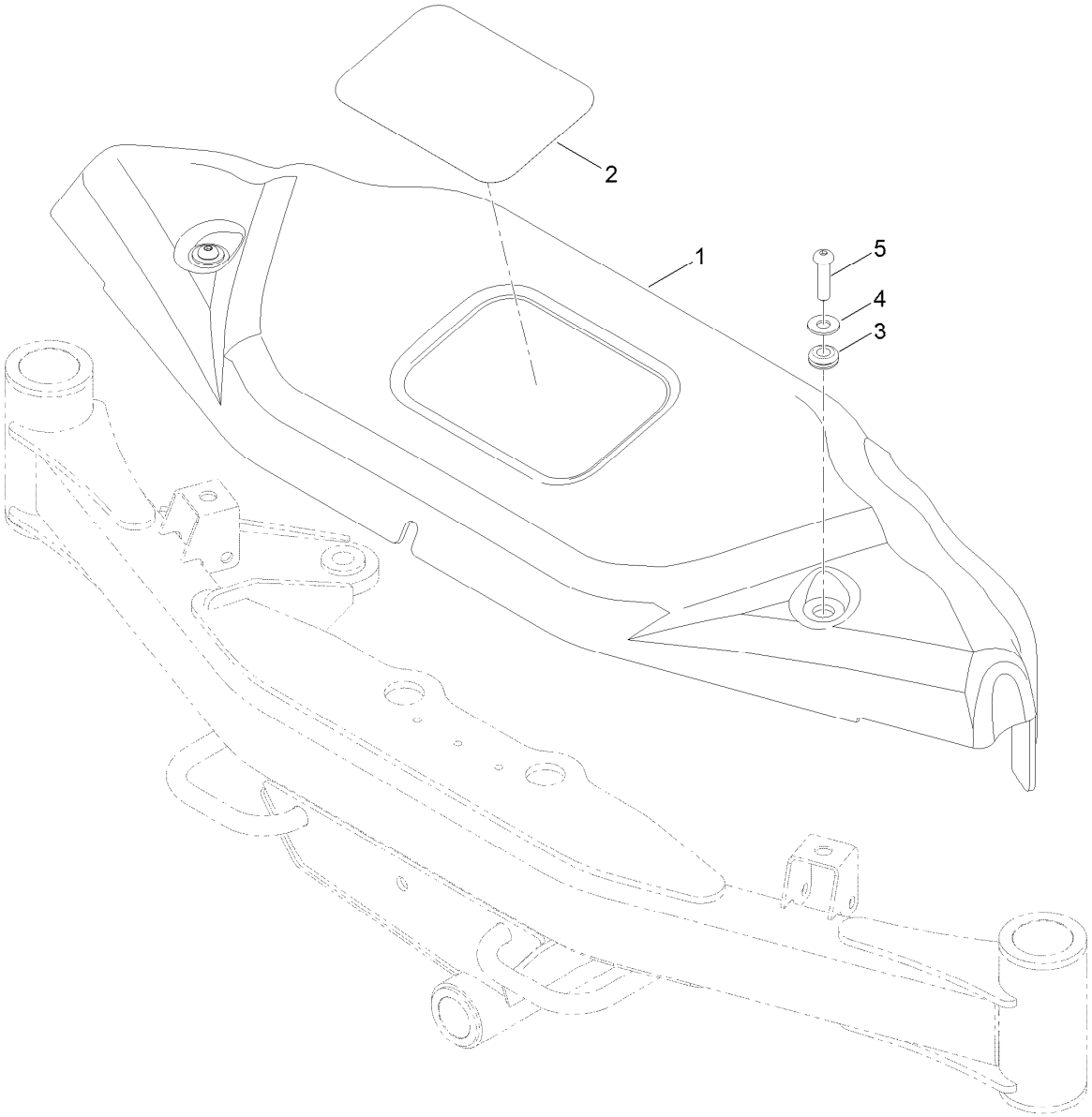


# Front Cover Assembly

| Ref. | Part Number | Qty. | Description |
|---|---|---|---|
| 1 | 125-2828 | 1 | Cover-Front |
| 2 | 104-7213 | 1 | Decal |
| 3 | 1-633630 | 2 | Grommet |
| 4 | 100-7403 | 2 | Washer-Flat |
| 5 | 95-3857 | 2 | Screw-HSBH |

# Front Axle and Tie Rod Assembly

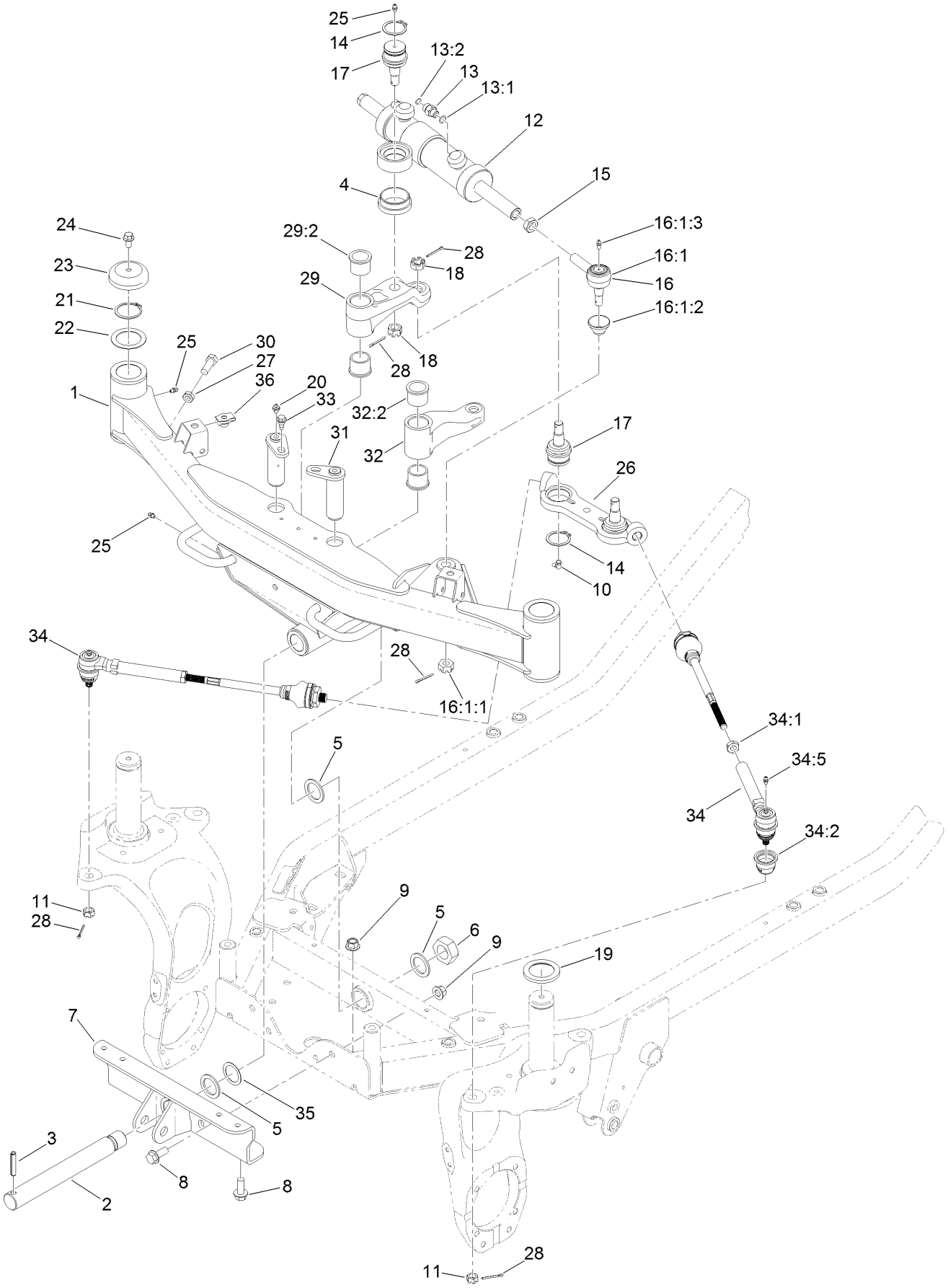

# Front Axle and Tie Rod Assembly (continued)

| Ref. | Part Number | Qty. | Description |
|---|---|---|---|
| 1 | 125-2825 | 1 | Front Axle ASM |
| 2 | 119-1376 | 1 | Shaft-Pivot |
| 3 | 32121-110 | 1 | Pin-Roll, Slotted |
| 4 | 120-0238 | 1 | Spacer-Cylinder |
| 5 | 98-1452 | 3 | Washer-Thrust |
| 6 | 3296-68 | 1 | Nut-Lock, NI |
| 7 | 117-2920-03 | 1 | Support-Axle |
| 8 | 3234-38 | 6 | Screw-HHF |
| 9 | 99-5107 | 6 | Nut-Lock |
| 10 | 302-60 | 2 | Fitting-Grease |
| 11 | 32136-3 | 2 | Nut-SHH |
| 12 | 125-2835 | 1 | HYD Cylinder ASM |
| 13 | 340-2 | 2 | Fitting-Str |
| 13:1 | 237-22 | 1 | O-Ring |
| 13:2 | 237-42 | 1 | O-Ring |
| 14 | 32151-104 | 3 | Ring-Retaining, External |
| 15 | 84-5300 | 1 | Nut-Jam |
| 16 | 71-4740-03 | 1 | RH Tie Rod End ASM |
| 16:1 | | 1 | End-Rod, Tie (RH) ●■ |
| 16:1:1 | 105-7941 | 1 | Nut-Hex, Slotted ● |
| 16:1:2 | 105-7835 | 1 | Seal ● |
| 16:1:3 | 302-5 | 1 | Fitting-Grease |
| 17 | 106-6774 | 3 | Joint-Ball |
| 18 | 32136-2 | 3 | Nut-SHH |
| 19 | 100-2508 | 2 | Washer-Thrust |
| 20 | 302-2 | 2 | Fitting-Grease |
| 21 | 100-4196 | 2 | Ring-Retaining |
| 22 | 115-0169 | 2 | Washer-Thrust |
| 23 | 100-3362 | 2 | Cap-Spindle |
| 24 | 3234-12 | 2 | Screw-HHF |
| 25 | 302-5 | 4 | Fitting-Grease |
| 26 | 117-2986 | 1 | Centerlink |
| 27 | 3218-5 | 2 | Nut-Jam |
| 28 | 3272-12 | 6 | Pin-Cotter |
| 29 | 120-0391 | 1 | Front LH Arm ASM |
| 29:2 | 94-8947 | 2 | Bushing-Flange |
| 30 | 325-6 | 2 | Screw-HH |
| 31 | 117-3167 | 2 | Front Pin ASM |
| 32 | 120-0390 | 1 | Front RH Arm ASM |
| 32:2 | 94-8947 | 2 | Bushing-Flange |
| 33 | 99-5105 | 2 | Bolt-Shoulder |
| 34 | 117-2983 | 2 | Rod-Tie, Front |
| 34:1 | 42-9650 | 1 | Nut-Hex, Jam |
| 34:2 | 117-3287 | 1 | Dust Boot |
| 34:5 | 302-5 | 1 | Fitting-Grease |
| 35 | 93-4628 | 1 | Washer |
| 36 | 105-4886 | 2 | Nut-Tinnerman |

● Not illustrated

■ Not serviced separately

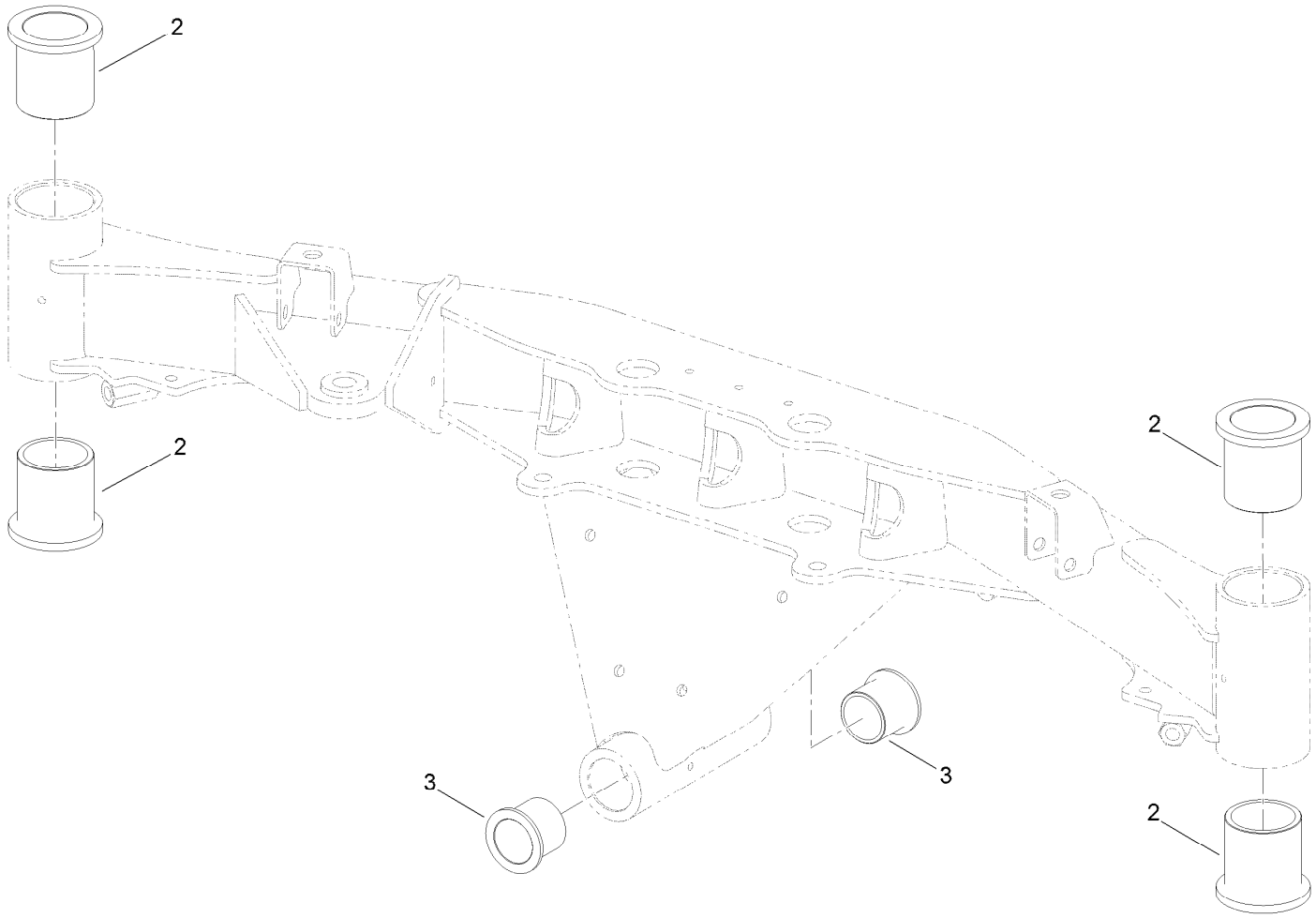


# Front Axle Assembly No. 125-2825

| *Ref.* | *Part Number* | *Qty.* | *Description* |
|---|---|---|---|
| 2 | 125-4386 | 4 | Bushing-Castor |
| 3 | 69-6470 | 2 | Bushing-Castor |

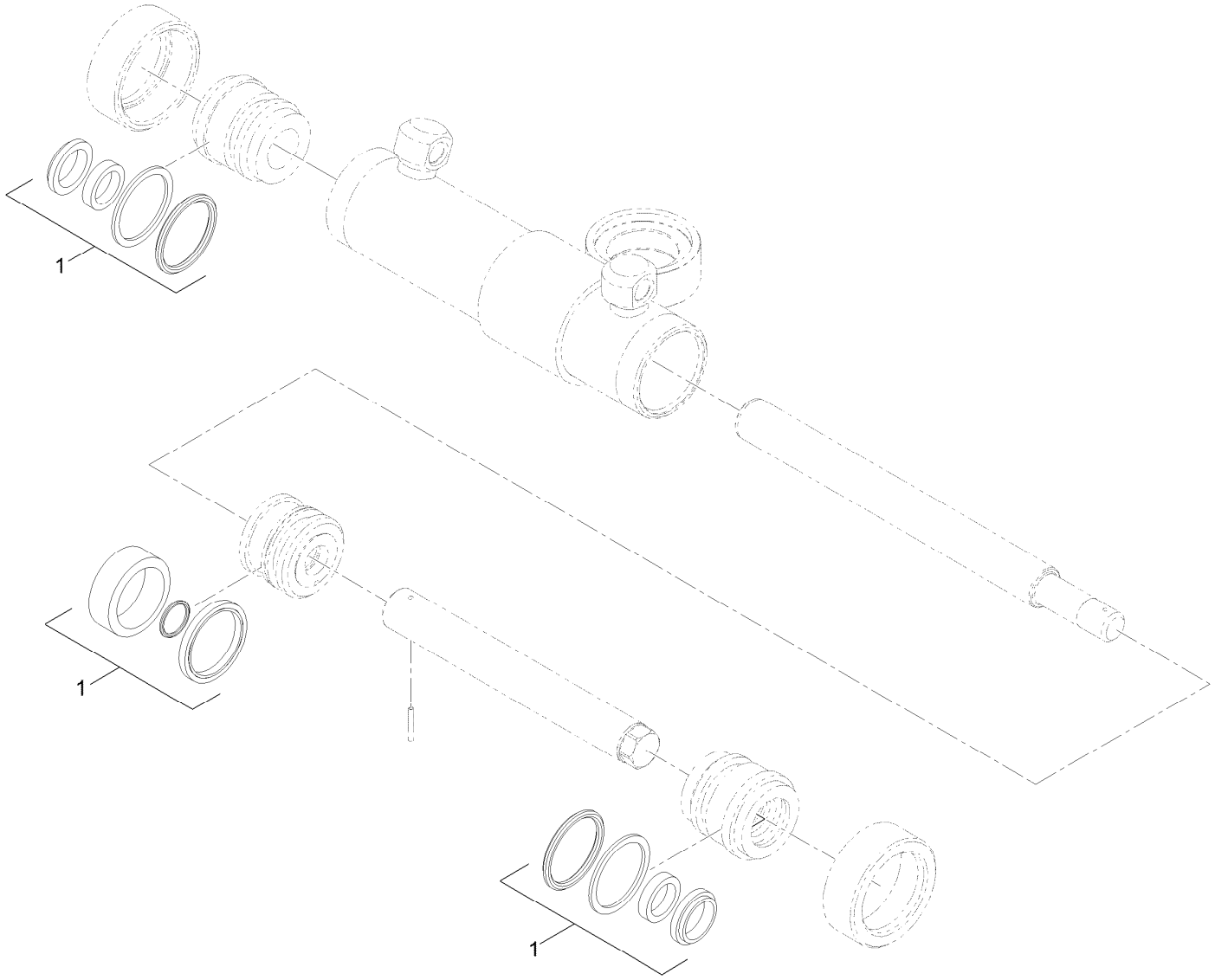


# Hydraulic Cylinder Assembly No.125-2835

| *Ref.* | *Part Number* | *Qty.* | *Description* |
|---|---|---|---|
| 1 | 120-2557 | 1 | Seal Kit |

# Rear Steering Assembly

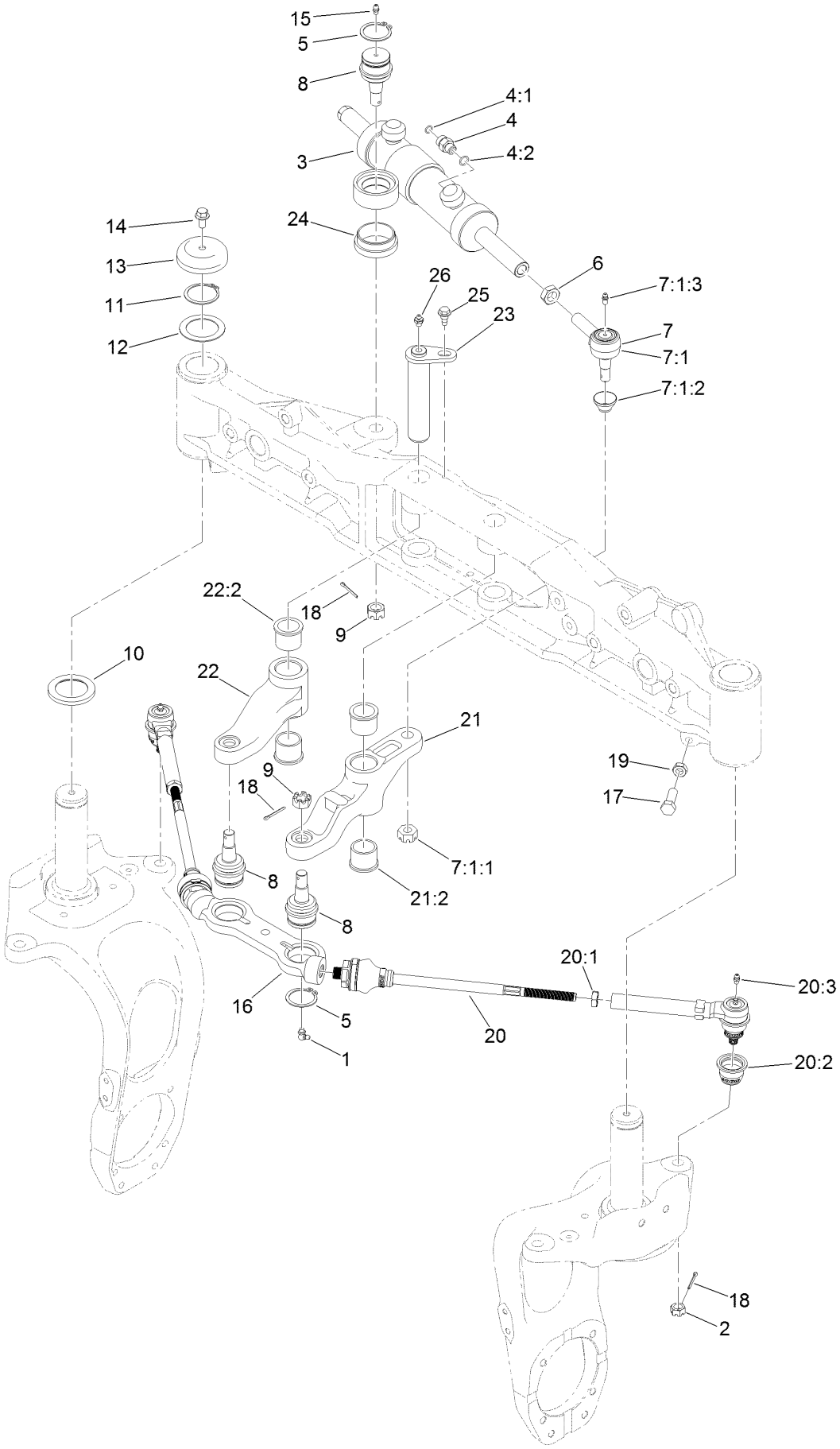

# Rear Steering Assembly (continued)

| Ref. | Part Number | Qty. | Description |
|---|---|---|---|
| 1 | 302-60 | 2 | Fitting-Grease |
| 2 | 32136-3 | 2 | Nut-SHH |
| 3 | 125-2835 | 1 | HYD Cylinder ASM |
| 4 | 340-2 | 2 | Fitting-Str |
| 4:1 | 237-22 | 1 | O-Ring |
| 4:2 | 237-42 | 1 | O-Ring |
| 5 | 32151-104 | 3 | Ring-Retaining, External |
| 6 | 84-5300 | 1 | Nut-Jam |
| 7 | 71-4740-03 | 1 | RH Tie Rod End ASM |
| 7:1 | | 1 | End-Rod, Tie (RH) ●■ |
| 7:1:1 | 105-7941 | 1 | Nut-Hex, Slotted ● |
| 7:1:2 | 105-7835 | 1 | Seal ● |
| 7:1:3 | 302-5 | 1 | Fitting-Grease |
| 8 | 106-6774 | 3 | Joint-Ball |
| 9 | 32136-2 | 3 | Nut-SHH |
| 10 | 100-2508 | 2 | Washer-Thrust |
| 11 | 100-4196 | 2 | Ring-Retaining |
| 12 | 115-0169 | 2 | Washer-Thrust |
| 13 | 100-3362 | 2 | Cap-Spindle |
| 14 | 3234-12 | 2 | Screw-HHF |
| 15 | 302-5 | 1 | Fitting-Grease |
| 16 | 117-2986 | 1 | Centerlink |
| 17 | 325-6 | 2 | Screw-HH |
| 18 | 3272-12 | 6 | Pin-Cotter |
| 19 | 3218-5 | 2 | Nut-Jam |
| 20 | 117-2984 | 2 | Rod-Tie, Rear |
| 20:1 | 42-9650 | 1 | Nut-Hex, Jam |
| 20:2 | 117-3287 | 1 | Dust Boot |
| 20:3 | 302-5 | 1 | Fitting-Grease |
| 21 | 125-2832 | 1 | Rear LH Arm ASM |
| 21:2 | 94-8947 | 2 | Bushing-Flange |
| 22 | 120-0392 | 1 | Rear RH Arm ASM |
| 22:2 | 94-8947 | 2 | Bushing-Flange |
| 23 | 117-3137 | 2 | Pin ASM |
| 24 | 120-0238 | 1 | Spacer-Cylinder |
| 25 | 99-5105 | 2 | Bolt-Shoulder |
| 26 | 302-2 | 2 | Fitting-Grease |

● Not illustrated

■ Not serviced separately

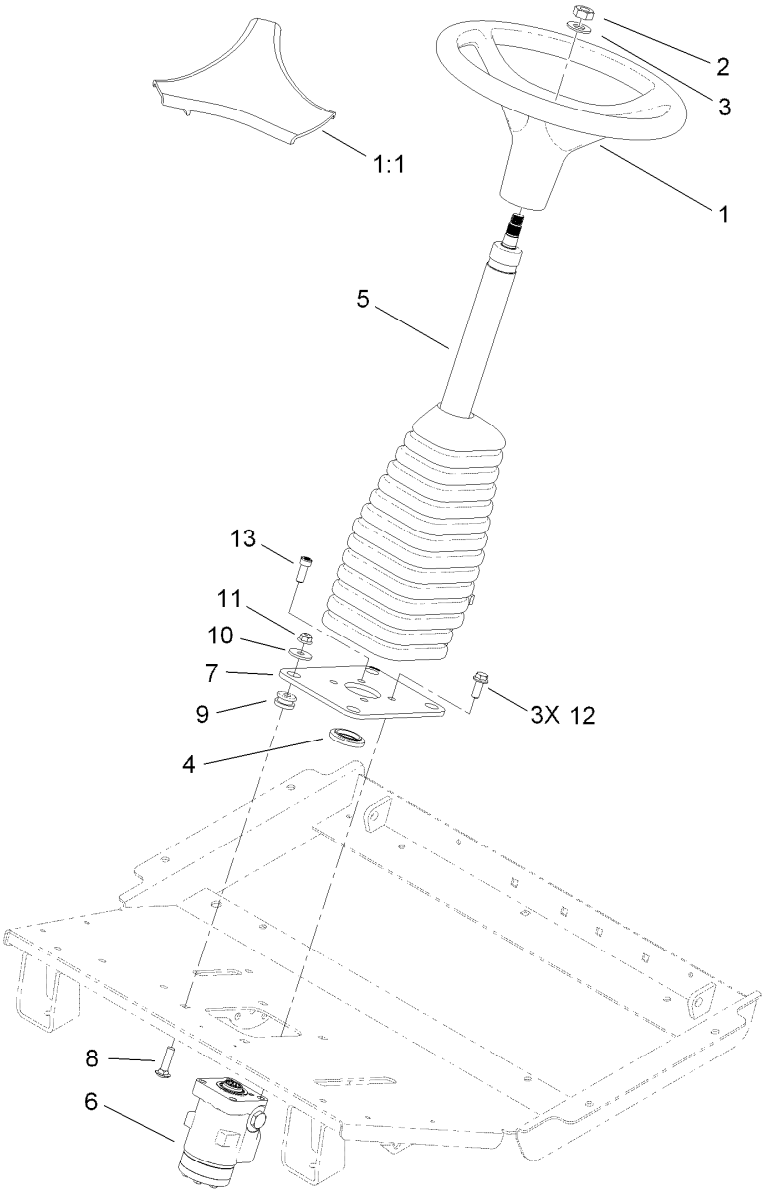


# Steering Column Assembly

| Ref. | Part Number | Qty. | Description |
|---|---|---|---|
| 1 | 98-1471 | 1 | Wheel-Steering |
| 1:1 | 98-1468 | 1 | Cover-Wheel, Steering |
| 2 | 3296-33 | 1 | Nut-Lock, NI |
| 3 | 3256-27 | 1 | Washer-Flat |
| 4 | 117-3373 | 1 | Bushing-Alignment |
| 5 | 117-3371 | 1 | Column-Steering |
| 6 | 130-7948 | 1 | Valve-Control, Steering |
| 7 | 117-3234-03 | 1 | Plate-Steering |
| 8 | 3231-26 | 4 | Screw-CARR |
| 9 | 63-9750 | 4 | Mount |
| 10 | 63-8410 | 4 | Washer |
| 11 | 104-8301 | 4 | Nut-Flange, NI |
| 12 | 108-1531 | 3 | Screw-HHF |
| 13 | 3273-41 | 1 | Screw-HSH |

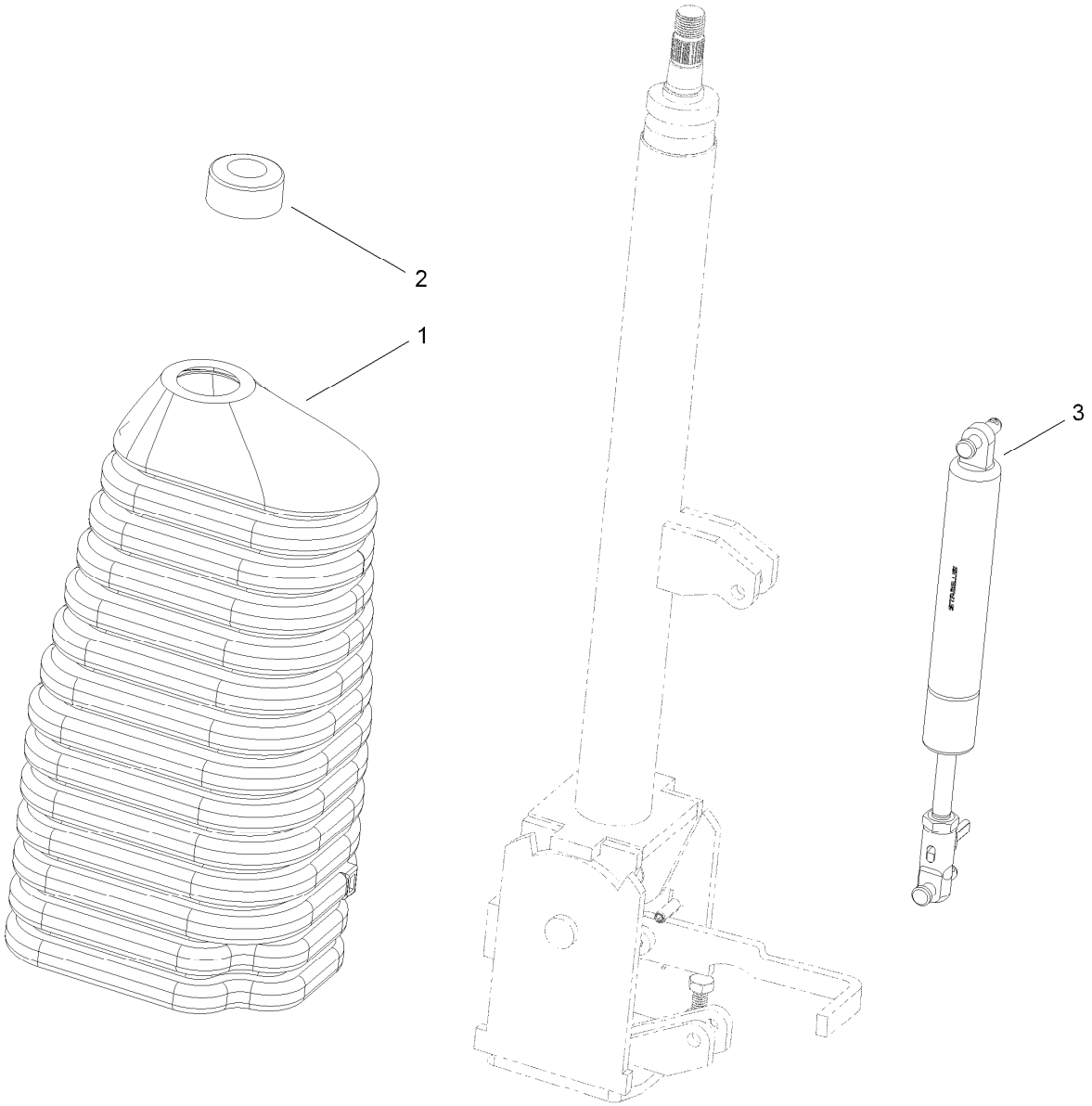


# Steering Column Assembly No. 117-3371

| *Ref.* | *Part Number* | *Qty.* | *Description* |
|---|---|---|---|
| 1 | 120-2592 | 1 | Boot-Rubber, Column |
| 2 | 120-2593 | 1 | Boot-Rubber, Bearing |
| 3 | 120-2594 | 1 | Gas Spring ASM |

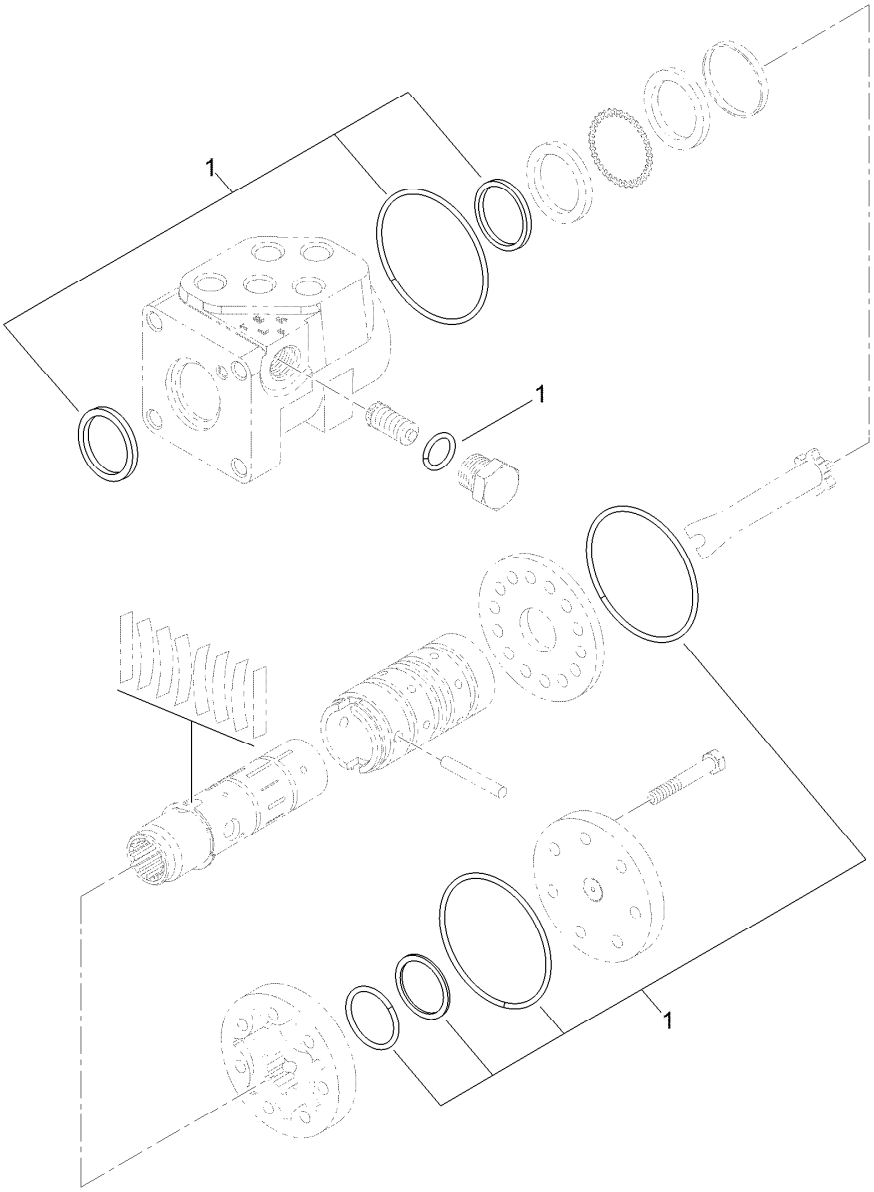


# Steering Valve Assembly No. 130-7948

| *Ref.* | *Part Number* | *Qty.* | *Description* |
|---|---|---|---|
| 1 | 130-8357 | 1 | Seal Kit |

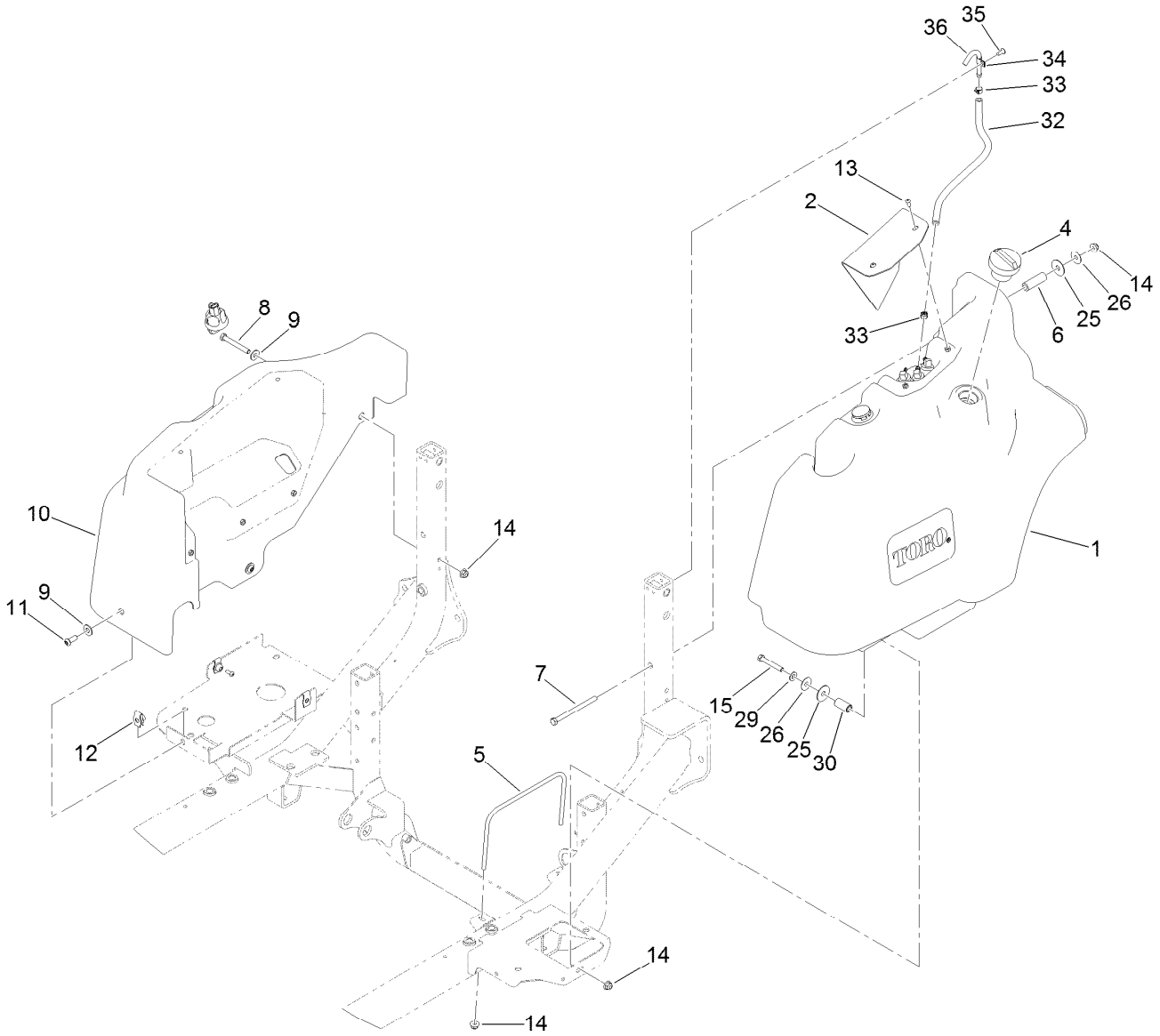


# Fuel Tank and Control Panel Component Assembly

| Ref. | Part Number | Qty. | Description |
|---|---|---|---|
| 1 | 131-1920 | 1 | Fuel Tank ASM |
| 2 | 117-3359-03 | 1 | Plate-Cover |
| 4 | 125-9170 | 1 | Cap-Fuel, Diesel (Ultra Low Sulfur) |
| 5 | 117-3394 | 1 | Bracket-Tank |
| 6 | 117-3387 | 1 | Tube-Spacer |
| 7 | 323-39 | 1 | Screw-HH |
| 8 | 323-14 | 1 | Screw-HH |
| 9 | 100-7403 | 4 | Washer-Flat |
| 10 | 132-6550 | 1 | Cover-Tank, Hydraulic |
| 11 | 3274-94 | 3 | Screw-HSBH |
| 12 | 105-4886 | 3 | Nut-Tinnerman |
| 13 | 3274-31 | 2 | Screw-HSBH |
| 14 | 104-8301 | 5 | Nut-Flange, NI |
| 15 | 323-12 | 1 | Screw-HH |
| 25 | 95-1905 | 2 | Washer-Rubber |
| 26 | 105-6814 | 2 | Washer-Plain |
| 29 | 3256-24 | 1 | Washer-Flat |
| 30 | 110-3726 | 1 | Spacer |
| 32 | 110-4101 | 1 | Hose-Fuel |
| 33 | 92-2379 | 2 | Clamp-Hose |
| 34 | 2412-89 | 1 | Clamp-R |
| 35 | 3290-412 | 1 | Rivet |
| 36 | 120-6820 | 1 | Tube-Vent |

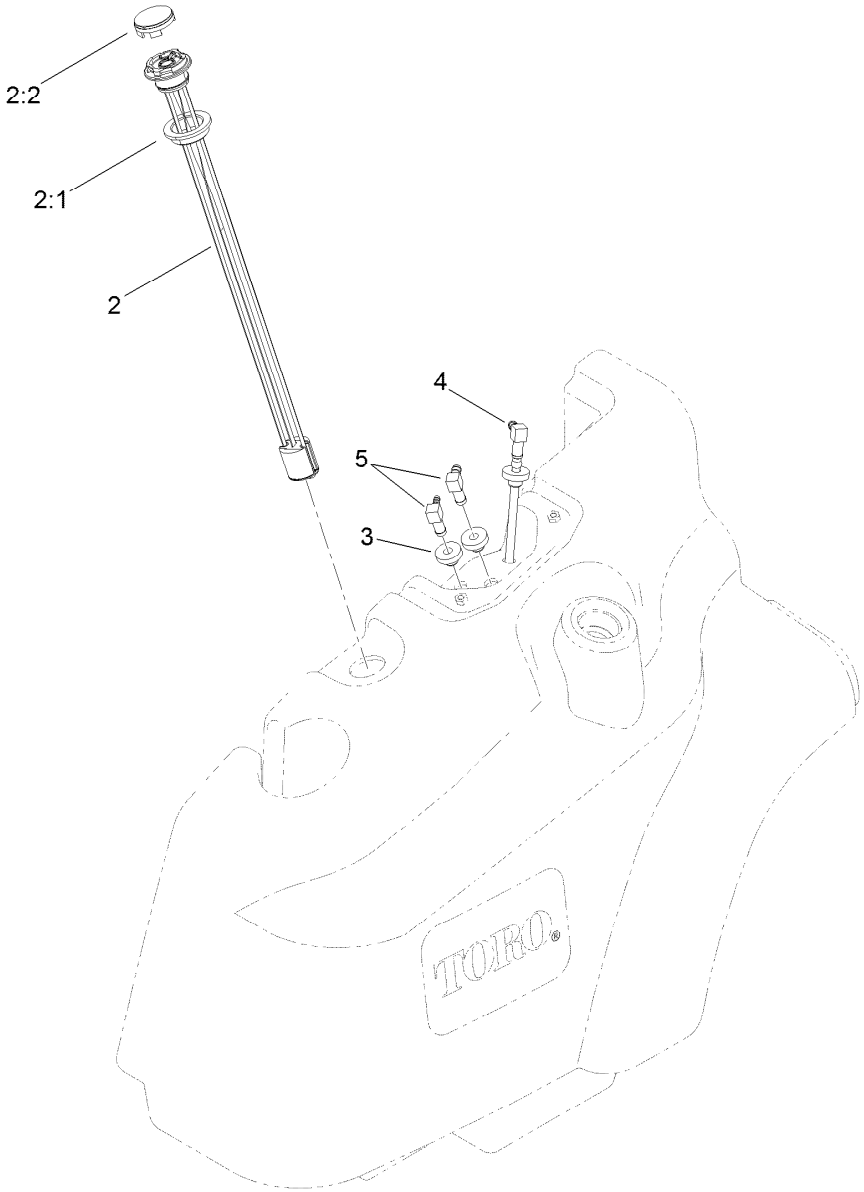


# Fuel Tank Assembly No. 131-1920

| Ref. | Part Number | Qty. | Description |
|---|---|---|---|
| 2 | 117-3238 | 1 | Gauge-Fuel |
| 2:1 | 119-0508 | 1 | Seal |
| 2:2 | 117-8404 | 1 | Dial-Gauge |
| 3 | 46-6560 | 3 | Bushing |
| 4 | 117-3370 | 1 | Pipe-Stand |
| 5 | 46-6550 | 2 | Fitting-Elbow, 90 DEG |

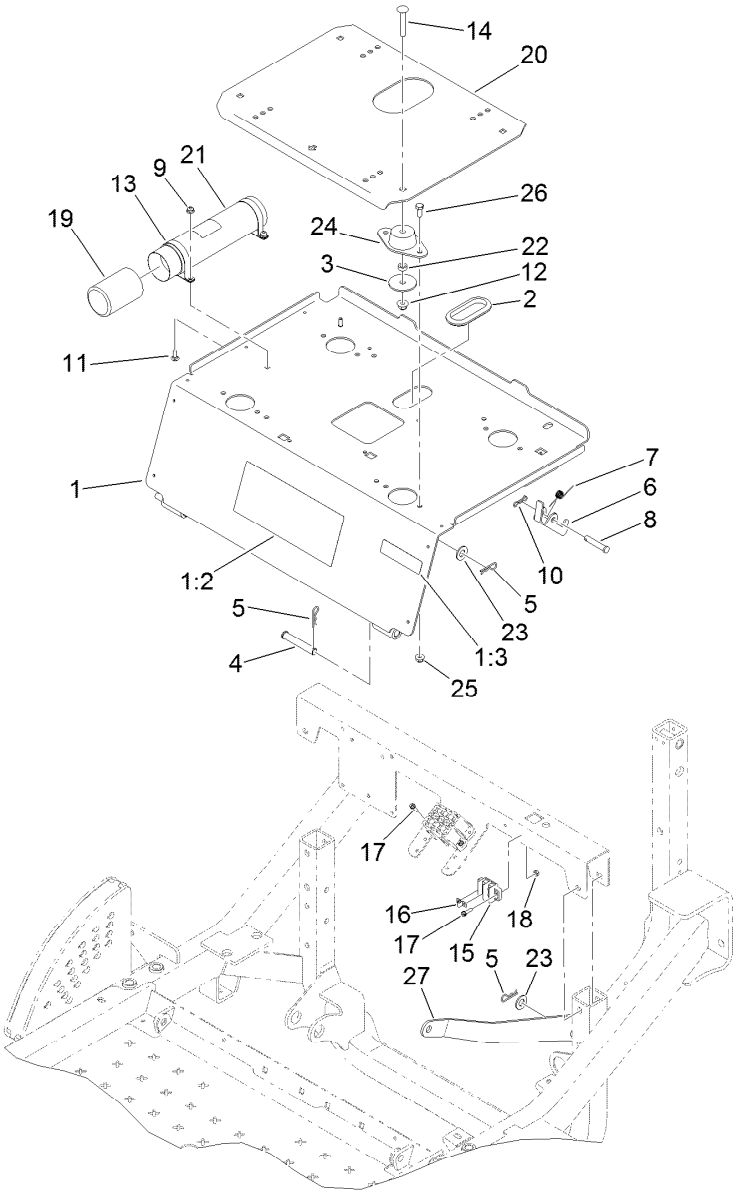


# Seat Plate Assembly

| Ref. | Part Number | Qty. | Description |
|---|---|---|---|
| 1 | 120-0244 | 1 | Seat Plate ASM |
| 1:2 | 117-3273 | 1 | Decal-Operation, Warning |
| 1:3 | 117-2718 | 1 | Decal-Arrester, Spark |
| 2 | 237-164 | 1 | Grommet |
| 3 | 83-1040 | 4 | Washer-Flat |
| 4 | 283-55 | 2 | Pin-Clevis |
| 5 | 3290-467 | 4 | Pin-Hair |
| 6 | 117-3067 | 1 | Latch-Seat |
| 7 | 104-4821 | 1 | Spring-Torsion |
| 8 | 283-82 | 1 | Pin-Clevis |
| 9 | 104-7201 | 2 | Nut-Flange, NI |
| 10 | 119-1415 | 1 | Pin-Cotter, Locking |
| 11 | 3229-1 | 2 | Bolt-CARR |
| 12 | 104-8301 | 4 | Nut-Flange, NI |
| 13 | 107-1865 | 2 | R-Clamp |

| Ref. | Part Number | Qty. | Description |
|---|---|---|---|
| 14 | 3231-40 | 4 | Bolt-CARR, Short Neck |
| 15 | 42862 | 1 | Block-Terminal, Ground |
| 16 | 42863 | 1 | Strip-Jumper |
| 17 | 32105-13 | 2 | Screw-HWH |
| 18 | 3296-2 | 2 | Nut-Lock, NI |
| 19 | 104-7048 | 1 | Cap-Housing |
| 20 | 117-3065-03 | 1 | Plate-Seat |
| 21 | 104-7050 | 1 | Tube-Manual |
| 22 | 83-1050 | 4 | Spacer |
| 23 | 3256-26 | 2 | Washer-Flat |
| 24 | 121-9076 | 4 | Mount-Engine |
| 25 | 104-8300 | 8 | Nut-Flange, NI |
| 26 | 322-3 | 8 | Screw-HH |
| 27 | 120-0242-01 | 1 | Strap-Prop |

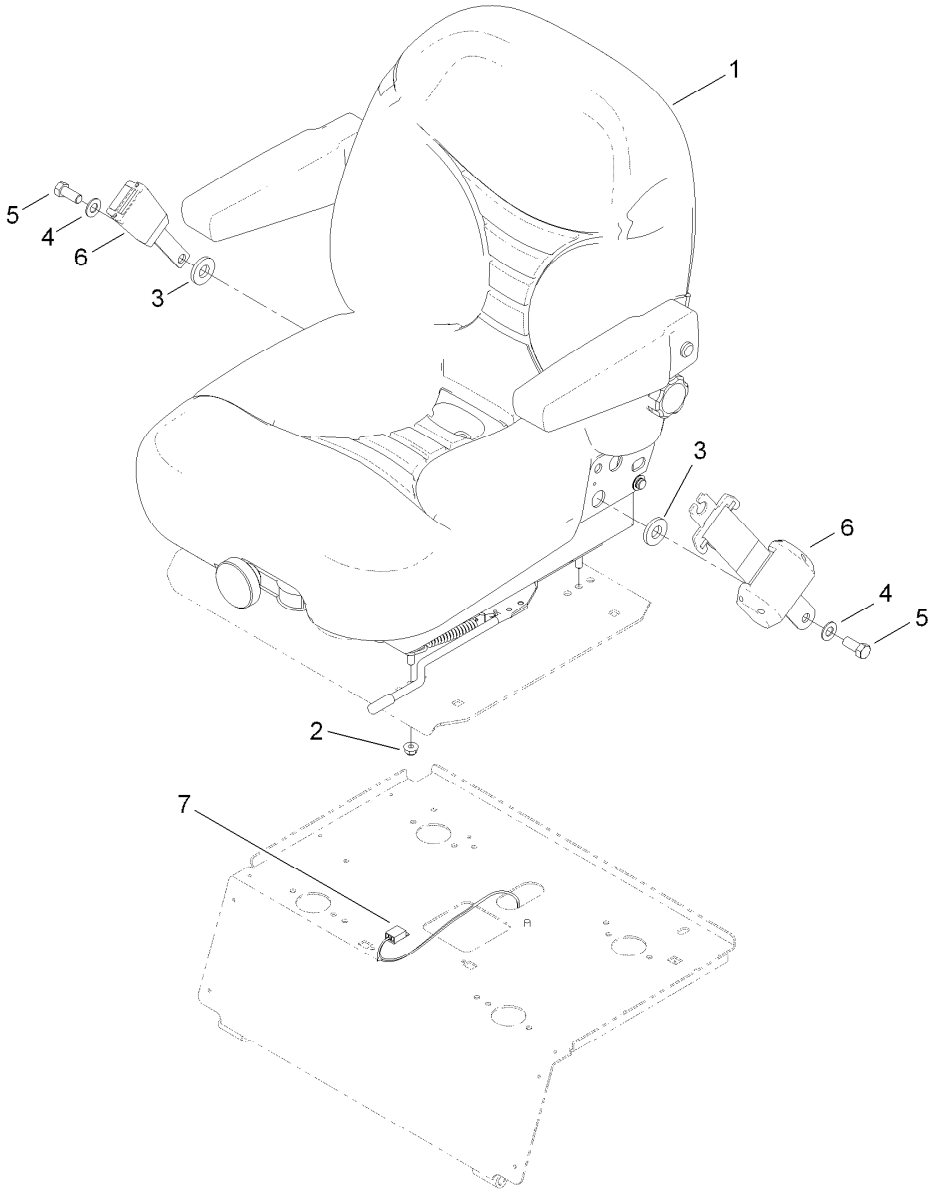


# Seat Assembly

| Ref. | Part Number | Qty. | Description |
|---|---|---|---|
| 1 | 107-2286 | 1 | Seat |
| 2 | 104-8300 | 4 | Nut-Flange, NI |
| 3 | 99-7667 | 2 | Washer-Flat |
| 4 | 3256-25 | 2 | Washer-Flat |
| 5 | 3212-4 | 2 | Screw-HH |
| 6 | 110-0413 | 1 | Seatbelt-Retractable |
| 7 | 119-5786 | 1 | Harness-Wire |

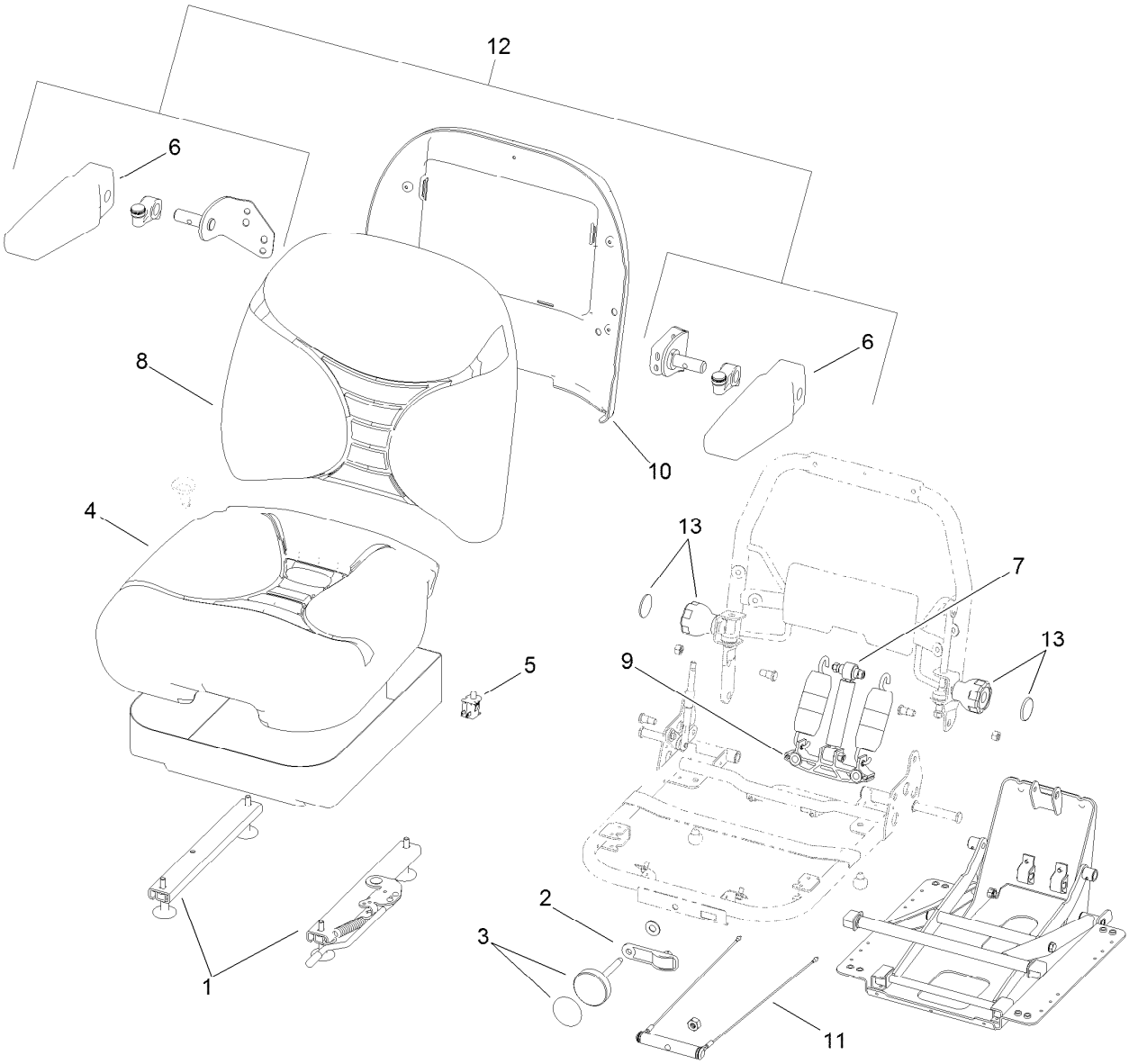


# Seat Assembly No. 107-2286

| Ref. | Part Number | Qty. | Description |
|---|---|---|---|
| 1 | 107-1880 | 1 | Seat Track Kit |
| 2 | 107-1885 | 1 | Weight Indicator Kit |
| 3 | 121-9431 | 1 | Knob Kit |
| 4 | 107-1883 | 1 | Bottom Cushion Kit |
| 5 | 82-2190 | 1 | Switch-Bail |
| 6 | 107-1887 | 2 | Pad-Armrest |
| 7 | 107-1884 | 1 | Shock Absorber Kit |
| 8 | 107-1882 | 1 | Back Cushion Kit |
| 9 | 109-3343 | 1 | Spring And Saddle Kit |
| 10 | 109-3344 | 1 | Back Panel Kit |
| 11 | 109-3345 | 1 | Weight Adjust Kit |
| 12 | 121-9415 | 1 | Armrest Kit |
| 13 | 121-9432 | 2 | Adjust Knob Kit |

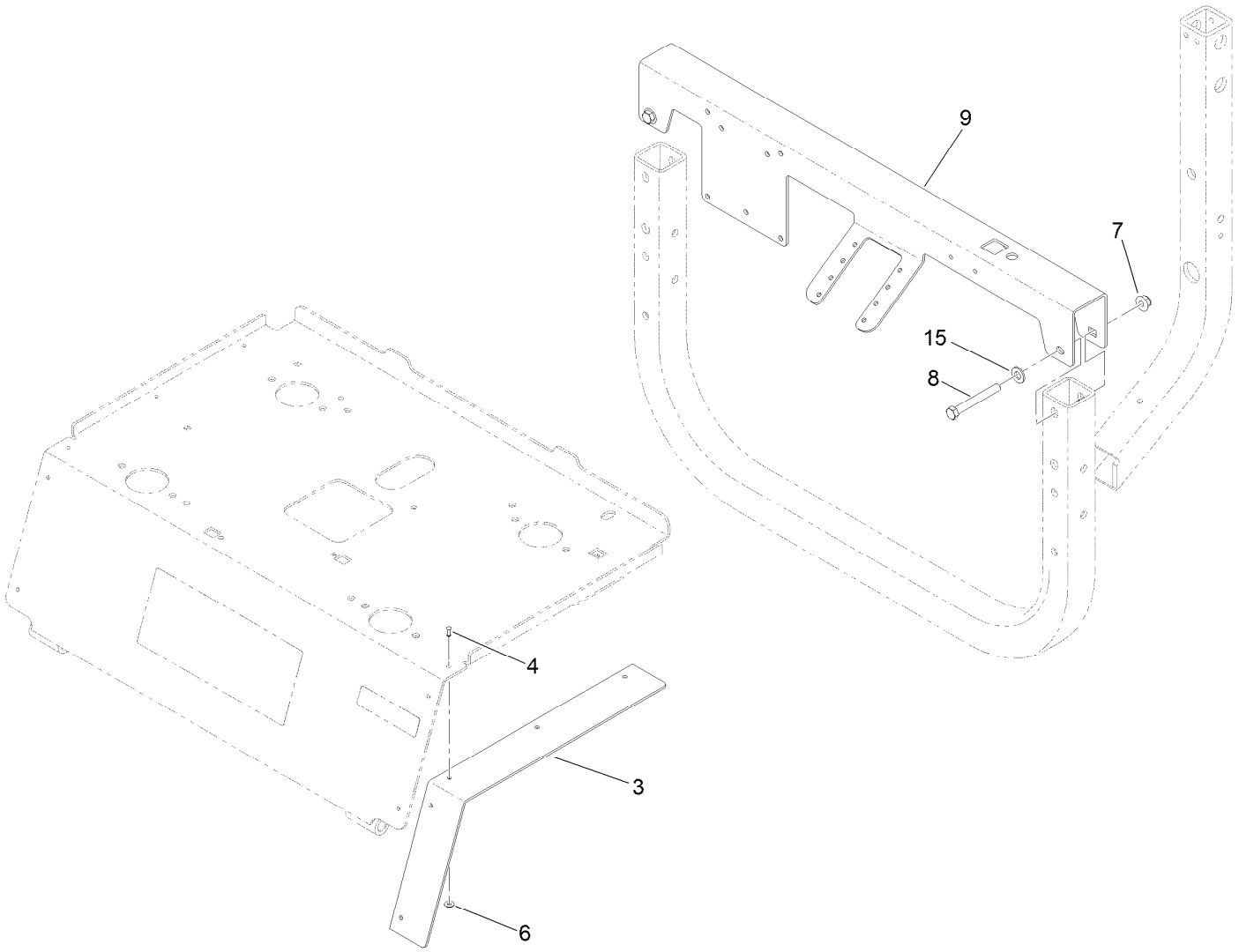


# Seat Platform Assembly

| Ref. | Part Number | Qty. | Description |
|---|---|---|---|
| 3 | 117-3175 | 2 | Strap-Filler |
| 4 | 3290-282 | 10 | Rivet-Blind |
| 6 | 3269-26 | 10 | Washer-Plain |
| 7 | 104-8301 | 2 | Nut-Flange, NI |
| 8 | 323-14 | 2 | Screw-HH |
| 9 | 125-4361-03 | 1 | Channel-Seat |
| 15 | 3256-24 | 2 | Washer-Flat |

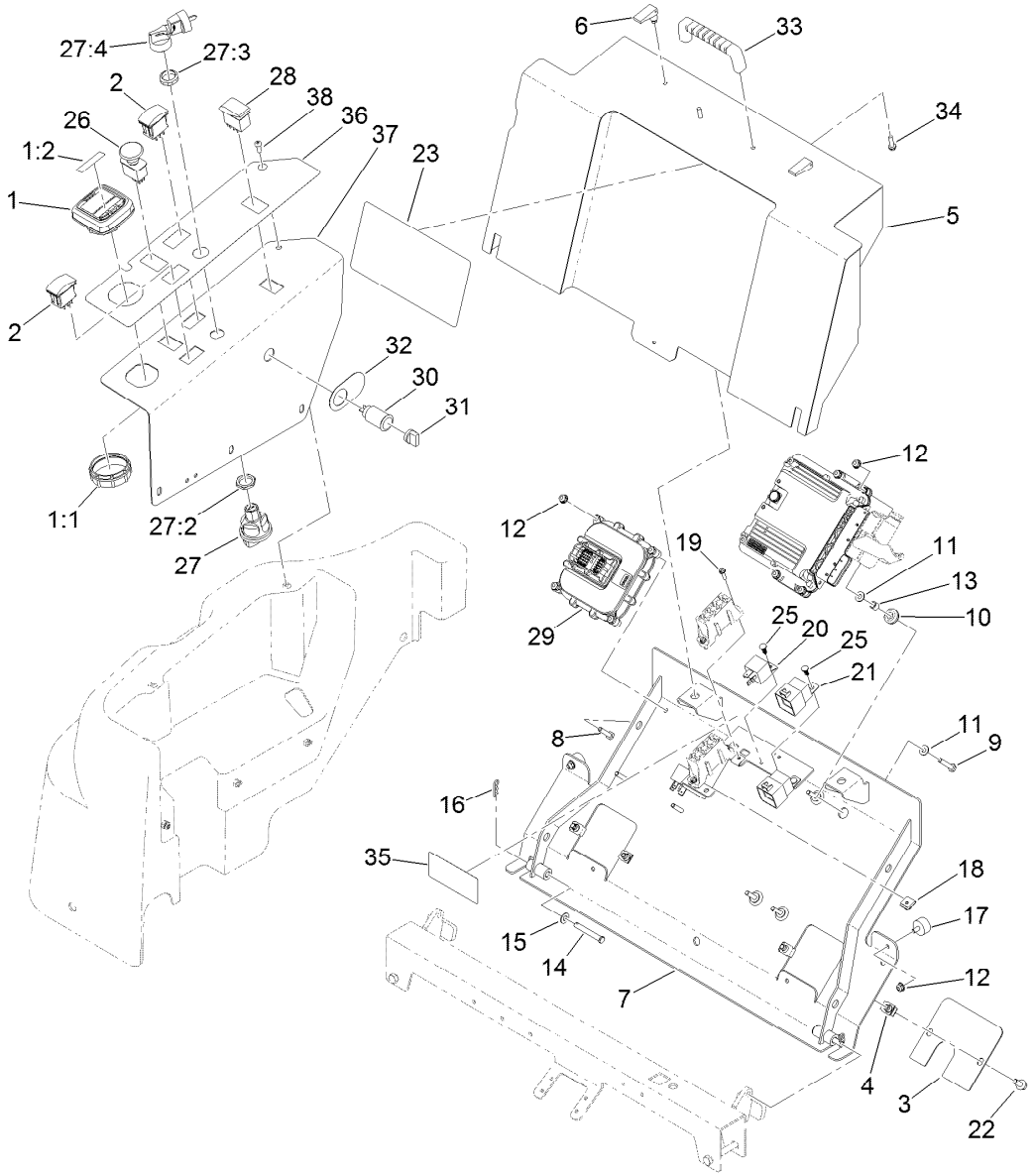


# 4 Wheel Drive Module Control and Relay Assembly

| Ref. | Part Number | Qty. | Description |
|---|---|---|---|
| 1 | 120-6310 | 1 | LCD Display ASM |
| 1:1 | 120-4630 | 1 | Nut-Display |
| 1:2 | 120-6311 | 1 | Decal-Display |
| 2 | 100-1535 | 2 | Switch |
| 3 | 131-3365-03 | 2 | Plate-Cover, Ec |
| 4 | 94-2413 | 4 | Nut-U |
| 5 | 127-4867-03 | 1 | Cover-Power Center |
| 6 | 74-5950 | 2 | Latch-Swell |
| 7 | 125-4360-03 | 1 | Power Center ASM |
| 8 | 321-8 | 4 | Screw-HH |
| 9 | 321-9 | 4 | Screw-HH |
| 10 | 1-633630 | 4 | Grommet |
| 11 | 3256-22 | 8 | Washer-Flat |
| 12 | 104-7201 | 10 | Nut-Flange, NI |
| 13 | 1-633545 | 4 | Spacer |
| 14 | 110-0618 | 2 | Pin-Clevis |
| 15 | 3256-23 | 2 | Washer-Flat |
| 16 | 3290-307 | 2 | Pin-Cotter |
| 17 | 240-14 | 2 | Bumper-Rubber |
| 18 | 125-4384 | 4 | Speed Nut, U-Type |
| 19 | 32105-13 | 4 | Screw-HWH |

| Ref. | Part Number | Qty. | Description |
|---|---|---|---|
| 20 | 99-7435 | 2 | Relay-Power |
| 21 | 99-7430 | 2 | Relay |
| 22 | 3234-47 | 4 | Screw-HHF |
| 23 | 131-1946 | 1 | Decal-Instructions, Service |
| 25 | 120-6737 | 4 | Plug-Plastic |
| 26 | 95-4108 | 1 | Switch-PTO,On-On-None |
| 27 | 121-5159 | 1 | Ignition Switch ASM |
| 27:2 | 121-5160 | 1 | Nut-Hex |
| 27:3 | 121-5161 | 1 | Nut-Face |
| 27:4 | 121-5162 | 1 | Ignition Key Set |
| 28 | 100-8490 | 1 | Switch-Rocker |
| 29 | 115-1900 | 1 | Controller |
| 30 | 99-7411 | 1 | Point-Power |
| 31 | 99-7416 | 1 | Cap |
| 32 | 106-2353 | 1 | Decal-Powerpoint |
| 33 | 65-5100 | 1 | Handle-Door |
| 34 | 46-8091 | 2 | Screw-HWH |
| 35 | 117-3233 | 1 | Decal-Fuseblock |
| 36 | 125-4399 | 1 | Decal-Control Panel, T4 |
| 37 | 125-2850-03 | 1 | Panel-Control |
| 38 | 3274-31 | 5 | Screw-HSBH |

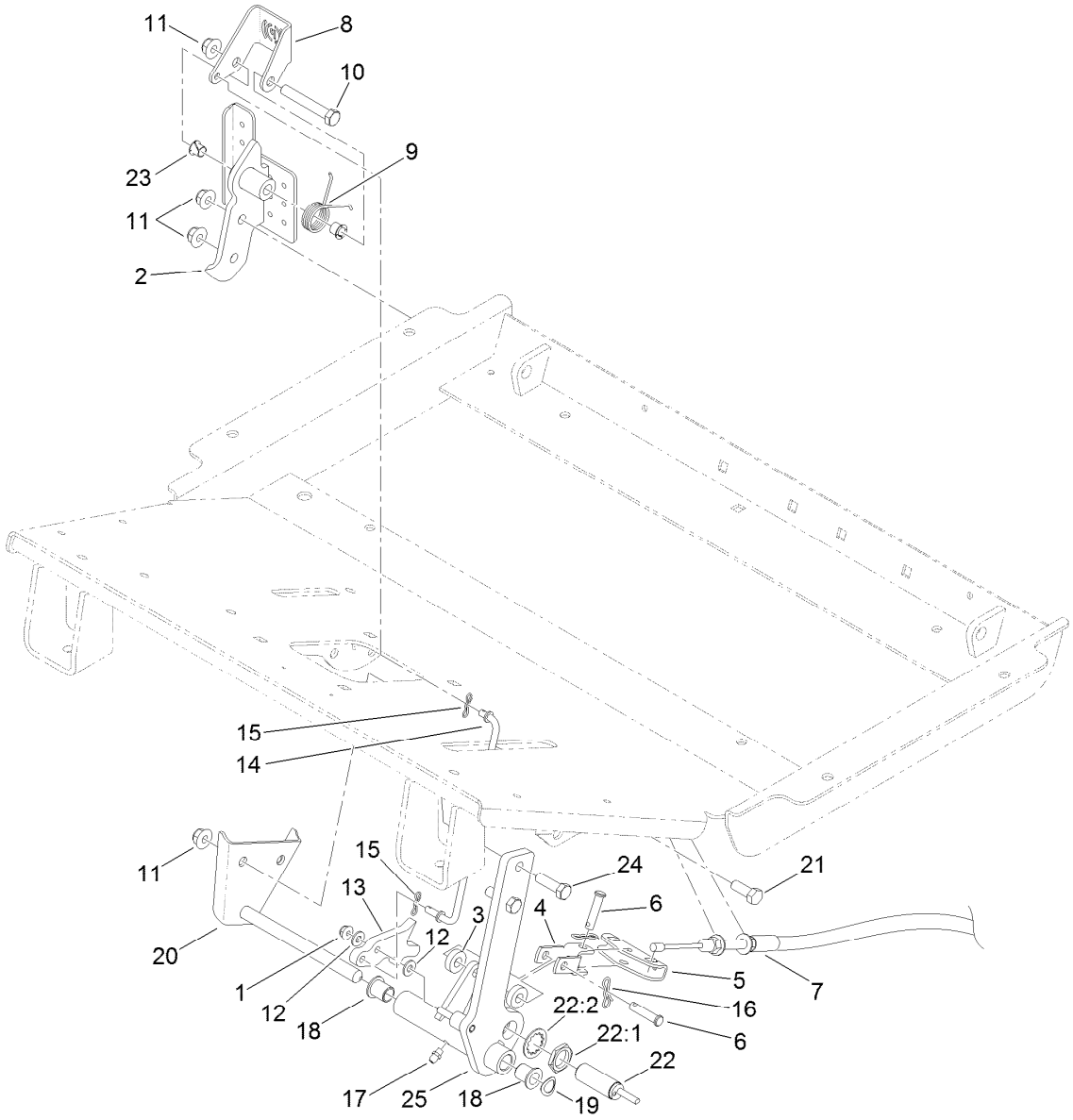


# Brake Pedal Assembly

| Ref. | Part Number | Qty. | Description |
|---|---|---|---|
| 1 | 104-7201 | 1 | Nut-Flange, NI |
| 2 | 119-1403-03 | 1 | Pedal-Brake |
| 3 | 26-4840 | 2 | Spacer-Pin, Mounting |
| 4 | 115-8060 | 1 | Clevis-Double |
| 5 | 115-8059 | 1 | Yoke-Cable |
| 6 | 283-14 | 2 | Pin-Clevis |
| 7 | 117-3214 | 2 | Cable-Brake |
| 8 | 119-1407 | 1 | Pedal-Park |
| 9 | 99-7140 | 1 | Spring-Torsion |
| 10 | 323-12 | 1 | Screw-HH |
| 11 | 104-8301 | 5 | Nut-Flange, NI |
| 12 | 3256-22 | 2 | Washer-Flat |
| 13 | 119-1406 | 1 | Detent-Brake |
| 14 | 119-1405 | 1 | Rod-Brake Pawl |

| Ref. | Part Number | Qty. | Description |
|---|---|---|---|
| 15 | 119-1414 | 2 | Pin-Cotter, Locking |
| 16 | 119-1415 | 2 | Pin-Cotter, Locking |
| 17 | 302-5 | 1 | Fitting-Grease |
| 18 | 125-8775 | 2 | Bushing-Flange |
| 19 | 3290-221 | 1 | Washer-Spring |
| 20 | 119-1388 | 1 | Pin-Brake |
| 21 | 323-6 | 2 | Screw-HH |
| 22 | 115-5300 | 1 | Proximity Switch ASM |
| 22:1 | 117-3207 | 2 | Nut-Hex |
| 22:2 | 117-3208 | 2 | Washer-Lock, Internal Tooth |
| 23 | 52-2891 | 2 | Bushing-Flanged, Nylon |
| 24 | 323-7 | 2 | Screw-HH |
| 25 | 119-1400-03 | 1 | Lever-Brake |

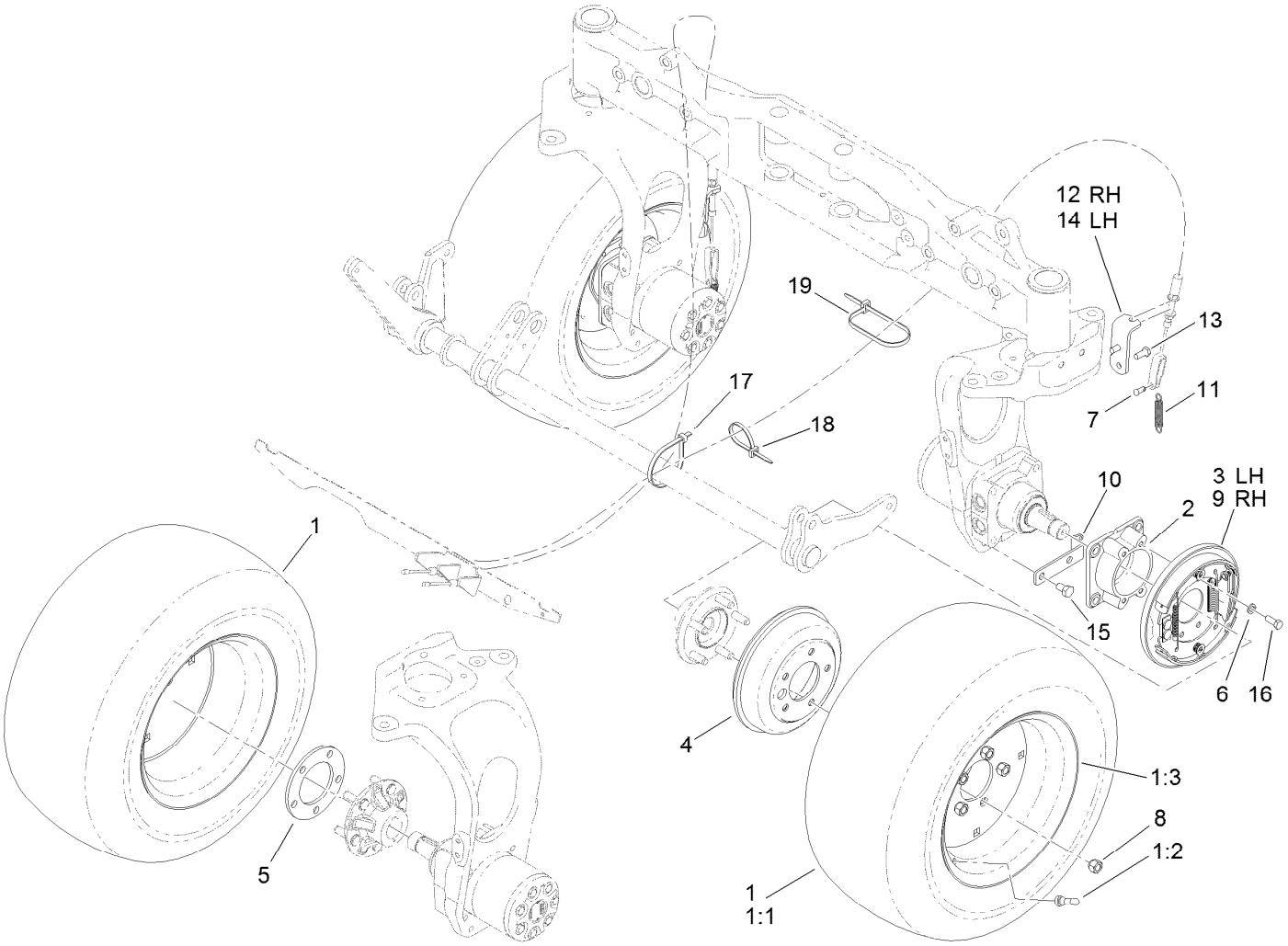


# Wheel and Brake Assembly

| Ref. | Part Number | Qty. | Description |
|---|---|---|---|
| 1 | 117-2900 | 4 | Tire And Wheel ASM |
| 1:1 | 117-2901 | 1 | Tire |
| 1:2 | 232-27 | 1 | Stem-Valve |
| 1:3 | 117-2902 | 1 | Rim |
| 2 | 120-0248-03 | 2 | Adapter-Brake |
| 3 | 120-0235 | 1 | LH Brake ASM |
| 4 | 114-8864 | 2 | Drum-Brake |
| 5 | 115-0199-03 | 2 | Spacer-Wheel |
| 6 | 3253-21 | 8 | Washer-Lock |
| 7 | 283-62 | 2 | Pin-Clevis |
| 8 | 242-50 | 10 | Nut-Lug |

| Ref. | Part Number | Qty. | Description |
|---|---|---|---|
| 9 | 120-0233 | 1 | RH Brake ASM |
| 10 | 115-0132 | 2 | Bracket-Spring, Return |
| 11 | 87-4020 | 2 | Spring-Extension |
| 12 | 119-1352-03 | 1 | Bracket-Brake Cable, RH |
| 13 | 325-2 | 4 | Screw-HH |
| 14 | 119-1449-03 | 1 | Bracket-Brake Cable, LH |
| 15 | 323-5 | 4 | Screw-HH |
| 16 | 323-6 | 8 | Screw-HH |
| 17 | 3334-945 | 1 | Tie-Cable |
| 18 | 3290-378 | 1 | Tie-Cable |
| 19 | 250-5 | 1 | Tie-Cable |

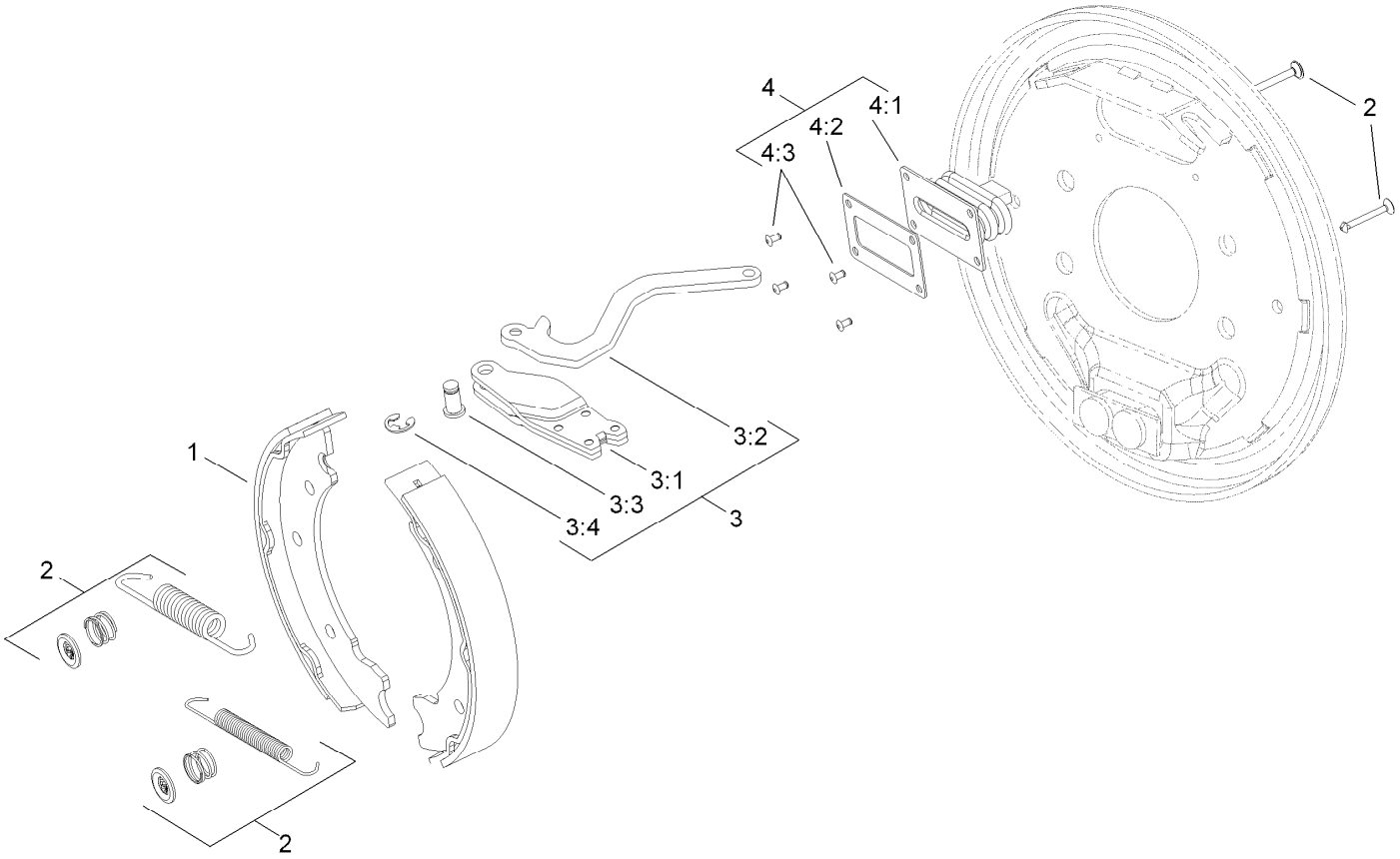


# Left Hand Brake Assembly No. 120-0235

| *Ref.* | *Part Number* | *Qty.* | *Description* |
|---|---|---|---|
| 1 | 108-6981 | 1 | Brake Shoe Kit |
| 2 | 108-6983 | 1 | Brake Hardware Kit |
| 3 | 120-0236 | 1 | LH Actuator Kit |
| 3:1 | | 1 | Housing ● |
| 3:2 | | 1 | Lever-LH ● |
| 3:3 | | 1 | Pin-Pivot ● |
| 3:4 | | 1 | E-Ring ● |
| 4 | 110-8885 | 1 | Dust Boot Kit |
| 4:1 | | 1 | Boot ● |
| 4:2 | | 1 | Plate-Back Up ● |
| 4:3 | | 2 | Rivet ● |

● Not serviced separately

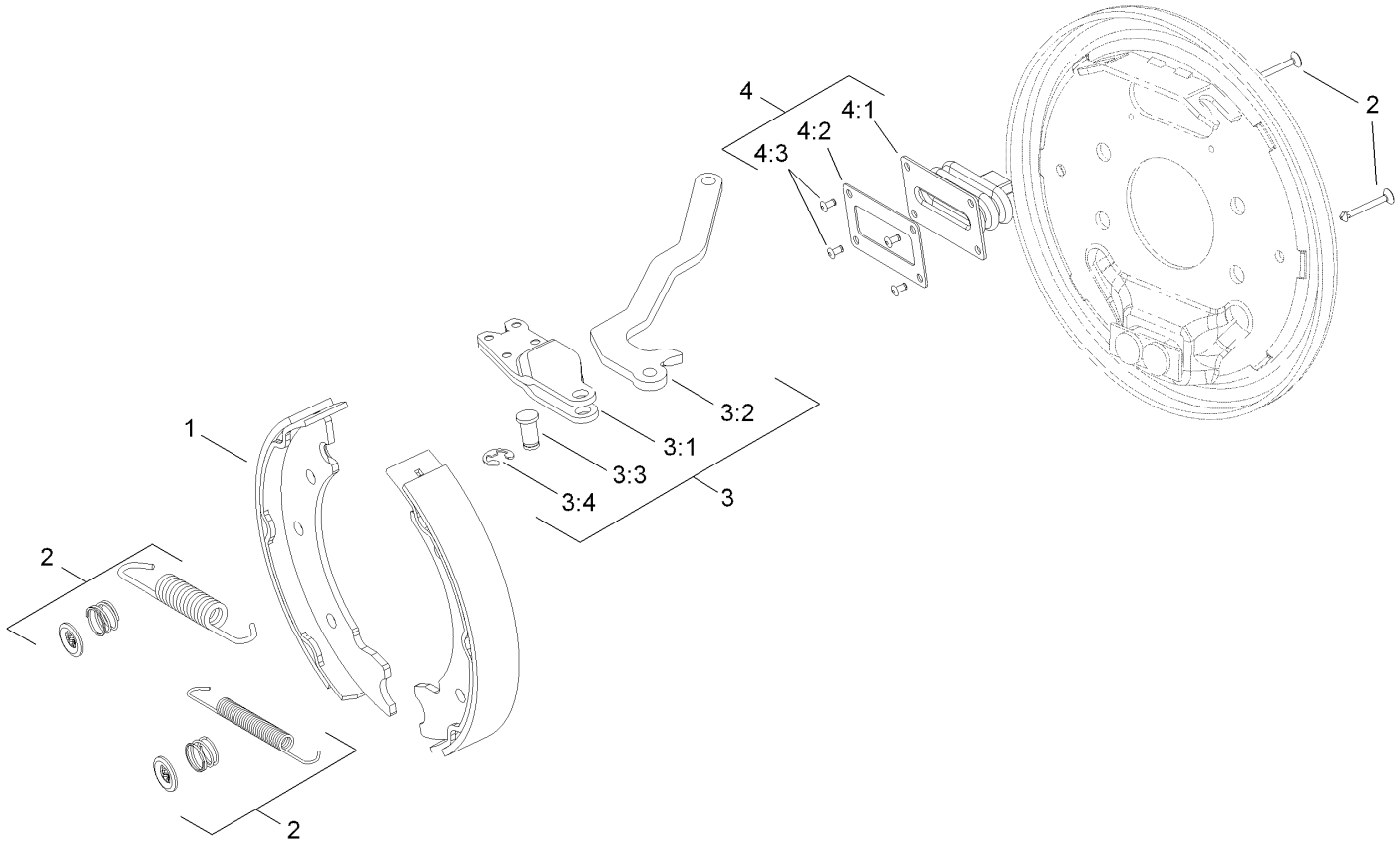


# Right Hand Brake Assembly No. 120-0233

| *Ref.* | *Part Number* | *Qty.* | *Description* |
|---|---|---|---|
| 1 | 108-6981 | 1 | Brake Shoe Kit |
| 2 | 108-6983 | 1 | Brake Hardware Kit |
| 3 | 120-0234 | 1 | RH Actuator Kit |
| 3:1 | | 1 | Housing ● |
| 3:2 | | 1 | Lever-RH ● |
| 3:3 | | 1 | Pin-Pivot ● |
| 3:4 | | 1 | E-Ring ● |
| 4 | 110-8885 | 1 | Dust Boot Kit |
| 4:1 | | 1 | Boot ● |
| 4:2 | | 1 | Plate-Back Up ● |
| 4:3 | | 2 | Rivet ● |

● Not serviced separately

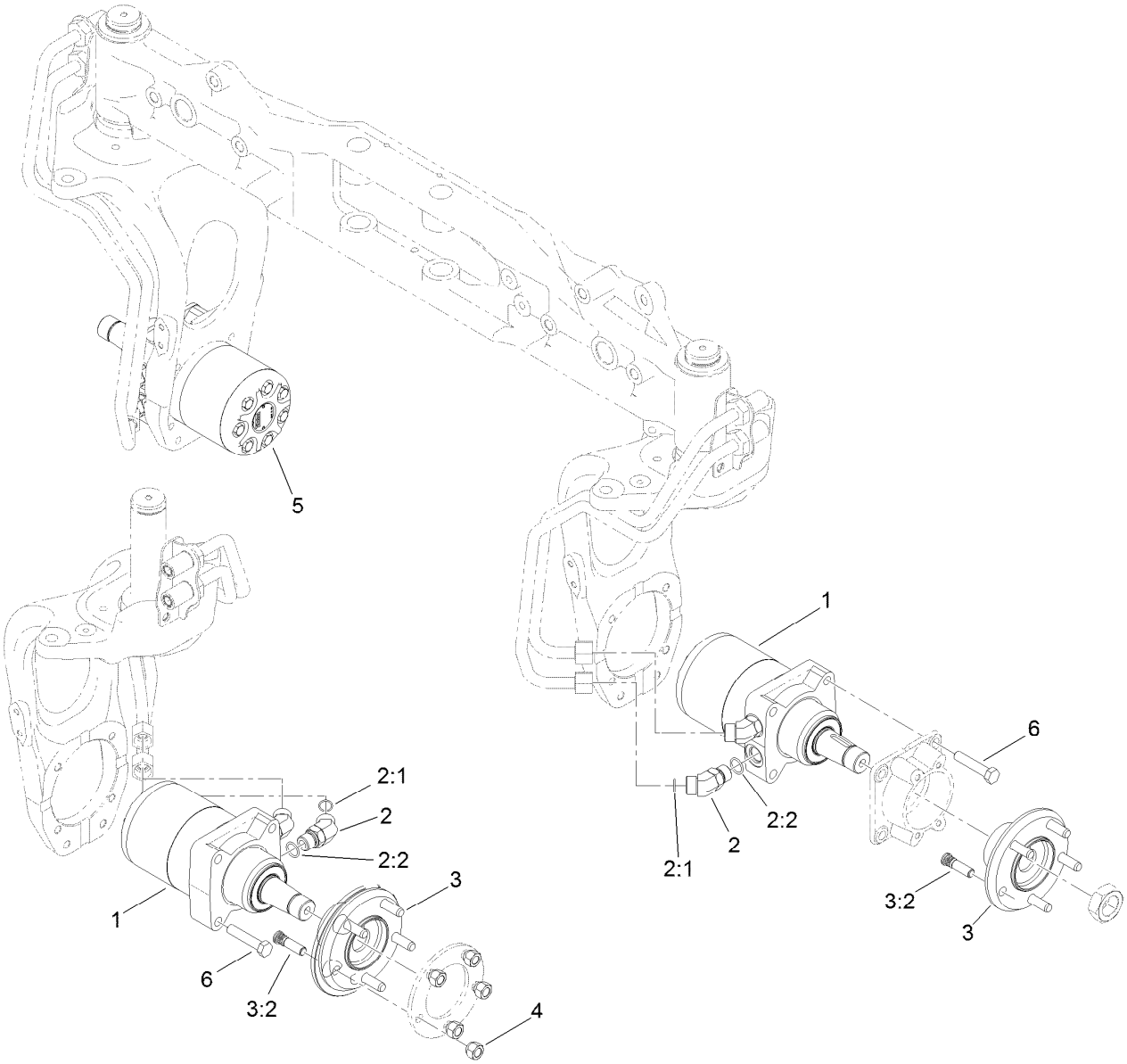


# 4 Wheel Drive Hydraulic Motor and Fitting Assembly

| *Ref.* | *Part Number* | *Qty.* | *Description* |
|---|---|---|---|
| 1 | 117-3284 | 2 | HYD Motor ASM (280 CCW) |
| 2 | 340-14 | 8 | Fitting-HYD, 45 DEG |
| 2:1 | 237-65 | 1 | O-Ring |
| 2:2 | 237-80 | 1 | O-Ring |
| 3 | 121-5492 | 4 | Wheel Hub ASM |
| 3:2 | 114-3918 | 5 | Stud-Wheel |
| 4 | 242-50 | 10 | Nut-Lug |
| 5 | 117-3285 | 2 | HYD Motor ASM (280 CW) |
| 6 | 325-34 | 16 | Screw-HH |

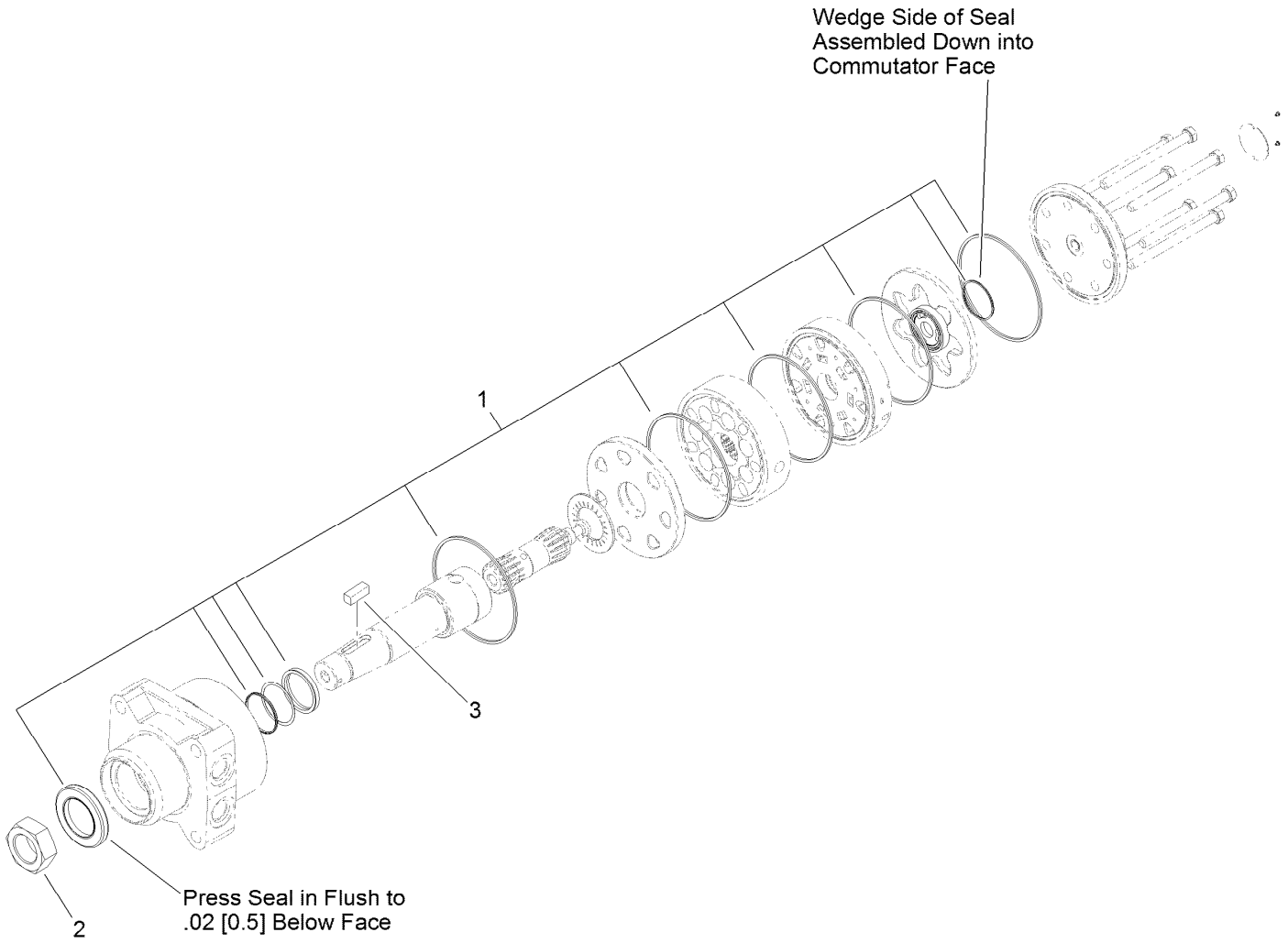


# Hydraulic Motor Assembly No. 117-3285 (CW)

| *Ref.* | *Part Number* | *Qty.* | *Description* |
|---|---|---|---|
| 1 | 107-9368 | 1 | Seal Kit |
| 2 | 117-3290 | 1 | Nut-Hex |
| 3 | 117-5198 | 1 | Key-Square |

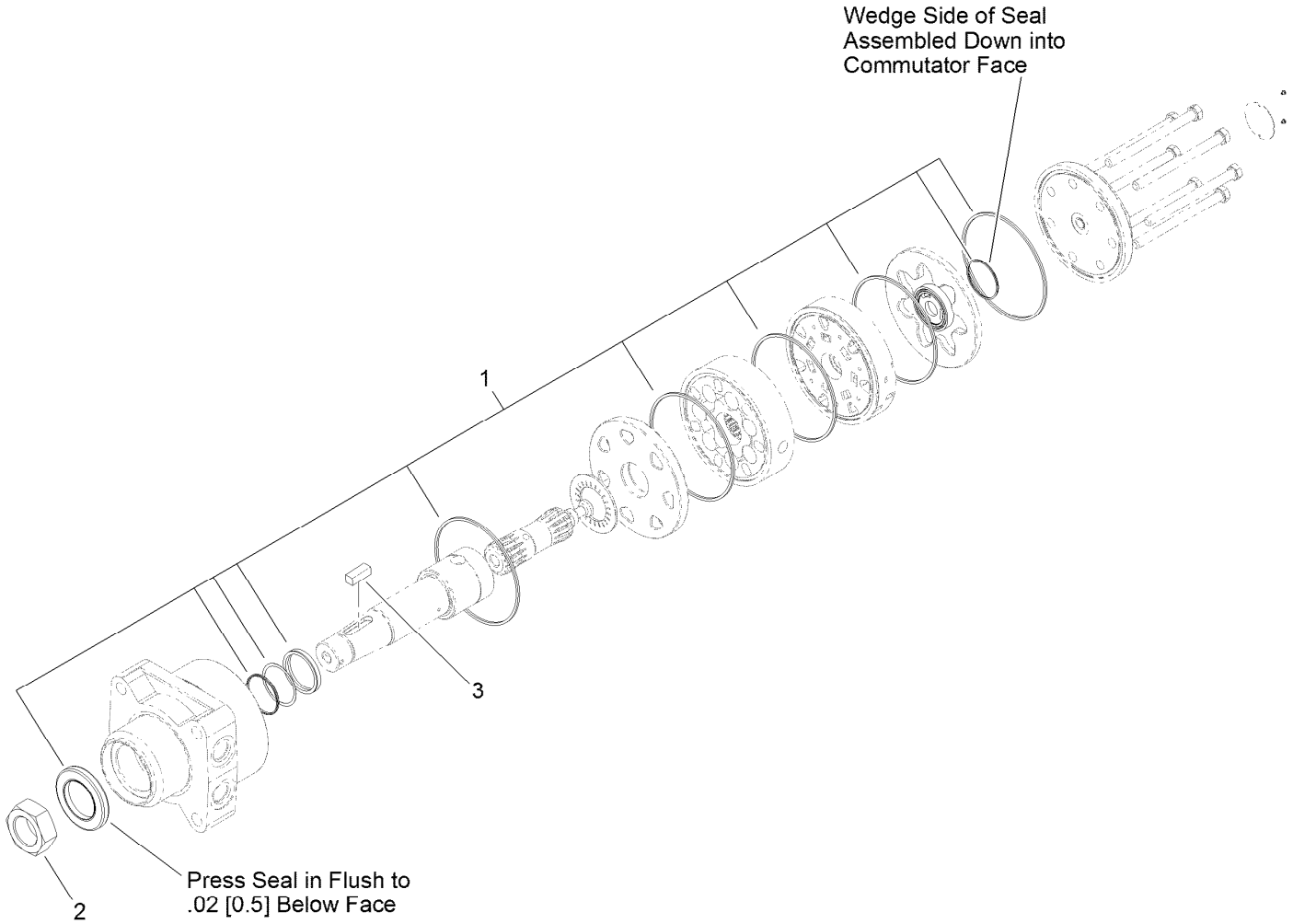


# Hydraulic Motor Assembly No. 117-3284 (CCW)

| *Ref.* | *Part Number* | *Qty.* | *Description* |
|---|---|---|---|
| 1 | 107-9368 | 1 | Seal Kit |
| 2 | 117-3290 | 1 | Nut-Hex |
| 3 | 117-5198 | 1 | Key-Square |

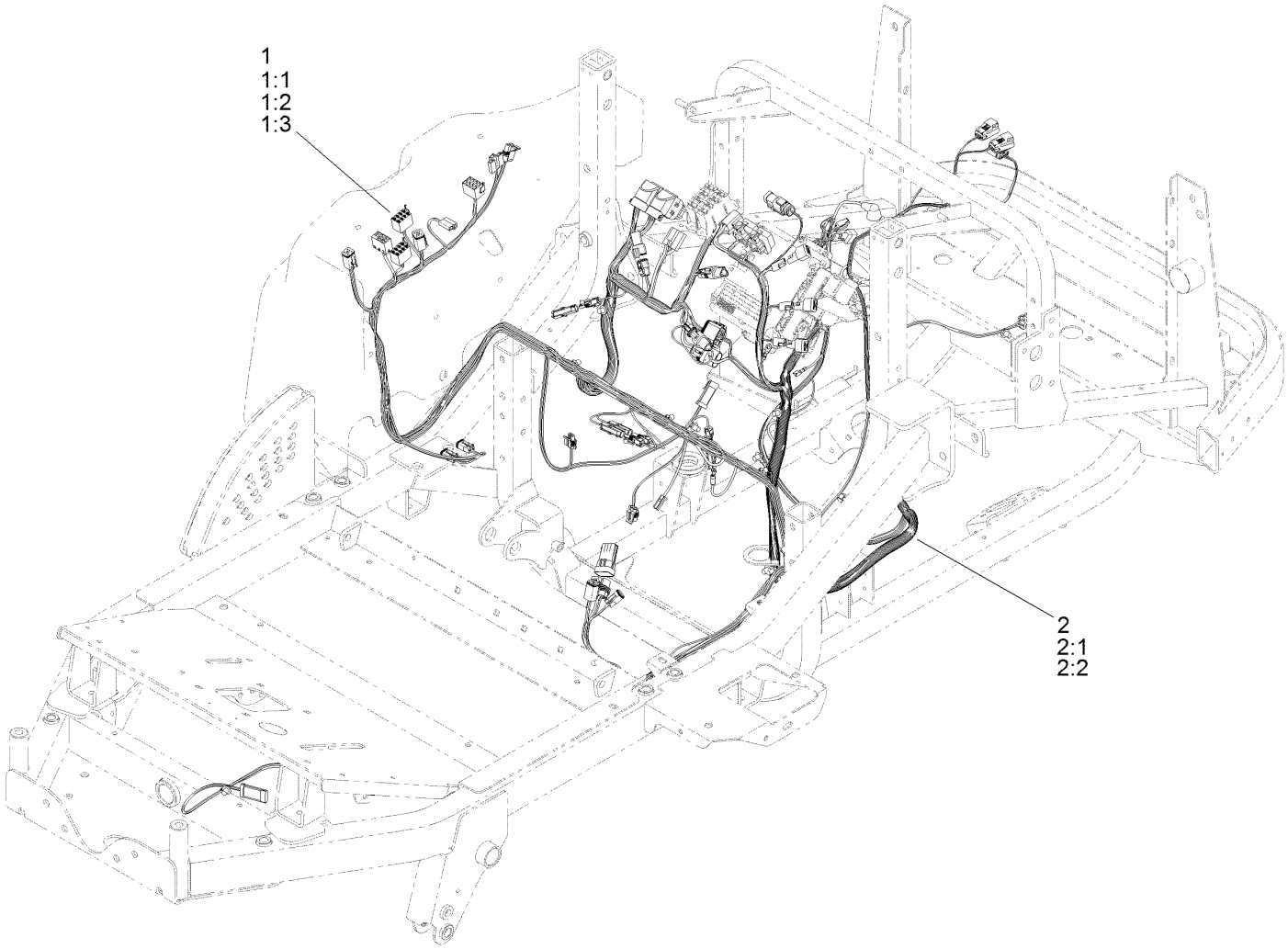


# Electrical Assembly

| *Ref.* | *Part Number* | *Qty.* | *Description* |
|---|---|---|---|
| 1 | 119-4373 | 1 | Harness-Platform |
| 1:1 | 218-578 | 4 | Fuse-Blade, 10 Amp |
| 1:2 | 109355 | 1 | Fuse-Blade, 15 Amp |
| 1:3 | 114241 | 3 | Fuse-Blade, 7.5 Amp |
| 2 | 119-4375 | 1 | Harness-Engine |
| 2:1 | 109102 | 1 | Fuse-Blade, 25 Amp |
| 2:2 | 94-6710 | 1 | Fuse-2 Amp |

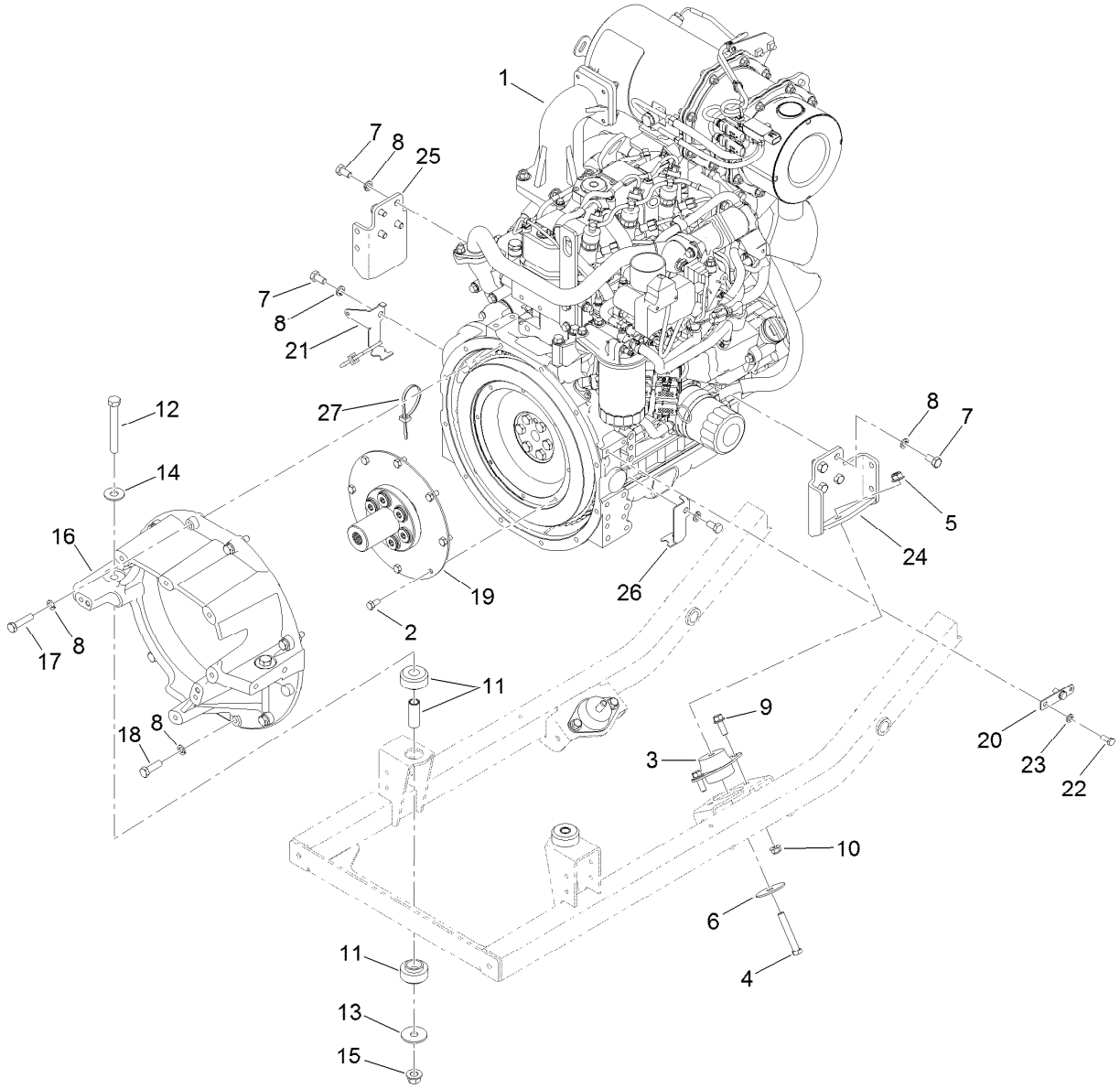


# Engine Assembly

| Ref. | Part Number | Qty. | Description |
|---|---|---|---|
| 1 | 121-5399 | 1 | Engine-Yanmar |
| 2 | 99-5132 | 8 | Bolt |
| 3 | 53-9681 | 2 | Mount-Engine |
| 4 | 324-11 | 2 | Screw-HH |
| 5 | 114-8417 | 2 | Nut-HF, NI |
| 6 | 87-5100 | 2 | Washer-Snubbing |
| 7 | 33115-020 | 10 | Screw-HH |
| 8 | 48-9590 | 19 | Washer-Lock |
| 9 | 3234-42 | 4 | Screw-HHF |
| 10 | 104-8301 | 4 | Nut-Flange, NI |
| 11 | 120-9168 | 2 | Mount-Rubber |
| 12 | 325-17 | 2 | Screw-HH |
| 13 | 86-1990 | 2 | Washer-Thrust |
| 14 | 3256-6 | 2 | Washer-Flat |

| Ref. | Part Number | Qty. | Description |
|---|---|---|---|
| 15 | 99-5107 | 2 | Nut-Lock |
| 16 | 125-2836 | 1 | Housing-Flywheel |
| 17 | 33115-045 | 7 | Screw-HH |
| 18 | 33115-035 | 2 | Screw-HH |
| 19 | 120-9131 | 1 | Coupling-Flywheel |
| 20 | 121-5636 | 1 | Tab-Harness |
| 21 | 127-2774 | 1 | Bracket-Harness, RH |
| 22 | 33114-020 | 2 | Screw-HH |
| 23 | 3253-4 | 2 | Washer-Lock |
| 24 | 125-2841-03 | 1 | Mount-LH |
| 25 | 125-4363-03 | 1 | Mount |
| 26 | 127-2773 | 1 | Bracket-Harness, LH |
| 27 | 3290-378 | 4 | Tie-Cable |

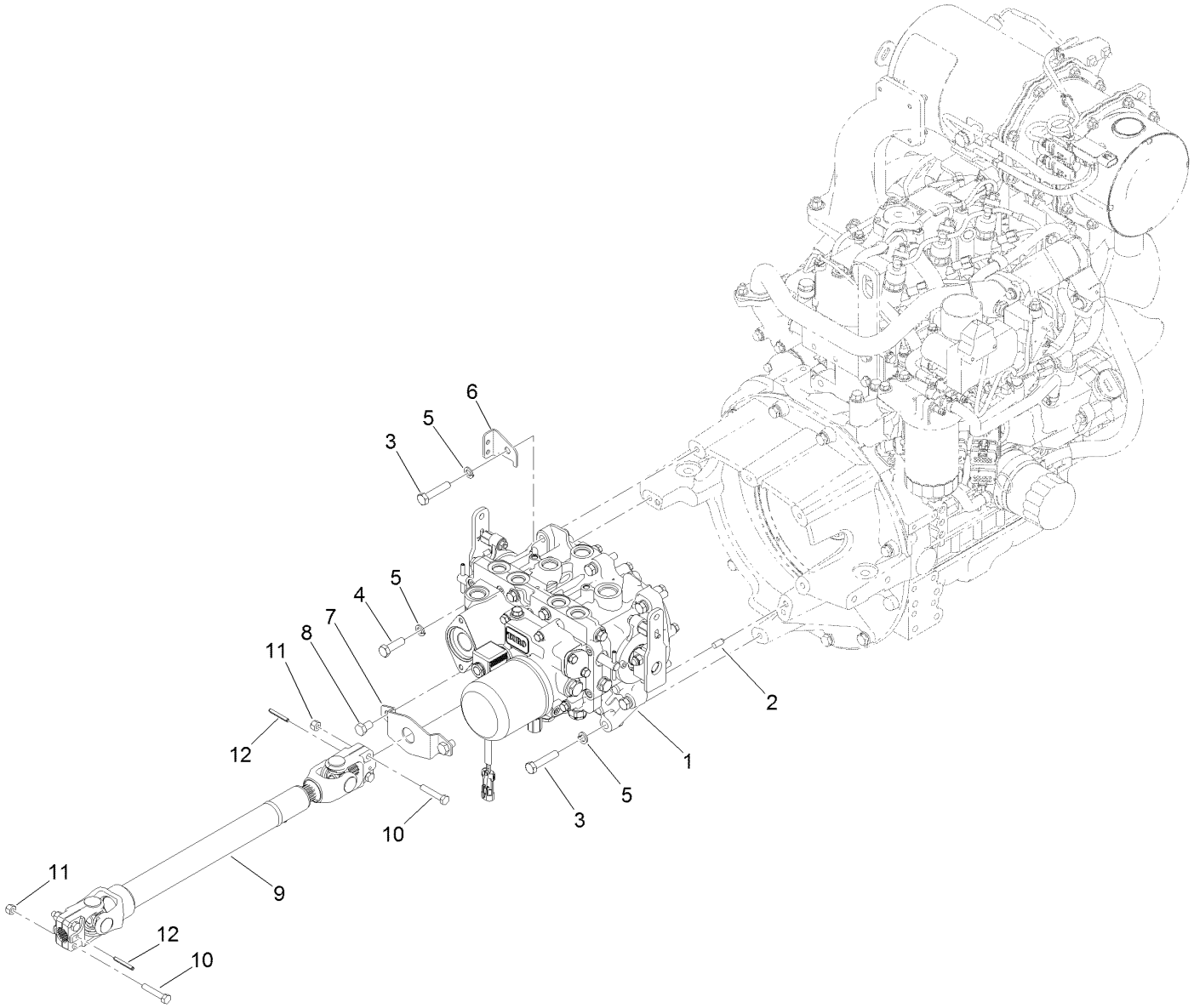


# Transmission Component Assembly

| Ref. | Part Number | Qty. | Description |
|---|---|---|---|
| 1 | 125-9290 | 1 | Transmisson ASM |
| 2 | 87-1910 | 2 | Pin-Dowel |
| 3 | 33115-050 | 6 | Screw-HH |
| 4 | 33115-035 | 1 | Screw-HH |
| 5 | 48-9590 | 7 | Washer-Lock |
| 6 | 120-0239 | 1 | Support-Tube |
| 7 | 114-4088 | 1 | Shield-Seal |
| 8 | 33115-016 | 2 | Screw-HH |
| 9 | 110-3575 | 1 | Driveshaft ASM |
| 10 | 322-9 | 4 | Screw-HH |
| 11 | 3296-29 | 4 | Nut-Lock, NI |
| 12 | 32121-34 | 2 | Pin-Roll |

# Charge Pump Housing Assembly
# Transmission Assembly No. 125-9290

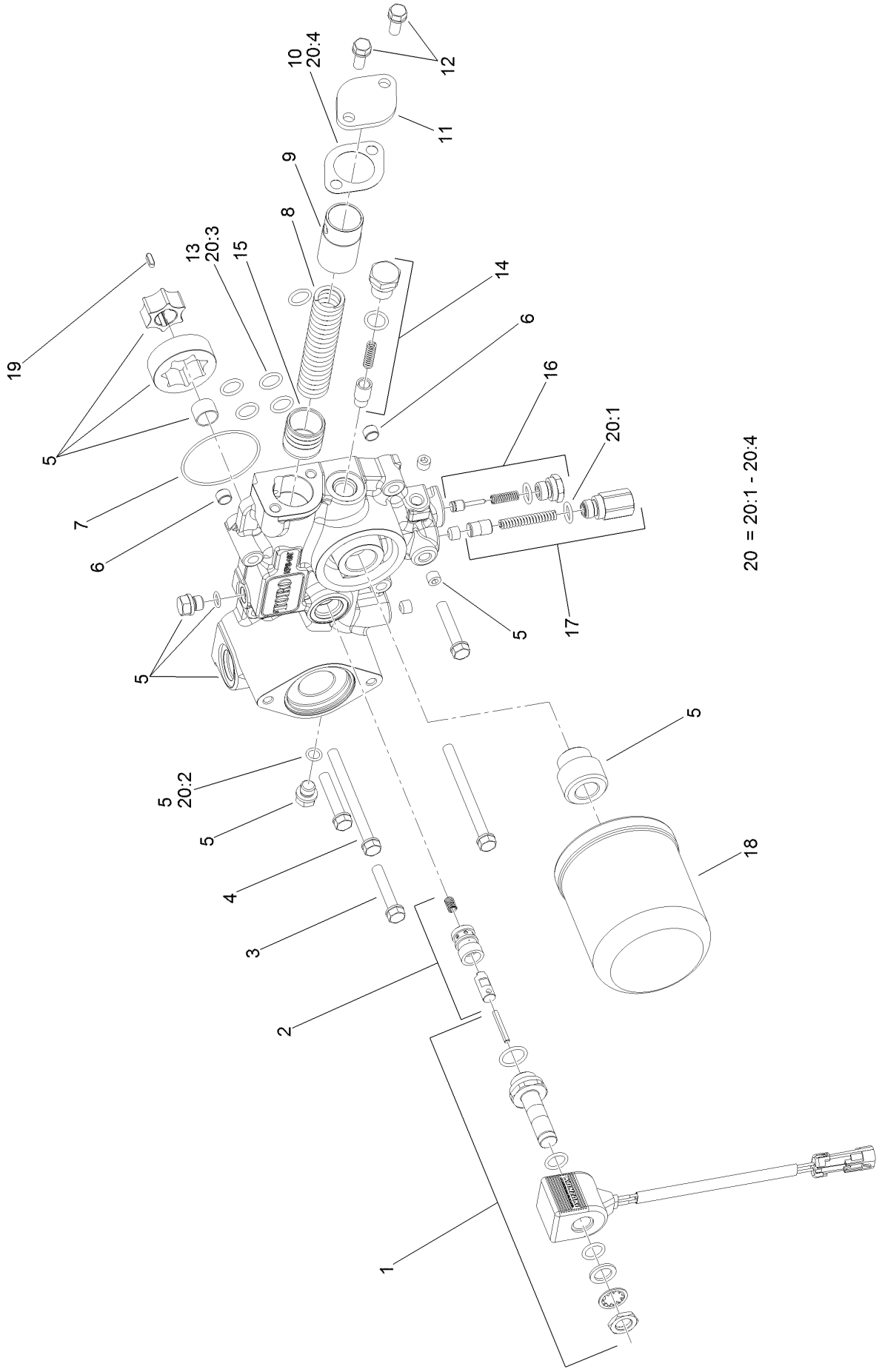

# Charge Pump Housing Assembly
# Transmission Assembly No. 125-9290 (continued)

| Ref. | Part Number | Qty. | Description |
|---|---|---|---|
| 1 | 107-0851 | 1 | Solenoid ASM |
| 2 | 107-0850 | 1 | Solenoid Valve ASM |
| 3 | 107-0863 | 3 | Bolt |
| 4 | 107-0864 | 2 | Bolt |
| 5 | 107-0840 | 1 | Pump Body ASM |
| 6 | 107-0848 | 2 | Pin |
| 7 | 107-0856 | 1 | O-Ring |
| 8 | 107-0845 | 1 | Spring |
| 9 | 107-0844 | 1 | Collar |
| 10 | 107-0847 | 1 | Gasket |
| 11 | 107-0846 | 1 | Cover |
| 12 | 93-0457 | 2 | Bolt And Washer ASM |
| 13 | 104-3298 | 1 | Packing |
| 14 | 107-0843 | 1 | Filter Bypass Valve ASM |
| 15 | 107-0818 | 1 | Piston |
| 16 | 120-5153 | 1 | Charge Relief Valve ASM |
| 17 | 107-0841 | 1 | Pressure Valve ASM |
| 18 | 108-5194 | 1 | Filter-Oil, HYD |
| 19 | 107-0865 | 1 | Key |
| 20 | 107-0855 | 1 | Charge Pump Seal Kit |
| 20:1 | 93-0418 | 2 | O-Ring |
| 20:2 | 107-0817 | 2 | O Ring-Plug |
| 20:3 | 104-3298 | 6 | Packing |
| 20:4 | 107-0847 | 1 | Gasket |

# Center Section Assembly
# Transmission Assembly No. 125-9290

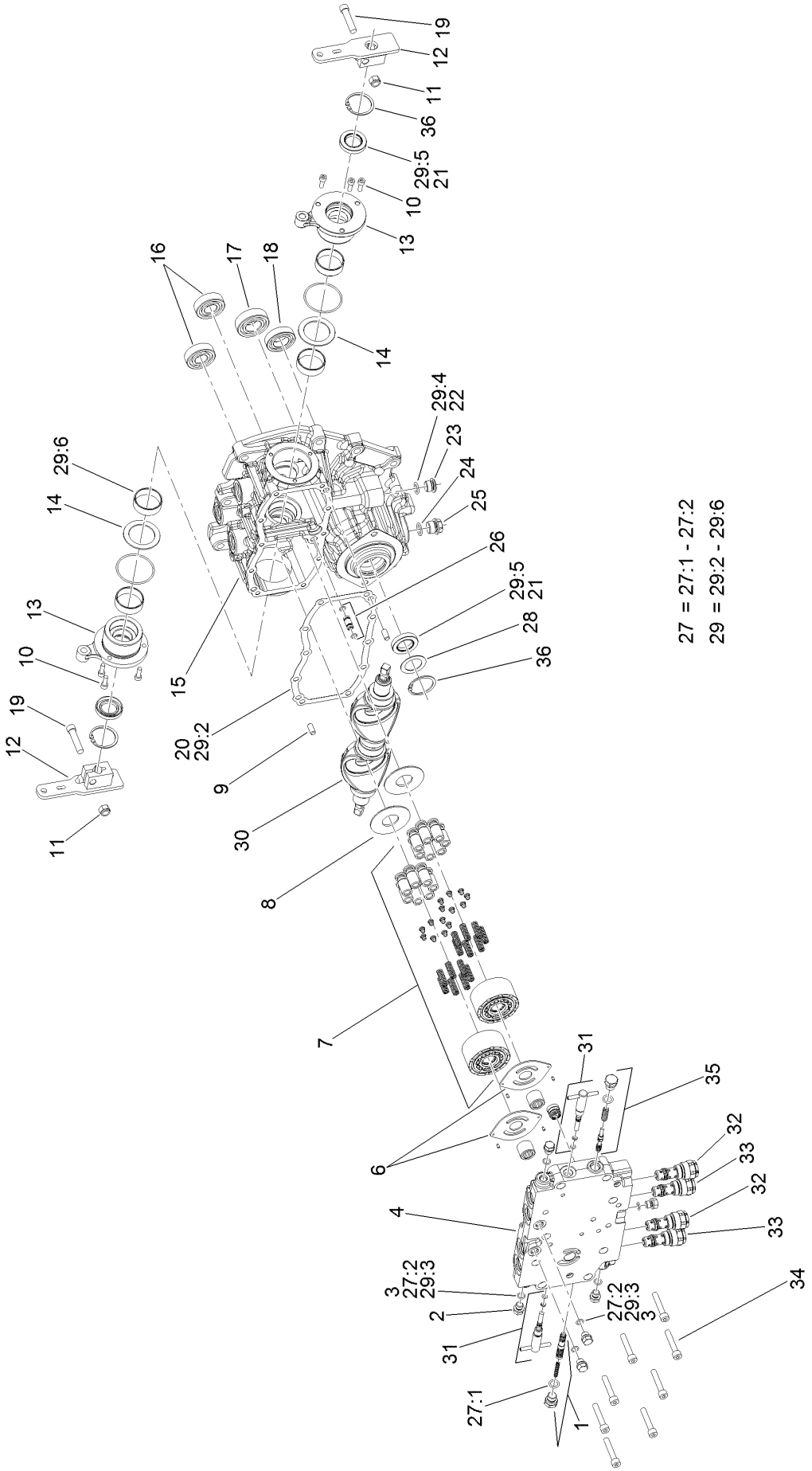

# Center Section Assembly
# Transmission Assembly No. 125-9290 (continued)

| Ref. | Part Number | Qty. | Description |
|---|---|---|---|
| 1 | 107-0807 | 1 | Valve-Flushing, RH |
| 2 | 107-0857 | 6 | Plug |
| 3 | 107-0817 | 6 | O Ring-Plug |
| 4 | 120-5150 | 1 | Center Case ASM |
| 6 | 107-0805 | 2 | Plate-Valve |
| 7 | 107-0824 | 2 | Cylinder Block ASM |
| 8 | 107-0830 | 2 | Plate-Thrust |
| 9 | 92-0765 | 4 | Pin-Parallel |
| 10 | 107-0859 | 6 | Bolt |
| 11 | 120-6681 | 2 | U-Nut |
| 12 | 131-5505 | 2 | Arm-Control |
| 13 | 107-0832 | 2 | Side Cover ASM |
| 14 | 107-0829 | 2 | Washer |
| 15 | 120-5151 | 1 | Pump Housing ASM |
| 16 | 107-0826 | 2 | Bearing |
| 17 | 107-0821 | 1 | Bearing |
| 18 | 107-0838 | 1 | Bearing |
| 19 | 120-6682 | 2 | Bolt |
| 20 | 107-0810 | 2 | Gasket-Case, Center |
| 21 | 107-0814 | 1 | Seal |
| 22 | 104-3298 | 1 | Packing |

| Ref. | Part Number | Qty. | Description |
|---|---|---|---|
| 23 | 107-0861 | 1 | Plug-NPTF |
| 24 | 237-79 | 1 | O-Ring |
| 25 | 107-0867 | 1 | Plug |
| 26 | 107-0812 | 1 | Pipe |
| 27 | 107-0852 | 1 | Center Case Seal Kit |
| 27:1 | 93-0418 | 2 | O-Ring |
| 27:2 | 107-0817 | 6 | O Ring-Plug |
| 28 | 107-0813 | 1 | Spacer |
| 29 | 107-0853 | 1 | Pump Housing Seal Kit |
| 29:2 | 107-0810 | 1 | Gasket-Case, Center |
| 29:3 | 107-0817 | 2 | O Ring-Plug |
| 29:4 | 104-3298 | 1 | Packing |
| 29:5 | 107-0814 | 3 | Seal |
| 29:6 | 107-0825 | 4 | Ring-Seal |
| 30 | 120-6679 | 2 | Plate-Swash |
| 31 | 107-0808 | 2 | Valve-Bypass |
| 32 | 107-0804 | 2 | Valve-Rear |
| 33 | 107-0803 | 2 | Valve-Front |
| 34 | 107-0863 | 8 | Bolt |
| 35 | 107-0806 | 1 | Valve-Flushing, LH |
| 36 | 92-0757 | 2 | Ring-Snap |

# Gear Case and Clutch Assembly
# Transmission Assembly No. 125-9290

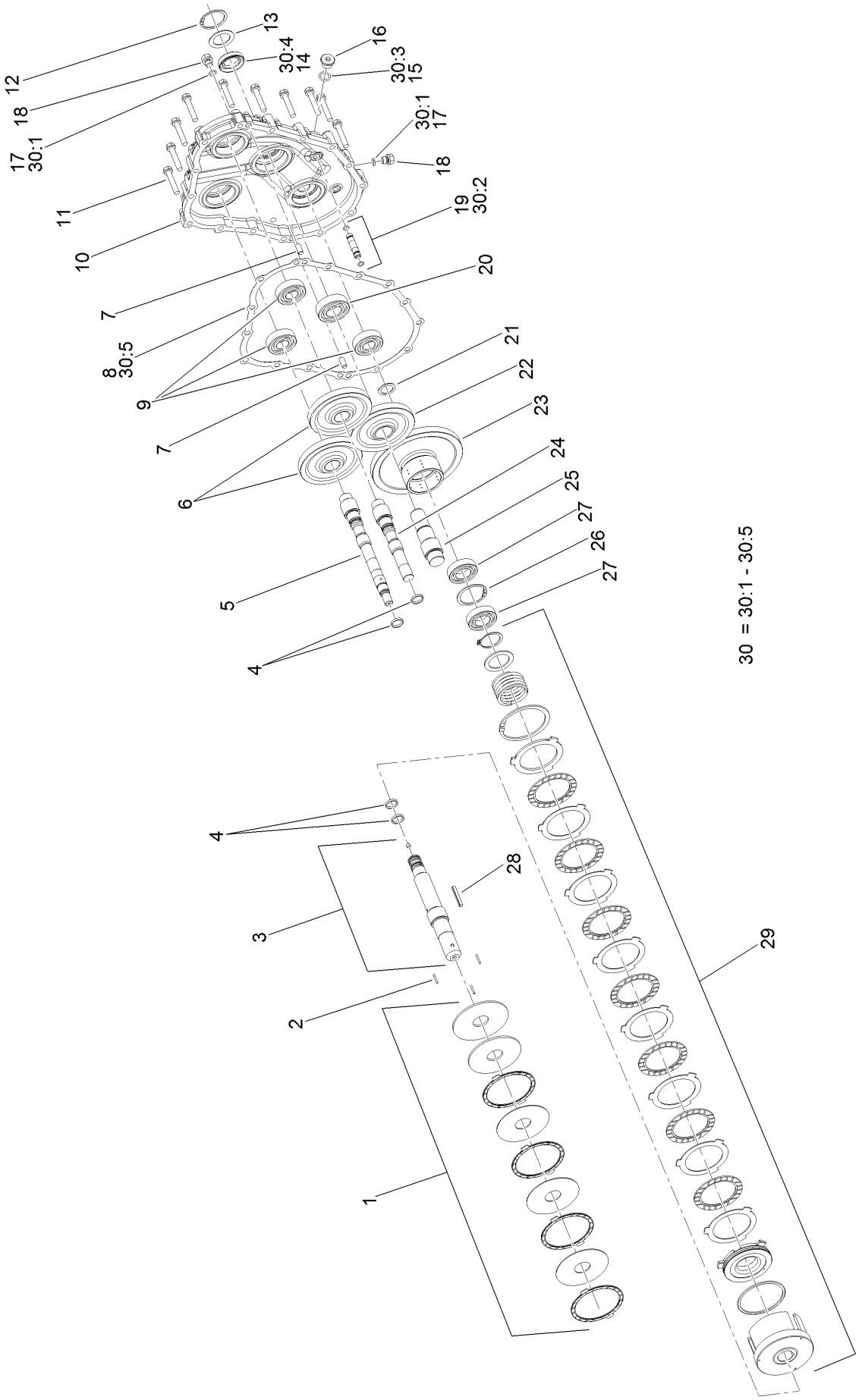

# Gear Case and Clutch Assembly
# Transmission Assembly No. 125-9290 (continued)

| Ref. | Part Number | Qty. | Description |
|---|---|---|---|
| 1 | 107-0839 | 1 | PTO Brake ASM |
| 2 | 107-0837 | 3 | Rod-Push |
| 3 | 107-0833 | 1 | PTO Shaft ASM |
| 4 | 107-0825 | 2 | Ring-Seal |
| 5 | 107-0827 | 1 | Shaft-Pump |
| 6 | 107-0823 | 2 | Gear-Pump |
| 7 | 92-0765 | 4 | Pin-Parallel |
| 8 | 107-0816 | 1 | Gasket-Housing, Gear |
| 9 | 107-0826 | 4 | Bearing |
| 10 | 120-5152 | 1 | Housing-Case, Gear |
| 11 | 107-0863 | 13 | Bolt |
| 12 | 92-0757 | 1 | Ring-Snap |
| 13 | 107-0813 | 1 | Spacer |
| 14 | 107-0814 | 1 | Seal |
| 15 | 104-3298 | 1 | Packing |
| 16 | 107-0861 | 1 | Plug-NPTF |
| 17 | 107-0817 | 6 | O Ring-Plug |
| 18 | 107-0857 | 6 | Plug |
| 19 | 107-0811 | 1 | Pipe |
| 20 | 107-0821 | 2 | Bearing |
| 21 | 107-0836 | 1 | Spacer |
| 22 | 107-0820 | 1 | Gear-Input |
| 23 | 107-0834 | 1 | Gear-PTO |
| 24 | 107-0822 | 1 | Shaft-Pump |
| 25 | 107-0819 | 1 | Shaft-Input |
| 26 | 92-0758 | 1 | Ring-Snap |
| 27 | 107-0838 | 3 | Bearing |
| 28 | 107-0866 | 1 | Key |
| 29 | 107-0835 | 1 | Clutch Cylinder ASM |
| 30 | 107-0854 | 1 | Gear Housing Seal Kit |
| 30:1 | 107-0817 | 2 | O Ring-Plug |
| 30:2 | | 2 | O-Ring ● |
| 30:3 | 104-3298 | 1 | Packing |
| 30:4 | 107-0814 | 1 | Seal |
| 30:5 | 107-0816 | 1 | Gasket-Housing, Gear |

● Not serviced separately

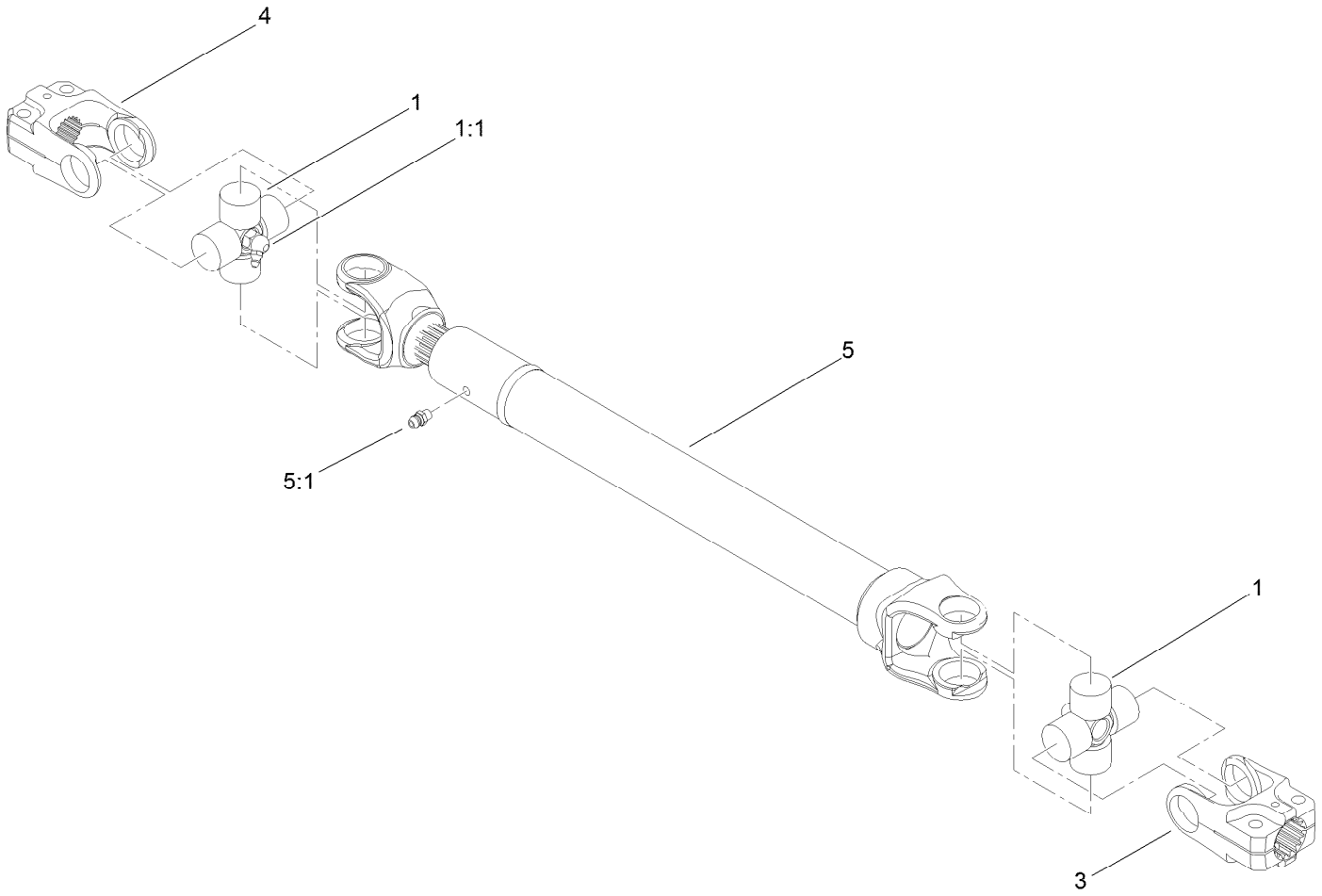


# Driveshaft Assembly No. 110-3575

| *Ref.* | *Part Number* | *Qty.* | *Description* |
|---|---|---|---|
| 1 | 112-1687 | 2 | Cross And Bearing Kit |
| 1:1 | 62-3820 | 1 | Fitting-Grease |
| 3 | 54-9040 | 1 | Yoke-End |
| 4 | 54-9090 | 1 | Yoke-End |
| 5 | | 1 | Tube-Yoke, Slip ● |
| 5:1 | 302-22 | 1 | Fitting-Grease |

● Not serviced separately

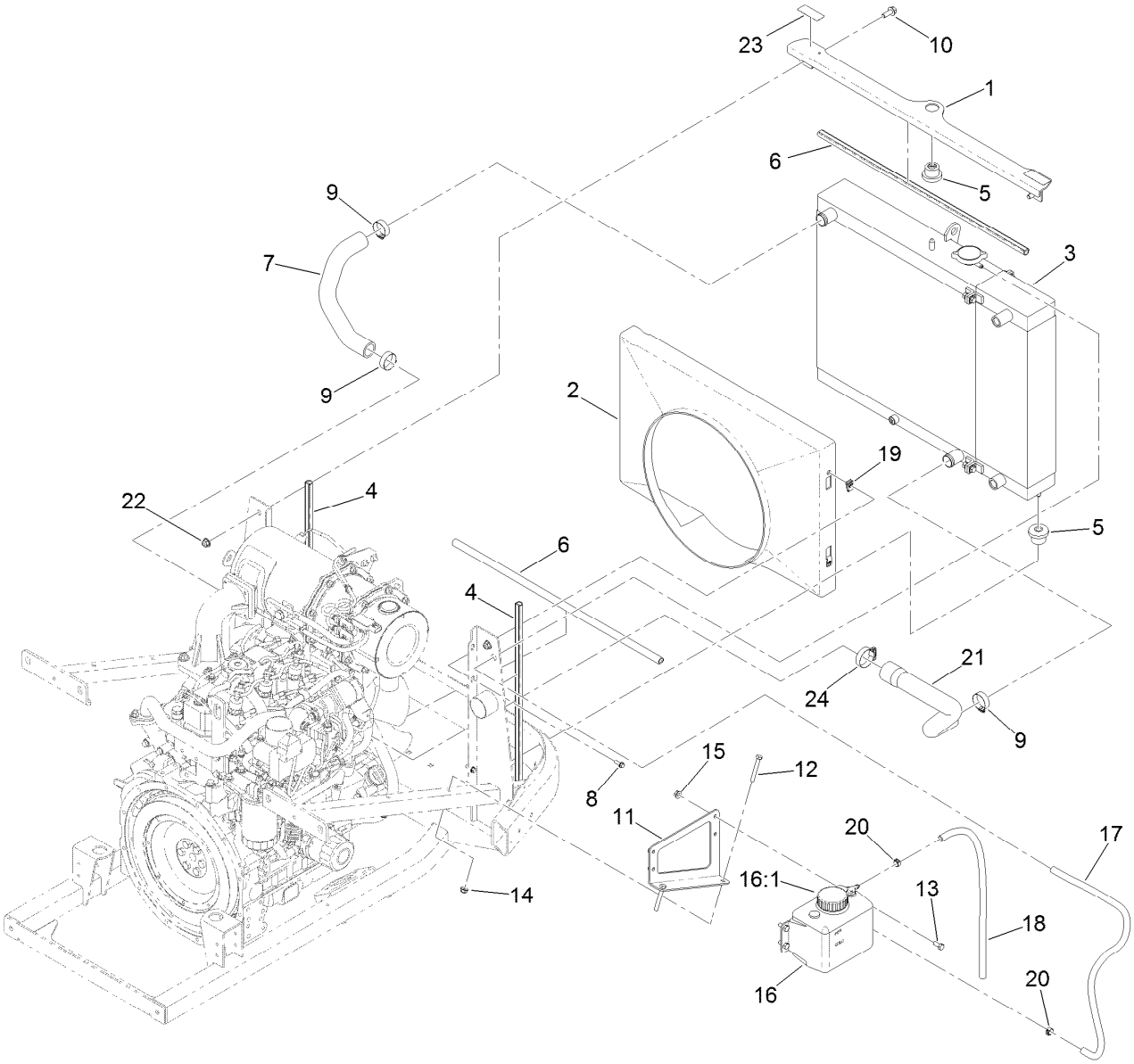


# Radiator Component Assembly

| Ref. | Part Number | Qty. | Description |
|---|---|---|---|
| 1 | 125-2838-03 | 1 | Support-Radiator |
| 2 | 125-2840 | 1 | Shroud-Fan |
| 3 | | 1 | Radiator/Cooler ASM ■● |
| 4 | 119-1426 | 2 | Seal-Bulb |
| 5 | 119-1422 | 3 | Mount-Isolator |
| 6 | 119-1427 | 2 | Seal-Bulb |
| 7 | 125-2846 | 1 | Hose-Radiator, Upper |
| 8 | 32105-15 | 4 | Screw-HWH |
| 9 | 2412-34 | 3 | Clamp-Hose |
| 10 | 3234-42 | 2 | Screw-HHF |
| 11 | 125-2816-03 | 1 | Bracket-Overflow |
| 12 | 322-11 | 2 | Screw-HH |
| 13 | 322-3 | 4 | Screw-HH |

| Ref. | Part Number | Qty. | Description |
|---|---|---|---|
| 14 | 104-8300 | 2 | Nut-Flange, NI |
| 15 | 32128-25 | 4 | Nut-HF |
| 16 | 120-5573 | 1 | Coolant Reservoir ASM |
| 16:1 | 87-7050 | 1 | Cap-Reservoir |
| 17 | 110-3257 | 1 | Hose-Fuel |
| 18 | 110-6187 | 1 | Hose-Fuel |
| 19 | 107069 | 4 | Clip |
| 20 | 92-2379 | 2 | Clamp-Hose |
| 21 | 125-2845 | 1 | Hose-Radiator, Lower |
| 22 | 104-8301 | 2 | Nut-Flange, NI |
| 23 | 117-4766 | 2 | Decal-Warning, Fan |
| 24 | 2412-111 | 1 | Clamp |

● See following pages

■ Not serviced separately

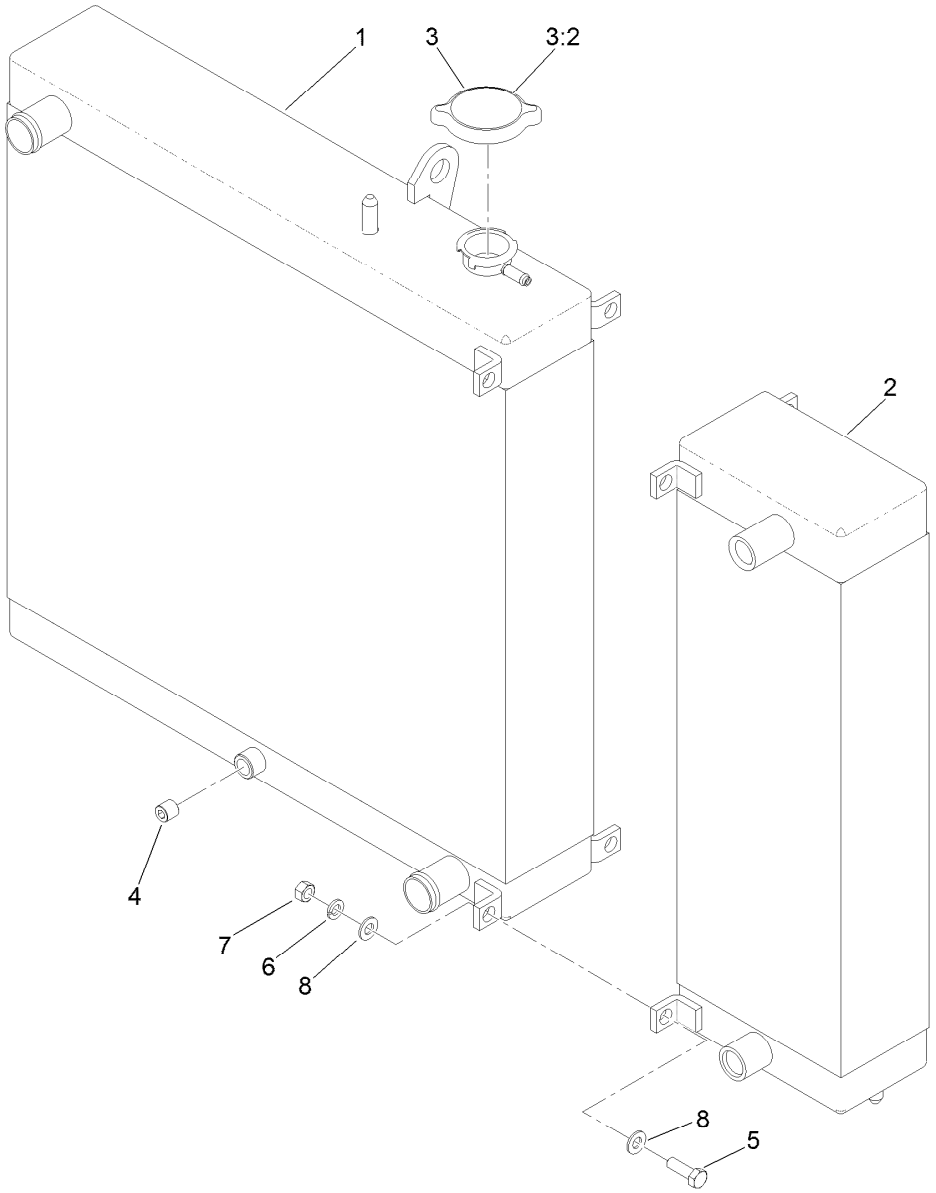


# Radiator and Cooler Assembly

| *Ref.* | *Part Number* | *Qty.* | *Description* |
|---|---|---|---|
| 1 | 125-4354 | 1 | Radiator |
| 2 | 125-4355 | 1 | Oil Cooler |
| 3 | 119-1430 | 1 | Radiator Cap ASM |
| 3:2 | 117-3276 | 1 | Decal-Danger |
| 4 | 99-8551 | 1 | Plug-Pipe |
| 5 | 322-5 | 4 | Screw-HH |
| 6 | 3253-4 | 4 | Washer-Lock |
| 7 | 3217-6 | 4 | Nut-Hex |
| 8 | 3256-23 | 4 | Washer-Flat |

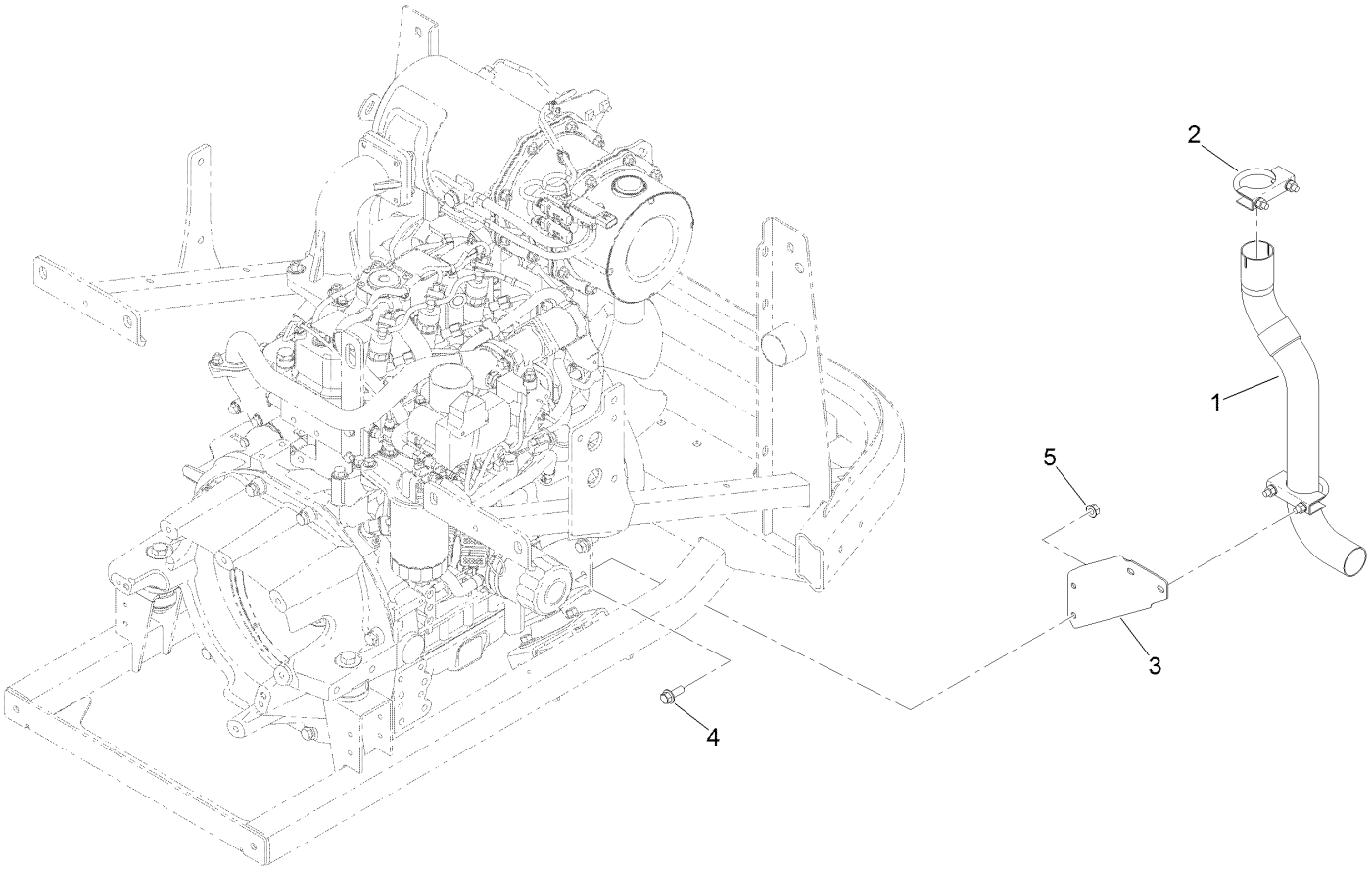


# Muffler Component Assembly

| *Ref.* | *Part Number* | *Qty.* | *Description* |
|---|---|---|---|
| 1 | 125-2844 | 1 | Pipe-Exhaust |
| 2 | 18-2130 | 2 | Clamp |
| 3 | 127-4860-03 | 1 | Bracket-Exhaust |
| 4 | 3234-42 | 2 | Screw-HHF |
| 5 | 32128-21 | 2 | Nut-HF |

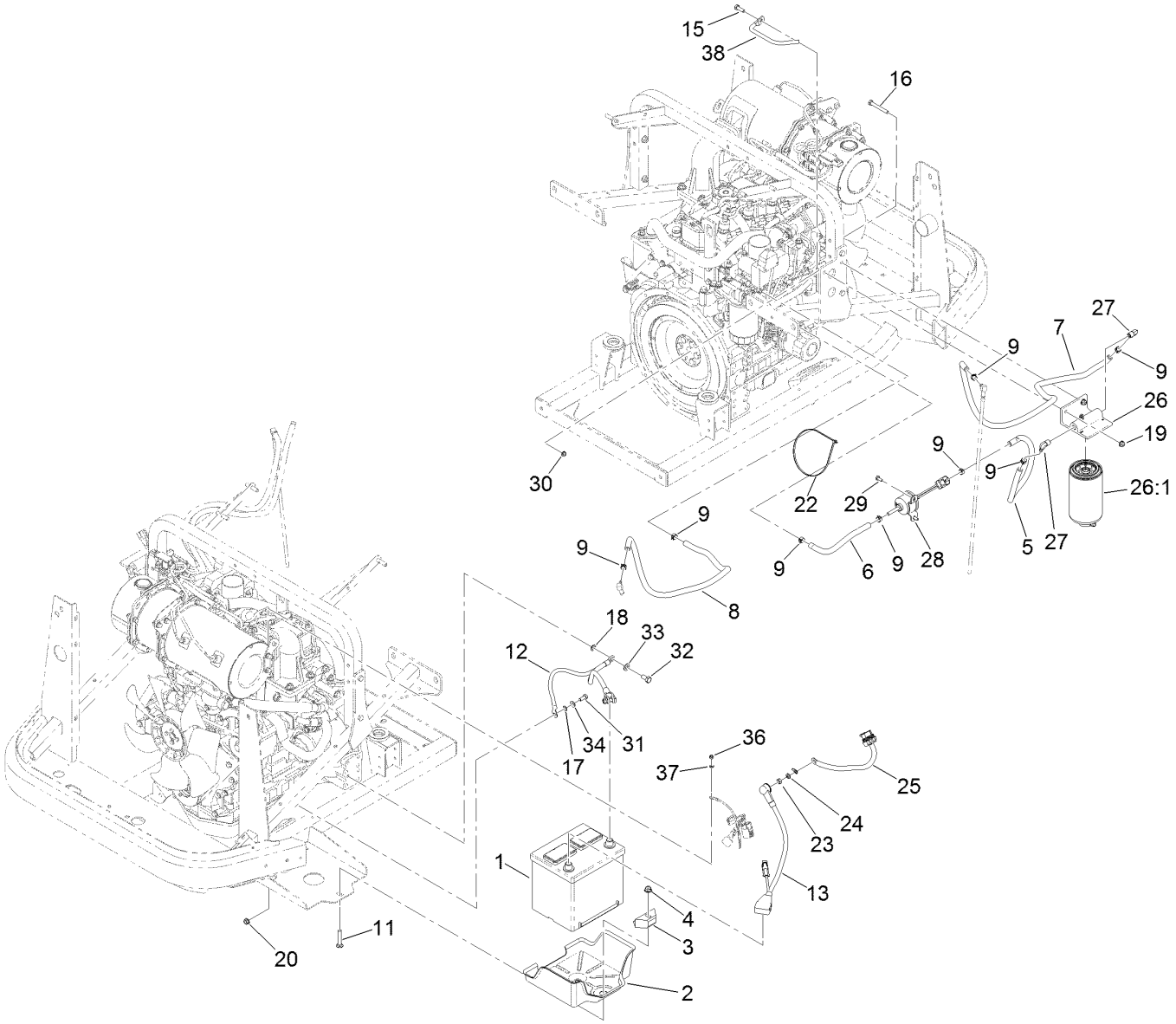


# Battery and Fuel Delivery Assembly

| Ref. | Part Number | Qty. | Description |
|---|---|---|---|
| 1 | 106-5187 | 1 | Battery-Dry |
| 2 | 127-4866 | 1 | Tray-Battery |
| 3 | 66-2490 | 1 | Retainer-Battery |
| 4 | 104-8301 | 1 | Nut-Flange, NI |
| 5 | 110-4109 | 1 | Hose-Fuel |
| 6 | 110-4124 | 1 | Hose-Fuel |
| 7 | 109-0277 | 1 | Hose-Fuel |
| 8 | 110-9662 | 1 | Hose-Fuel |
| 9 | 92-2379 | 8 | Clamp-Hose |
| 11 | 3231-6 | 1 | Screw-CARR |
| 12 | 122-0266 | 1 | Cable-Battery, Negative |
| 13 | 119-4378 | 1 | Cable-Battery, Positive |
| 15 | 322-5 | 1 | Screw-HH |
| 16 | 322-12 | 1 | Screw-HH |
| 17 | 3255-8 | 1 | Washer-Lock |
| 18 | 3255-9 | 1 | Washer-Lock |
| 19 | 104-8300 | 2 | Nut-Flange, NI |
| 20 | 32128-25 | 1 | Nut-HF |

| Ref. | Part Number | Qty. | Description |
|---|---|---|---|
| 22 | 3290-379 | 1 | Tie-Cable |
| 23 | 33014-00 | 1 | Nut-Hex |
| 24 | 3253-4 | 1 | Washer-Lock |
| 25 | 99-3441 | 1 | Harness-Wire, Fusible Link |
| 26 | 125-2914 | 1 | Separator Filter ASM |
| 26:1 | 125-2915 | 1 | Filter-Fuel/Water Separator |
| 27 | 353-781 | 2 | Fitting-Elbow |
| 28 | 121-5613 | 1 | Pump-Fuel, Electric |
| 29 | 321-3 | 2 | Screw-HH |
| 30 | 104-7201 | 2 | Nut-Flange, NI |
| 31 | 322-3 | 1 | Screw-HH |
| 32 | 33115-020 | 1 | Screw-HH |
| 33 | 3256-24 | 1 | Washer-Flat |
| 34 | 3256-23 | 1 | Washer-Flat |
| 36 | 33013-00 | 1 | Nut-Hex |
| 37 | 43-5930 | 1 | Washer-Lock, Spring |
| 38 | 131-3371 | 1 | Guide-Cable, Brake |

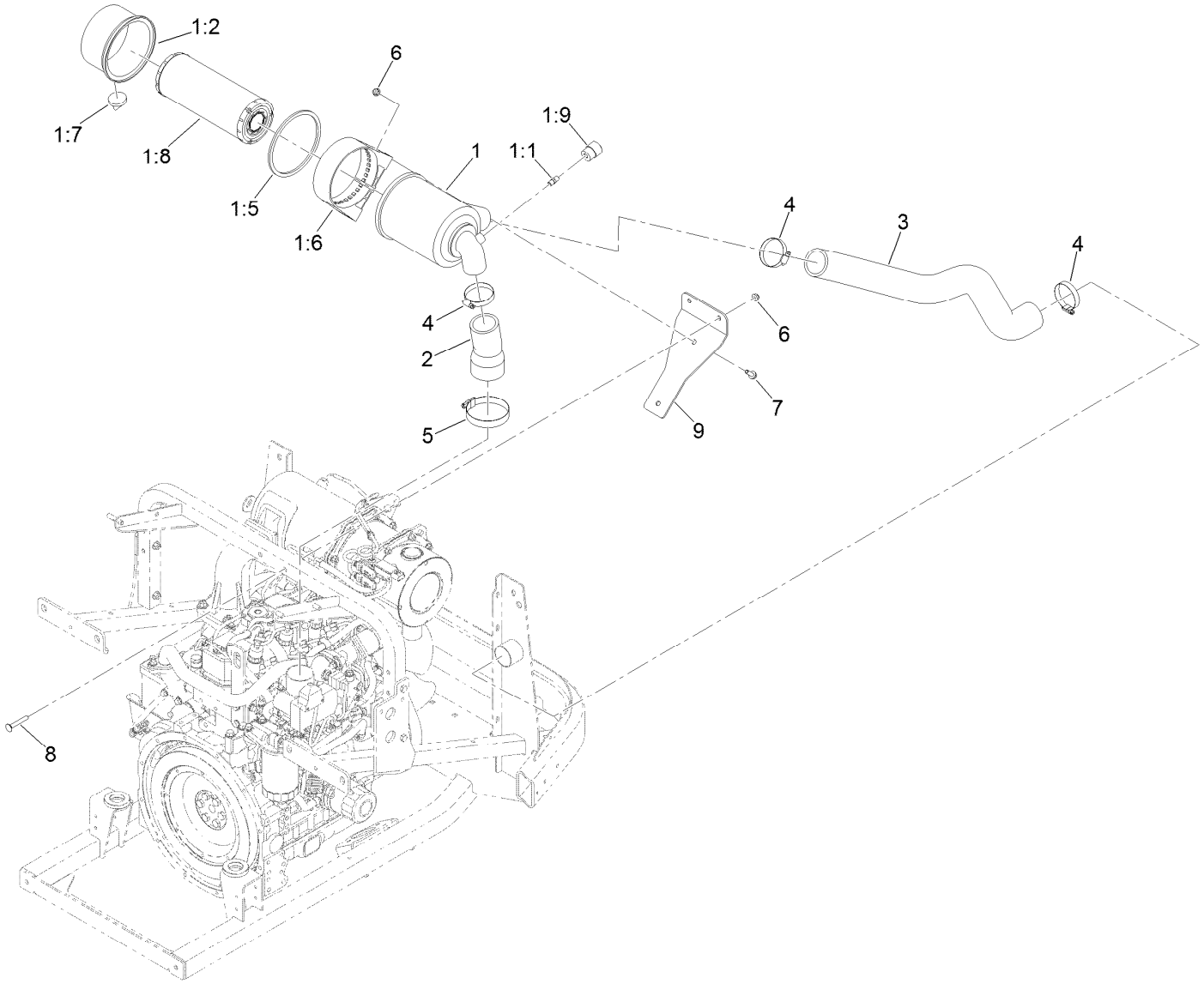


# Air Cleaner Assembly

| Ref. | Part Number | Qty. | Description |
|---|---|---|---|
| 1 | 104-3428 | 1 | Air Cleaner ASM |
| 1:1 | 105-4292 | 1 | Nipple-Pipe |
| 1:2 | 104-0497 | 1 | Cover |
| 1:5 | 104-4897 | 1 | Gasket |
| 1:6 | 98-4525 | 1 | Bracket-Cleaner, Air |
| 1:7 | 104-0498 | 1 | Valve-Vacuator |
| 1:8 | 108-3810 | 1 | Filter-Air |
| 1:9 | 93-9164 | 1 | Indicator-Mini |

| Ref. | Part Number | Qty. | Description |
|---|---|---|---|
| 2 | 125-2848 | 1 | Hose-Inlet, Air |
| 3 | 125-2849 | 1 | Hose-Draw, Air |
| 4 | 2412-130 | 3 | Clamp-Hose |
| 5 | 2412-125 | 1 | Clamp-Hose |
| 6 | 104-8300 | 4 | Nut-Flange, NI |
| 7 | 3234-17 | 2 | Screw-HHF |
| 8 | 3230-7 | 2 | Bolt-CARR |
| 9 | 125-2847-03 | 1 | Bracket-Cleaner, Air |

# Traction Pedal Assembly

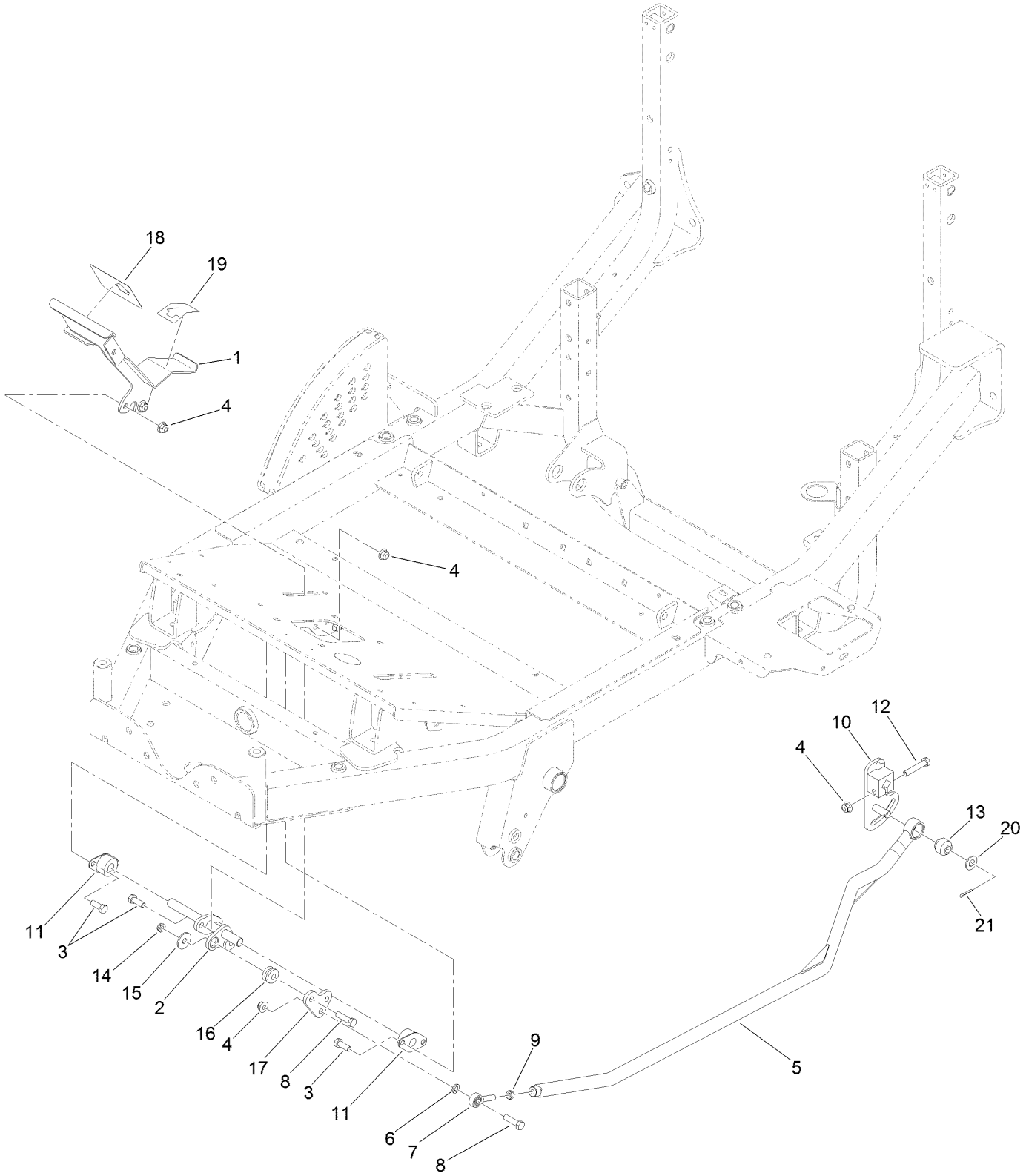

# Traction Pedal Assembly (continued)

| Ref. | Part Number | Qty. | Description |
|---|---|---|---|
| 1 | 117-3070-01 | 1 | Pedal |
| 2 | 125-4402 | 1 | Pivot-Pedal, Isolated |
| 3 | 323-6 | 6 | Screw-HH |
| 4 | 104-8301 | 8 | Nut-Flange, NI |
| 5 | 136-4451-03 | 1 | Rod-Traction |
| 6 | 3253-21 | 1 | Washer-Lock |
| 7 | 2411-36 | 1 | Bearing-End, Rod |
| 8 | 323-29 | 3 | Screw-HH |
| 9 | 3220-3 | 1 | Nut-HJ |
| 10 | 131-5546-03 | 1 | Lever-Traction |
| 11 | 256-236 | 2 | Bearing-Mount, Flange |
| 12 | 323-10 | 1 | Screw-HH |
| 13 | 23-2270 | 1 | Bushing-Rubber |
| 14 | 3296-59 | 2 | Nut-Lock, NI |
| 15 | 93-8806 | 2 | Washer-Hardened |
| 16 | 63-9750 | 2 | Mount |
| 17 | 136-4453 | 1 | Plate-Linkage, Traction |
| 18 | 94-3307 | 1 | Pad-Pedal, Traction |
| 19 | 94-3308 | 1 | Pad-Pedal, Traction |
| 20 | 3256-26 | 1 | Washer-Flat |
| 21 | 3272-10 | 1 | Pin-Cotter |

# Neutral System Assembly

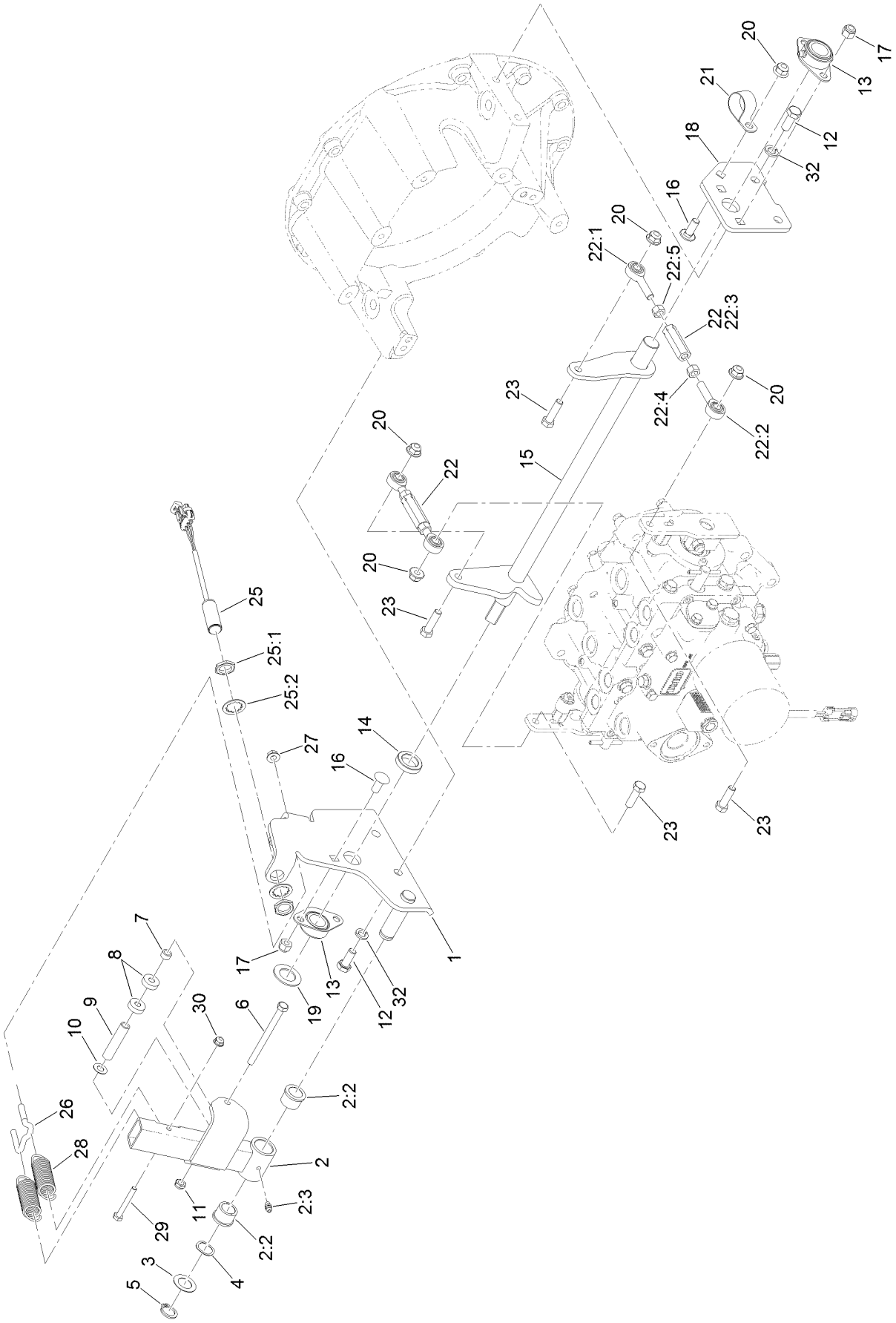

# Neutral System Assembly (continued)

| Ref. | Part Number | Qty. | Description |
|---|---|---|---|
| 1 | 136-4482-03 | 1 | Plate-End, Neutral |
| 2 | 125-4366 | 1 | Neutral Arm ASM |
| 2:2 | 256-113 | 2 | Bushing-Flange |
| 2:3 | 302-5 | 1 | Fitting-Grease |
| 3 | 3-6498 | 1 | Washer-Thrust |
| 4 | 119-4164 | 1 | Washer-Wave |
| 5 | 32120-93 | 1 | Ring-Retaining |
| 6 | 322-19 | 1 | Screw-HH |
| 7 | 136-4455 | 1 | Sleeve-Spacer |
| 8 | 121-6835 | 2 | Bearing-Ball |
| 9 | 136-4454 | 1 | Sleeve-Spacer |
| 10 | 73-0041 | 1 | Washer-Thrust |
| 11 | 3296-47 | 1 | Nut-Lock, NI |
| 12 | 120-9635 | 4 | Screw-HH |
| 13 | 131-5529 | 2 | Bearing, Side Flange |
| 14 | 125-2879 | 1 | Spacer-Shaft, Neutral |
| 15 | 131-5547-03 | 1 | Shaft-Neutral |
| 16 | 3231-27 | 5 | Screw-CARR |
| 17 | 3296-39 | 4 | Nut-Lock, NI |
| 18 | 125-2869-03 | 1 | Plate-End, Neutral |

| Ref. | Part Number | Qty. | Description |
|---|---|---|---|
| 19 | 119-2332 | 1 | Washer-Flat |
| 20 | 104-8301 | 5 | Nut-Flange, NI |
| 21 | 2412-126 | 1 | R-Clamp |
| 22 | 125-2870 | 2 | Link ASM |
| 22:1 | 125-4389 | 1 | Bearing-End, Rod |
| 22:2 | 2411-36 | 1 | Bearing-End, Rod |
| 22:3 | 125-4390 | 1 | Hex-Adjustment |
| 22:4 | 3219-3 | 1 | Nut-Hex |
| 22:5 | 3219-20 | 1 | Nut-Hex, LH |
| 23 | 323-29 | 4 | Screw-HH |
| 25 | 115-5300 | 1 | Proximity Switch ASM |
| 25:1 | 117-3207 | 2 | Nut-Hex |
| 25:2 | 117-3208 | 2 | Washer-Lock, Internal Tooth |
| 26 | 131-3376 | 1 | Hook-Spring, Dual |
| 27 | 32128-25 | 1 | Nut-HF |
| 28 | 131-3374 | 2 | Spring-Extension |
| 29 | 321-11 | 1 | Screw-HH |
| 30 | 104-7201 | 1 | Nut-Flange, NI |
| 32 | 48-9590 | 4 | Washer-Lock |

# Hood Assembly

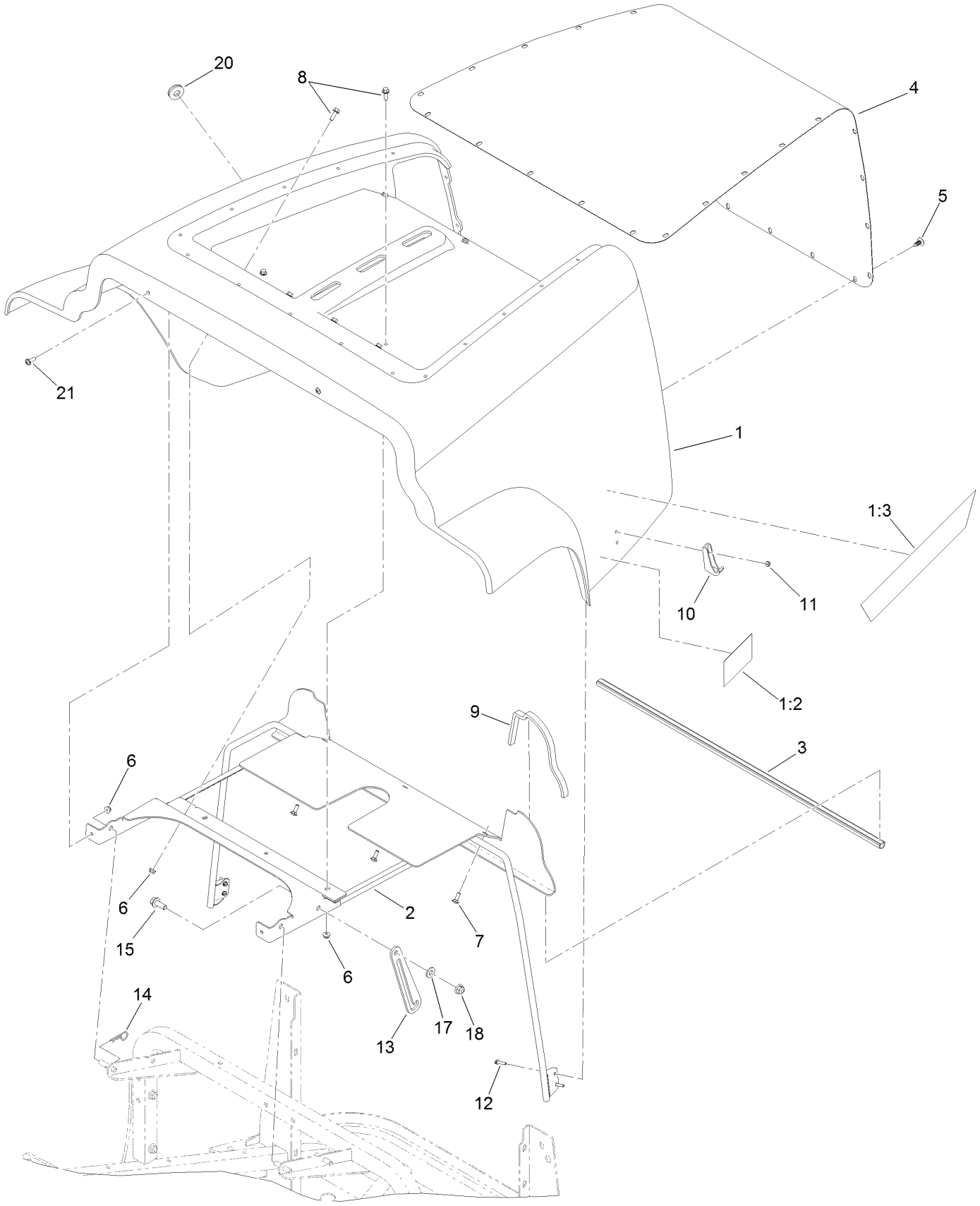

# Hood Assembly (continued)

| Ref. | Part Number | Qty. | Description |
|---|---|---|---|
| 1 | 127-4879 | 1 | Hood ASM |
| 1:2 | 117-3270 | 2 | Decal-Danger |
| 1:3 | 117-3279 | 2 | Decal-Hood |
| 2 | 136-4456-03 | 1 | Mount-Hood |
| 3 | 115-0423 | 1 | Seal-Bulb |
| 4 | 125-2881-03 | 1 | Screen-Hood |
| 5 | 117-2382 | 27 | Plug-Plastic |
| 6 | 104-7201 | 11 | Nut-Flange, NI |
| 7 | 3229-1 | 3 | Bolt-CARR |
| 8 | 3234-4 | 6 | Screw-HHF |
| 9 | 125-4449 | 2 | Seal-Foam |
| 10 | 103-2897 | 2 | Latch-Catch |
| 11 | 3296-2 | 4 | Nut-Lock, NI |
| 12 | 32105-13 | 4 | Screw-HWH |
| 13 | 125-2899-03 | 1 | Rod-Prop |
| 14 | 9335054 | 1 | Pin-Hair |
| 15 | 3234-42 | 1 | Screw-HHF |
| 17 | 66-2920 | 1 | Washer-Friction |
| 18 | 104-8301 | 1 | Nut-Flange, NI |
| 20 | 104-1453 | 1 | Grommet |
| 21 | 92-3911 | 2 | Screw-HSBH |

# Deck Lift Valve and Hydraulic Fitting Assembly

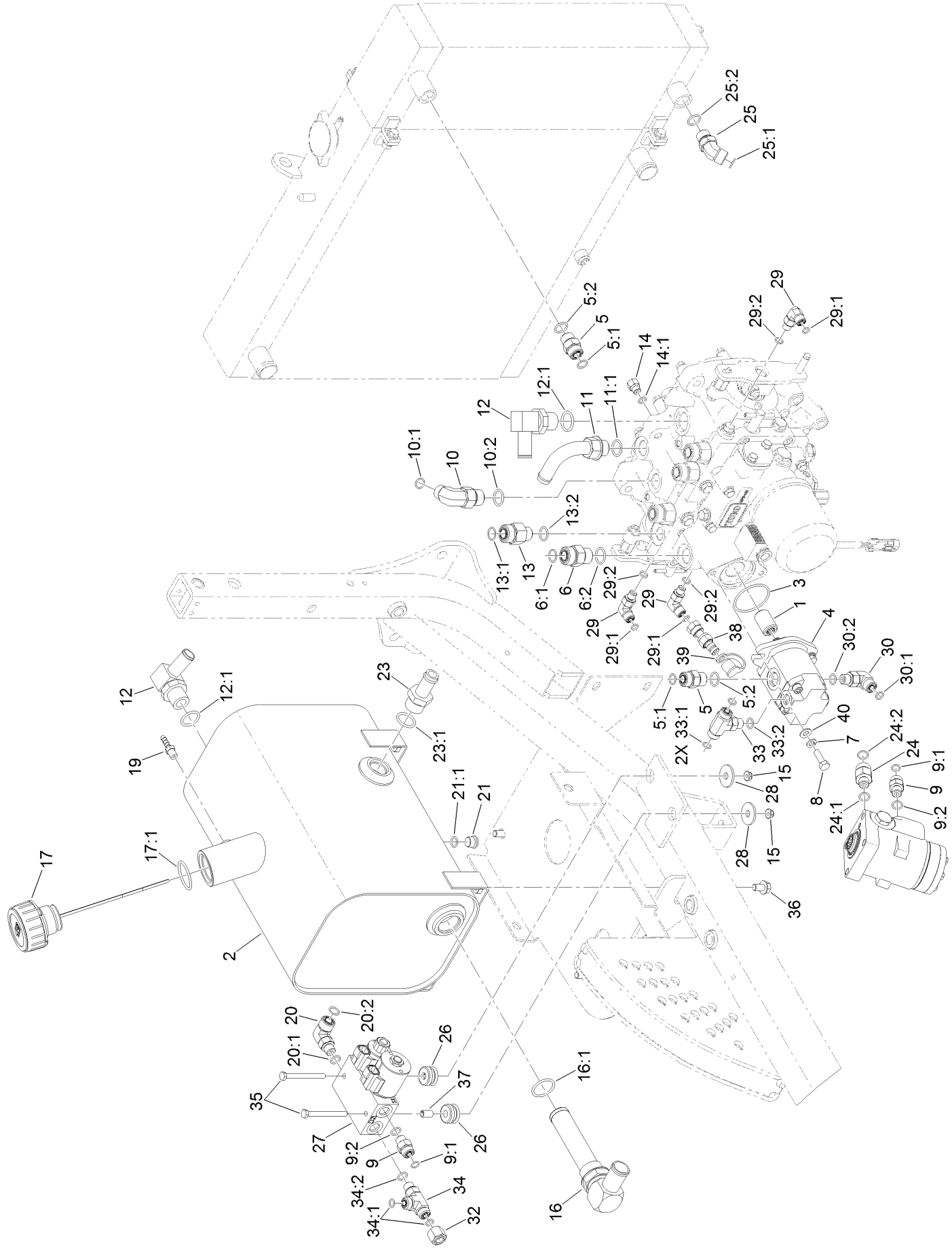

# Deck Lift Valve and Hydraulic Fitting Assembly (continued)

| Ref. | Part Number | Qty. | Description |
|---|---|---|---|
| 1 | 108-9920 | 1 | Coupler-Spline |
| 2 | 117-3372 | 1 | Tank-Hydraulic, Metal |
| 3 | 108-9919 | 1 | O-Ring |
| 4 | 115-0375 | 1 | Gear Pump ASM |
| 5 | 340-4 | 2 | Fitting-Str |
| 5:1 | 237-30 | 1 | O-Ring |
| 5:2 | 237-79 | 1 | O-Ring |
| 6 | 340-7 | 1 | Adapter |
| 6:1 | 237-65 | 1 | O-Ring |
| 6:2 | 237-80 | 1 | O-Ring |
| 7 | 3253-4 | 2 | Washer-Lock |
| 8 | 33114-025 | 2 | Screw-HH |
| 9 | 340-2 | 5 | Fitting-Str |
| 9:1 | 237-22 | 1 | O-Ring |
| 9:2 | 237-42 | 1 | O-Ring |
| 10 | 340-105 | 1 | Fitting-Elbow 90 |
| 10:1 | 237-80 | 1 | O-Ring |
| 10:2 | 237-30 | 1 | O-Ring |
| 11 | 110-5522 | 1 | Fitting-Elbow, 90 |
| 11:1 | 237-80 | 1 | O-Ring |
| 12 | 353-987 | 2 | Fitting-HYD, 90 DEG (Barbed) |
| 12:1 | 237-81 | 1 | O-Ring |
| 13 | 340-155 | 4 | Fitting-HYD, Straight |
| 13:1 | 237-79 | 1 | O-Ring |
| 13:2 | 237-151 | 1 | O-Ring |
| 14 | 110-5536 | 1 | Fitting-HYD, Adapter |
| 14:1 | 237-78 | 1 | O-Ring |
| 15 | 104-7201 | 2 | Nut-Flange, NI |
| 16 | 105-0204 | 1 | Strainer Fitting ASM |
| 16:1 | 237-146 | 1 | O-Ring |
| 17 | 117-3389 | 1 | Cap-Tank, Hydraulic |
| 17:1 | 237-101 | 1 | O-Ring |
| 19 | 304-73 | 1 | Fitting-Straight |
| 20 | 340-99 | 1 | Fitting-HYD, 90 DEG |
| 20:1 | 237-30 | 1 | O-Ring |
| 20:2 | 237-42 | 1 | O-Ring |
| 21 | 353-989 | 1 | Plug-Hex, Hollow |
| 21:1 | 237-42 | 1 | O-Ring |
| 23 | 354-73 | 1 | Fitting-Straight |
| 23:1 | 237-81 | 1 | O-Ring |
| 24 | 340-5 | 1 | Fitting-Straight |
| 24:1 | 237-42 | 1 | O-Ring |
| 24:2 | 237-30 | 1 | O-Ring |
| 25 | 340-101 | 1 | Fitting-HYD, 45 DEG |
| 25:1 | 237-30 | 1 | O-Ring |
| 25:2 | 237-79 | 1 | O-Ring |
| 26 | 63-9750 | 2 | Mount |
| 27 | 131-1934 | 1 | Deck Lift Valve ASM |
| 28 | 63-8410 | 2 | Washer |
| 29 | 340-132 | 3 | Fitting-HYD, 90 DEG |
| 29:1 | 237-78 | 1 | O-Ring |
| 29:2 | 237-21 | 1 | O-Ring |
| 30 | 340-77 | 1 | Fitting-Elbow 90 |
| 30:1 | 237-22 | 1 | O-Ring |
| 30:2 | 237-42 | 1 | O-Ring |
| 32 | 340-117 | 1 | Cap |
| 33 | 340-94 | 1 | Adapter |
| 33:1 | 237-22 | 2 | O-Ring |
| 33:2 | 237-42 | 1 | O-Ring |
| 34 | 340-86 | 1 | Fitting-Tee |
| 34:1 | 237-22 | 2 | O-Ring |
| 34:2 | 237-42 | 1 | O-Ring |
| 35 | 321-14 | 2 | Screw-HH |
| 36 | 32144-15 | 4 | Screw-HHFTF |
| 37 | 80-0650 | 2 | Spacer-Tubular |
| 38 | 115-8886 | 1 | Nipple-Test |
| 39 | 354-79 | 1 | Cap-Dust |
| 40 | 3256-23 | 2 | Washer-Flat |

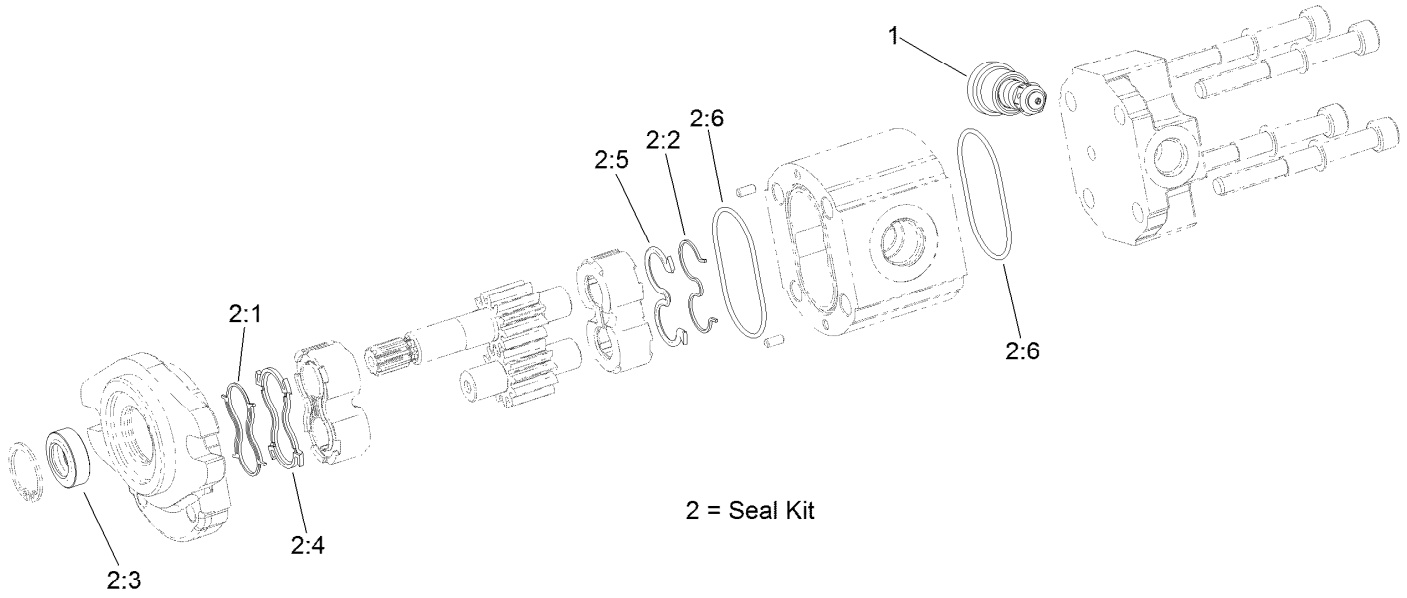


# Hydraulic Gear Pump Assembly No. 115-0375

| *Ref.* | *Part Number* | *Qty.* | *Description* |
|---|---|---|---|
| 1 | 115-0376 | 1 | Valve-Relief, 125 BAR |
| 2 | 112-0199 | 1 | Seal Kit |
| 2:1 | | 1 | Seal-Anti Extrusion ● |
| 2:2 | | 1 | Seal-Anti Extrusion ● |
| 2:3 | | 1 | Seal-Shaft ● |
| 2:4 | | 1 | Seal-Upper ● |
| 2:5 | | 1 | Seal ● |
| 2:6 | | 2 | O-Ring ● |

● Not serviced separately

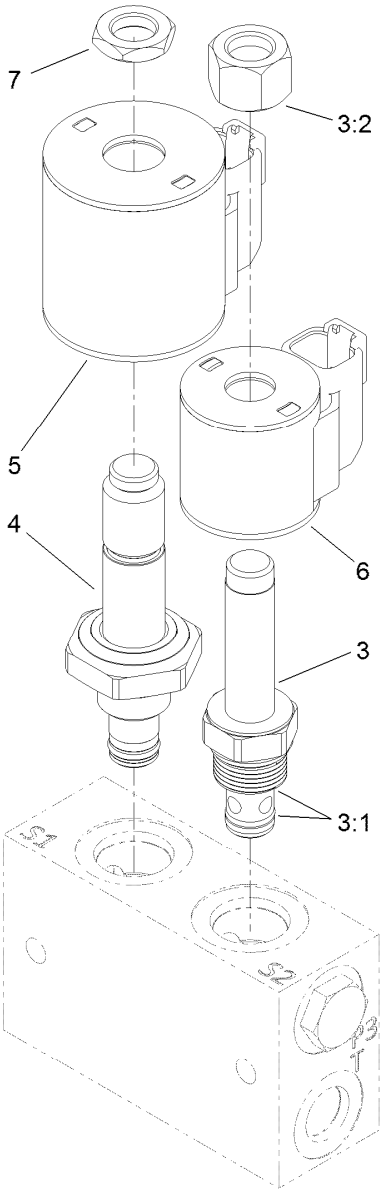


# Valve Assembly No. 131-1934

| Ref. | Part Number | Qty. | Description |
|---|---|---|---|
| 3 | 107-7517 | 1 | Valve-Solenoid |
| 3:1 | 105-9156 | 1 | Seal Kit |
| 3:2 | 107-7812 | 1 | Nut-Solenoid |
| 4 | 131-1935 | 1 | Valve-Solenoid |
| 5 | 115-3021 | 1 | Coil-12V |
| 6 | 119-8036 | 1 | Coil |
| 7 | 110-2634 | 1 | Nut-Coil |

# 4 Wheel Drive Hydraulic Hose Assembly

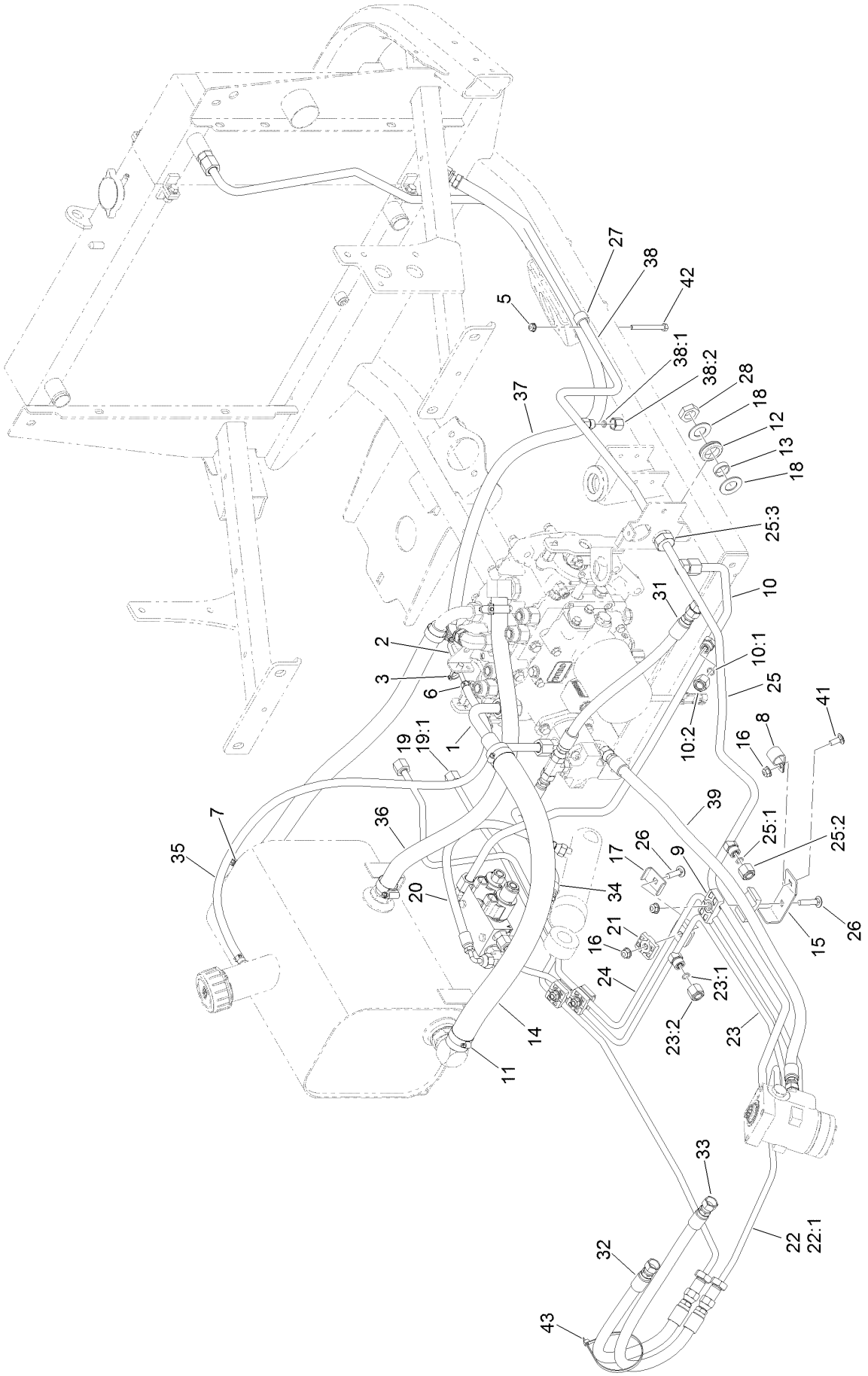

# 4 Wheel Drive Hydraulic Hose Assembly (continued)

| Ref. | Part Number | Qty. | Description |
|---|---|---|---|
| 1 | 115-0184 | 1 | Suction Tube ASM |
| 2 | 125-2891 | 1 | Tube ASM |
| 3 | 32180-030 | 1 | Clip-Tie |
| 5 | 104-7201 | 1 | Nut-Flange, NI |
| 6 | 2412-98 | 2 | Clamp-Hose |
| 7 | 2412-129 | 4 | Clamp-Hose |
| 8 | 2412-4 | 1 | Clamp |
| 9 | 56-7972 | 2 | Clamp-Tube |
| 10 | 125-2893 | 1 | Tube ASM |
| 10:1 | 237-22 | 1 | O-Ring |
| 10:2 | 340-117 | 1 | Cap |
| 11 | 2412-34 | 2 | Clamp-Hose |
| 12 | 240-5 | 1 | Grommet |
| 13 | 69-8960 | 1 | Spacer |
| 14 | 117-3200 | 1 | Hose-Suction |
| 15 | 120-0245 | 1 | Bracket-Support |
| 16 | 104-8300 | 5 | Nut-Flange, NI |
| 17 | 119-1418 | 6 | Plate-Clamp, Short |
| 18 | 69-8930 | 2 | Washer |
| 19 | 131-3358 | 1 | Steer Manifold/Front CYL Tube ASM |
| 19:1 | 237-22 | 1 | O-Ring |
| 20 | 110-0928 | 1 | Hose-HYD |
| 21 | 56-7973 | 6 | Clamp-Tube |
| 22 | 125-2887 | 1 | Steer/Front Tube ASM |
| 22:1 | 237-22 | 1 | O-Ring |
| 23 | 125-2890 | 1 | Steer/Lift Tube ASM |
| 23:1 | 237-22 | 1 | O-Ring |
| 23:2 | 340-117 | 1 | Cap |
| 24 | 131-3351 | 1 | Steer/Steer Manifold Tube ASM |
| 25 | 127-4872 | 1 | Steer/Drain Tube ASM |
| 25:1 | 237-22 | 2 | O-Ring |
| 25:2 | 340-117 | 1 | Cap |
| 25:3 | 237-30 | 2 | O-Ring |
| 26 | 3230-4 | 4 | Screw-CARR |
| 27 | 2412-87 | 1 | Clamp-Cable |
| 28 | 340-127 | 1 | Nut-Bulkhead |
| 31 | 117-3122 | 1 | Hose ASM |
| 32 | 119-1433 | 1 | Hose ASM |
| 33 | 100-5629 | 1 | Hose ASM |
| 34 | 117-3123 | 1 | HYD Hose ASM |
| 35 | 109-0275 | 1 | Hose-Fuel |
| 36 | 117-3121 | 2 | Hose ASM |
| 37 | 117-9937 | 1 | HYD Hose ASM |
| 38 | 125-2892 | 1 | Drain/Cooler Tube ASM |
| 38:1 | 237-21 | 1 | O-Ring |
| 38:2 | 117-3297 | 1 | Fitting-Cap |
| 39 | 119-8114 | 1 | HYD Hose ASM |
| 41 | 3230-23 | 1 | Screw-CARR |
| 42 | 321-15 | 1 | Screw-HH |
| 43 | 3334-945 | 1 | Tie-Cable |

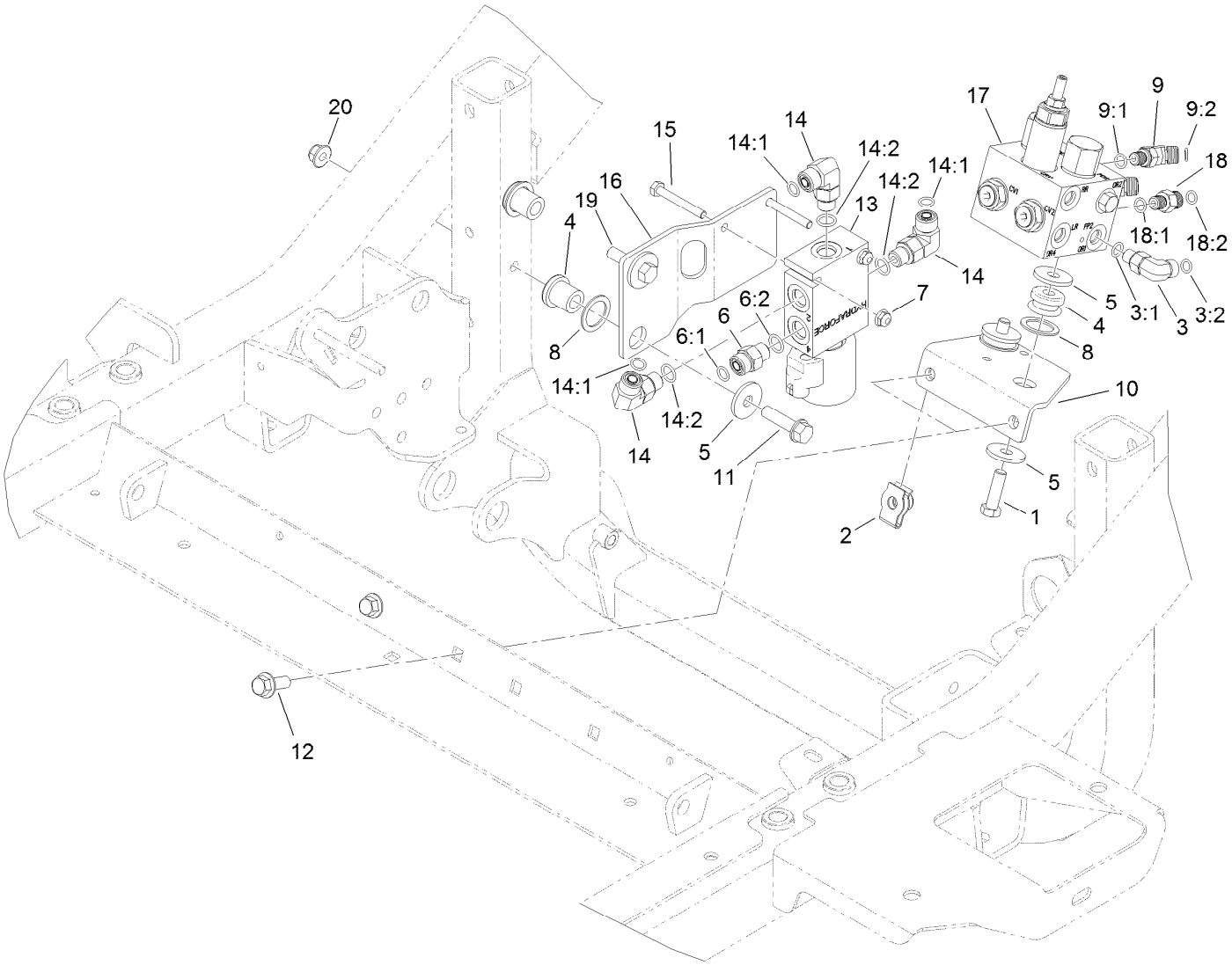


# Hydraulic Valve Assembly

| Ref. | Part Number | Qty. | Description |
|---|---|---|---|
| 1 | 323-7 | 2 | Screw-HH |
| 2 | 105-4886 | 2 | Nut-Tinnerman |
| 3 | 340-132 | 1 | Fitting-HYD, 90 DEG |
| 3:1 | 237-78 | 1 | O-Ring |
| 3:2 | 237-21 | 1 | O-Ring |
| 4 | 63-9750 | 4 | Mount |
| 5 | 63-8410 | 6 | Washer |
| 6 | 340-2 | 1 | Fitting-Str |
| 6:1 | 237-22 | 1 | O-Ring |
| 6:2 | 237-42 | 1 | O-Ring |
| 7 | 104-7201 | 2 | Nut-Flange, NI |
| 8 | 1-303352 | 4 | Washer-Spindle |
| 9 | 340-103 | 2 | Fitting-HYD, 45 DEG |
| 9:1 | 237-78 | 1 | O-Ring |
| 9:2 | 237-21 | 1 | O-Ring |
| 10 | 119-1409-03 | 1 | Mount-Plate |

| Ref. | Part Number | Qty. | Description |
|---|---|---|---|
| 11 | 323-20 | 1 | Screw-HH |
| 12 | 3234-42 | 2 | Screw-HHF |
| 13 | 115-0280 | 1 | Steer Selector Valve ASM |
| 14 | 340-77 | 3 | Fitting-Elbow 90 |
| 14:1 | 237-22 | 1 | O-Ring |
| 14:2 | 237-42 | 1 | O-Ring |
| 15 | 321-11 | 2 | Screw-HH |
| 16 | 131-3352-03 | 1 | Plate-Mount, Valve |
| 17 | 117-2247 | 1 | Cross-Trax Traction Valve ASM |
| 18 | 340-92 | 1 | Fitting-Str |
| 18:1 | 237-78 | 1 | O-Ring |
| 18:2 | 237-21 | 1 | O-Ring |
| 19 | 323-8 | 1 | Screw-HH |
| 20 | 104-8301 | 2 | Nut-Flange, NI |

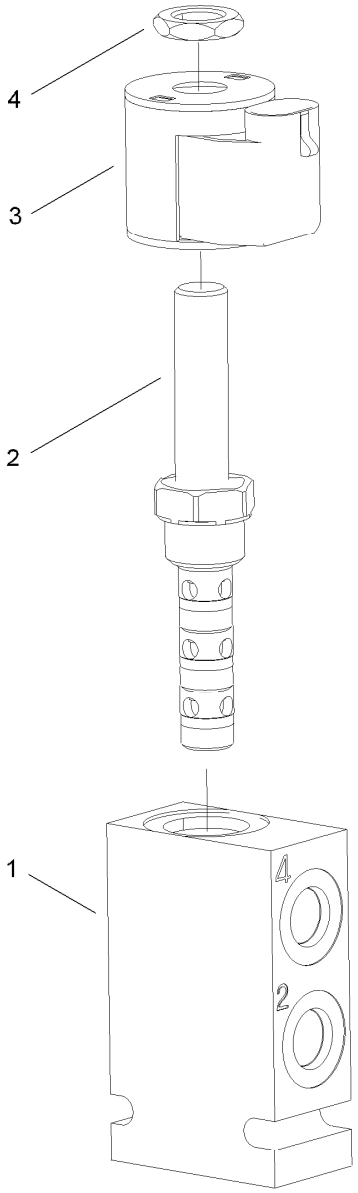


# Steering Selector Valve Assembly No. 115-0280

| *Ref.* | *Part Number* | *Qty.* | *Description* |
|---|---|---|---|
| 1 | | 1 | Block-Manifold ● |
| 2 | 119-8042 | 1 | Valve-Solenoid |
| 3 | 110-6344 | 1 | Coil-12V, Dc |
| 4 | 110-2634 | 1 | Nut-Coil |

● Not serviced separately

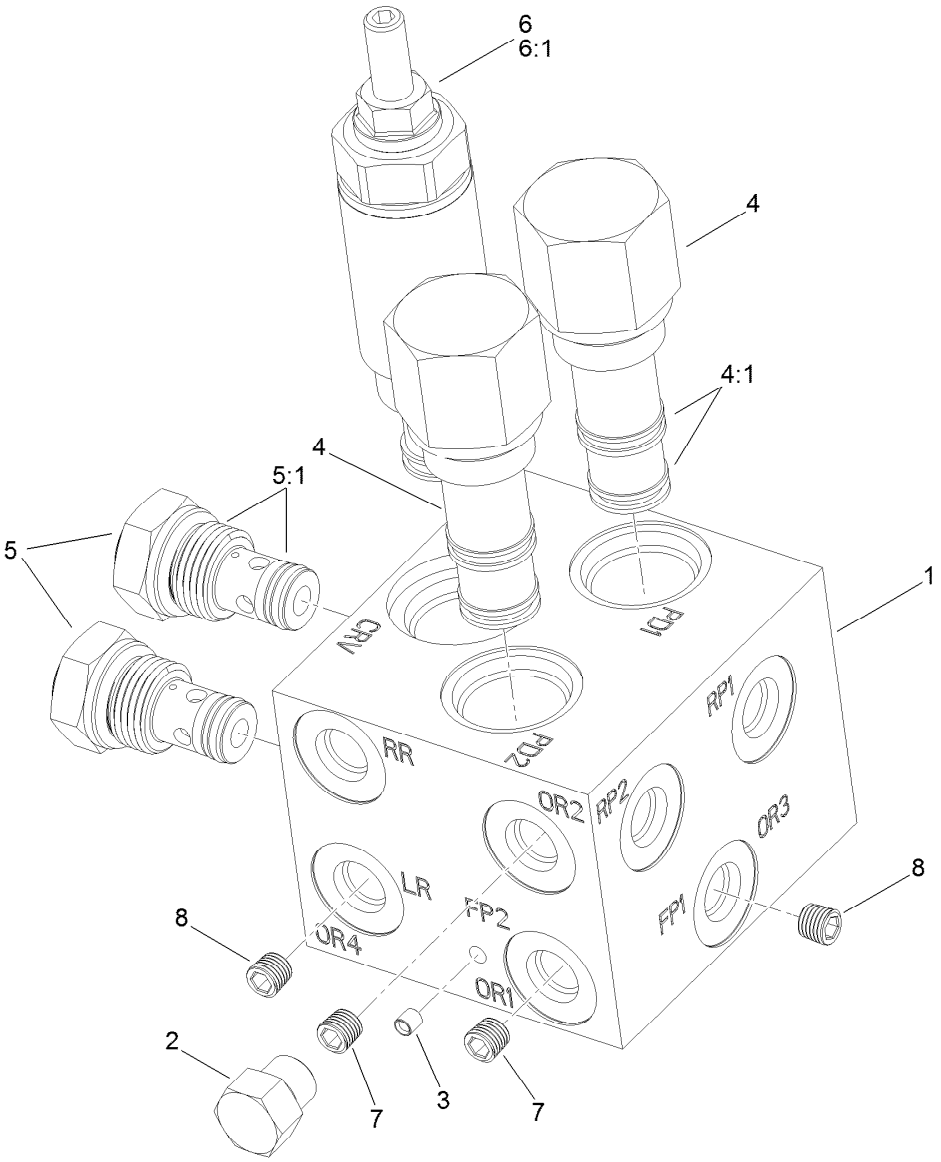


# Cross-Trax Traction Valve Assembly No. 117-2247

| *Ref.* | *Part Number* | *Qty.* | *Description* |
|---|---|---|---|
| 1 | | 1 | Block-Manifold ● |
| 2 | 117-0115 | 1 | Plug |
| 3 | | 1 | Plug-4Mm ● |
| 4 | 119-8028 | 2 | Valve-Pilot, Directional |
| 4:1 | 119-8029 | 1 | Pilot Valve Seal Kit |
| 5 | 119-8030 | 2 | Valve-Check |
| 5:1 | 119-8031 | 1 | Seal Kit-Check Valve |
| 6 | 119-8032 | 1 | Valve-Relief |
| 6:1 | 119-8033 | 1 | Relief Valve Seal Kit |
| 7 | 119-8034 | 2 | Orifice-.090 |
| 8 | 119-8035 | 2 | Orifice-.040 |

● Not serviced separately

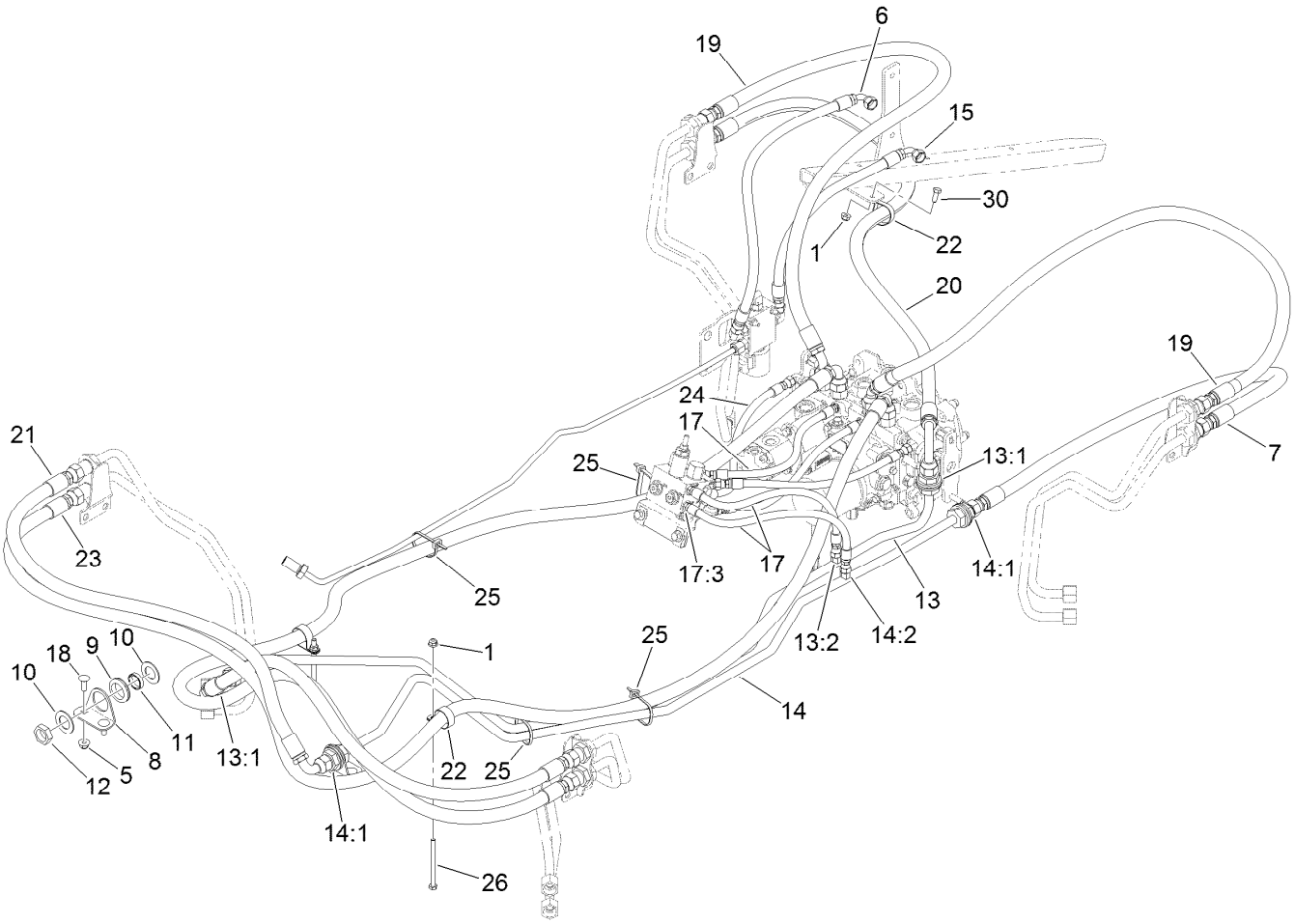


# Steering and Traction Hose Assembly

| Ref. | Part Number | Qty. | Description |
|---|---|---|---|
| 1 | 104-8300 | 3 | Nut-Flange, NI |
| 5 | 104-8301 | 4 | Nut-Flange, NI |
| 6 | 131-3354 | 1 | Hose ASM |
| 7 | 119-1435 | 1 | Hose ASM |
| 8 | 115-0479 | 2 | Bracket-Bulkhead |
| 9 | 240-3 | 4 | Grommet-Rubber |
| 10 | 69-9010 | 8 | Washer |
| 11 | 125-1984 | 4 | Spacer |
| 12 | 340-74 | 4 | Nut-Lock, Bulkhead |
| 13 | 125-4357 | 1 | Tube ASM-Front Trax, RH |
| 13:1 | 237-65 | 2 | O-Ring |
| 13:2 | 237-20 | 1 | O-Ring |
| 14 | 117-3116 | 1 | Tube ASM-Front Trax, LH |
| 14:1 | 237-65 | 2 | O-Ring |

| Ref. | Part Number | Qty. | Description |
|---|---|---|---|
| 14:2 | 237-21 | 1 | O-Ring |
| 15 | 131-3353 | 1 | Hose ASM |
| 17 | 115-0377 | 4 | Hose ASM |
| 17:3 | 237-78 | 1 | O-Ring |
| 18 | 3231-22 | 4 | Screw-CARR |
| 19 | 125-4406 | 2 | Hose ASM |
| 20 | 133-4747 | 1 | HYD Hose ASM |
| 21 | 117-3124 | 2 | Hose ASM |
| 22 | 2412-74 | 3 | R-Clamp |
| 23 | 117-3126 | 2 | Hose ASM |
| 24 | 117-3127 | 2 | Hose ASM |
| 25 | 3334-945 | 2 | Tie-Cable |
| 26 | 322-19 | 2 | Screw-HH |
| 30 | 322-3 | 1 | Screw-HH |

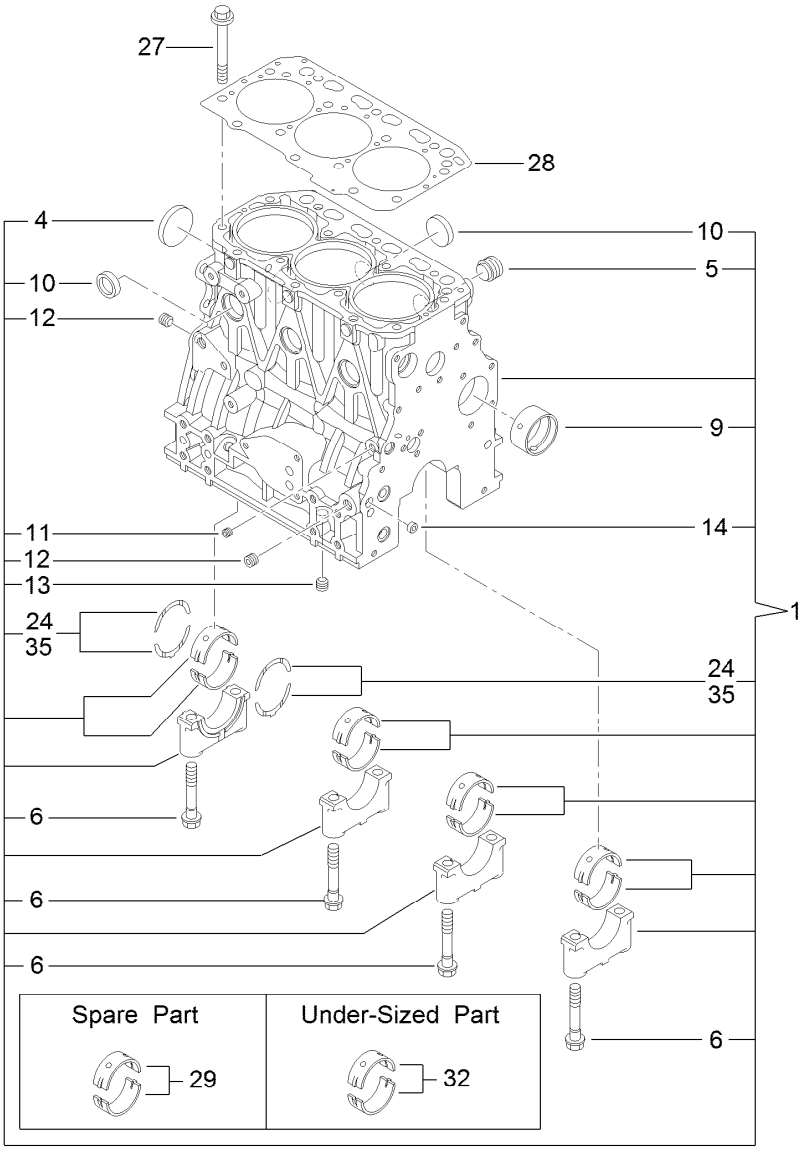


# Cylinder Block Assembly

| Ref. | Part Number | Qty. | Description |
|---|---|---|---|
| 1 | 127-4717 | 1 | Cylinder Block ASM |
| 4 | 125-6980 | 1 | Plug |
| 5 | 125-7170 | 1 | Plug |
| 6 | 125-7007 | 8 | Bolt |
| 9 | 125-7108 | 1 | Bushing |
| 10 | 125-7239 | 6 | Plug |
| 11 | 125-6969 | 1 | Plug |
| 12 | 125-6973 | 2 | Plug |

| Ref. | Part Number | Qty. | Description |
|---|---|---|---|
| 13 | 125-6973 | 1 | Plug |
| 14 | 125-7237 | 1 | Plug |
| 24 | 125-7010 | 2 | Metal-Thrust |
| 27 | 125-7006 | 14 | Bolt |
| 28 | 127-4716 | 1 | Head Gasket ASM |
| 29 | 125-6981 | 4 | Metal-Main |
| 32 | 125-7009 | 4 | Metal-Main (0.25) |
| 35 | 125-7011 | 1 | Metal-Thrust (0.25) |

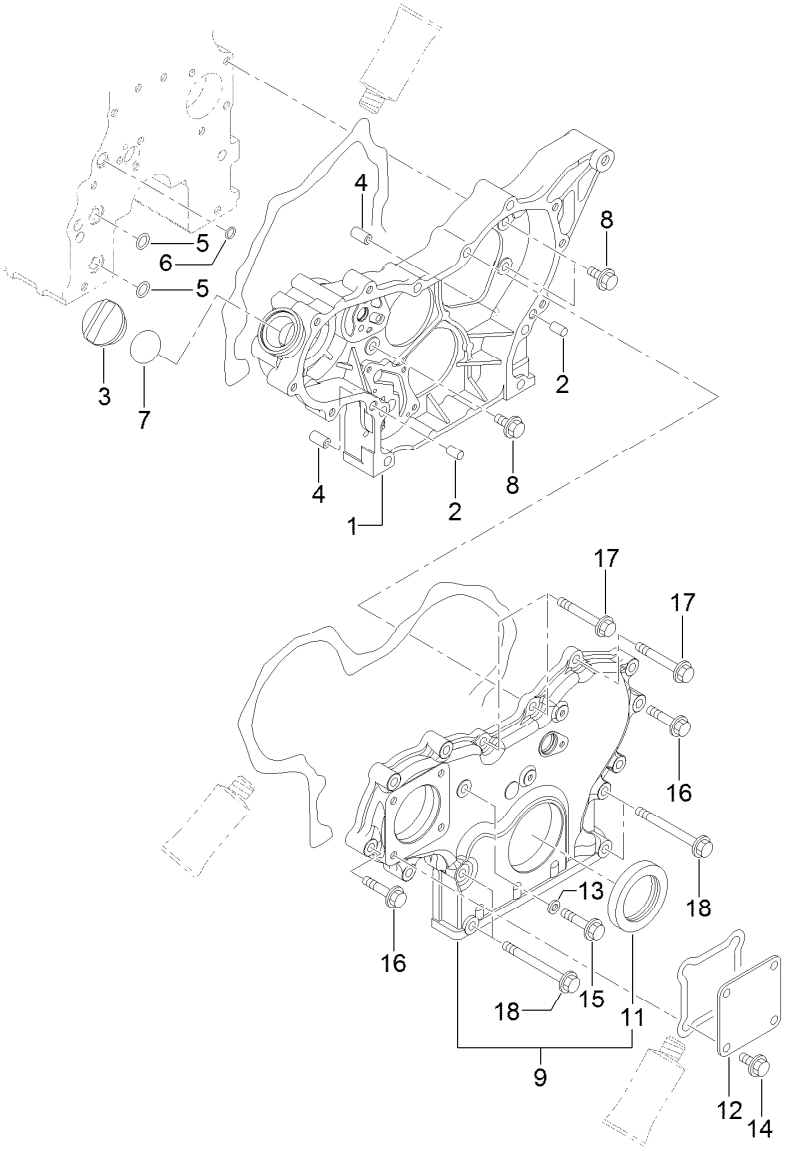


# Gear Housing Assembly

| Ref. | Part Number | Qty. | Description |
|---|---|---|---|
| 1 | 127-3023 | 1 | Case-Gear |
| 2 | 125-6995 | 2 | Pin |
| 3 | 125-6972 | 1 | Cover-Filler |
| 4 | 125-7107 | 2 | Pipe |
| 5 | 125-6909 | 2 | O-Ring |
| 6 | 127-2973 | 1 | O-Ring |
| 7 | 125-7197 | 1 | O-Ring |
| 8 | 125-7214 | 3 | Bolt |
| 9 | 127-3024 | 1 | Gearcase Cover ASM |

| Ref. | Part Number | Qty. | Description |
|---|---|---|---|
| 11 | 125-6944 | 1 | Seal-Oil |
| 12 | 125-6977 | 1 | Cover |
| 13 | 125-7174 | 1 | Washer-Seal |
| 14 | 125-7214 | 4 | Bolt |
| 15 | 125-7217 | 1 | Bolt |
| 16 | 125-7218 | 7 | Bolt |
| 17 | 125-7222 | 3 | Bolt |
| 18 | 125-7224 | 4 | Bolt |

# Flywheel Housing and Oil Sump Assembly

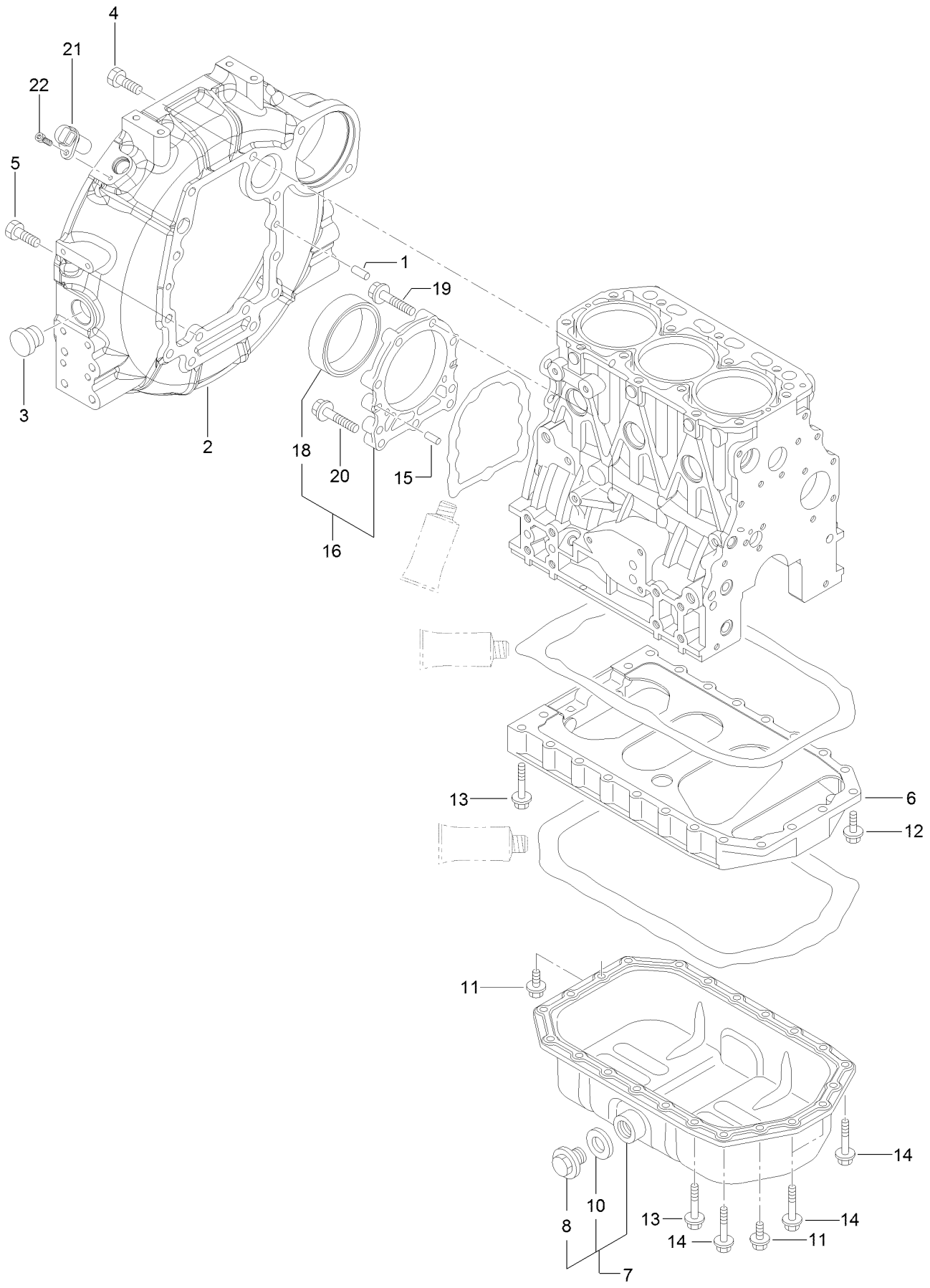

# Flywheel Housing and Oil Sump Assembly (continued)

| Ref. | Part Number | Qty. | Description |
|---|---|---|---|
| 1 | 125-6995 | 2 | Pin |
| 2 | 127-4758 | 1 | Housing-Flywheel |
| 3 | 125-6910 | 1 | Cap |
| 4 | 125-7226 | 6 | Bolt |
| 5 | 125-7227 | 4 | Bolt |
| 6 | 127-3756 | 1 | Spacer |
| 7 | 131-2706 | 1 | Oil Sump ASM |
| 8 | 125-6912 | 1 | Plug-Drain |
| 10 | 125-7177 | 1 | Washer-Seal |
| 11 | 125-7214 | 4 | Bolt |
| 12 | 125-7215 | 2 | Bolt |
| 13 | 125-7219 | 16 | Bolt |
| 14 | 125-7220 | 4 | Bolt |
| 15 | 125-6995 | 2 | Pin |
| 16 | 125-6996 | 1 | Case ASM |
| 18 | 125-7106 | 1 | Seal-Oil |
| 19 | 125-7045 | 6 | Bolt |
| 20 | 125-7217 | 3 | Bolt |
| 21 | 127-3062 | 1 | Sensor-Rev, Flywheel |
| 22 | 127-3184 | 1 | Bolt |

# Cylinder Head and Cover Assembly

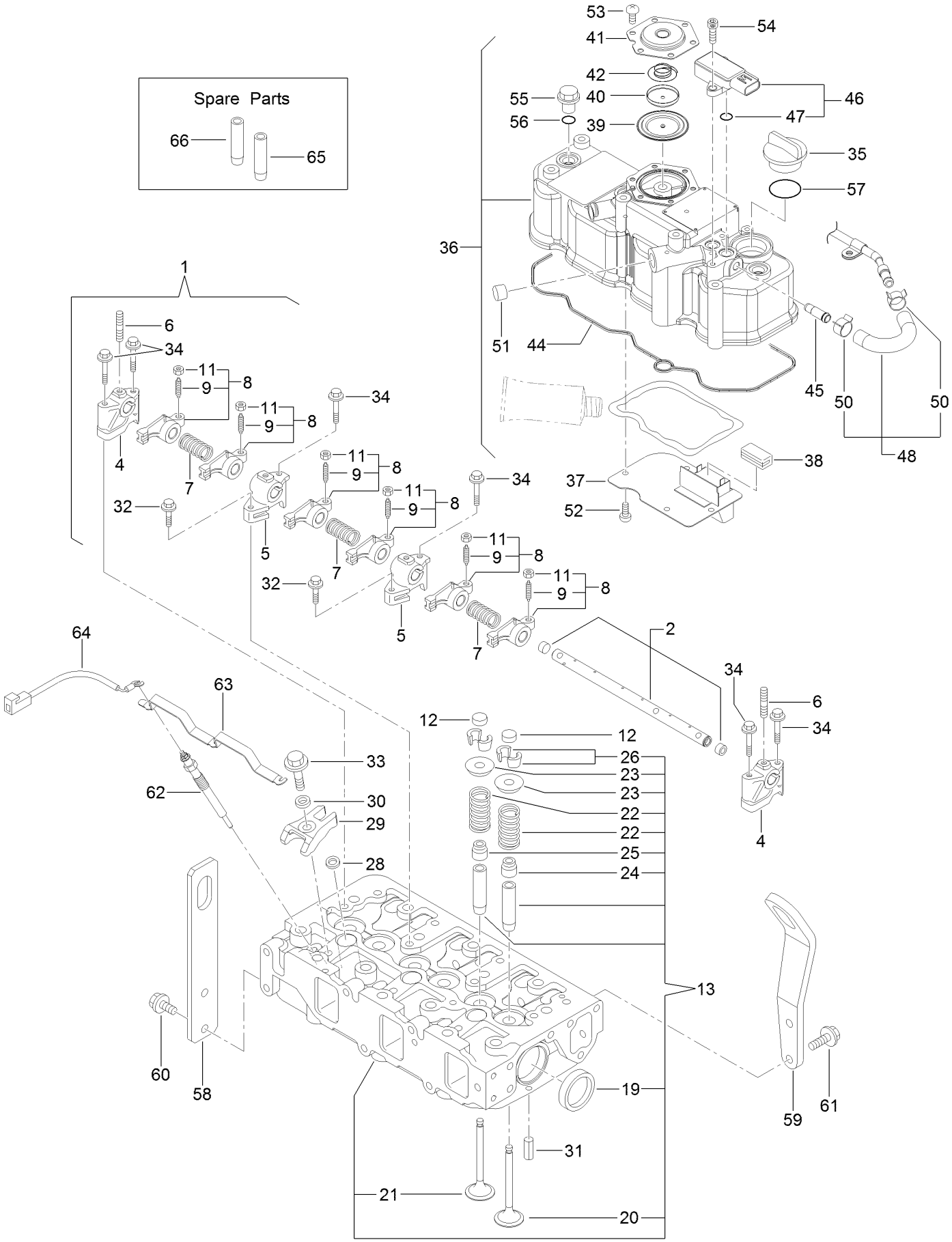

# Cylinder Head and Cover Assembly (continued)

| Ref. | Part Number | Qty. | Description |
|---|---|---|---|
| 1 | 127-3757 | 1 | Shaft ASM |
| 2 | 127-3758 | 1 | Shaft |
| 4 | 127-2974 | 2 | Support |
| 5 | 127-2975 | 2 | Support |
| 6 | 127-3759 | 3 | Stud |
| 7 | 127-2995 | 3 | Spring |
| 8 | 127-2989 | 6 | Arm-Rocker |
| 9 | 125-7013 | 6 | Screw-Adjust, Valve |
| 11 | 125-7014 | 6 | Nut |
| 12 | 127-2996 | 6 | Cap-Valve |
| 13 | 127-4720 | 1 | Cylinder Head ASM |
| 19 | 125-7240 | 2 | Plug |
| 20 | 127-2990 | 3 | Valve |
| 21 | 127-4710 | 3 | Valve |
| 22 | 127-3012 | 6 | Spring |
| 23 | 127-3013 | 6 | Retainer-Spring |
| 24 | 127-2986 | 3 | Seal-Stem, Valve |
| 25 | 127-3027 | 3 | Seal-Stem, Valve |
| 26 | 127-3186 | 6 | Pin-Cotter |
| 28 | 127-3021 | 3 | Gasket-Injector |
| 29 | 127-3028 | 3 | Retainer-Injector |
| 30 | 127-2980 | 3 | Washer-Injector |
| 31 | 125-7184 | 2 | Pin-Spring |
| 32 | 125-7215 | 2 | Bolt |
| 33 | 125-7217 | 3 | Bolt |
| 34 | 125-7220 | 6 | Bolt |
| 35 | 125-6972 | 1 | Cover-Filler |
| 36 | 127-4719 | 1 | Cylinder Head Cover ASM |

| Ref. | Part Number | Qty. | Description |
|---|---|---|---|
| 37 | 127-2988 | 1 | Plate |
| 38 | 125-7012 | 1 | Baffle |
| 39 | 125-6959 | 1 | Diaphragm |
| 40 | 125-6960 | 1 | Plate |
| 41 | 125-6961 | 1 | Plate-Breather |
| 42 | 125-6962 | 1 | Spring-Diaphragm |
| 44 | 127-3856 | 1 | Gasket-Head, Cylinder |
| 45 | 127-3026 | 1 | Joint |
| 46 | 127-3029 | 1 | Sensor-Pressure |
| 47 | 127-3032 | 2 | O Ring-Sensor, Pressure |
| 48 | 127-3040 | 1 | Hose ASM |
| 50 | 127-3041 | 2 | Clip-Hose |
| 51 | 125-6913 | 1 | Plug |
| 52 | 125-7186 | 4 | Screw |
| 53 | 125-7186 | 6 | Screw |
| 54 | 127-3184 | 2 | Bolt |
| 55 | 125-6974 | 3 | Knob |
| 56 | 93-0418 | 3 | O-Ring |
| 57 | 125-7197 | 1 | O-Ring |
| 58 | 131-2707 | 1 | Lifter |
| 59 | 131-2715 | 1 | Lifter-Engine |
| 60 | 125-7214 | 2 | Bolt |
| 61 | 127-7595 | 2 | Decal-Oil Level |
| 62 | 127-2991 | 3 | Plug-Glow |
| 63 | 127-3768 | 1 | Connector-Plug, Glow |
| 64 | 131-2704 | 1 | Harness-Wire |
| 65 | 127-2979 | 3 | Guide |
| 66 | 127-2997 | 3 | Guide-Valve |

# Suction Manifold Assembly

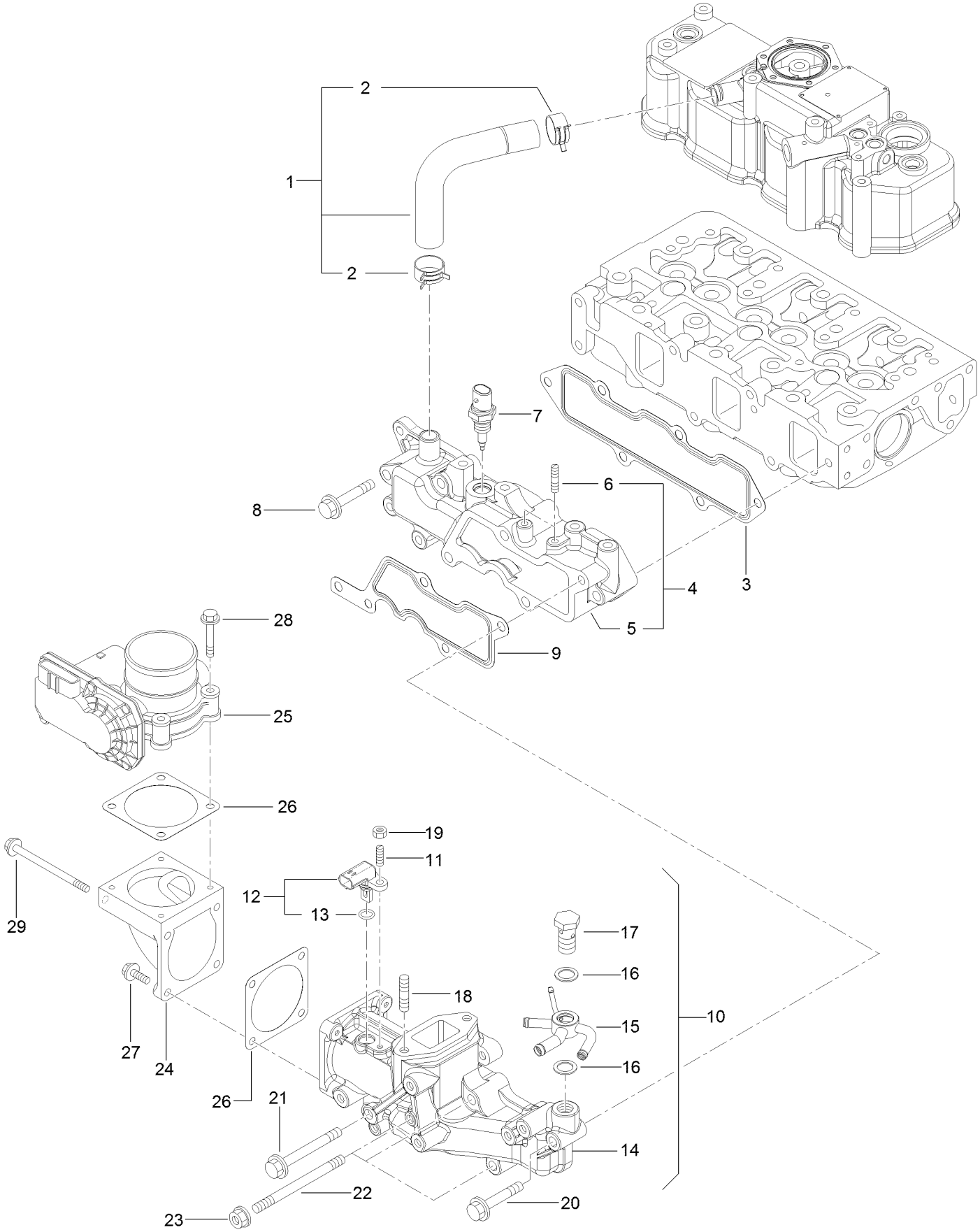

# Suction Manifold Assembly (continued)

| Ref. | Part Number | Qty. | Description |
|---|---|---|---|
| 1 | 127-4704 | 1 | Pipe |
| 2 | 125-7040 | 2 | Clip-Hose |
| 3 | 127-3857 | 1 | Gasket-Manifold, Intake |
| 4 | 127-4722 | 1 | Intake Manifold ASM |
| 5 | 127-4721 | 2 | Manifold-Intake |
| 6 | 127-3180 | 2 | Stud |
| 7 | 127-3031 | 1 | Sensor-Temp, Air |
| 8 | 125-7220 | 1 | Bolt |
| 9 | 127-3034 | 1 | Gasket-Collector |
| 10 | 131-2716 | 1 | Intake Collector ASM |
| 11 | 127-4701 | 2 | Stud |
| 12 | 127-3030 | 2 | Sensor-Temp, Air |
| 13 | 127-3033 | 3 | O Ring-Sensor, Temp |
| 14 | 127-4724 | 2 | Collector-Intake |
| 15 | 131-2729 | 2 | Joint-Hose, 4 Way |
| 16 | 127-3166 | 2 | Washer-Seal |
| 17 | 131-2738 | 2 | Bolt-Joint, 8 |
| 18 | 127-4774 | 2 | Stud |
| 19 | 127-4775 | 2 | Nut |
| 20 | 125-7220 | 1 | Bolt |
| 21 | 127-3178 | 1 | Bolt |
| 22 | 127-3182 | 1 | Stud |
| 23 | 125-7229 | 1 | Nut |
| 24 | 127-3035 | 1 | Bend-Inlet |
| 25 | 127-3036 | 1 | Body-Throttle |
| 26 | 127-3037 | 1 | Gasket-Throttle |
| 27 | 125-7209 | 1 | Bolt |
| 28 | 125-7211 | 1 | Bolt |
| 29 | 127-3177 | 1 | Bolt |

# Exhaust Manifold Assembly

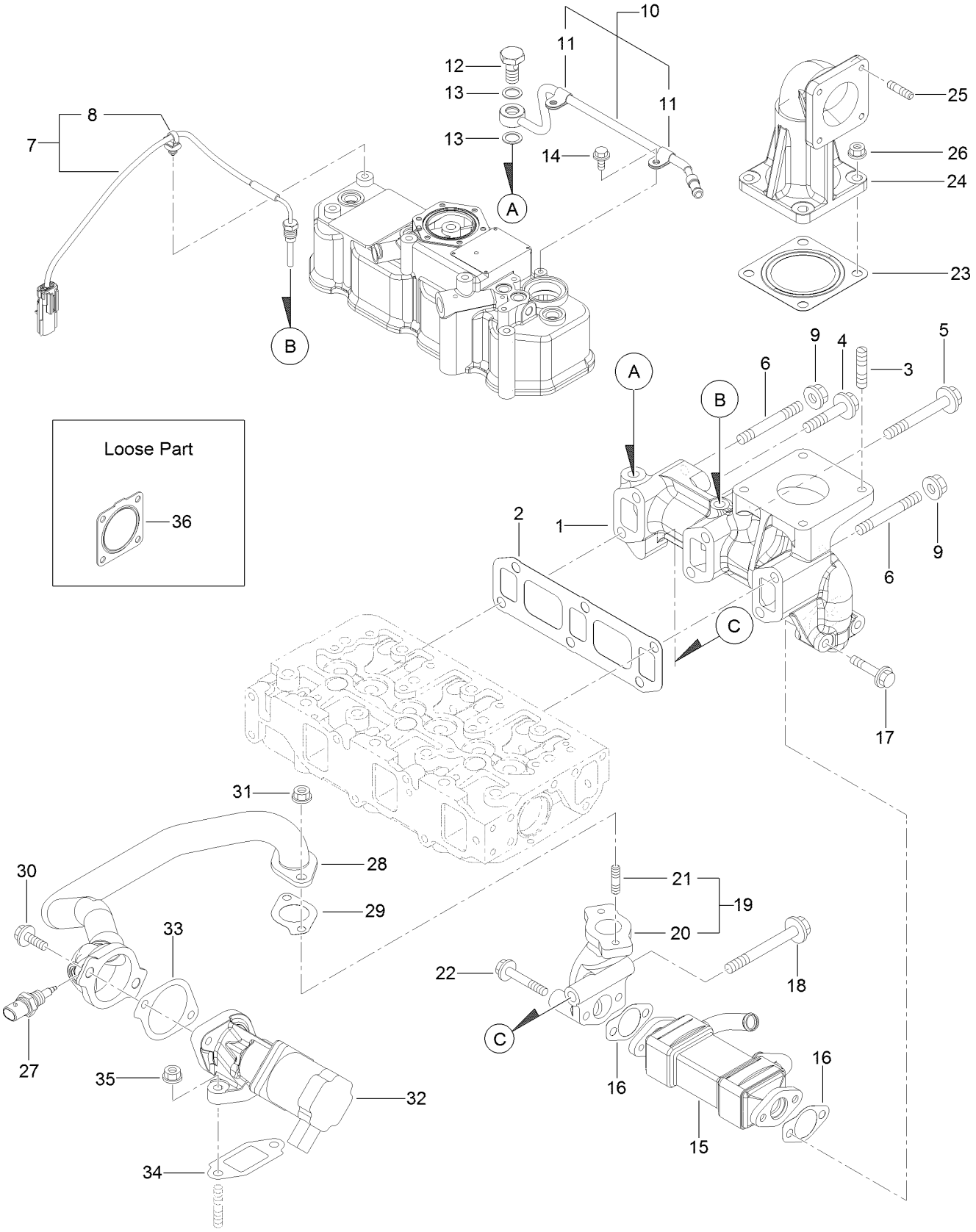

# Exhaust Manifold Assembly (continued)

| Ref. | Part Number | Qty. | Description |
|---|---|---|---|
| 1 | 127-4726 | 1 | Manifold-Exhaust |
| 2 | 127-3775 | 1 | Gasket-Manifold, Exhaust |
| 3 | 127-2984 | 4 | Stud |
| 4 | 127-3094 | 1 | Bolt |
| 5 | 127-3044 | 3 | Bolt-M10 |
| 6 | 127-4756 | 2 | Stud |
| 7 | 127-4729 | 1 | Sensor-Temp, Exhaust |
| 8 | 127-3087 | 1 | Band-Clip |
| 9 | 125-7230 | 2 | Nut |
| 10 | 127-3038 | 1 | Exhaust Pipe ASM |
| 11 | 127-3173 | 2 | Clamp |
| 12 | 127-3039 | 1 | Bolt-Joint, Pipe |
| 13 | 127-3174 | 2 | Gasket |
| 14 | 125-7206 | 2 | Bolt |
| 15 | 127-3042 | 1 | Cooler-E G R |
| 16 | 127-3043 | 2 | Gasket-Cooler, E G R |
| 17 | 127-2976 | 2 | Bolt |
| 18 | 127-3022 | 1 | Bolt-Flange |
| 19 | 127-3048 | 1 | E G R Pipe ASM |
| 20 | 127-3049 | 1 | Pipe-Out, E G R |
| 21 | 125-7043 | 2 | Stud |
| 22 | 125-7220 | 2 | Bolt |
| 23 | 127-2987 | 1 | Gasket-Silencer |
| 24 | 131-2717 | 1 | Pipe-Exhaust |
| 25 | 125-6906 | 4 | Stud |
| 26 | 125-7230 | 4 | Nut |
| 27 | 127-3047 | 1 | Sensor-Gas Temp, E G R |
| 28 | 127-3780 | 1 | E G R Pipe ASM |
| 29 | 127-3016 | 1 | Gasket |
| 30 | 125-7215 | 2 | Bolt |
| 31 | 125-7229 | 2 | Nut |
| 32 | 127-3781 | 1 | Valve-E G R |
| 33 | 127-3050 | 1 | Gasket-Intake Valve, E G R |
| 34 | 127-3051 | 1 | Gasket-Out Valve, E G R |
| 35 | 125-7229 | 2 | Nut |
| 36 | 127-3019 | 1 | Gasket |

# Diesel Particulate Filter Assembly

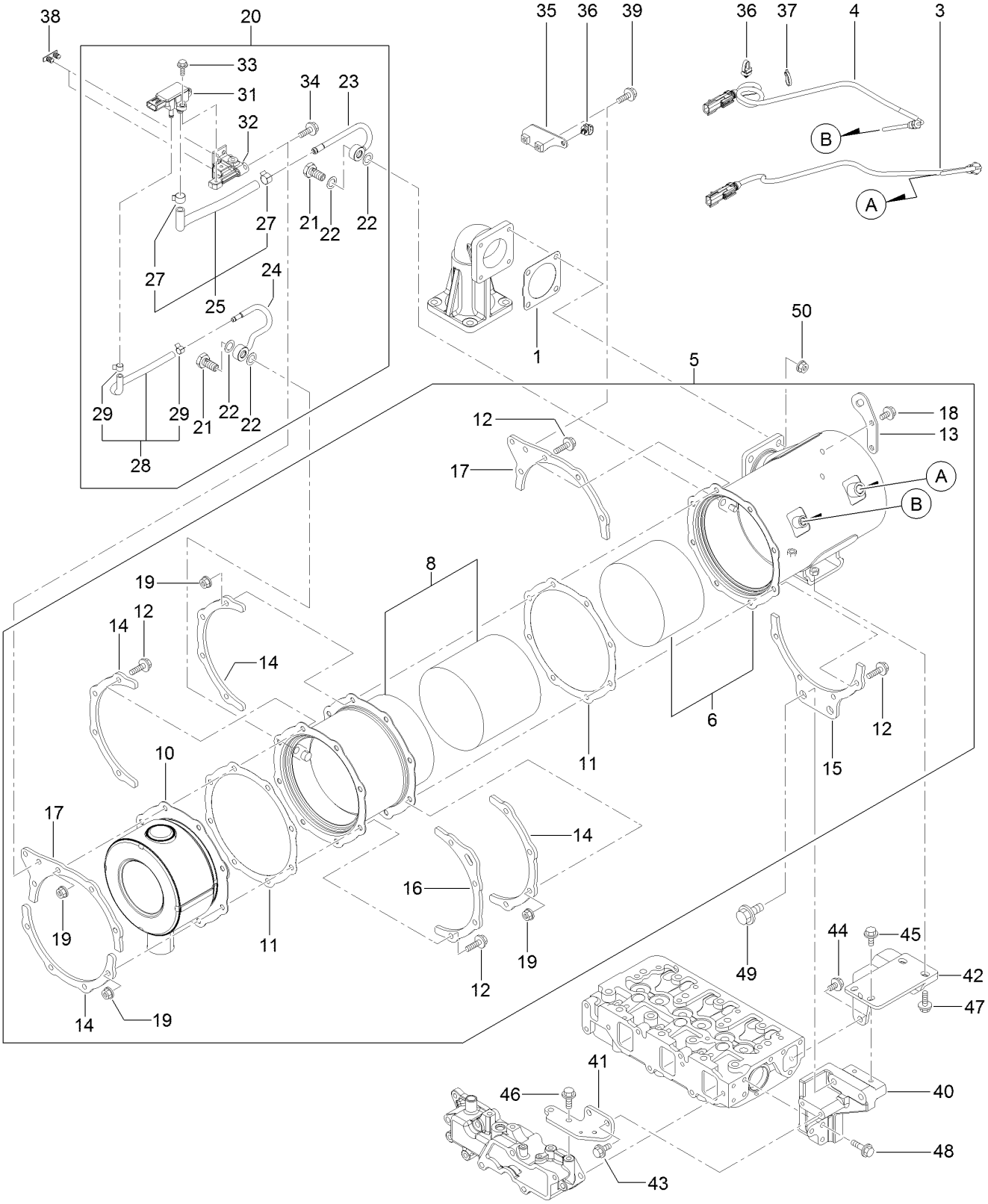

# Diesel Particulate Filter Assembly (continued)

| Ref. | Part Number | Qty. | Description |
|---|---|---|---|
| 1 | 127-3019 | 1 | Gasket |
| 3 | 131-2718 | 1 | Sensor-Temp, Exhaust |
| 4 | 131-2719 | 1 | Sensor-Temp, Exhaust |
| 5 | 131-2730 | 1 | D P F ASM |
| 6 | 131-2720 | 1 | Case-Doc |
| 8 | 127-4734 | 1 | Case-Filter, Soot |
| 10 | 127-3786 | 1 | Silencer-D P F |
| 11 | 127-3859 | 2 | Gasket-D P F |
| 12 | 127-3055 | 16 | Bolt |
| 13 | 127-3788 | 1 | Lifter-D P F |
| 14 | 127-3789 | 4 | Stiffener-D P F, A |
| 15 | 131-2721 | 1 | Stiffener-D P F, B |
| 16 | 127-3792 | 1 | Stiffener-D P F, C |
| 17 | 127-4736 | 2 | Stiffener-D P F, C |
| 18 | 125-7213 | 2 | Bolt |
| 19 | 125-7229 | 16 | Nut |
| 20 | 131-2722 | 1 | Pressure Sensor Unit |
| 21 | 127-3039 | 2 | Bolt-Joint, Pipe |
| 22 | 127-3056 | 4 | Gasket-Sensor |
| 23 | 127-4744 | 1 | Sensor Pipe ASM |
| 24 | 127-4745 | 1 | Sensor Pipe ASM |
| 25 | 127-3114 | 1 | Exhaust Hose ASM |
| 27 | 127-3057 | 2 | Clip-Hose |
| 28 | 131-2726 | 1 | Exhaust Press Hose ASM |
| 29 | 127-3058 | 2 | Clip-Hose |
| 31 | 127-3060 | 1 | Sensor-Pressure |
| 32 | 127-4750 | 1 | Bracket-Sensor |
| 33 | 125-7208 | 2 | Bolt |
| 34 | 125-7595 | 2 | Bolt |
| 35 | 131-2727 | 1 | Bracket-Harness |
| 36 | 127-3087 | 2 | Band-Clip |
| 37 | 127-3124 | 1 | Band |
| 38 | 127-3088 | 2 | Clip-Connnector |
| 39 | 125-7595 | 2 | Bolt |
| 40 | 131-2723 | 1 | Stay-D P F, A |
| 41 | 131-2724 | 1 | Support-Stay, D P F |
| 42 | 131-2725 | 1 | Stay-D P F, B |
| 43 | 125-7214 | 2 | Bolt |
| 44 | 125-7214 | 2 | Bolt |
| 45 | 125-7214 | 2 | Bolt |
| 46 | 125-7595 | 2 | Bolt |
| 47 | 125-7215 | 2 | Bolt |
| 48 | 125-7216 | 3 | Bolt |
| 49 | 131-2741 | 2 | Bolt-Plated, M12X 20 |
| 50 | 125-7229 | 4 | Nut |

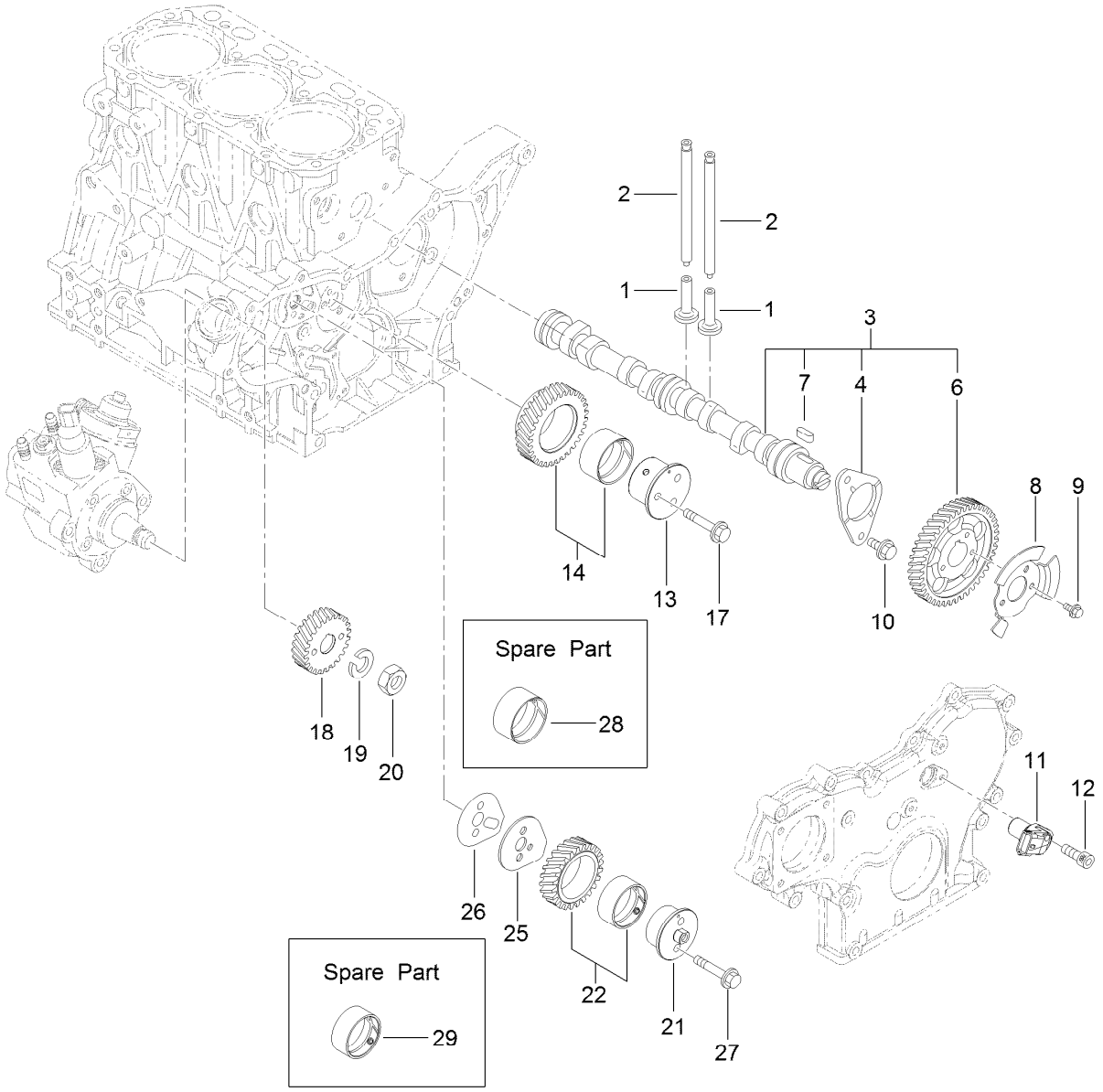


# Camshaft and Driving Gear Assembly

| Ref. | Part Number | Qty. | Description |
|---|---|---|---|
| 1 | 125-7016 | 6 | Tappet |
| 2 | 125-7017 | 6 | Rod-Push |
| 3 | 127-3797 | 1 | Camshaft ASM |
| 4 | 125-7008 | 1 | Metal-Thrust |
| 6 | 127-3052 | 1 | Gear-Camshaft |
| 7 | 125-7185 | 1 | Key |
| 8 | 127-3053 | 1 | Pulser-Camshaft |
| 9 | 125-7205 | 3 | Bolt |
| 10 | 125-7213 | 2 | Bolt |
| 11 | 127-3054 | 1 | Sensor-Rev, Gear |
| 12 | 127-3184 | 1 | Bolt |
| 13 | 127-3063 | 1 | Shaft-Idle, Gear A |

| Ref. | Part Number | Qty. | Description |
|---|---|---|---|
| 14 | 127-3066 | 1 | Idle Gear A ASM |
| 17 | 125-7219 | 3 | Bolt |
| 18 | 127-3070 | 1 | Gear-Pump, Supply |
| 19 | 127-3167 | 1 | Washer-Spring |
| 20 | 127-3185 | 1 | Nut-Lock |
| 21 | 127-3064 | 1 | Shaft-Idle, Gear B |
| 22 | 127-3067 | 1 | Idle Gear B ASM |
| 25 | 127-3068 | 1 | Plate-Idle, Shaft |
| 26 | 127-3069 | 1 | Gasket-Idle, Shaft B |
| 27 | 125-7218 | 2 | Bolt |
| 28 | 125-6927 | 1 | Bushing |
| 29 | 127-3065 | 1 | Bushing |

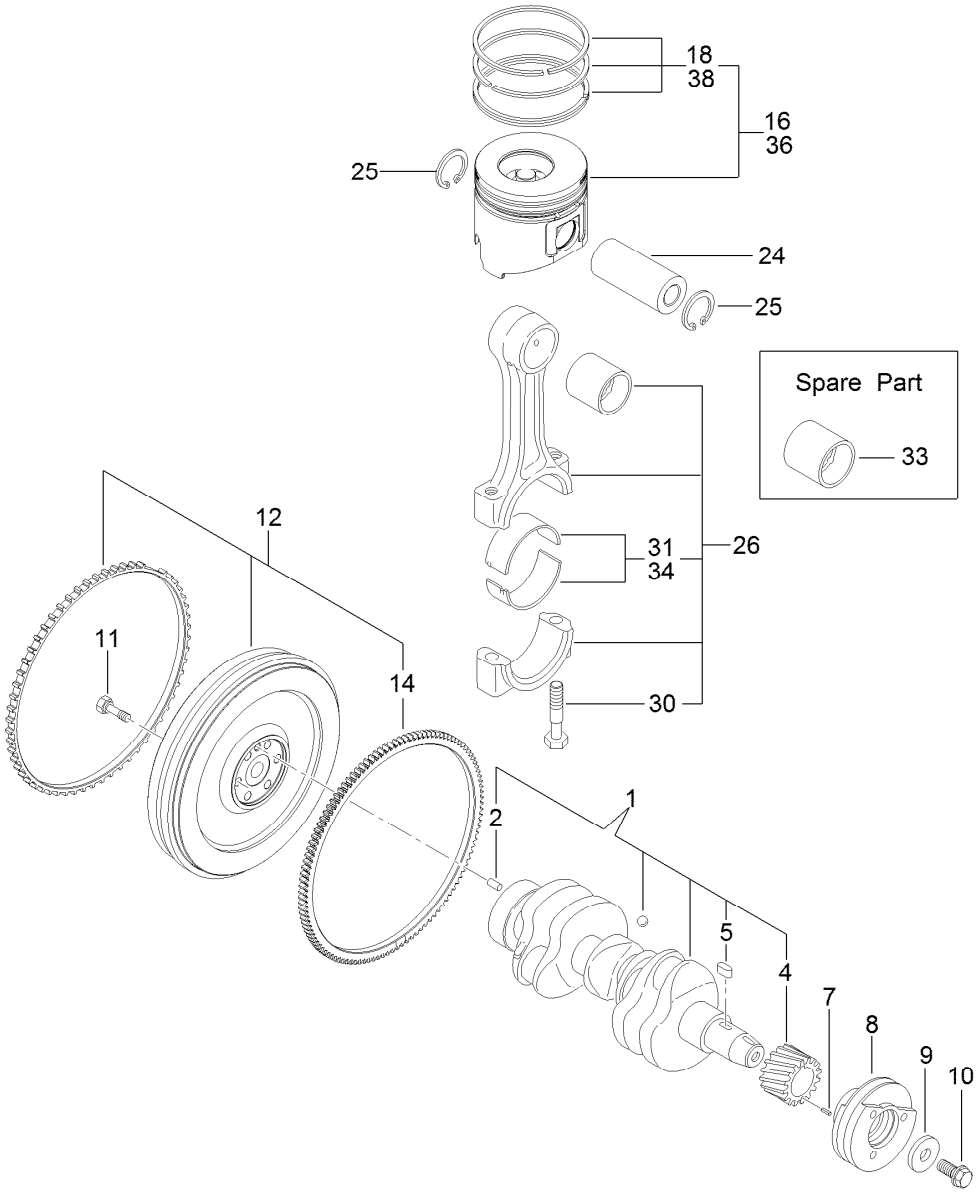


# Crankshaft and Piston Assembly

| Ref. | Part Number | Qty. | Description |
|---|---|---|---|
| 1 | 127-3800 | 1 | Crankshaft ASM |
| 2 | 125-6995 | 1 | Pin |
| 4 | 125-6937 | 1 | Gear |
| 5 | 125-7185 | 1 | Key |
| 7 | 125-7182 | 1 | Pin-Spring |
| 8 | 127-3801 | 1 | Pulley-V |
| 9 | 125-7109 | 1 | Washer |
| 10 | 125-6956 | 1 | Bolt |
| 11 | 125-6951 | 6 | Bolt |
| 12 | 127-4761 | 1 | Flywheel ASM |
| 14 | 127-4703 | 1 | Gear |

| Ref. | Part Number | Qty. | Description |
|---|---|---|---|
| 16 | 127-4766 | 3 | Piston ASM |
| 18 | 127-4751 | 3 | Piston Ring ASM |
| 24 | 125-7030 | 3 | Pin |
| 25 | 125-7180 | 6 | Ring |
| 26 | 125-7242 | 3 | Connecting Rod ASM |
| 30 | 125-6955 | 6 | Bolt |
| 31 | 125-7018 | 3 | Pin-Crank |
| 33 | 125-6997 | 3 | Pin-Piston |
| 34 | 125-7019 | 3 | Pin-Crank (.25) |
| 36 | 127-4767 | 3 | Piston ASM (0.25 O S) |
| 38 | 127-4752 | 3 | Ring Set (0.25 O S) |

# Cooling Water System Assembly

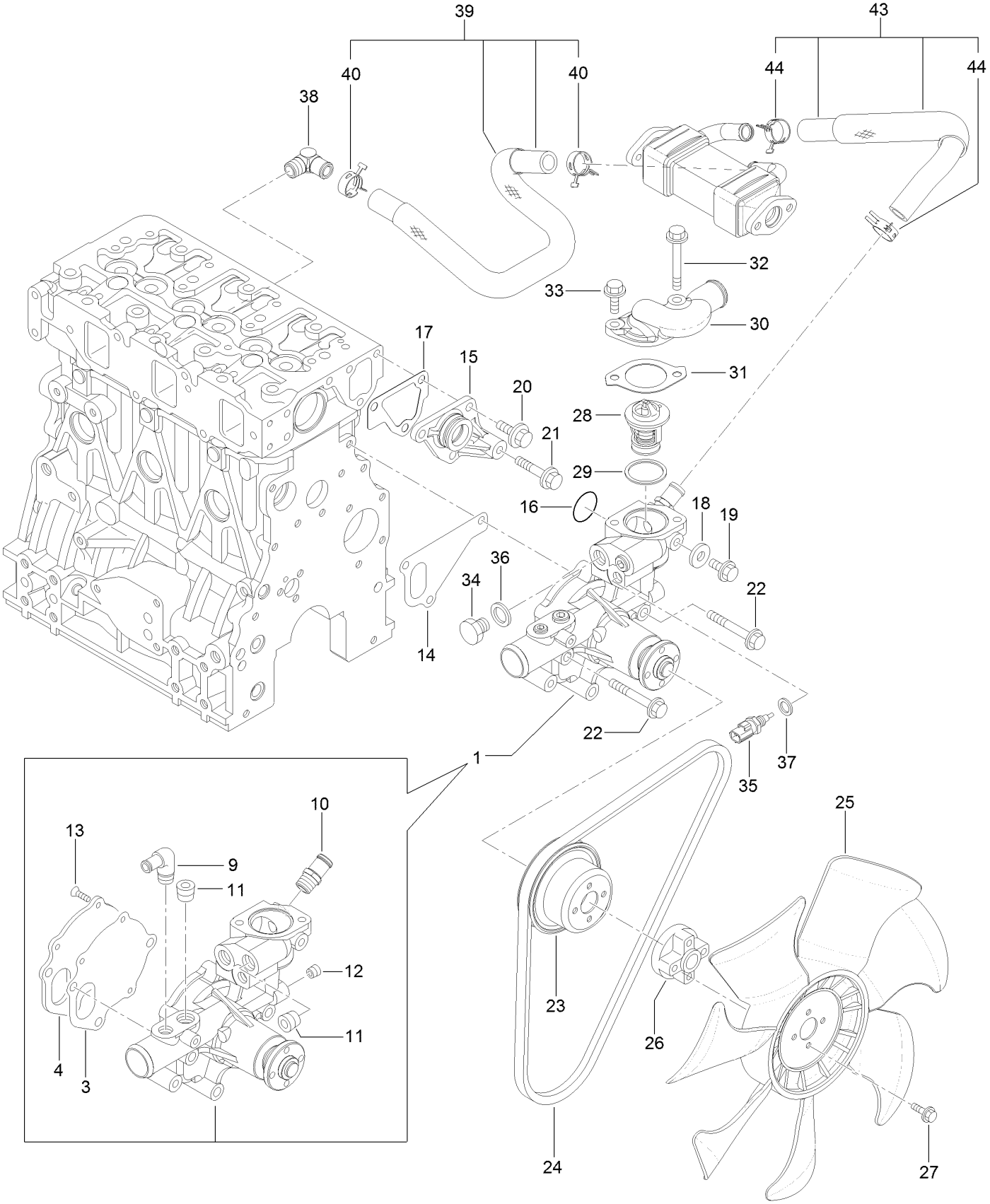

# Cooling Water System Assembly (continued)

| Ref. | Part Number | Qty. | Description |
|---|---|---|---|
| 1 | 131-2714 | 1 | Water Pump ASM |
| 3 | 125-6998 | 1 | Gasket |
| 4 | 125-6999 | 1 | Plate |
| 9 | 125-7001 | 1 | Elbow |
| 10 | 127-3017 | 1 | Joint |
| 11 | 125-7123 | 2 | Plug |
| 12 | 125-7195 | 1 | Plug |
| 13 | 125-7234 | 3 | Screw |
| 14 | 125-7047 | 1 | Gasket |
| 15 | 125-6986 | 1 | Joint |
| 16 | 125-7048 | 1 | O-Ring |
| 17 | 125-6978 | 1 | Gasket |
| 18 | 125-7192 | 1 | Gasket |
| 19 | 125-7212 | 1 | Bolt |
| 20 | 125-7214 | 3 | Bolt |
| 21 | 125-7219 | 1 | Bolt |
| 22 | 125-7222 | 3 | Bolt |
| 23 | 127-4712 | 1 | V-Pulley |
| 24 | 127-4771 | 1 | V-Belt |

| Ref. | Part Number | Qty. | Description |
|---|---|---|---|
| 25 | 127-4702 | 1 | Fan |
| 26 | 131-2705 | 1 | Spacer |
| 27 | 131-2739 | 4 | Bolt |
| 28 | 125-7029 | 1 | Thermostat |
| 29 | 125-7026 | 1 | Gasket |
| 30 | 131-2728 | 1 | Cover-Thermostat |
| 31 | 125-7110 | 1 | Gasket |
| 32 | 125-7594 | 1 | Bolt |
| 33 | 125-7220 | 1 | Bolt |
| 34 | 125-6953 | 1 | Plug |
| 35 | 125-7124 | 1 | Sensor-Thermostat, CW |
| 36 | 125-6979 | 1 | Gasket |
| 37 | 125-7176 | 1 | Washer-Seal |
| 38 | 127-4705 | 1 | Elbow |
| 39 | 127-4757 | 1 | E G R-C Pipe ASM |
| 40 | 127-3020 | 2 | Clip-Hose |
| 43 | 127-3811 | 1 | CW Pipe ASM |
| 44 | 127-3020 | 2 | Clip-Hose |

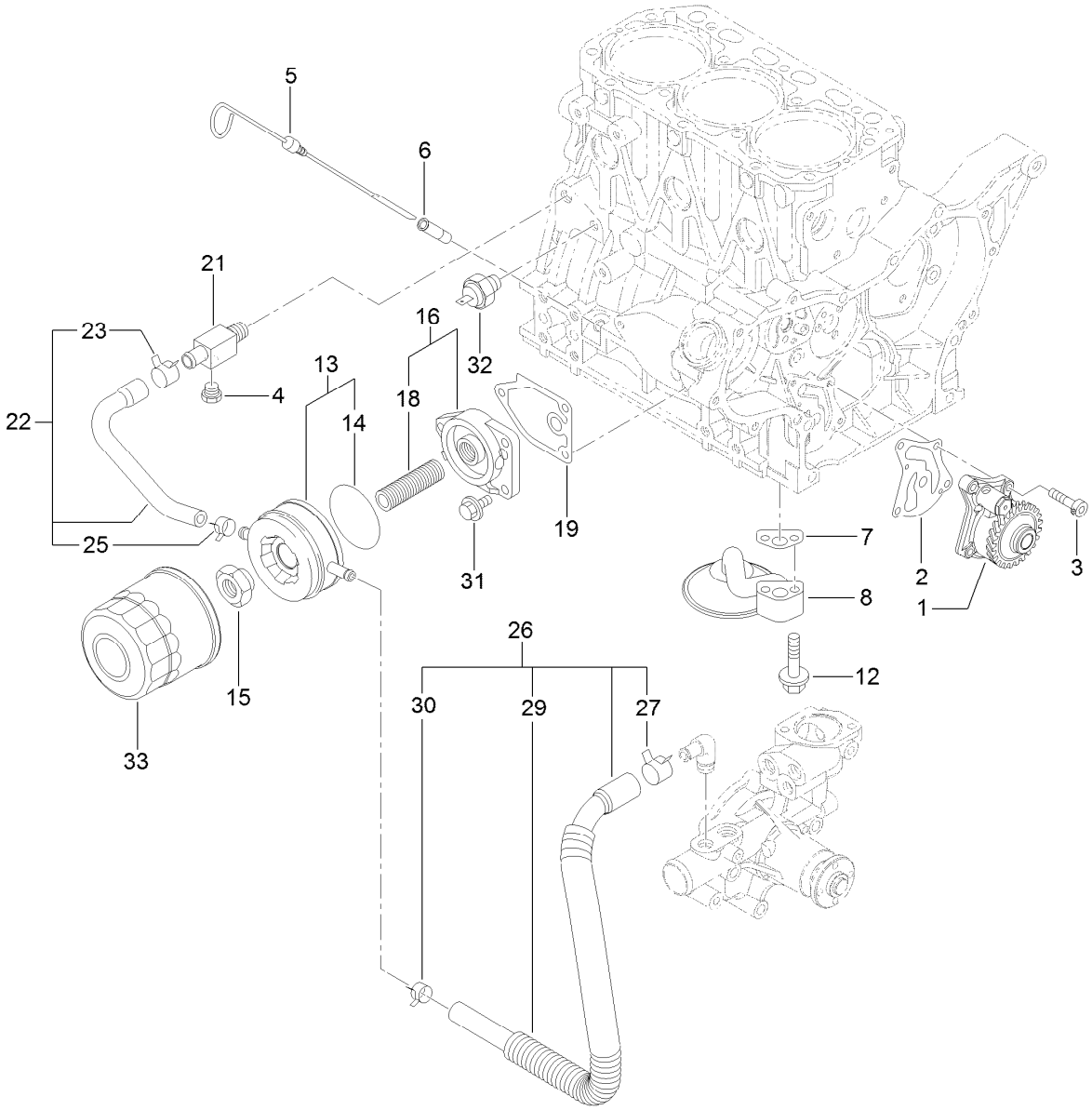


# Lubrication and Oil System Assembly

| Ref. | Part Number | Qty. | Description |
|---|---|---|---|
| 1 | 127-4753 | 1 | Oil Pump ASM |
| 2 | 127-3004 | 1 | Gasket |
| 3 | 125-7232 | 4 | Bolt |
| 4 | 125-7171 | 1 | Plug-Drain |
| 5 | 125-6987 | 1 | Dipstick |
| 6 | 125-6954 | 1 | Guide-Dipstick |
| 7 | 125-7022 | 1 | Gasket |
| 8 | 125-7023 | 1 | Pipe ASM |
| 12 | 125-7217 | 2 | Bolt |
| 13 | 125-7074 | 1 | Cooler ASM |
| 14 | 125-7075 | 1 | O-Ring |
| 15 | 125-7041 | 1 | Nut-Cooler, Oil |
| 16 | 125-6989 | 1 | Bracket ASM |

| Ref. | Part Number | Qty. | Description |
|---|---|---|---|
| 18 | 125-7042 | 1 | Stud |
| 19 | 125-7024 | 1 | Gasket |
| 21 | 125-6990 | 1 | Joint |
| 22 | 125-7078 | 1 | Pipe ASM |
| 23 | 125-7162 | 1 | Clip |
| 25 | 125-7191 | 1 | Clamp-Hose |
| 26 | 127-3804 | 1 | Pipe ASM |
| 27 | 125-7162 | 1 | Clip |
| 29 | 127-3805 | 1 | Tube |
| 30 | 125-7191 | 1 | Clamp-Hose |
| 31 | 125-7595 | 3 | Bolt |
| 32 | 125-6918 | 1 | Switch-Oil |
| 33 | 125-7025 | 1 | Filter-Engine |

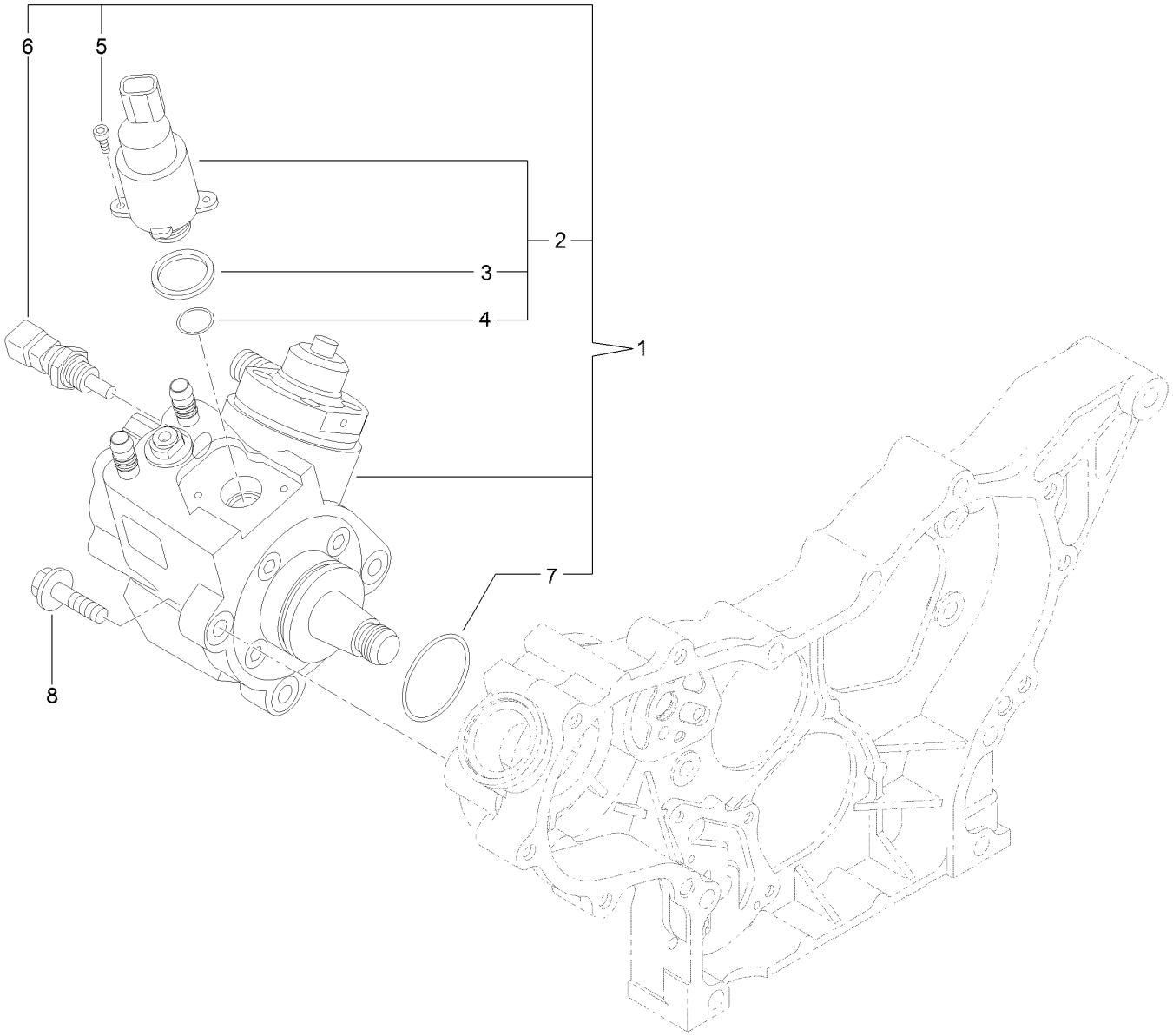


# Fuel System Assembly

| Ref. | Part Number | Qty. | Description |
|---|---|---|---|
| 1 | 127-3073 | 1 | Fuel Pump ASM |
| 2 | 131-2103 | 1 | Valve ASM |
| 3 | 131-2105 | 1 | Ring-Sealing |
| 4 | 131-2106 | 1 | O-Ring |
| 5 | 131-2107 | 2 | Bolt |
| 6 | 131-2108 | 1 | Sensor-Temperature |
| 7 | 127-3074 | 1 | O Ring-Pump, Fuel |
| 8 | 125-7216 | 3 | Bolt |

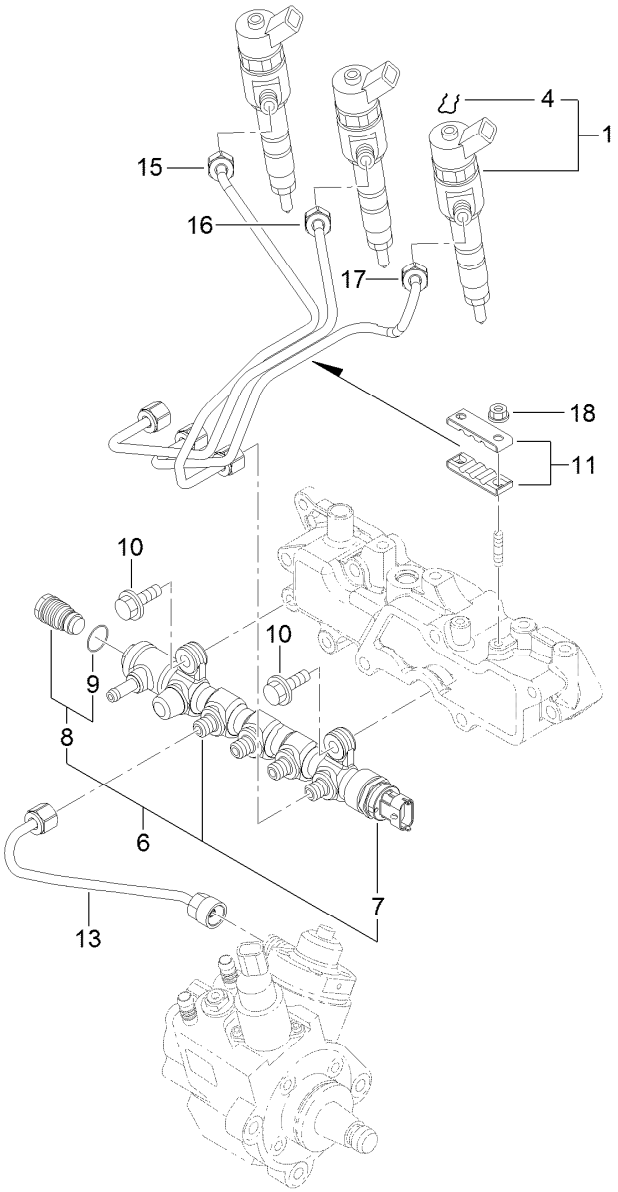


# Fuel Injection Valve Assembly

| Ref. | Part Number | Qty. | Description |
|---|---|---|---|
| 1 | 127-4754 | 3 | Injector ASM |
| 4 | 131-2708 | 3 | Ring, Retaining |
| 6 | 127-3812 | 1 | Rail ASM |
| 7 | 131-2709 | 1 | Sensor-Pressure, Rail |
| 8 | 131-2710 | 1 | Valve ASM |
| 9 | 131-2711 | 1 | O-Ring |
| 10 | 125-7215 | 2 | Bolt |
| 11 | 127-3813 | 2 | Retainer |
| 13 | 127-3082 | 1 | Rail In Pipe ASM |
| 15 | 127-3814 | 1 | Injection Pipe ASM |
| 16 | 127-3083 | 1 | Injection Pipe ASM |
| 17 | 127-3084 | 1 | Injection Pipe ASM |
| 18 | 125-7231 | 2 | Nut |

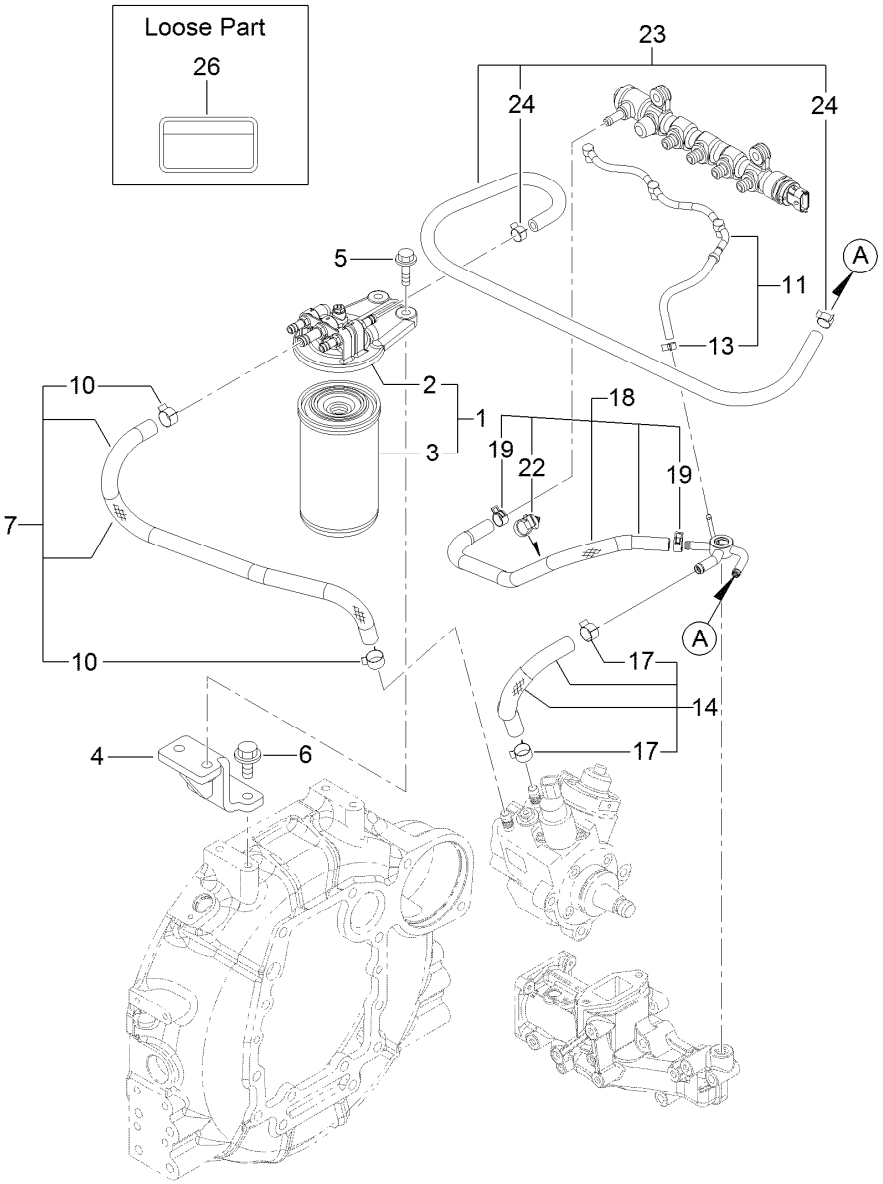


# Fuel Pipe Assembly

| Ref. | Part Number | Qty. | Description |
|---|---|---|---|
| 1 | 127-3075 | 1 | Fuel/Oil Filter ASM |
| 2 | 127-3076 | 1 | Fuel/Oil Filter Bracket ASM |
| 3 | 125-8752 | 1 | Filter-Fuel/Oil |
| 4 | 131-2731 | 1 | Bracket-Filter, Fuel |
| 5 | 125-7216 | 2 | Bolt |
| 6 | 131-2740 | 1 | Bolt-Plated, M10X 22 |
| 7 | 131-2732 | 1 | Fuel Pipe ASM |
| 10 | 125-7191 | 2 | Clamp-Hose |
| 11 | 127-3816 | 1 | Fuel/Oil Return Pipe ASM |

| Ref. | Part Number | Qty. | Description |
|---|---|---|---|
| 13 | 127-3172 | 1 | Clamp-Hose |
| 14 | 127-3078 | 1 | Fuel Pipe ASM |
| 17 | 125-7191 | 2 | Clamp-Hose |
| 18 | 127-3817 | 1 | Fuel Pipe ASM |
| 19 | 127-2950 | 2 | Clip-Hose |
| 22 | 127-3087 | 1 | Band-Clip |
| 23 | 131-2733 | 1 | Fuel Pipe ASM |
| 24 | 127-2950 | 2 | Clip-Hose |
| 26 | 125-6900 | 1 | Label-Caution, Fuel Oil |

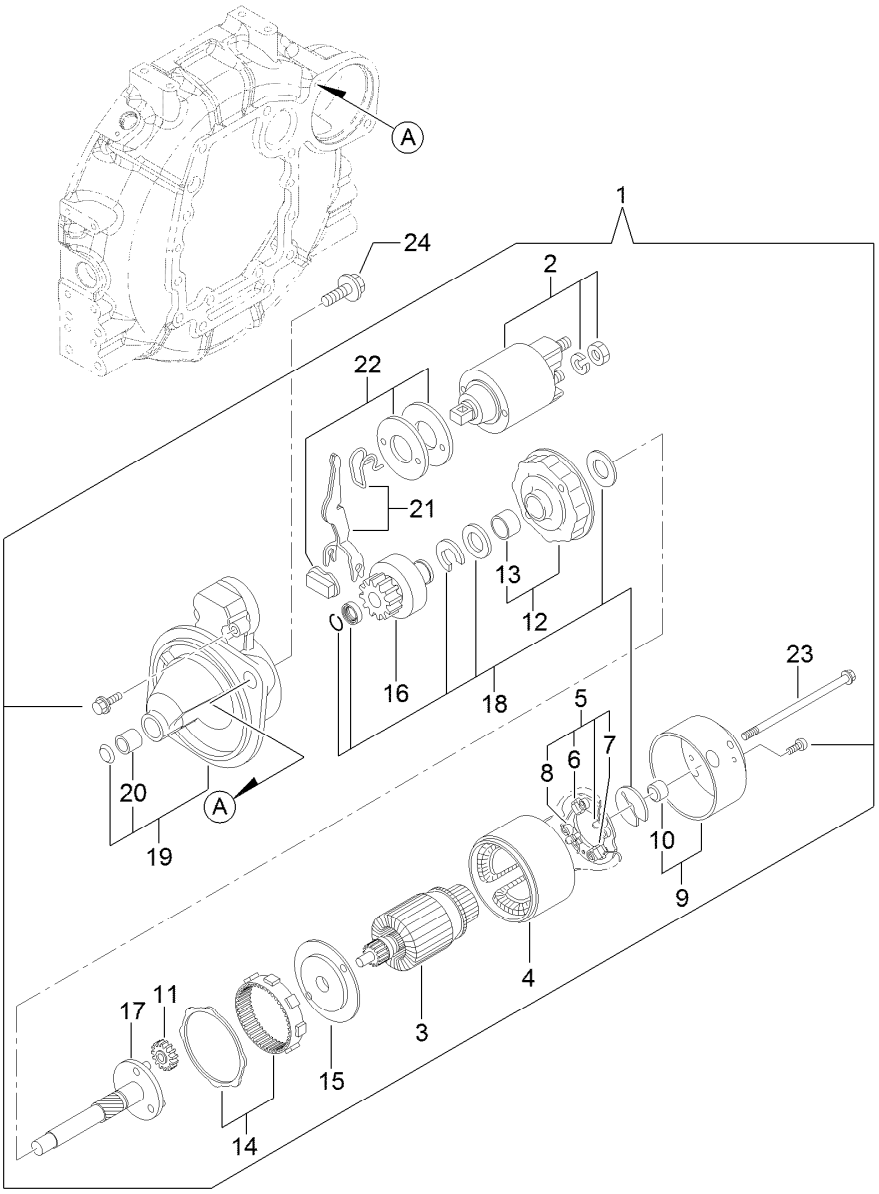


# Starting Motor Assembly

| Ref. | Part Number | Qty. | Description |
|---|---|---|---|
| 1 | 127-3818 | 1 | Starter ASM |
| 2 | 127-3819 | 1 | Switch ASM |
| 3 | 127-3820 | 1 | Armature ASM |
| 4 | 127-3821 | 1 | Yoke ASM |
| 5 | 127-3822 | 1 | Brush Holder ASM |
| 6 | 127-3823 | 2 | Brush |
| 7 | 127-3824 | 1 | Brush Set |
| 8 | 127-3825 | 4 | Spring |
| 9 | 127-3826 | 1 | Cover ASM |
| 10 | 127-3827 | 1 | Metal |
| 11 | 127-3828 | 3 | Gear |
| 12 | 127-3829 | 1 | Bracket |
| 13 | 127-3830 | 1 | Bracket |
| 14 | 127-3831 | 1 | Gear |
| 15 | 127-3832 | 1 | Bracket |
| 16 | 127-3833 | 1 | Pinion ASM |
| 17 | 127-3834 | 1 | Shaft |
| 18 | 127-3835 | 1 | Washer Set |
| 19 | 127-3836 | 1 | Case ASM |
| 20 | 127-3837 | 1 | Metal-Starter |
| 21 | 127-3838 | 1 | Lever Set |
| 22 | 127-3839 | 1 | Dust Cover ASM |
| 23 | 127-3840 | 2 | Bolt-Through |
| 24 | 125-7225 | 2 | Bolt |

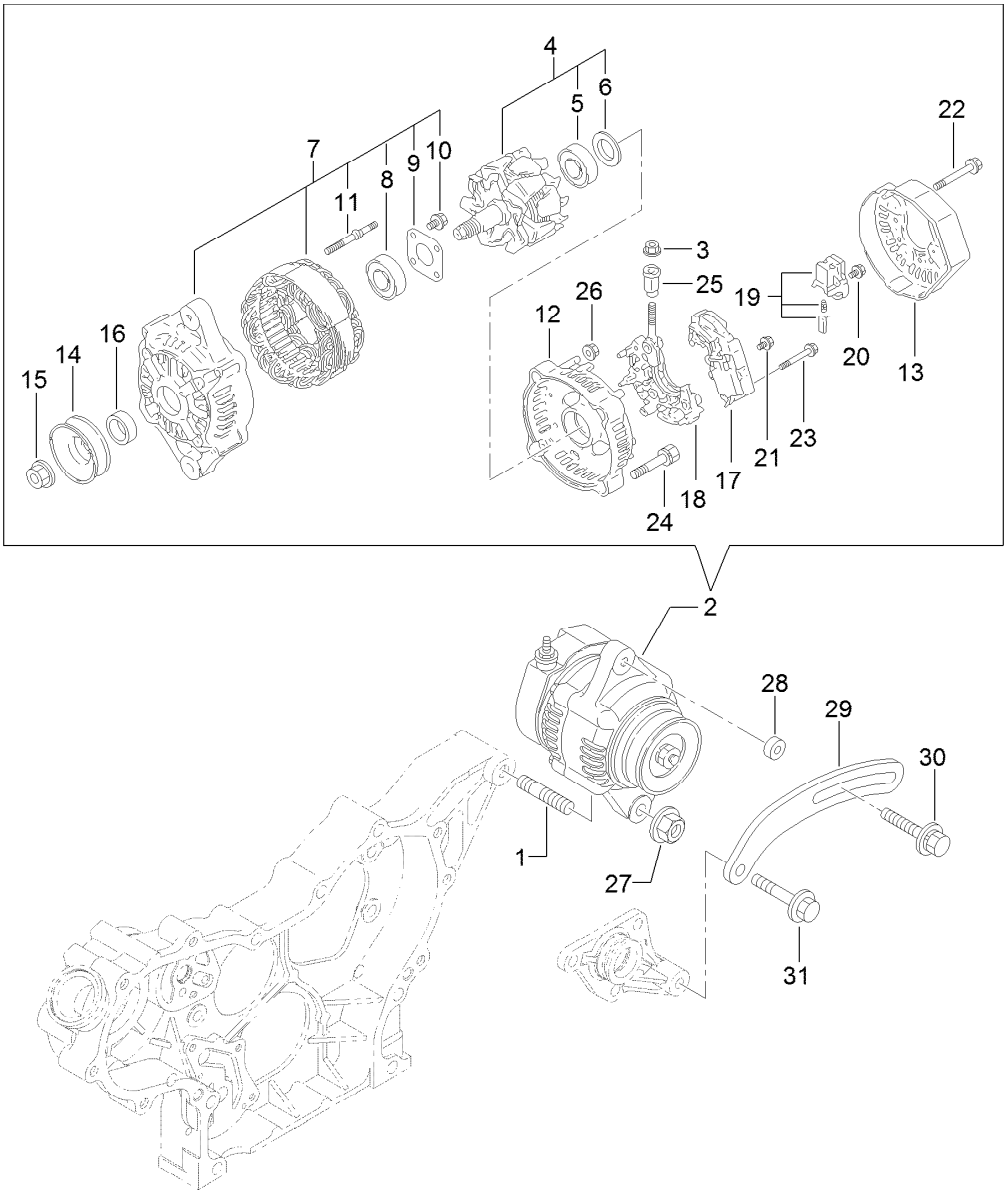


# Generator Assembly

| Ref. | Part Number | Qty. | Description |
|---|---|---|---|
| 1 | 127-3011 | 1 | Stud |
| 2 | 127-3841 | 1 | Generator |
| 3 | 127-3190 | 1 | Nut |
| 4 | 127-3843 | 1 | Rotor ASM |
| 5 | 127-2983 | 1 | Bearing-Ball |
| 6 | 127-2962 | 1 | Cover |
| 7 | 127-3844 | 1 | Frame ASM |
| 8 | 127-2958 | 1 | Bearing-Ball |
| 9 | 127-2959 | 1 | Plate-Retainer |
| 10 | 127-2960 | 4 | Screw |
| 11 | 127-2961 | 2 | Stud |
| 12 | 127-3845 | 1 | Frame |
| 13 | 127-3846 | 1 | Cover |
| 14 | 127-2954 | 1 | Pulley |
| 15 | 127-2955 | 1 | Nut |
| 16 | 127-2957 | 1 | Collar |

| Ref. | Part Number | Qty. | Description |
|---|---|---|---|
| 17 | 127-3847 | 1 | Regulator ASM |
| 18 | 127-3848 | 1 | Holder |
| 19 | 127-2993 | 1 | Holder |
| 20 | 127-2965 | 6 | Screw |
| 21 | 127-2966 | 1 | Screw |
| 22 | 127-2967 | 3 | Bolt |
| 23 | 127-2968 | 2 | Screw |
| 24 | 127-2969 | 2 | Bolt |
| 25 | 127-2970 | 1 | Bushing-Insulation |
| 26 | 127-2971 | 2 | Nut |
| 27 | 125-7230 | 1 | Nut |
| 28 | 125-6947 | 1 | Spacer |
| 29 | 127-2977 | 1 | Adjuster |
| 30 | 125-7134 | 1 | Bolt |
| 31 | 125-7219 | 1 | Bolt |

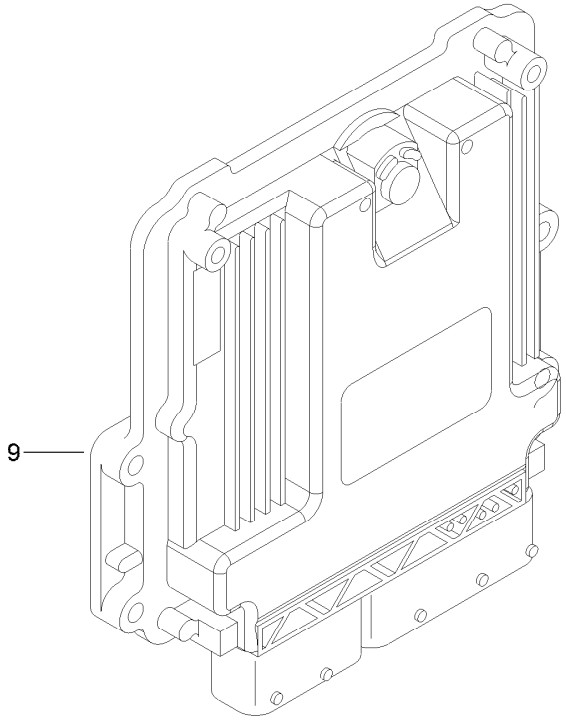


# Electronic Control Unit Assembly

| *Ref.* | *Part Number* | *Qty.* | *Description* |
|---|---|---|---|
| 9 | 127-3085 | 1 | E C U ASM |

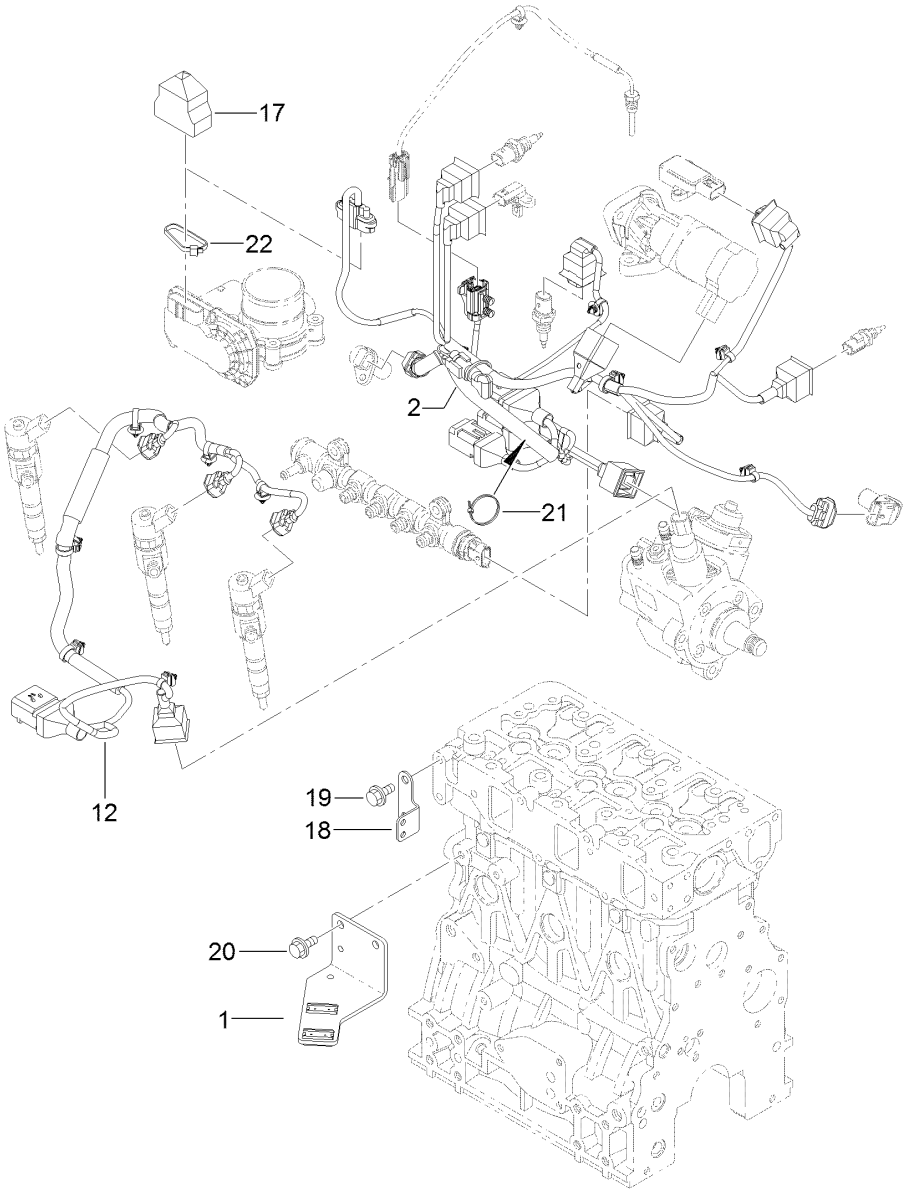


# Electric Parts Assembly

| *Ref.* | *Part Number* | *Qty.* | *Description* |
|---|---|---|---|
| 1 | 131-2735 | 1 | Bracket-Connector |
| 2 | 131-2736 | 1 | Harness-B, T4 |
| 12 | 131-2712 | 1 | Harness |
| 17 | 131-2713 | 1 | Boot-Cap |
| 18 | 127-3090 | 1 | Bracket-Harness |
| 19 | 125-7212 | 2 | Bolt |
| 20 | 125-7213 | 2 | Bolt |
| 21 | 127-3187 | 1 | Band |
| 22 | 127-3188 | 1 | Band |

# Gasket Set

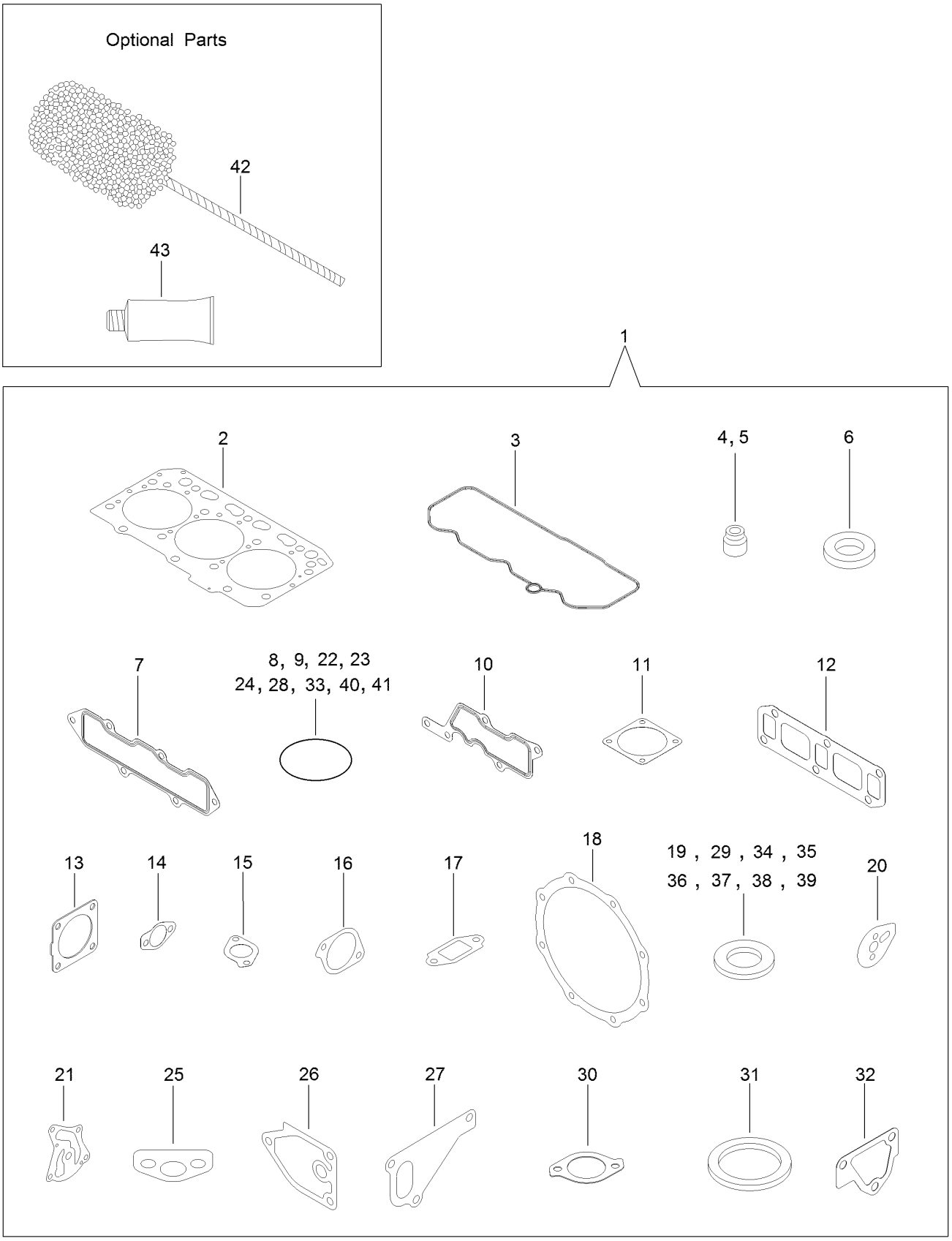
Optional Parts
42
43
1
2
3
4, 5
6
7
8, 9, 22, 23
24, 28, 33, 40, 41
10
11
12
13
14
15
16
17
18
19 , 29 , 34 , 35
36 , 37 , 38 , 39
20
21
25
26
27
30
31
32

# Gasket Set (continued)

| Ref. | Part Number | Qty. | Description |
|---|---|---|---|
| 1 | 131-2737 | 1 | Packing |
| 2 | 127-4716 | 1 | Head Gasket ASM |
| 3 | 127-3856 | 1 | Gasket-Head, Cylinder |
| 4 | 127-2986 | 3 | Seal-Stem, Valve |
| 5 | 127-3027 | 3 | Seal-Stem, Valve |
| 6 | 127-3021 | 3 | Gasket-Injector |
| 7 | 127-3857 | 1 | Gasket-Manifold, Intake |
| 8 | 127-3032 | 2 | O Ring-Sensor, Pressure |
| 9 | 127-3033 | 1 | O Ring-Sensor, Temp |
| 10 | 127-3034 | 1 | Gasket-Collector |
| 11 | 127-3037 | 2 | Gasket-Throttle |
| 12 | 127-3775 | 1 | Gasket-Manifold, Exhaust |
| 13 | 127-2987 | 1 | Gasket-Silencer |
| 14 | 127-3043 | 2 | Gasket-Cooler, E G R |
| 15 | 127-3016 | 1 | Gasket |
| 16 | 127-3050 | 1 | Gasket-Intake Valve, E G R |
| 17 | 127-3051 | 1 | Gasket-Out Valve, E G R |
| 18 | 127-3859 | 2 | Gasket-D P F |
| 19 | 127-3056 | 4 | Gasket-Sensor |
| 20 | 127-3069 | 1 | Gasket-Idle, Shaft B |
| 21 | 127-3004 | 1 | Gasket |
| 22 | 125-6909 | 2 | O-Ring |
| 23 | 127-2973 | 1 | O-Ring |
| 24 | 125-7075 | 1 | O-Ring |
| 25 | 125-7022 | 1 | Gasket |
| 26 | 125-7024 | 1 | Gasket |
| 27 | 125-7047 | 1 | Gasket |
| 28 | 125-7048 | 1 | O-Ring |
| 29 | 125-6979 | 1 | Gasket |
| 30 | 125-7110 | 1 | Gasket |
| 31 | 125-7026 | 1 | Gasket |
| 32 | 125-6978 | 1 | Gasket |
| 33 | 127-3074 | 1 | O Ring-Pump, Fuel |
| 34 | 125-7174 | 1 | Washer-Seal |
| 35 | 125-7176 | 1 | Washer-Seal |
| 36 | 127-3166 | 2 | Washer-Seal |
| 37 | 125-7177 | 1 | Washer-Seal |
| 38 | 125-7192 | 1 | Gasket |
| 39 | 127-3174 | 2 | Gasket |
| 40 | 93-0418 | 3 | O-Ring |
| 41 | 125-7197 | 2 | O-Ring |
| 42 | 127-3000 | 1 | Hone |
| 43 | 125-7248 | 1 | Gasket-Liquid |

# Attachments and Accessories

## For 31200 Groundsmaster 360 4-Wheel Drive Multi-Purpose Machine

| Product Name | Model/Part |
|---|---|
| Green Diesel Cap | 107-2172 |
| MVP Filter Kit | 30261 |
| 48 Inch V-Plow | 30750 |
| Speed Reduction Kit, 2015 and After Groundsmaster 360 Multi-Purpose Machine | 30287 |
| Beacon Kit | 120-0256 |
| Electrical Accessory Kit | 115-0019 |
| Registration Plate Kit | 120-6678 |
| Jack Stand Kit | 30579 |
| Hitch Kit | 130-8716 |
| Quick Attach Front Frame | 30509 |
| V-Plow Mounting Kit | 30378 |
| Diagnostic Display Box | 85-4750 |
| Weight Transfer Kit | 120-6683 |
| Auxiliary Power Unit | 120-6675 |
| Winter Attachment Joystick Kit | 31219 |
| Premium Transmission/Hydraulic Tractor Fluid (55 Gallon Drum) | 108-1183 |
| Premium Transmission/Hydraulic Tractor Fluid (5 Gallon Pail) | 108-1184 |
| Winter Enclosure | 31220 |
| 72in Side Discharge Deck | 30481 |
| Blade-Belt Kit, 72in Side Discharge Deck | 105-7272 |
| Premium Engine Oil 15w40 (55 Gallon Drum) | 121-6394 |
| Atomic Blade Kit (3 Blade Pack) | 119-8020 |
| Premium Engine Oil 15w40 (5 Gallon Pail) | 121-6395 |
| Blade-Rotary, Atomic (24.5in) | 110-0624-03 |
| Blade-Rotary, Medium Flow (24.5in) | 110-0621-03 |
| Leaf Mulching Kit | 108-5273 |
| Hardtop Sunshade | 30359 |
| 72in Side Discharge Mower (CE) | 30354 |
| 5in Air Cleaner Safety Element | 114-4057 |
| CE Kit, 72in Side Deck With French Guards | 30679 |
| High Lift Collection | 30866 |
| Carrier Frame Asm for High Lift Collection | 30869 |
| Hydraulic and Electrical Mounting Kit for High Lift Collection | 30801 |
| Parking Stand Kit for High Lift Collection | 30818 |
| Light Kit for High Lift Collection | 30816 |
| Controller Kit for High Lift Collection | 30897 |
| 72in Guardian and Rear Discharge CE Mower Cover Kit | 30685 |
| 72in Base Deck | 30353 |
| Blade-Belt Kit, 72in Guardian Only | 105-7271 |
| 72in Guardian Recycler Completion Kit | 30304 |
| 72in Guardian Fine Recycler Completion Kit | 30346 |
| Bahiagrass Baffle Kit | 105-7269 |
| Blade-Flat | 112-9586-03 |
| Hourmeter, Wireless Hourmeter System | 115-4754 |
| 72in Rear Discharge Completion Kit | 30549 |
| CE Guard Kit, Groundsmaster 360 Multi-Purpose Machine | 30689 |

# Attachments and Accessories (continued)

Road Homologation Light Kit, Non-Cab Unit (Europe) ..... 30512
Road Light Kit, Non Cab Unit (North America) ..... 30513
Slow Moving Vehicle Sign Kit ..... 115-0014
Locking Latch ..... 98-9315
Grammer Seat with Air Ride Suspension ..... 30511
Vinyl Backrest Extension Kit ..... 120-0583
100in Rear Discharge Deck ..... 31101
Adapter Kit, 100in Rear Discharge Mower for 2-Wheel Drive or 2013 and Before 4-Wheel Drive Groundsmaster 360 Traction Unit ..... 31102
Adapter Kit, 100in Rear Discharge Deck for 2014 and After Groundsmaster 360 4-Wheel Drive Traction Unit ..... 31103
Leaf Mulching Kit for 100in Rear Discharge Deck ..... 31105
100in CE Mower Cover Kit ..... 30687
Standard Blade Kit for 100in Rear Discharge Deck ..... 131-3364
Blade-Combination (19in) ..... 106-7166-03
Blade-combination (25.18in) ..... 125-9444-03

**Notes:**

**Notes:**

TORO®

Count on it.