Form No. 3410-117 Rev A

TORO®

Count on it.

Parts Catalog

Groundsmaster® 360

4-Wheel Drive Multi-Purpose Machine

Model No. 31223—Serial No. 400000000 and Up

Register at www.Toro.com.
Original Instructions (EN)

CE

3410-117 A

Ordering Replacement Parts

To order replacement parts, please supply the part number, the quantity, and the description of each part desired.

Understanding Reference Numbers

Each identified part in an illustration has a reference number. The reference number for a part also appears in the parts list, along with other information about the part.

This catalog uses two special reference number formats, one to indicate parts in a service assembly and another to indicate the quantity of a given part in an illustration.

Service Assembly Reference Numbers

Parts in service assemblies have reference numbers in the form a:b. The a represents the reference number of the entire service assembly and the b represents a sequential number unique to each part within the service assembly.

For example, a wheel assembly might be identified by reference number 6, the tire by 6:1, the valve by 6:2, and the wheel by 6:3. When you order the assembly identified by reference number 6, you receive all parts identified by reference numbers 6:1,6:2, and 6:3. However, you may also order any part individually. Reference numbers of this type appear in illustration and in parts lists.

Reference Numbers Indicating Quantity

In an illustration, if a reference number indicates more than one part, the reference number has the form nX y. The n represents the quantity of the part, the X is the multiplication symbol, and the y represents the reference number.

For example, in an illustration, the reference number 2X 37 means that two of the parts identified by reference number 37 are indicated.

Contents

Frame and Rear Axle Assembly . . . 5
Lift Shaft and Linkage Assembly . . . 6
Hydraulic Cylinder Assembly No. 110-9834 . . . 7
Platform and Roll-Over Protection System Assembly . . . 8
4 Wheel Drive Steering Assembly . . . 10
Front Cover Assembly . . . 11
Front Axle and Tie Rod Assembly . . . 12
Front Axle Assembly No. 125-2825 . . . 14
Hydraulic Cylinder Assembly No. 125-2835 . . . 15
Rear Steering Assembly . . . 16
Engine Component Assembly . . . 18
Transmission Component Assembly . . . 19
Charge Pump Housing Assembly Transmission Assembly No. 125-9290 . . . 20
Center Section Assembly Transmission Assembly No. 125-9290 . . . 22
Gear Case and Clutch Assembly Transmission Assembly No. 125-9290 . . . 24
Driveshaft Assembly No. 110-3575 . . . 26
Radiator Component Assembly . . . 27
Radiator and Cooler Assembly . . . 28
Muffler Assembly . . . 29
Battery and Fuel Delivery Assembly . . . 30
Air Cleaner Assembly . . . 31
Fan Spacer and Thermoswitch Assembly . . . 32
Steering Column Assembly . . . 33
Steering Column Assembly No. 117-3371 . . . 34
Steering Valve Assembly No. 130-7948 . . . 35
Fuel Tank and Control Panel Component Assembly . . . 36
Fuel Tank Assembly No. 120-0255 . . . 37
Seat Plate Assembly . . . 38
Module Control and Relay Assembly . . . 39
Seat Assembly . . . 40
Seat Assembly No. 107-2286 . . . 41
Seat Platform Assembly . . . 42
Brake Pedal Assembly . . . 43
Wheel and Brake Assembly . . . 44
Left Hand Brake Assembly No. 120-0235 . . . 45
Right Hand Brake Assembly No. 120-0233 . . . 46
4 Wheel Drive Hydraulic Motor and Fitting Assembly . . . 47
Hydraulic Motor Assembly No. 117-3284 (CCW) . . . 48
Hydraulic Motor Assembly No. 117-3285 (CW) . . . 49
Hood Assembly . . . 50
Storage Compartment Assembly . . . 51
Deck Lift Valve and Hydraulic Fitting Assembly . . . 52
Hydraulic Gear Pump Assembly No. 115-0375 . . . 54
Valve Assembly No. 131-1934 . . . 55
Hydraulic Tube and Hose Assembly . . . 56
Hydraulic Valve Assembly . . . 58
Steering Selector Valve Assembly No. 115-0280 . . . 59
Cross-Trax Traction Valve Assembly No. 117-2247 . . . 60
4 Wheel Drive Hydraulic Hose Assembly . . . 61
Traction Pedal Assembly . . . 62
Neutral System Assembly . . . 64
Electrical Assembly . . . 66
Crankcase Assembly . . . 67
Oil Pan Assembly . . . 68

© 2017—The Toro® Company

8111 Lyndale Avenue South
Bloomington, MN 55420

Contact us at www.Toro.com.
Printed in the USA.

All Rights Reserved

Contents (continued)

Cylinder Head Assembly . . . 69
Gear Case Assembly . . . 70
Cylinder Head Cover Assembly . . . 71
Dipstick and Guide Assembly . . . 72
Main Bearing Case Assembly . . . 73
Cam Shaft and Idle Gear Assembly . . . 74
Piston and Crankshaft Assembly . . . 75
Flywheel Assembly . . . 76
Fuel Camshaft and Governor Shaft Assembly . . . 77
Idle Apparatus Assembly . . . 78
Injection Pump Assembly . . . 79
Governor Assembly . . . 80
Speed Control Plate Assembly . . . 81
Nozzle Holder and Glow Plug Assembly . . . 82
Nozzle Holder Component Assembly . . . 83
Alternator and Pulley Assembly . . . 84
Alternator Components . . . 85
Starter Assembly . . . 86
Starter (Component Part) Assembly . . . 87
Water Flange Assembly . . . 88
Water Pump Assembly . . . 89
Valve and Rocker Arm Assembly . . . 90
Intake and Exhaust Manifold Assembly . . . 91
Muffler Gasket and Operator Manual . . . 92
Attachments and Accessories . . . 93

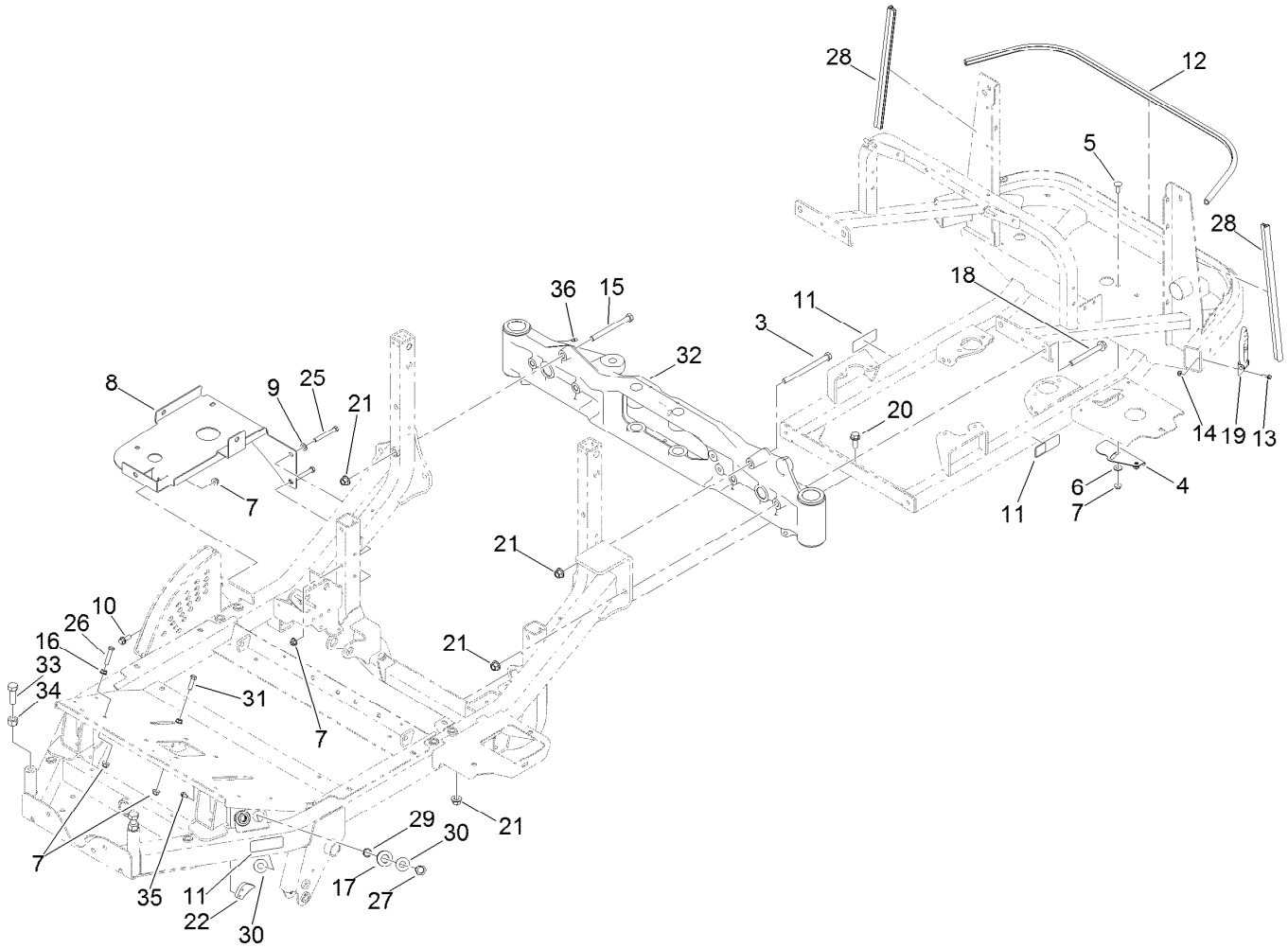

Frame and Rear Axle Assembly

Ref.	Part Number	Qty.	Description
3	325-33	1	Screw-HH
4	117-3190	1	Cover-Lower
5	3231-22	2	Screw-CARR
6	66-2920	2	Washer-Friction
7	104-8301	7	Nut-Flange, NI
8	117-3385-03	1	Bracket-Tank, HYD
9	3256-24	2	Washer-Flat
10	3234-24	1	Screw-HHF
11	106-9206	4	Decal-Torque, Wheel
12	117-3311	1	Seal-Bulb
13	3234-4	2	Screw-HHF
14	104-7201	2	Nut-Flange, NI
15	325-22	1	Screw-HH
16	3290-357	2	Nut-HHF, Whiz
17	240-4	2	Grommet-Rubber
18	117-3176	4	Screw-HHF

Ref.	Part Number	Qty.	Description
19	103-2898	2	Latch-Rubber
20	3234-38	3	Screw-HHF
21	99-5107	9	Nut-Lock
22	99-7214	1	Pawl-Brake
25	323-14	2	Screw-HH
26	323-53	1	Screw-HH
27	340-70	2	Nut-Lock
28	107-2269	2	Seal-Bulb
29	69-8970	2	Spacer
30	69-8940	4	Washer
31	323-7	1	Screw-HH
32	131-1931	1	Rear Axle ASM
33	327-6	2	Screw-HH
34	3217-11	2	Nut-Hex
35	3234-13	2	Screw-HHF
36	302-5	2	Fitting-Grease

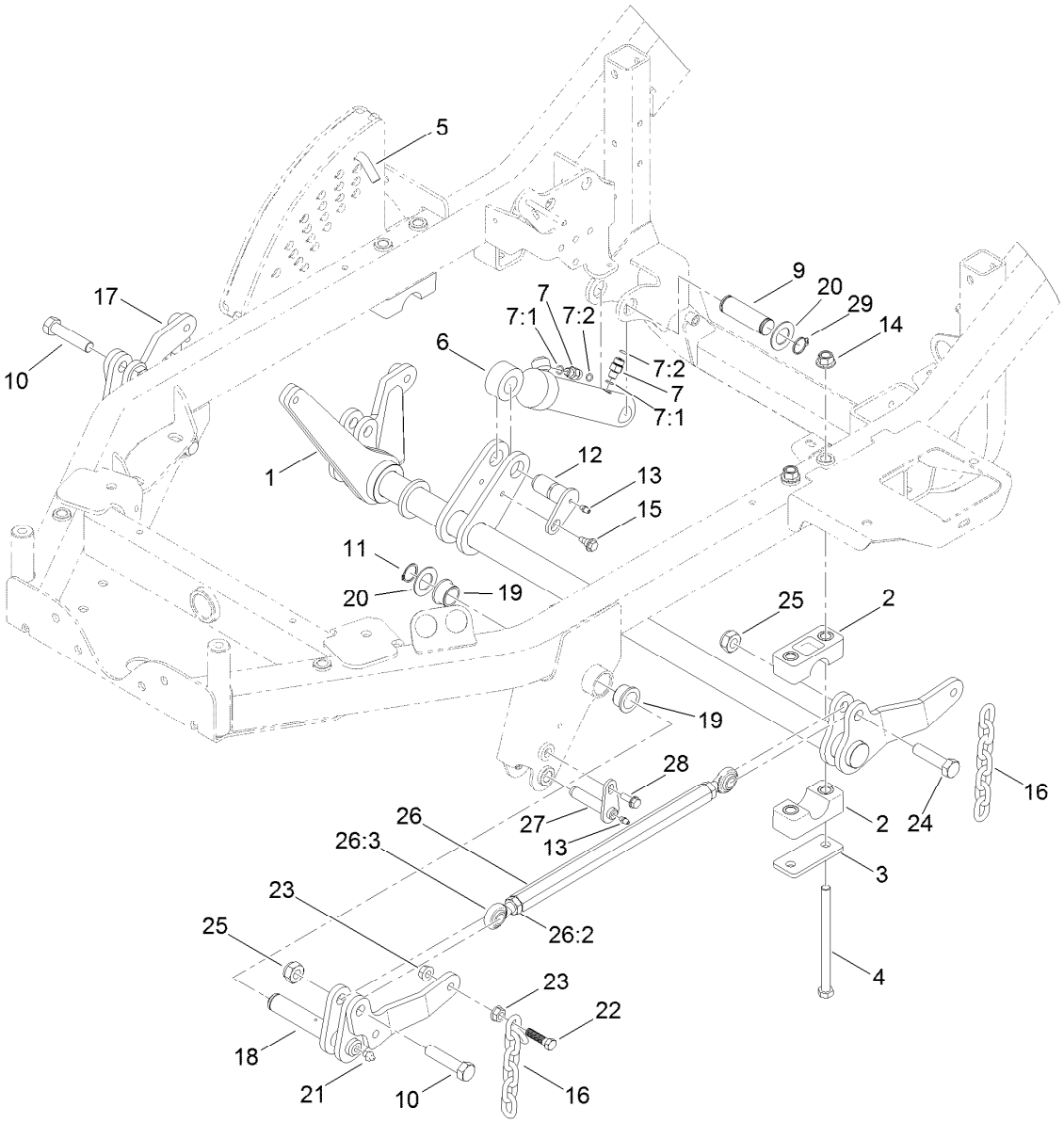

Lift Shaft and Linkage Assembly

Ref.	Part Number	Qty.	Description
1	115-0190-03	1	Shaft-Lift
2	115-0491	4	Cap-Bearing
3	117-2903	2	Plate-Bearing
4	325-37	4	Screw-HH
5	112-9544	1	Pin-HOC
6	110-9834	1	HYD Cylinder ASM
7	340-92	2	Fitting-Str
7:1	237-78	1	O-Ring
7:2	237-21	1	O-Ring
9	115-0183	1	Shaft-Cylinder, Lift
10	327-8	2	Screw-HH
11	32151-29	2	Ring-Retaining
12	125-1910	1	Pin-Pivot
13	302-5	3	Fitting-Grease
14	99-5107	4	Nut-Lock
15	99-5105	1	Bolt-Shoulder

Ref.	Part Number	Qty.	Description
16	119-1385	4	Chain-HOC
17	119-1380-03	1	Lift-RH
18	119-1383-03	1	Lift-LH
19	114-5680	4	Bushing-Flange
20	69-9010	4	Washer
21	302-2	2	Fitting-Grease
22	103-1898	4	Screw-HH
23	32128-37	8	Nut-HF
24	327-7	2	Screw-HH
25	3296-61	4	Nut-Lock
26	114-4059	2	Link ASM
26:2	3220-6	2	Nut-Jam
26:3	1-633029	2	Balljoint-Spherical
27	112-1602	2	Pin-Retainer
28	32144-41	2	Screw-Taptite
29	32151-36	2	Ring-Retaining

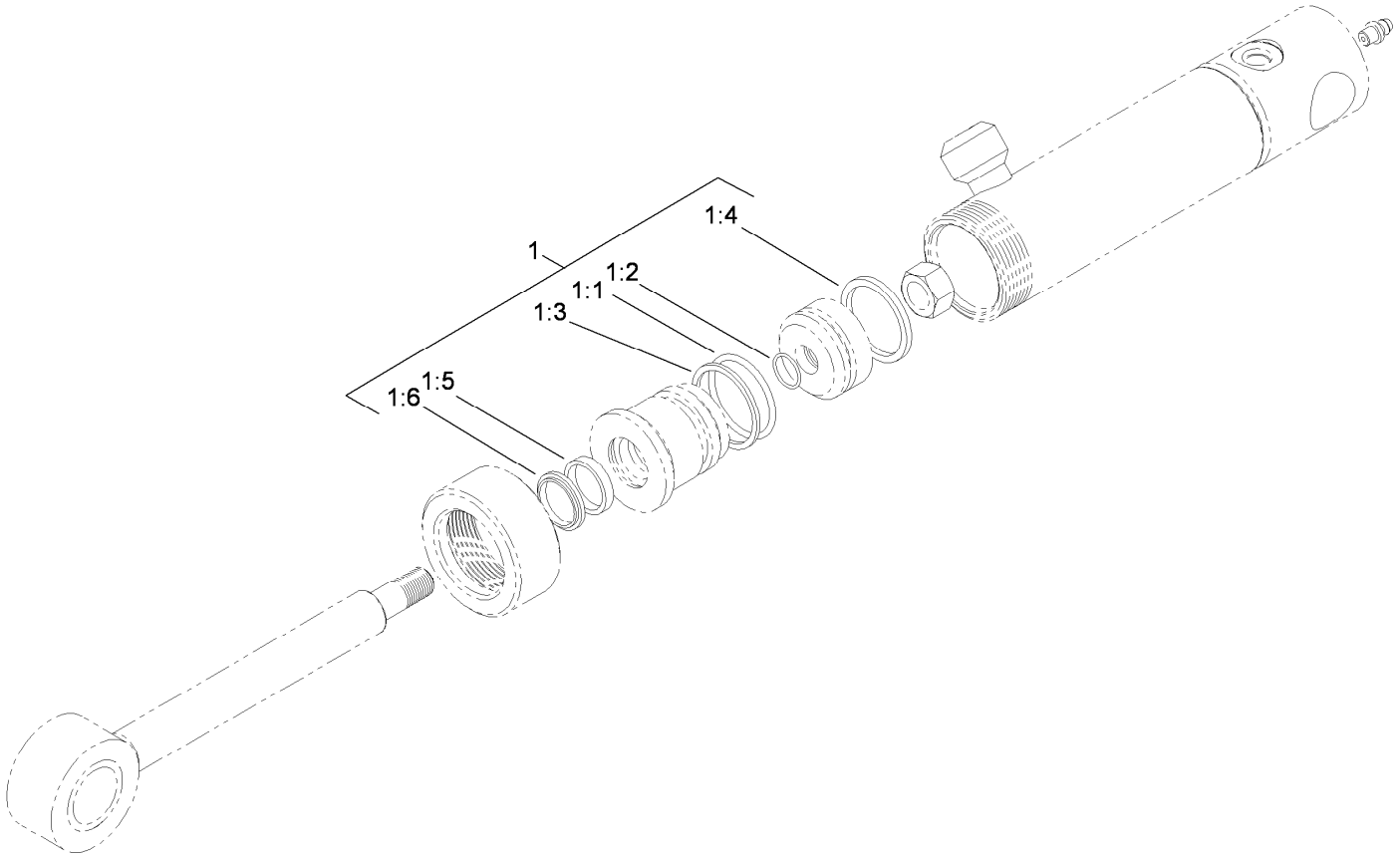

Hydraulic Cylinder Assembly No. 110-9834

Ref.	*Part Number*	*Qty.*	*Description*
1	112-6353	1	Seal Kit
1:1		1	O-Ring ●
1:2		1	O-Ring ●
1:3		1	Backup ●
1:4		1	Seal-Bp ●
1:5		1	Seal-Rod ●
1:6		1	Seal-Dust ●

● Not serviced separately

Platform and Roll-Over Protection System Assembly

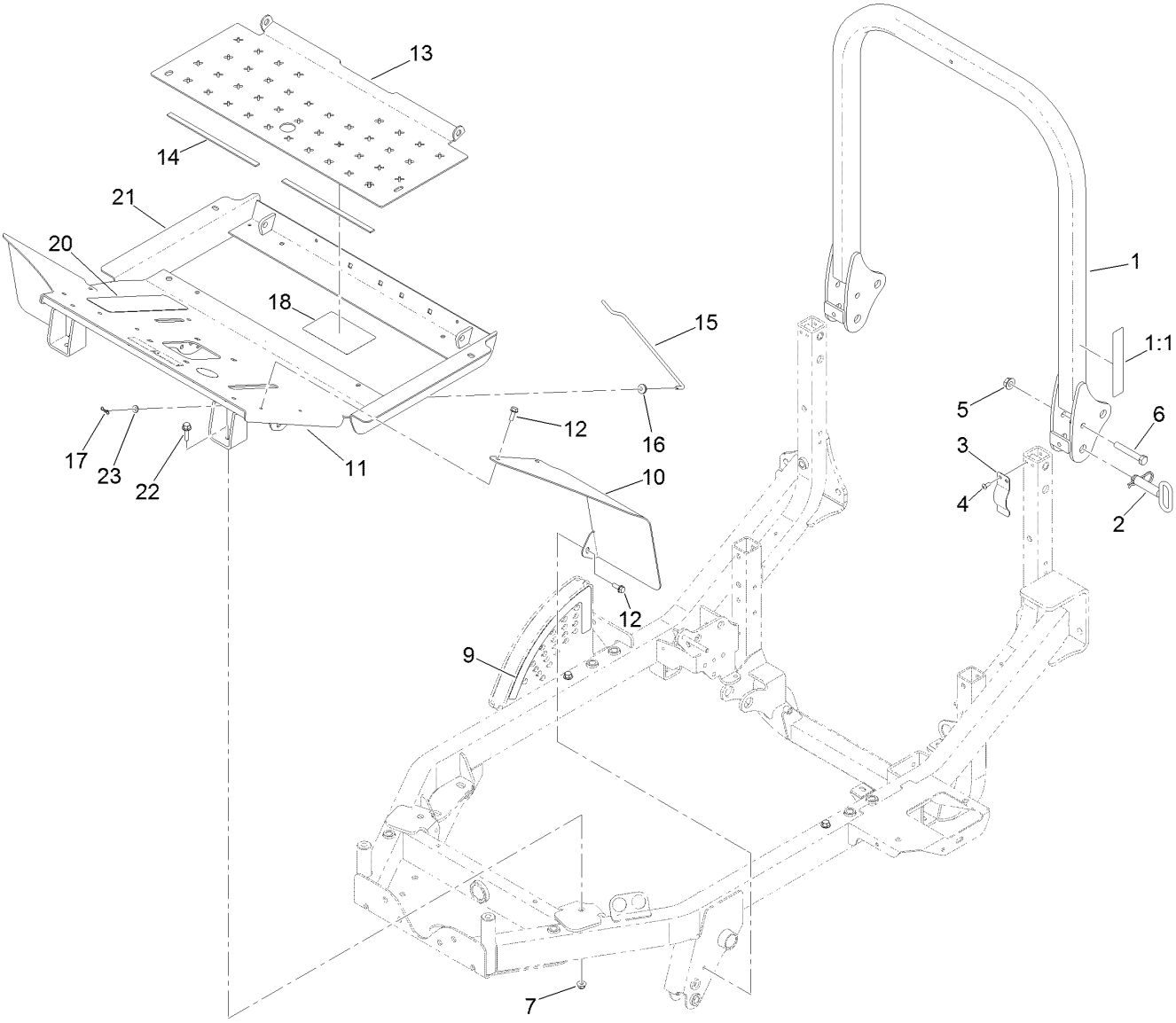

Platform and Roll-Over Protection System Assembly (continued)

Ref.	Part Number	Qty.	Description
1	127-6520	1	ROPS ASM
1:1	117-3272	1	Decal-Danger, ROPS
2	103-4553	2	Pin-Fold, ROPS
3	110-5696	2	Spring-Leaf
4	3290-412	4	Rivet
5	32128-23	2	Nut-HF
6	112-7264	2	Screw-HH
7	104-8301	2	Nut-Flange, NI
9	132-6552	1	Decal-HOC
10	117-3203-03	1	Fender-Front, LH
11	117-3202-03	1	Fender-Front, RH

Ref.	Part Number	Qty.	Description
12	32144-41	6	Screw-Taptite
13	117-3204-03	1	Plate-Floor
14	115-8827	2	Foam-Strip
15	110-9847	1	Rod-Prop
16	237-141	1	Grommet-Rubber
17	119-1414	1	Pin-Cotter, Locking
18	112-1461	1	Decal-Routing, Belt
20	71-0440	1	Abrasive-Pedal
21	119-1398-01	1	Platform
22	3234-24	4	Screw-HHF
23	3256-22	1	Washer-Flat

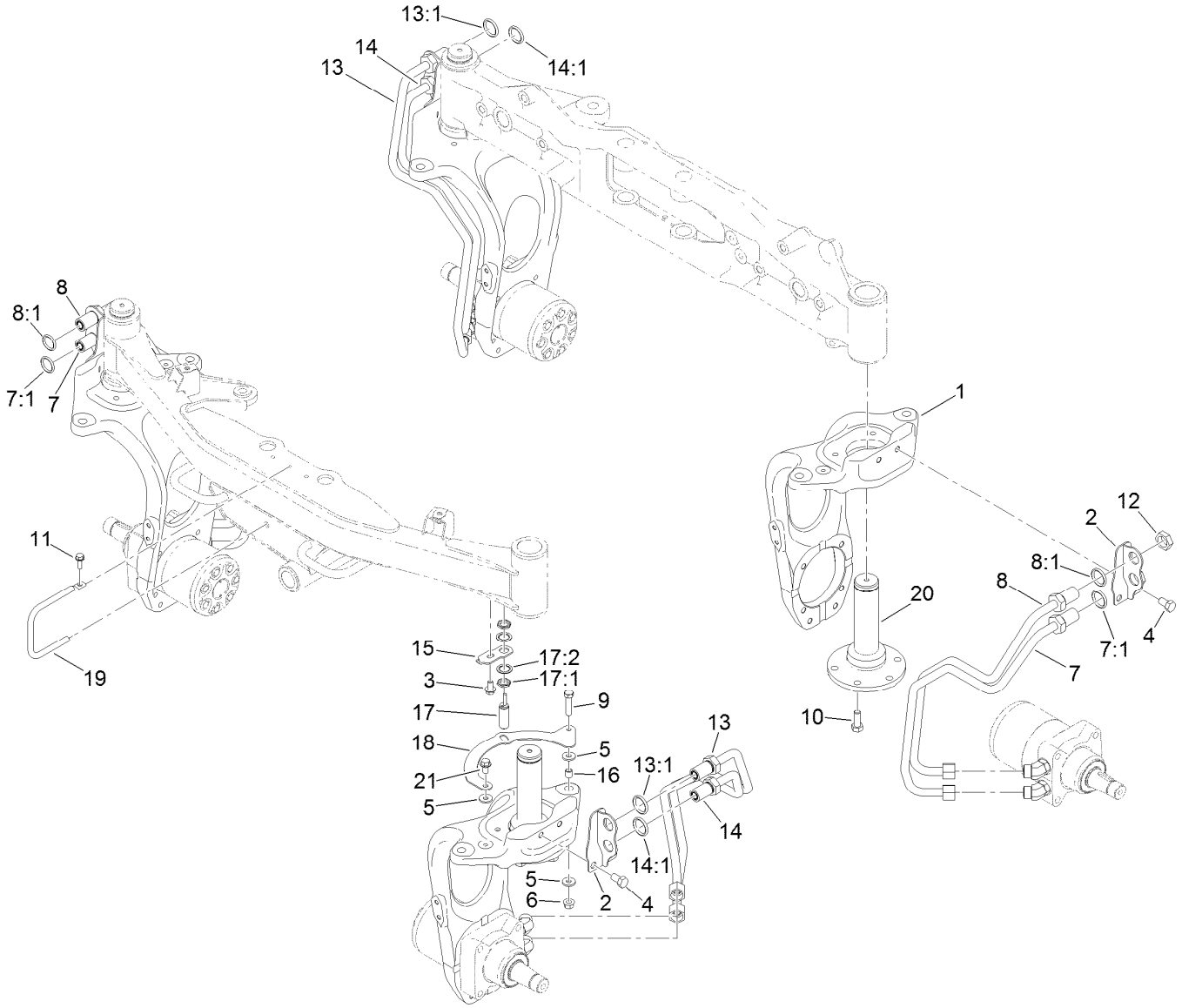

4 Wheel Drive Steering Assembly

Ref.	Part Number	Qty.	Description
1	117-2951	4	Base-Fork, Steer
2	132-6556-03	4	Bracket-Bulkhead
3	110-9380	1	Screw-HWH
4	325-3	8	Screw-HH
5	5-0838	3	Washer
6	32128-21	1	Nut-HF
7	117-2948	2	Upper Tube ASM
7:1	237-65	1	O-Ring
8	117-2949	2	Lower Tube ASM
8:1	237-65	1	O-Ring
9	323-8	1	Screw-HH
10	117-3266	20	Screw-HH
11	32144-41	1	Screw-Taptite
12	340-74	8	Nut-Lock, Bulkhead

Ref.	Part Number	Qty.	Description
13	117-2946	2	Upper Tube ASM
13:1	237-65	1	O-Ring
14	117-2947	2	Lower Tube ASM
14:1	237-65	1	O-Ring
15	119-1413	1	Bracket-Sensor
16	103-1166	1	Spacer-Tube, Pump Link
17	115-5300	1	Proximity Switch ASM
17:1	117-3207	2	Nut-Hex
17:2	117-3208	2	Washer-Lock, Internal Tooth
18	117-2216-03	1	Bracket-Target
19	117-3178	1	Rod-Guide
20	117-3361	4	Spindle-Steer
21	3234-47	1	Screw-HHF

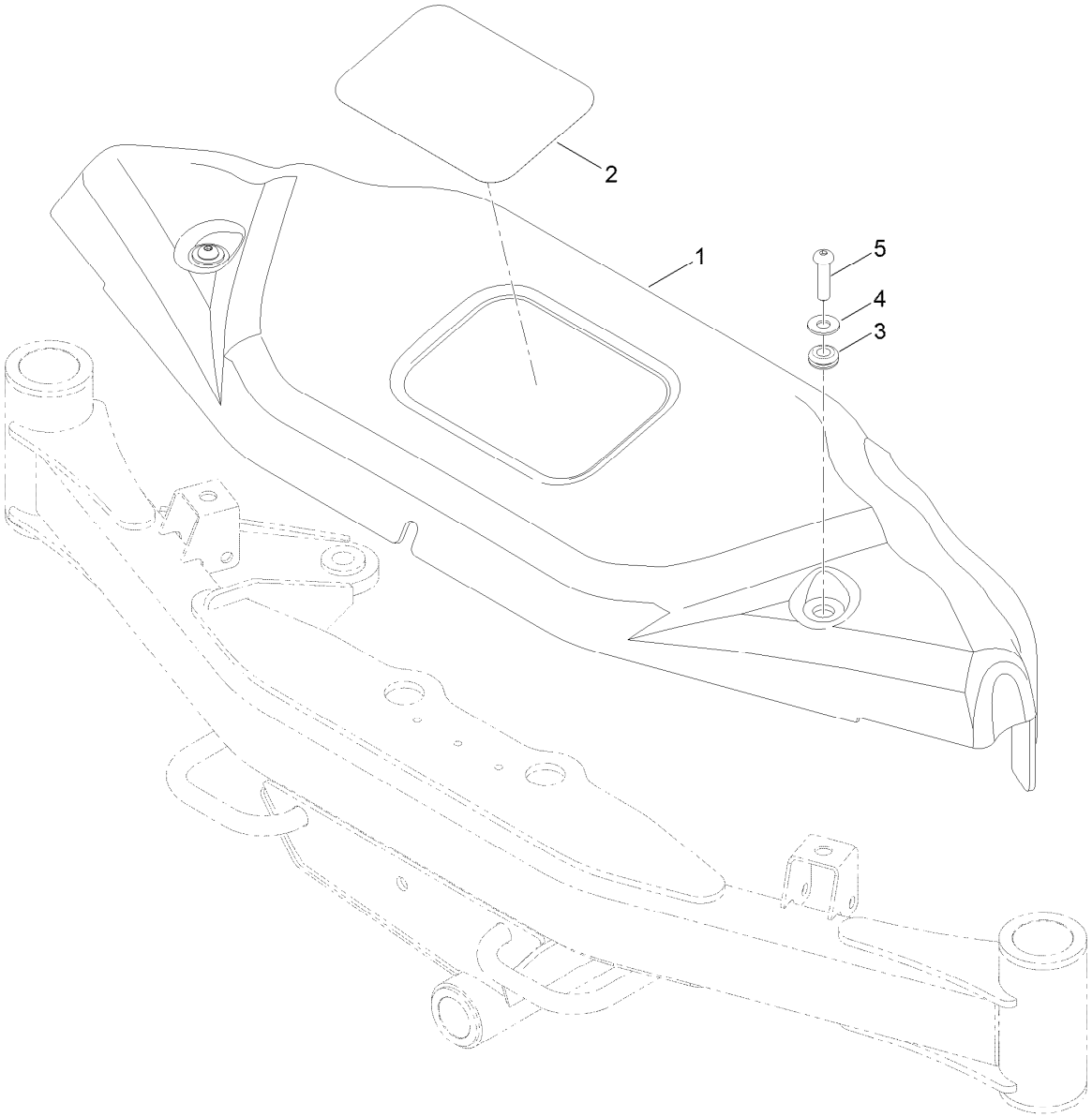

Front Cover Assembly

Ref.	Part Number	Qty.	Description
1	125-2828	1	Cover-Front
2	104-7213	1	Decal
3	1-633630	2	Grommet
4	100-7403	2	Washer-Flat
5	95-3857	2	Screw-HSBH

Front Axle and Tie Rod Assembly

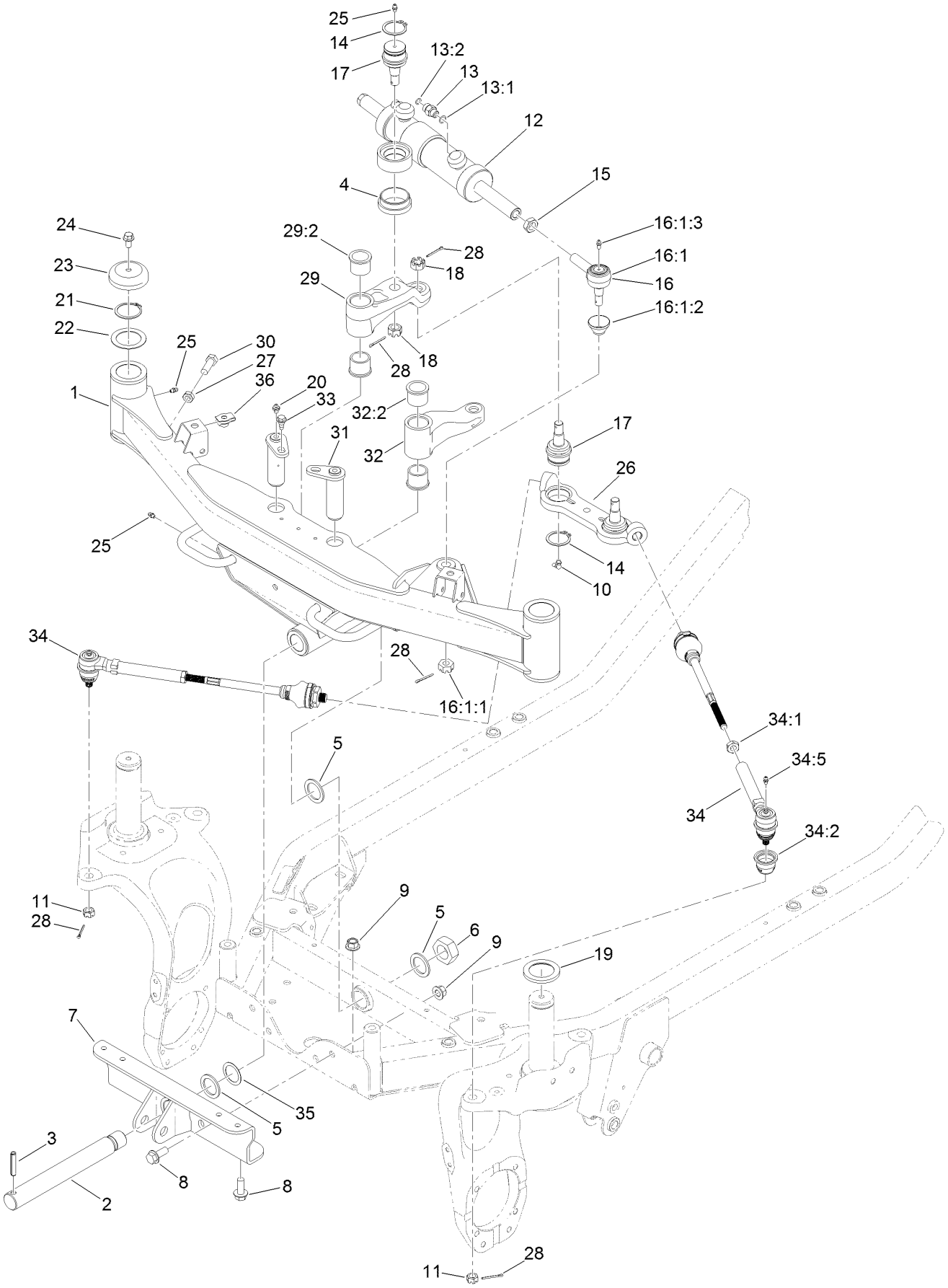

Front Axle and Tie Rod Assembly (continued)

Ref.	Part Number	Qty.	Description
1	125-2825	1	Front Axle ASM
2	119-1376	1	Shaft-Pivot
3	32121-110	1	Pin-Roll, Slotted
4	120-0238	1	Spacer-Cylinder
5	98-1452	3	Washer-Thrust
6	3296-68	1	Nut-Lock, NI
7	117-2920-03	1	Support-Axle
8	3234-38	6	Screw-HHF
9	99-5107	6	Nut-Lock
10	302-60	2	Fitting-Grease
11	32136-3	2	Nut-SHH
12	125-2835	1	HYD Cylinder ASM
13	340-2	2	Fitting-Str
13:1	237-22	1	O-Ring
13:2	237-42	1	O-Ring
14	32151-104	3	Ring-Retaining, External
15	84-5300	1	Nut-Jam
16	71-4740-03	1	RH Tie Rod End ASM
16:1		1	End-Rod, Tie (RH) ●■
16:1:1	105-7941	1	Nut-Hex, Slotted ●
16:1:2	105-7835	1	Seal ●
16:1:3	302-5	1	Fitting-Grease
17	106-6774	3	Joint-Ball
18	32136-2	3	Nut-SHH
19	100-2508	2	Washer-Thrust
20	302-2	2	Fitting-Grease
21	100-4196	2	Ring-Retaining
22	115-0169	2	Washer-Thrust
23	100-3362	2	Cap-Spindle
24	3234-12	2	Screw-HHF
25	302-5	4	Fitting-Grease
26	117-2986	1	Centerlink
27	3218-5	2	Nut-Jam
28	3272-12	6	Pin-Cotter
29	120-0391	1	Front LH Arm ASM
29:2	94-8947	2	Bushing-Flange
30	325-6	2	Screw-HH
31	117-3167	2	Front Pin ASM
32	120-0390	1	Front RH Arm ASM
32:2	94-8947	2	Bushing-Flange
33	99-5105	2	Bolt-Shoulder
34	117-2983	2	Rod-Tie, Front
34:1	42-9650	1	Nut-Hex, Jam
34:2	117-3287	1	Dust Boot
34:5	302-5	1	Fitting-Grease
35	93-4628	1	Washer
36	105-4886	2	Nut-Tinnerman

● Not illustrated

■ Not serviced separately

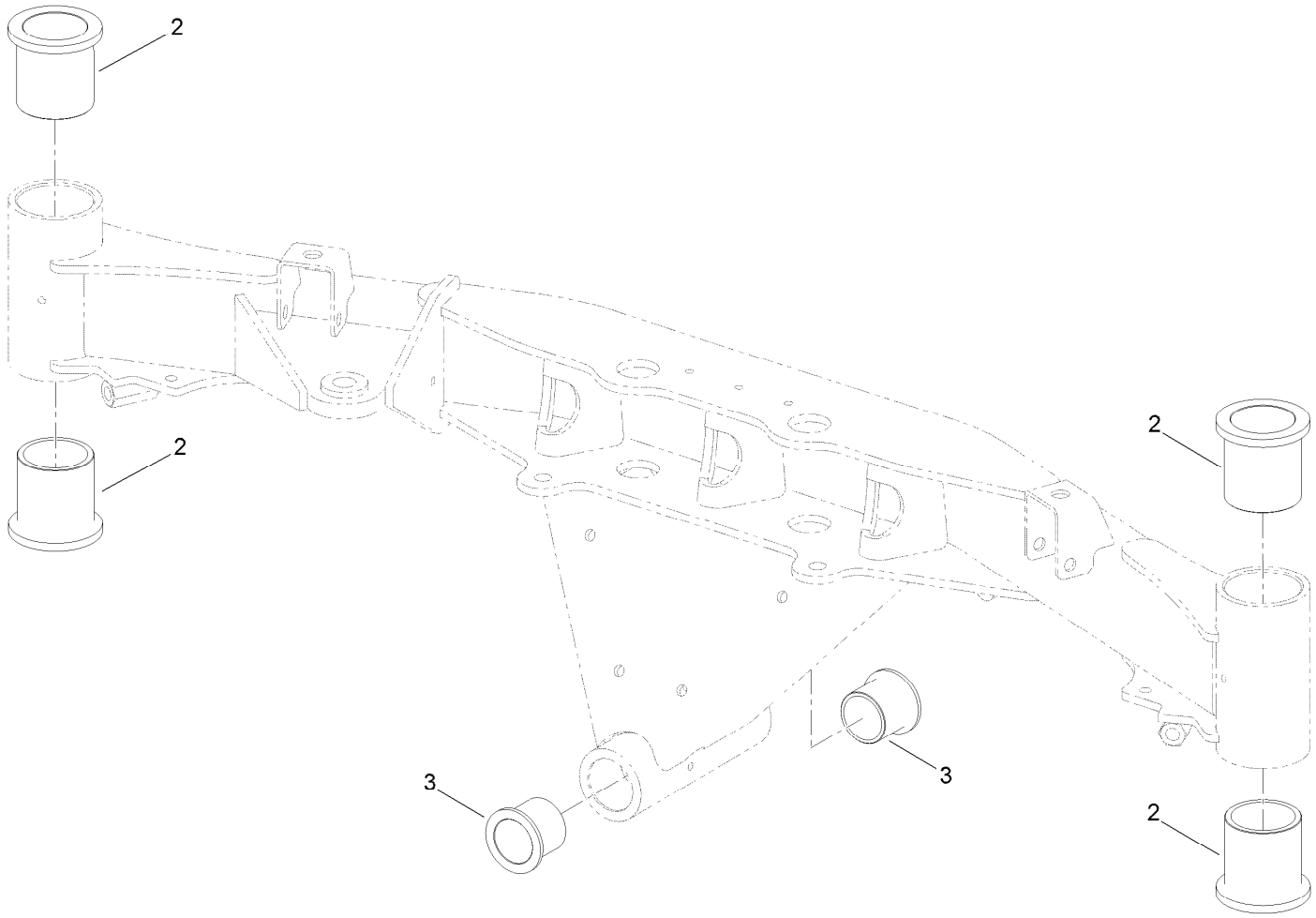

Front Axle Assembly No. 125-2825

Ref.	*Part Number*	*Qty.*	*Description*
2	125-4386	4	Bushing-Castor
3	69-6470	2	Bushing-Castor

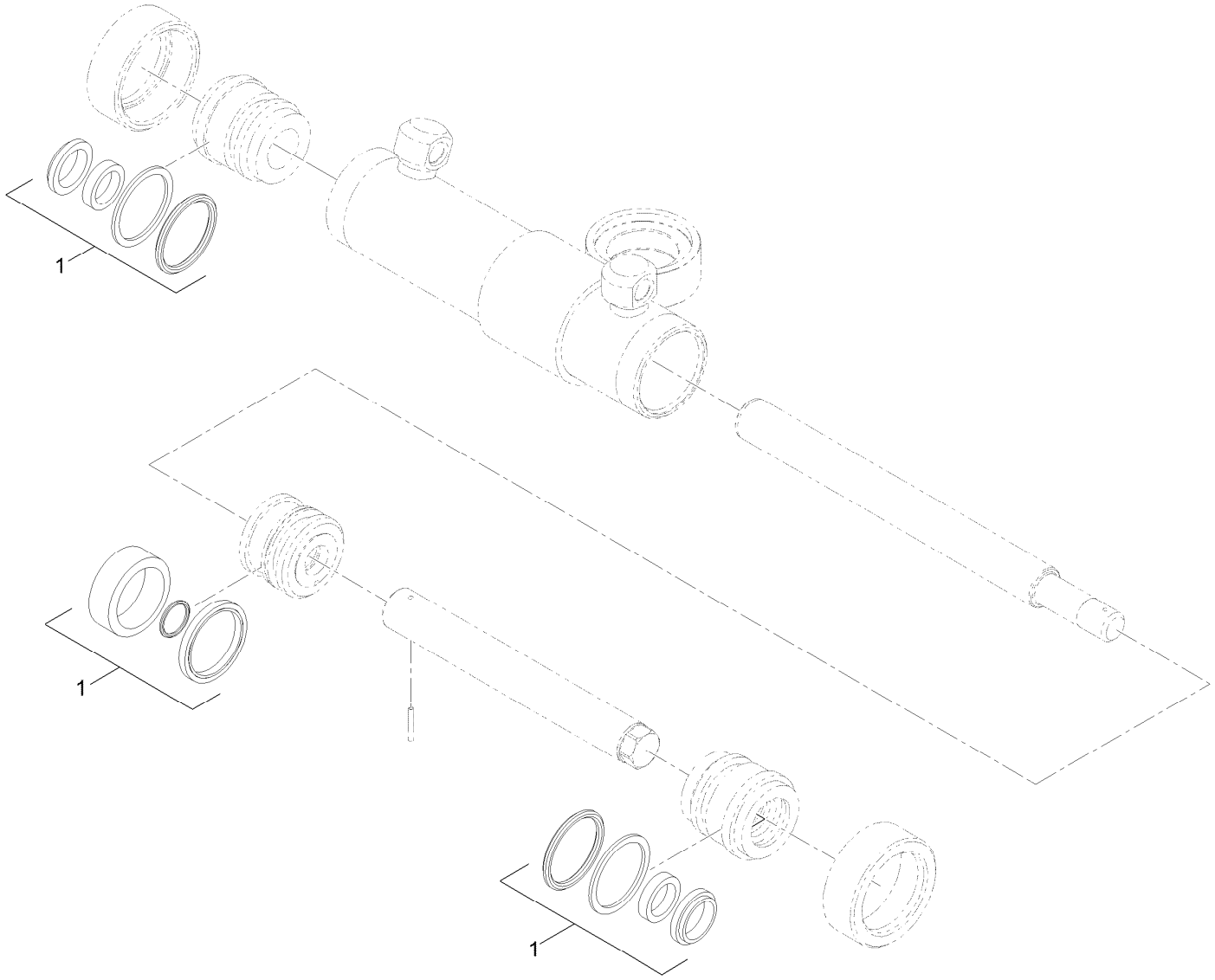

Hydraulic Cylinder Assembly No. 125-2835

Ref.	*Part Number*	*Qty.*	*Description*
1	120-2557	1	Seal Kit

Rear Steering Assembly

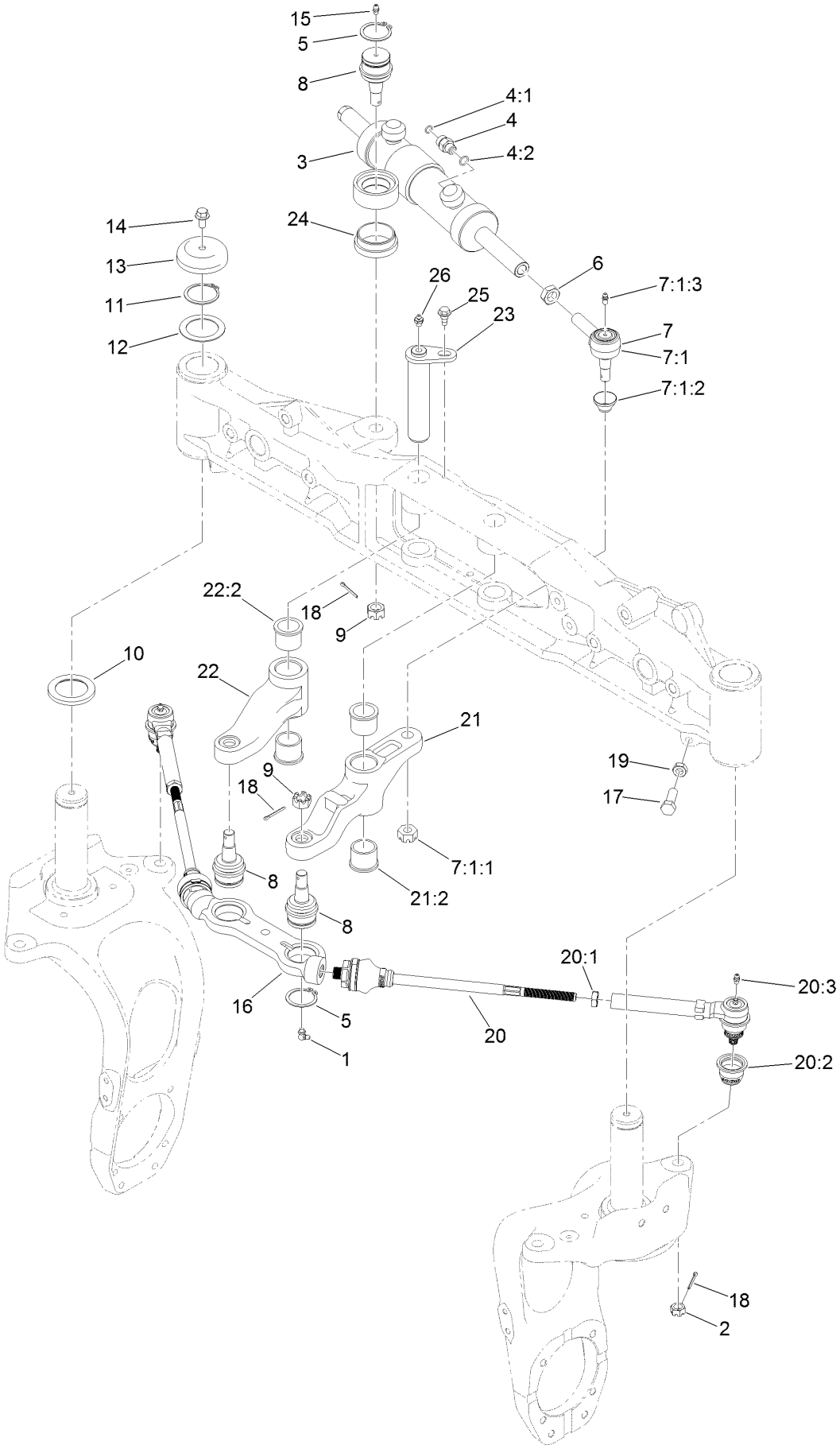

Rear Steering Assembly (continued)

Ref.	Part Number	Qty.	Description
1	302-60	2	Fitting-Grease
2	32136-3	2	Nut-SHH
3	125-2835	1	HYD Cylinder ASM
4	340-2	2	Fitting-Str
4:1	237-22	1	O-Ring
4:2	237-42	1	O-Ring
5	32151-104	3	Ring-Retaining, External
6	84-5300	1	Nut-Jam
7	71-4740-03	1	RH Tie Rod End ASM
7:1		1	End-Rod, Tie (RH) ●■
7:1:1	105-7941	1	Nut-Hex, Slotted ●
7:1:2	105-7835	1	Seal ●
7:1:3	302-5	1	Fitting-Grease
8	106-6774	3	Joint-Ball
9	32136-2	3	Nut-SHH
10	100-2508	2	Washer-Thrust
11	100-4196	2	Ring-Retaining
12	115-0169	2	Washer-Thrust
13	100-3362	2	Cap-Spindle
14	3234-12	2	Screw-HHF
15	302-5	1	Fitting-Grease
16	117-2986	1	Centerlink
17	325-6	2	Screw-HH
18	3272-12	6	Pin-Cotter
19	3218-5	2	Nut-Jam
20	117-2984	2	Rod-Tie, Rear
20:1	42-9650	1	Nut-Hex, Jam
20:2	117-3287	1	Dust Boot
20:3	302-5	1	Fitting-Grease
21	125-2832	1	Rear LH Arm ASM
21:2	94-8947	2	Bushing-Flange
22	120-0392	1	Rear RH Arm ASM
22:2	94-8947	2	Bushing-Flange
23	117-3137	2	Pin ASM
24	120-0238	1	Spacer-Cylinder
25	99-5105	2	Bolt-Shoulder
26	302-2	2	Fitting-Grease

● Not illustrated

■ Not serviced separately

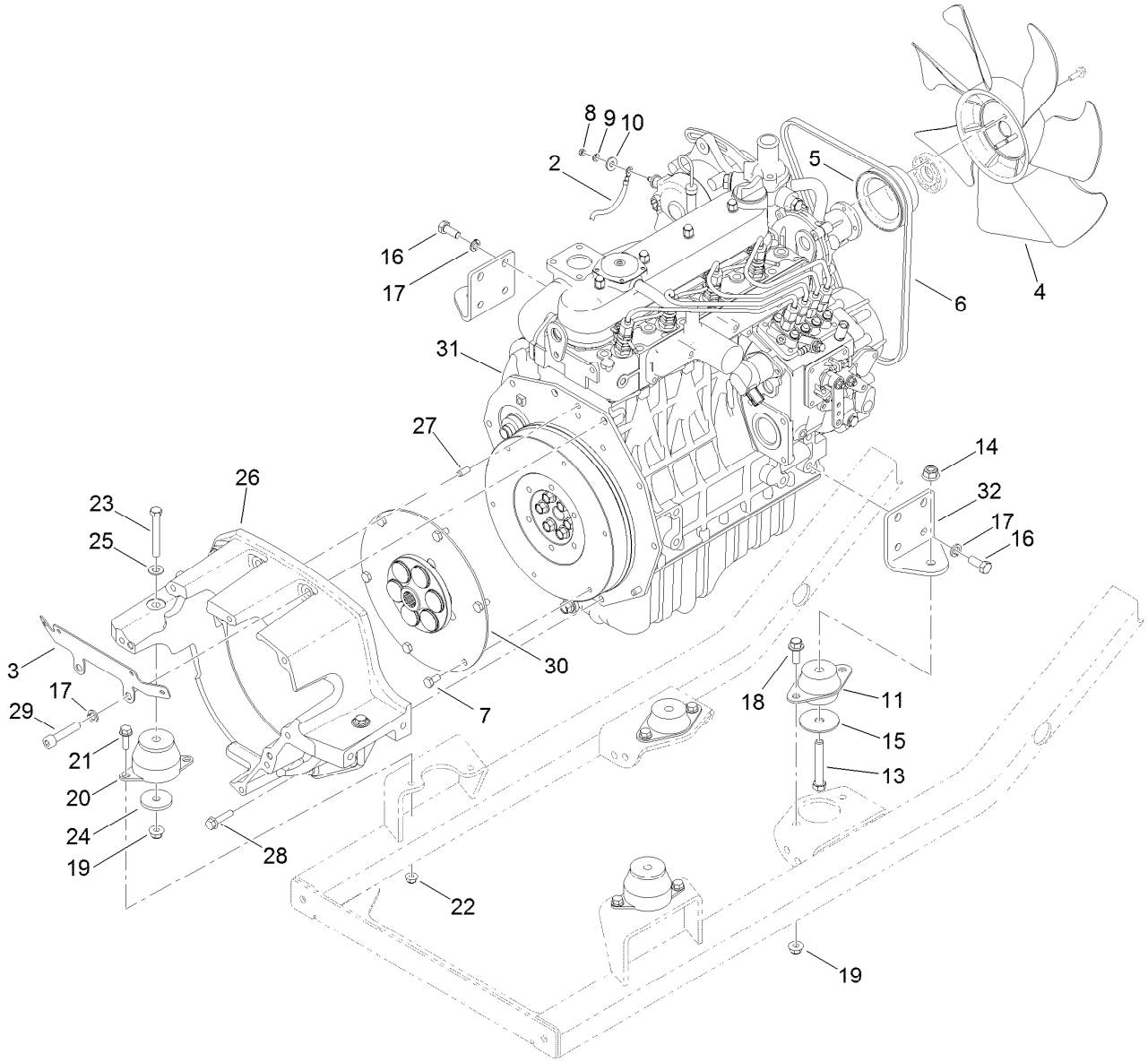

Engine Component Assembly

Ref.	Part Number	Qty.	Description
2	100-5552	1	Harness-Wire
3	117-3173-03	1	Support-Cable
4	107-9096	1	Fan-Cooling
5	99-3453	1	Pulley-Fan
6	115-0123	1	V-Belt
7	99-5132	6	Bolt
8	33013-00	1	Nut-Hex
9	43-5930	1	Washer-Lock, Spring
10	3256-2	1	Washer-Flat
11	53-9681	2	Mount-Engine
13	324-11	2	Screw-HH
14	114-8417	2	Nut-HF, NI
15	87-5100	2	Washer-Snubbing
16	43-0090	8	Screw-HH
17	48-9590	10	Washer-Lock

Ref.	Part Number	Qty.	Description
18	3234-42	4	Screw-HHF
19	104-8301	6	Nut-Flange, NI
20	107-2289	2	Mount-Motor
21	3234-17	4	Screw-HHF
22	104-8300	4	Nut-Flange, NI
23	323-13	2	Screw-HH
24	80-8560	2	Washer-Hardened
25	3256-24	2	Washer-Flat
26	125-9219	1	Housing-Flywheel
27	87-1910	2	Pin-Dowel
28	33104-035	6	Screw-HHF
29	3274-106	2	Screw-HSH
30	110-9729	1	Coupling-Flywheel
31	125-2171	1	Engine-Kubota, V1505
32	115-0059-03	2	Plate-Mount, Motor

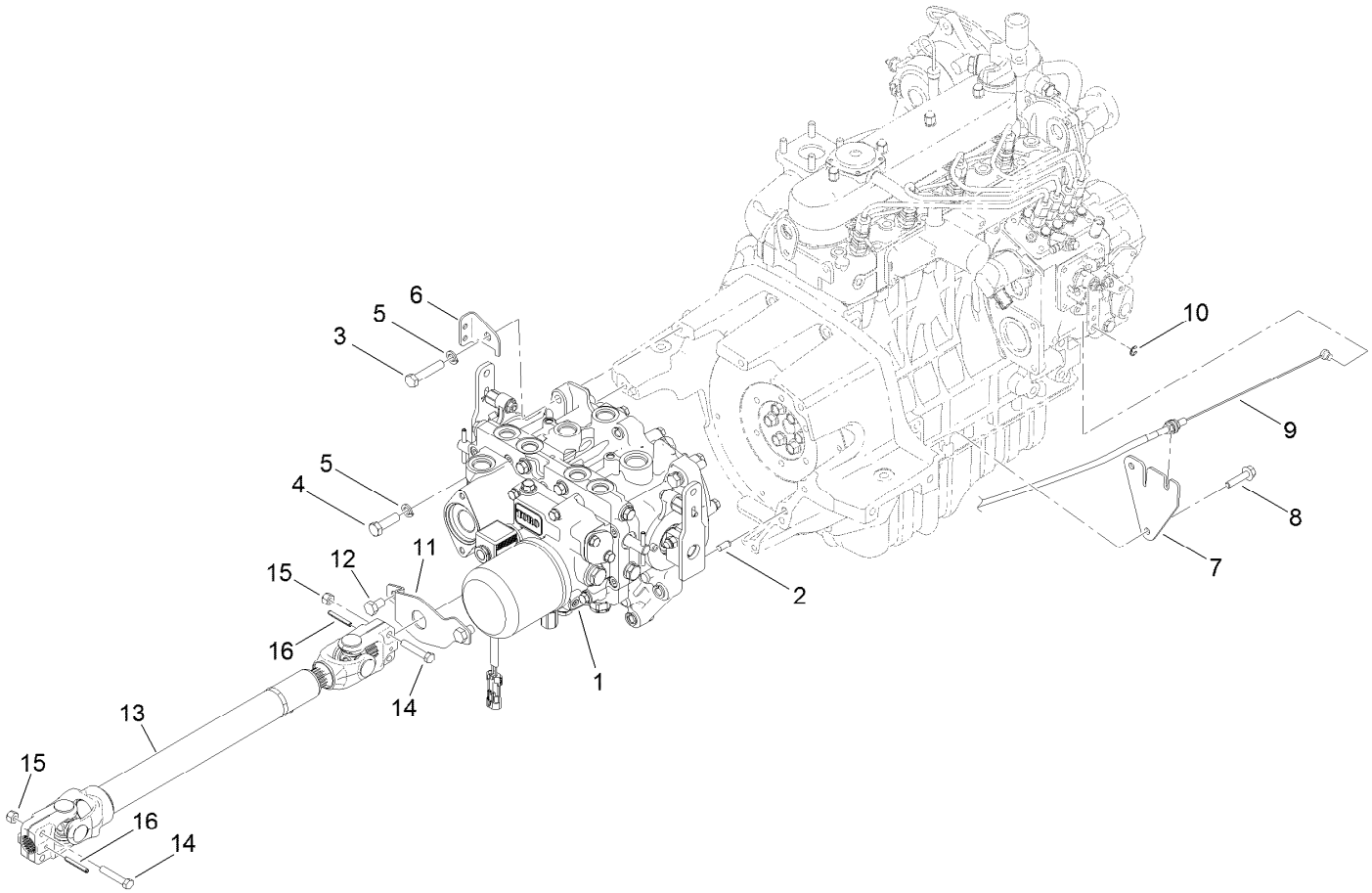

Transmission Component Assembly

Ref.	Part Number	Qty.	Description
1	125-9290	1	Transmisson ASM
2	87-1910	2	Pin-Dowel
3	33115-050	6	Screw-HH
4	33115-035	1	Screw-HH
5	48-9590	7	Washer-Lock
6	120-0239	1	Support-Tube
7	114-4060	1	Bracket-Throttle
8	33104-035	2	Screw-HHF

Ref.	Part Number	Qty.	Description
9	115-0339	1	Cable-Throttle/Choke
10	701197	1	E-Ring
11	114-4088	1	Shield-Seal
12	33115-016	2	Screw-HH
13	110-3575	1	Driveshaft ASM
14	322-9	4	Screw-HH
15	3296-29	4	Nut-Lock, NI
16	32121-34	2	Pin-Roll

Charge Pump Housing Assembly
Transmission Assembly No. 125-9290

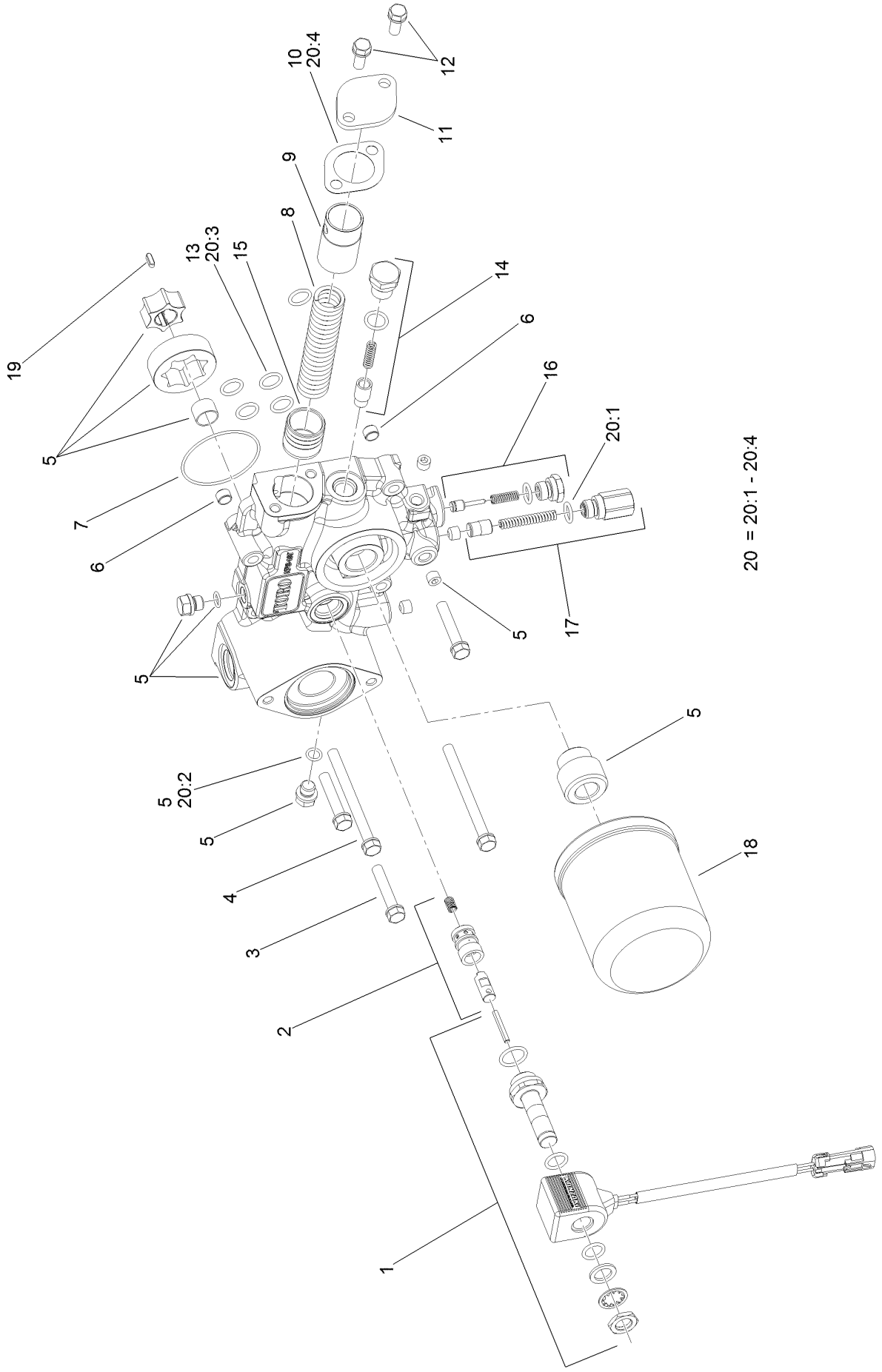

Charge Pump Housing Assembly
Transmission Assembly No. 125-9290 (continued)

Ref.	Part Number	Qty.	Description
1	107-0851	1	Solenoid ASM
2	107-0850	1	Solenoid Valve ASM
3	107-0863	3	Bolt
4	107-0864	2	Bolt
5	107-0840	1	Pump Body ASM
6	107-0848	2	Pin
7	107-0856	1	O-Ring
8	107-0845	1	Spring
9	107-0844	1	Collar
10	107-0847	1	Gasket
11	107-0846	1	Cover
12	93-0457	2	Bolt And Washer ASM
13	104-3298	1	Packing
14	107-0843	1	Filter Bypass Valve ASM
15	107-0818	1	Piston
16	120-5153	1	Charge Relief Valve ASM
17	107-0841	1	Pressure Valve ASM
18	108-5194	1	Filter-Oil, HYD
19	107-0865	1	Key
20	107-0855	1	Charge Pump Seal Kit
20:1	93-0418	2	O-Ring
20:2	107-0817	2	O Ring-Plug
20:3	104-3298	6	Packing
20:4	107-0847	1	Gasket

Center Section Assembly
Transmission Assembly No. 125-9290

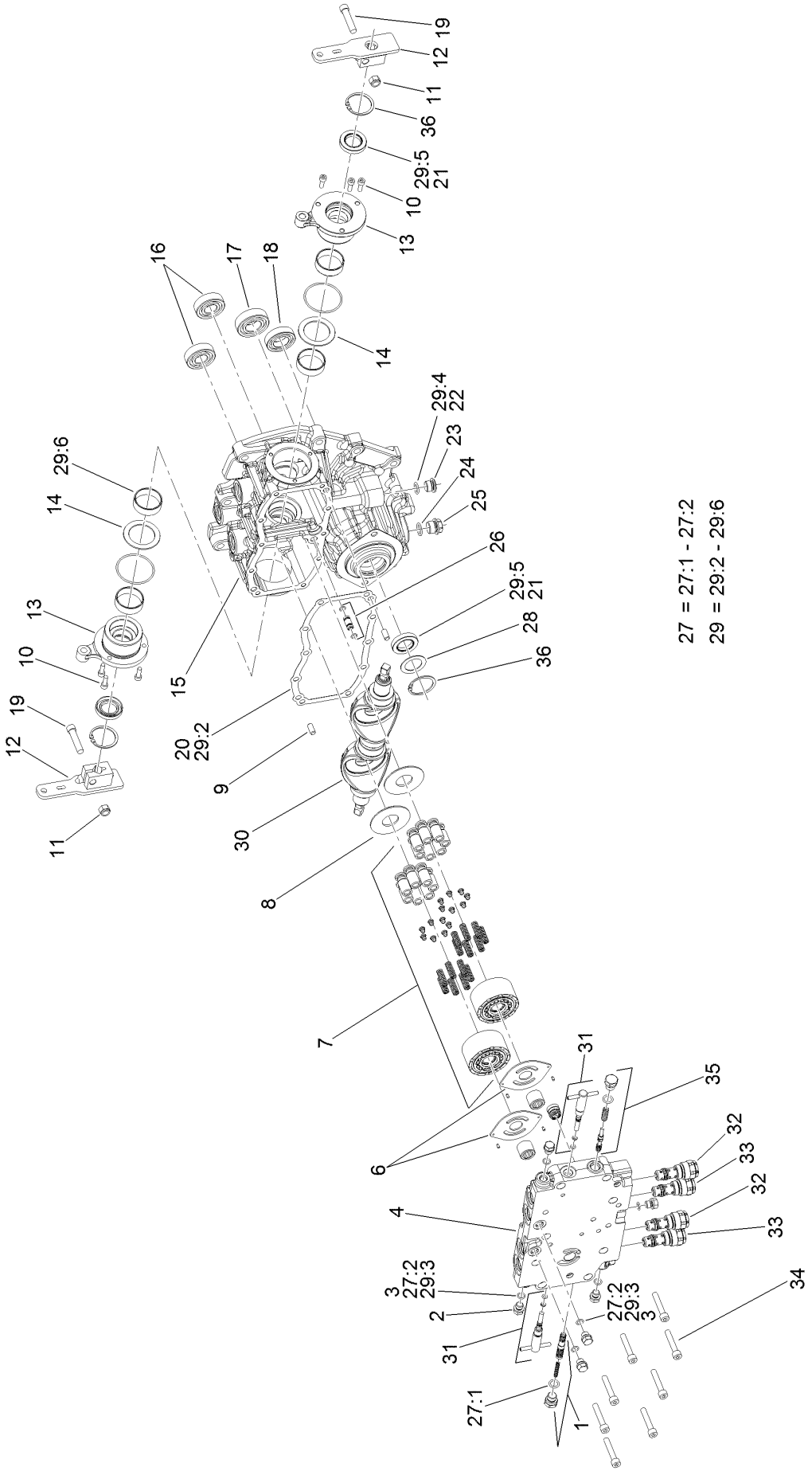

Center Section Assembly
Transmission Assembly No. 125-9290 (continued)

Ref.	Part Number	Qty.	Description
1	107-0807	1	Valve-Flushing, RH
2	107-0857	6	Plug
3	107-0817	6	O Ring-Plug
4	120-5150	1	Center Case ASM
6	107-0805	2	Plate-Valve
7	107-0824	2	Cylinder Block ASM
8	107-0830	2	Plate-Thrust
9	92-0765	4	Pin-Parallel
10	107-0859	6	Bolt
11	120-6681	2	U-Nut
12	131-5505	2	Arm-Control
13	107-0832	2	Side Cover ASM
14	107-0829	2	Washer
15	120-5151	1	Pump Housing ASM
16	107-0826	2	Bearing
17	107-0821	1	Bearing
18	107-0838	1	Bearing
19	120-6682	2	Bolt
20	107-0810	2	Gasket-Case, Center
21	107-0814	1	Seal
22	104-3298	1	Packing

Ref.	Part Number	Qty.	Description
23	107-0861	1	Plug-NPTF
24	237-79	1	O-Ring
25	107-0867	1	Plug
26	107-0812	1	Pipe
27	107-0852	1	Center Case Seal Kit
27:1	93-0418	2	O-Ring
27:2	107-0817	6	O Ring-Plug
28	107-0813	1	Spacer
29	107-0853	1	Pump Housing Seal Kit
29:2	107-0810	1	Gasket-Case, Center
29:3	107-0817	2	O Ring-Plug
29:4	104-3298	1	Packing
29:5	107-0814	3	Seal
29:6	107-0825	4	Ring-Seal
30	120-6679	2	Plate-Swash
31	107-0808	2	Valve-Bypass
32	107-0804	2	Valve-Rear
33	107-0803	2	Valve-Front
34	107-0863	8	Bolt
35	107-0806	1	Valve-Flushing, LH
36	92-0757	2	Ring-Snap

Gear Case and Clutch Assembly
Transmission Assembly No. 125-9290

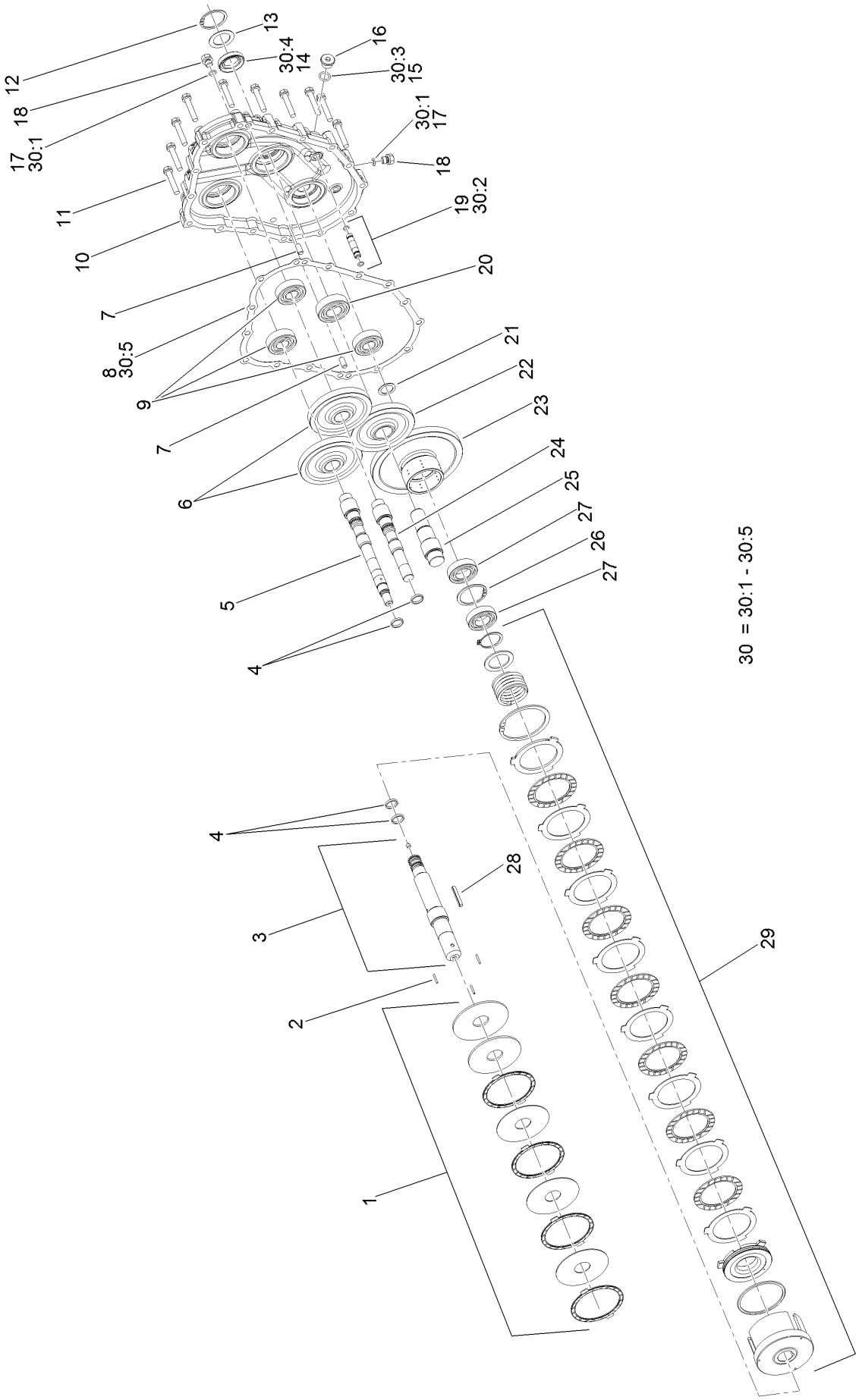

Gear Case and Clutch Assembly
Transmission Assembly No. 125-9290 (continued)

Ref.	Part Number	Qty.	Description
1	107-0839	1	PTO Brake ASM
2	107-0837	3	Rod-Push
3	107-0833	1	PTO Shaft ASM
4	107-0825	2	Ring-Seal
5	107-0827	1	Shaft-Pump
6	107-0823	2	Gear-Pump
7	92-0765	4	Pin-Parallel
8	107-0816	1	Gasket-Housing, Gear
9	107-0826	4	Bearing
10	120-5152	1	Housing-Case, Gear
11	107-0863	13	Bolt
12	92-0757	1	Ring-Snap
13	107-0813	1	Spacer
14	107-0814	1	Seal
15	104-3298	1	Packing
16	107-0861	1	Plug-NPTF
17	107-0817	6	O Ring-Plug
18	107-0857	6	Plug
19	107-0811	1	Pipe
20	107-0821	2	Bearing
21	107-0836	1	Spacer
22	107-0820	1	Gear-Input
23	107-0834	1	Gear-PTO
24	107-0822	1	Shaft-Pump
25	107-0819	1	Shaft-Input
26	92-0758	1	Ring-Snap
27	107-0838	3	Bearing
28	107-0866	1	Key
29	107-0835	1	Clutch Cylinder ASM
30	107-0854	1	Gear Housing Seal Kit
30:1	107-0817	2	O Ring-Plug
30:2		2	O-Ring ●
30:3	104-3298	1	Packing
30:4	107-0814	1	Seal
30:5	107-0816	1	Gasket-Housing, Gear

● Not serviced separately

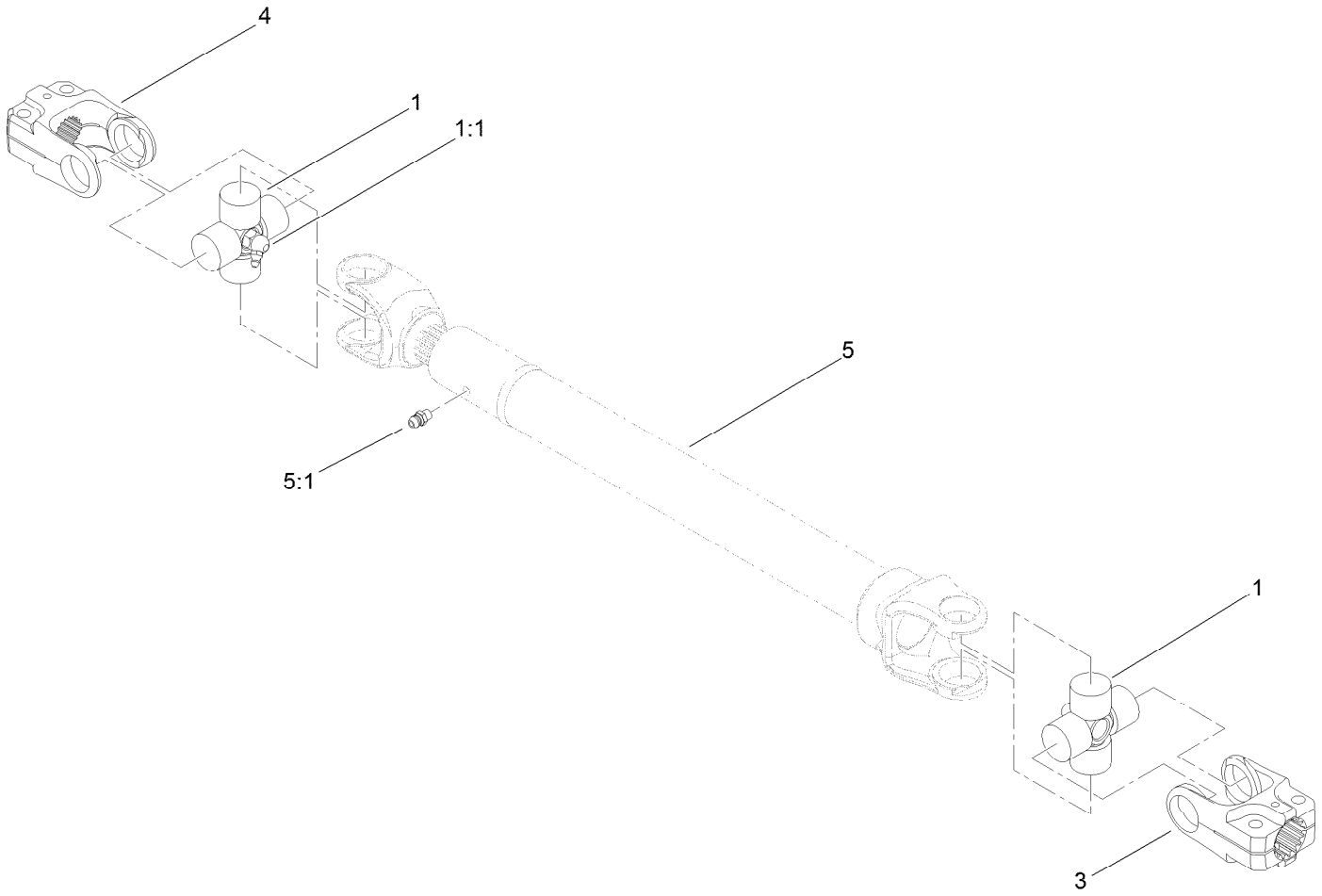

Driveshaft Assembly No. 110-3575

Ref.	*Part Number*	*Qty.*	*Description*
1	112-1687	2	Cross And Bearing Kit
1:1	62-3820	1	Fitting-Grease
3	54-9040	1	Yoke-End
4	54-9090	1	Yoke-End
5		1	Tube-Yoke, Slip ●
5:1	302-22	1	Fitting-Grease

● Not serviced separately

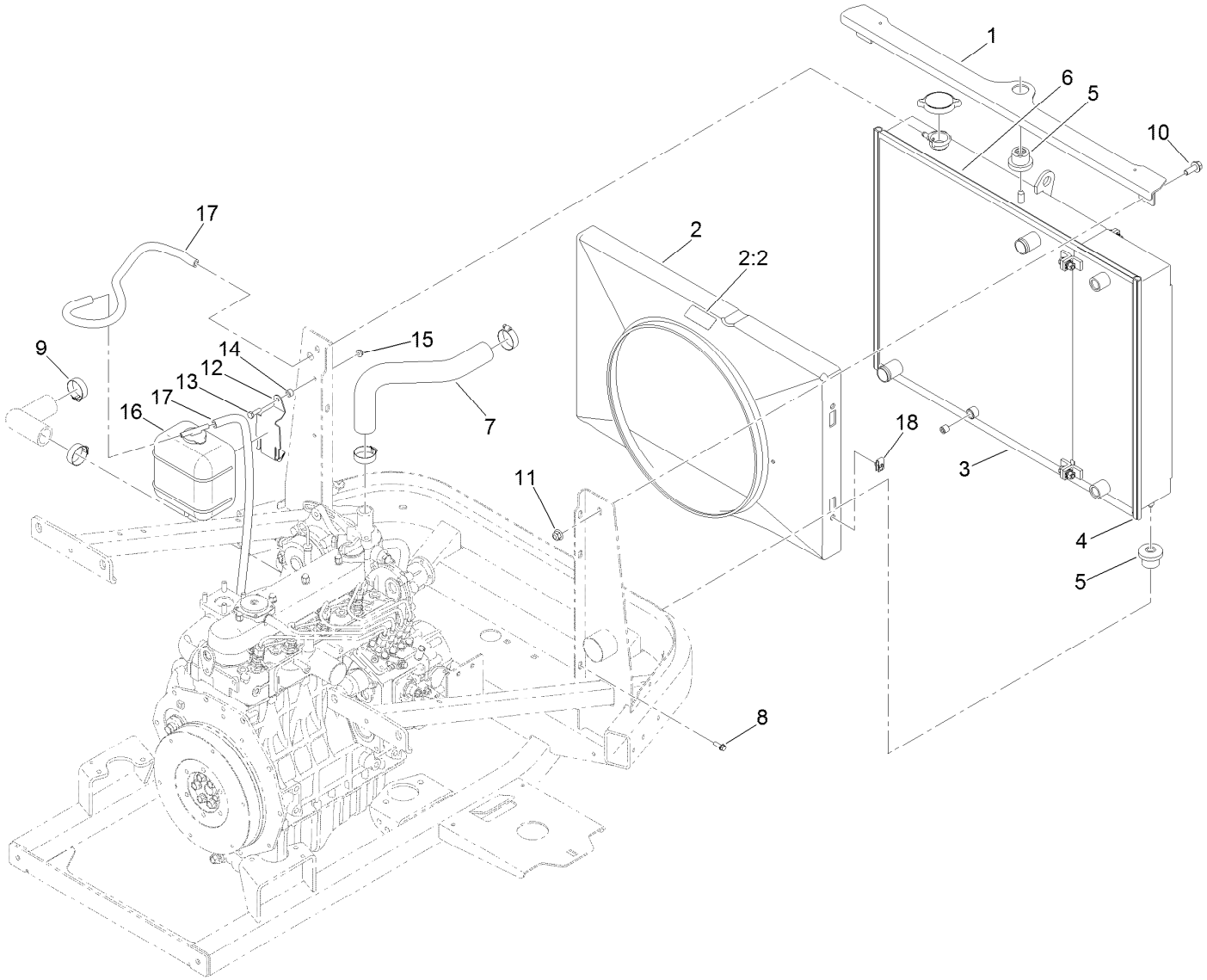

Radiator Component Assembly

Ref.	Part Number	Qty.	Description
1	133-4736-03	1	Support-Radiator
2	117-3268	1	Shroud Fan ASM
2:2	117-4766	1	Decal-Warning, Fan
3		1	Radiator And Cooler ASM ●
4	119-1426	2	Seal-Bulb
5	119-1422	3	Mount-Isolator
6	119-1427	2	Seal-Bulb
7	115-0330	1	Hose-Radiator, Upper
8	32105-15	4	Screw-HWH
9	2412-34	4	Clamp-Hose

Ref.	Part Number	Qty.	Description
10	3234-42	2	Screw-HHF
11	104-8301	2	Nut-Flange, NI
12	108-9930-03	1	Bracket-Bottle
13	321-5	2	Screw-HH
14	98-4799	2	Spacer
15	104-7201	2	Nut-Flange, NI
16	104-9318	1	Bottle-Overflow
17	108-3284	2	Hose-Fuel
18	107069	4	Clip

● Not serviced separately

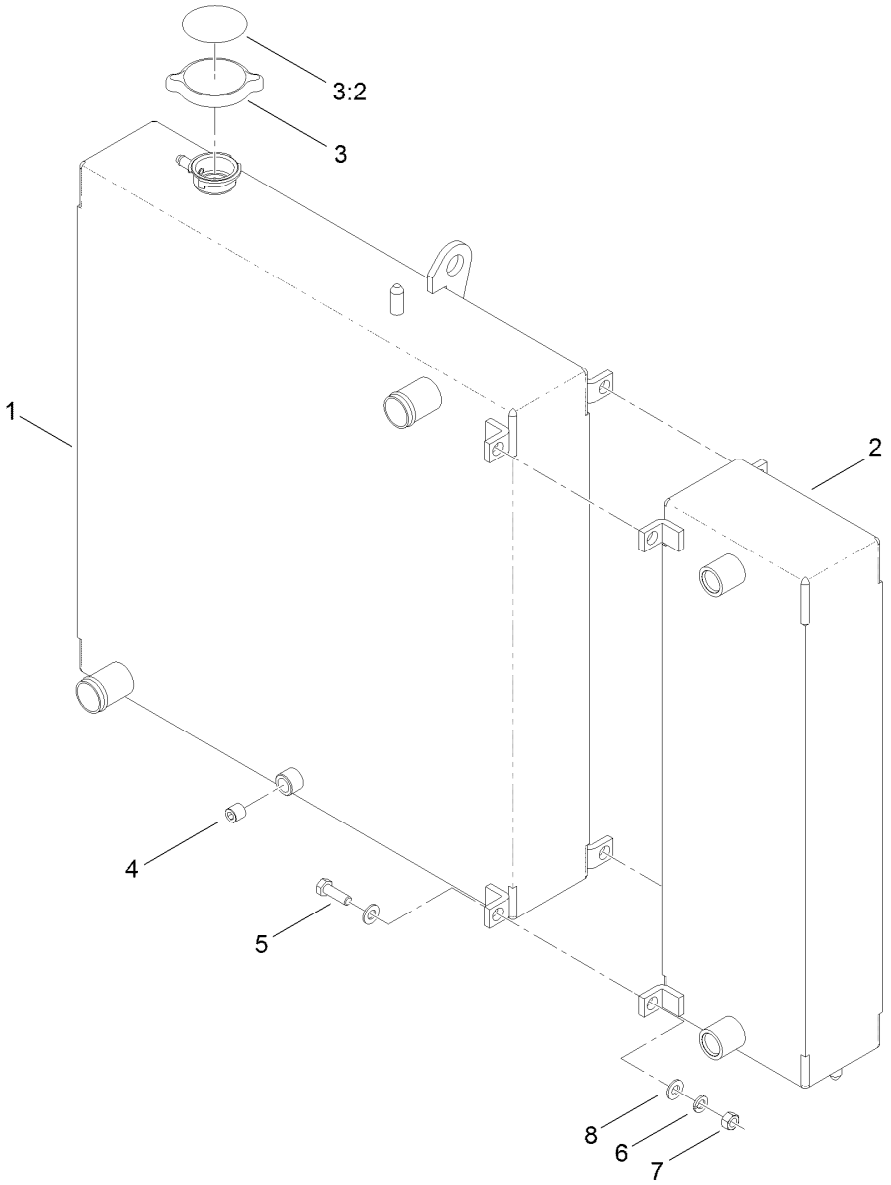

Radiator and Cooler Assembly

Ref.	*Part Number*	*Qty.*	*Description*
1	115-0050	1	Radiator
2	115-0051	1	Cooler
3	119-1430	1	Radiator Cap ASM
3:2	117-3276	1	Decal-Danger
4	99-8551	1	Plug-Pipe
5	322-5	4	Screw-HH
6	3253-4	4	Washer-Lock
7	3217-6	4	Nut-Hex
8	3256-23	8	Washer-Flat

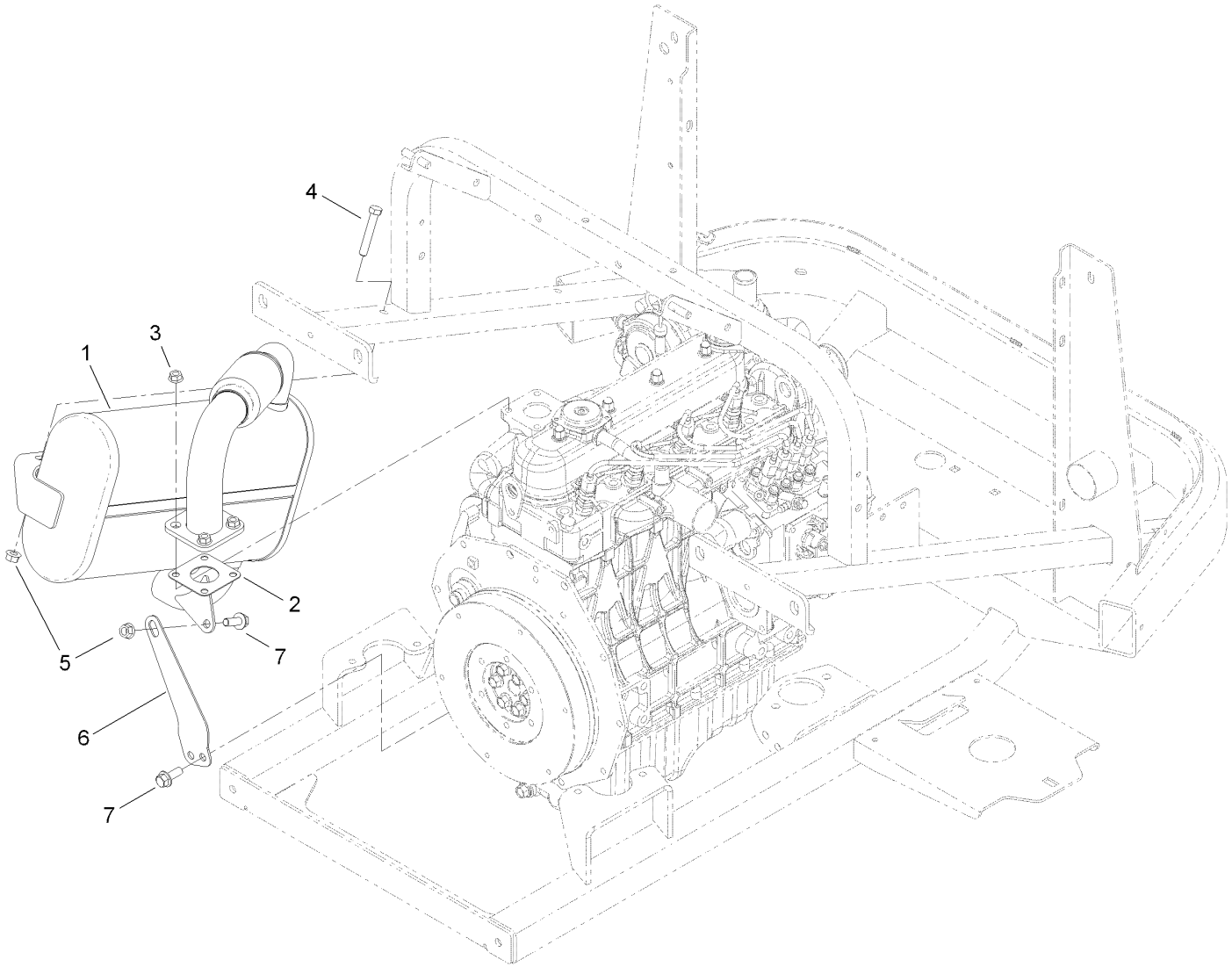

Muffler Assembly

Ref.	*Part Number*	*Qty.*	*Description*
1	115-0419	1	Muffler
2	98-9611	1	Gasket
3	33004-00	4	Nut-HF
4	323-11	2	Screw-HH
5	32128-21	5	Nut-HF
6	117-3033-03	1	Support-Muffler
7	3234-42	3	Screw-HHF

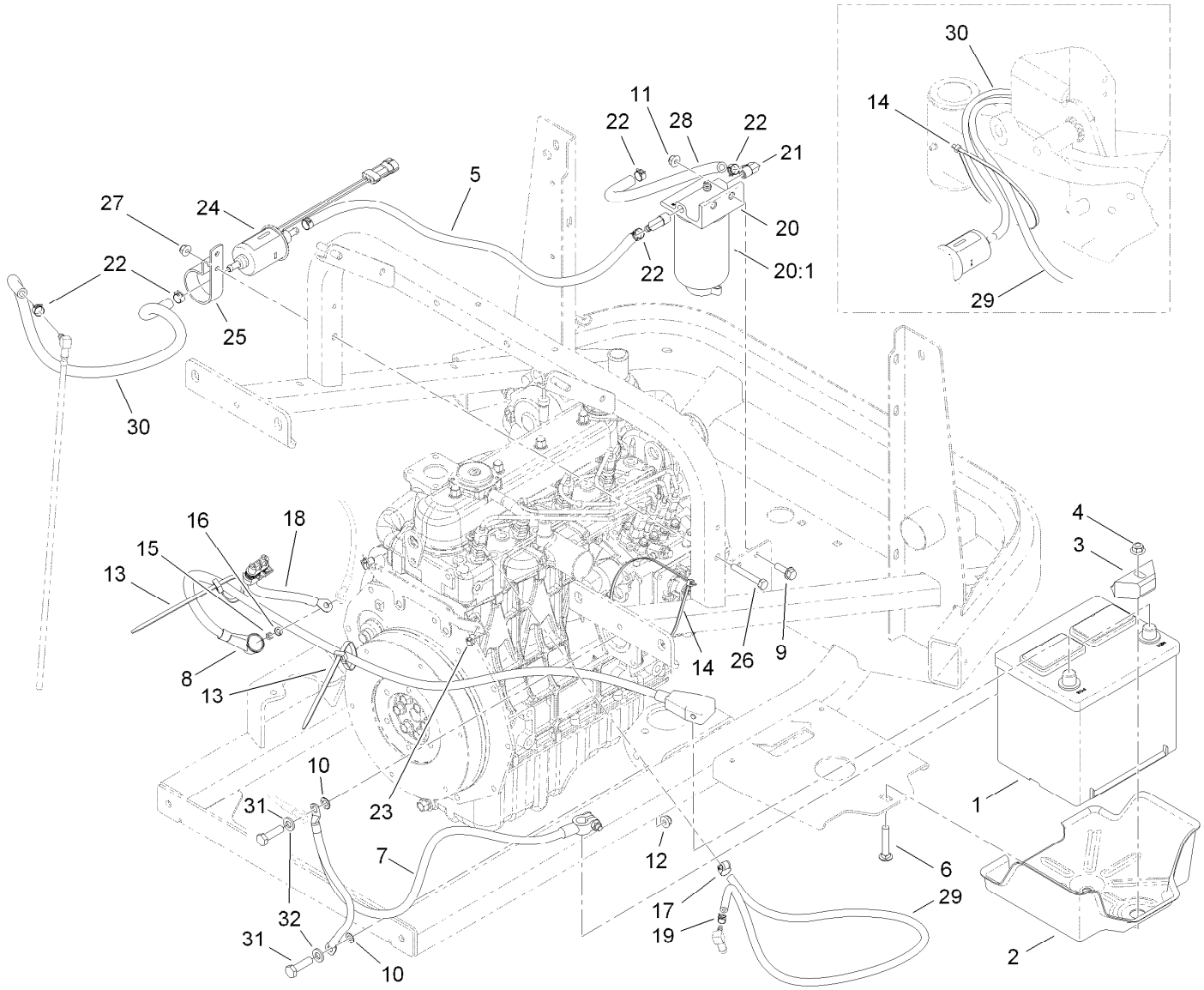

Battery and Fuel Delivery Assembly

Ref.	Part Number	Qty.	Description
1	106-5187	1	Battery-Dry
2	117-3027	1	Tray-Battery
3	66-2490	1	Retainer-Battery
4	104-8301	1	Nut-Flange, NI
5	109-0274	1	Hose-Fuel
6	3231-6	1	Screw-CARR
7	105-0040	1	Cable-Battery, Negative
8	104-0086	1	Cable-Battery, Positive
9	3234-17	2	Screw-HHF
10	3255-8	2	Washer-Lock
11	104-8300	2	Nut-Flange, NI
12	32128-25	2	Nut-HF
13	3290-378	2	Tie-Cable
14	3290-379	1	Tie-Cable
15	33014-00	1	Nut-Hex
16	3253-4	1	Washer-Lock
17	2412-108	1	Clamp-Worm
18	99-3441	1	Harness-Wire, Fusible Link
19	2412-80	1	Clamp-Hose
20	110-9044	1	Separator-Filter
20:1	110-9049	1	Filter-Spin On
21	353-781	2	Fitting-Elbow
22	92-2379	6	Clamp-Hose
23	32180-030	2	Clip-Tie
24	110-8806	1	Pump-Fuel
25	110-8817	1	Bracket-Pump, Fuel
26	321-15	1	Screw-HH
27	104-7201	1	Nut-Flange, NI
28	110-4105	1	Hose-Fuel
29	110-3958	1	Hose-Fuel
30	110-3257	1	Hose-Fuel
31	322-6	2	Screw-HH
32	3256-23	2	Washer-Flat

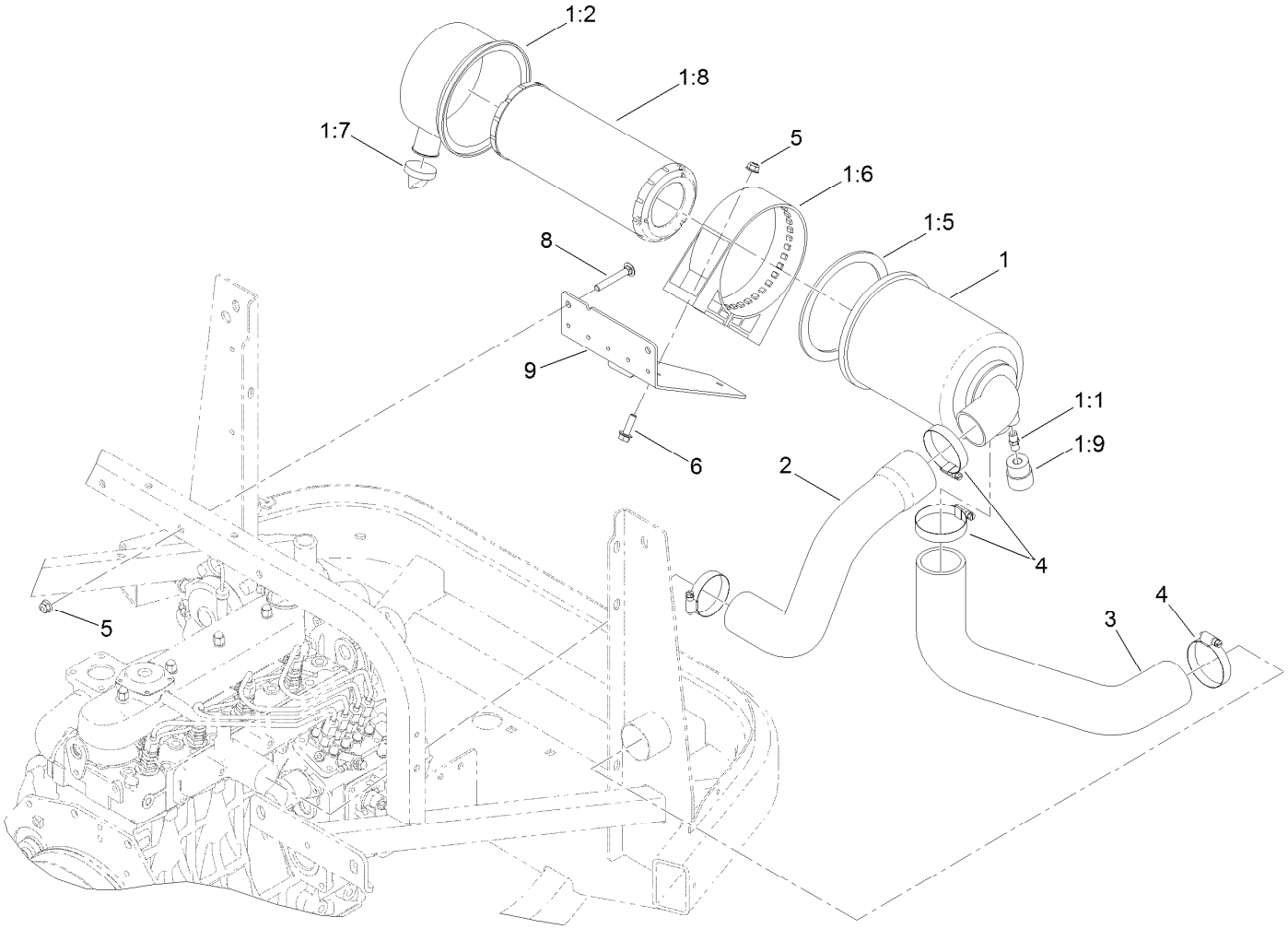

Air Cleaner Assembly

Ref.	Part Number	Qty.	Description
1	104-3428	1	Air Cleaner ASM
1:1	105-4292	1	Nipple-Pipe
1:2	104-0497	1	Cover
1:5	104-4897	1	Gasket
1:6	98-4525	1	Bracket-Cleaner, Air
1:7	104-0498	1	Valve-Vacuator
1:8	108-3810	1	Filter-Air
1:9	93-9164	1	Indicator-Mini
2	117-3020	1	Hose-Air Intake, Engine
3	117-3021	1	Hose-Inlet, Air
4	2412-130	4	Clamp-Hose
5	104-8300	4	Nut-Flange, NI
6	3234-17	2	Screw-HHF
8	3230-7	2	Bolt-CARR
9	131-3399-03	1	Plate-Cleaner, Air

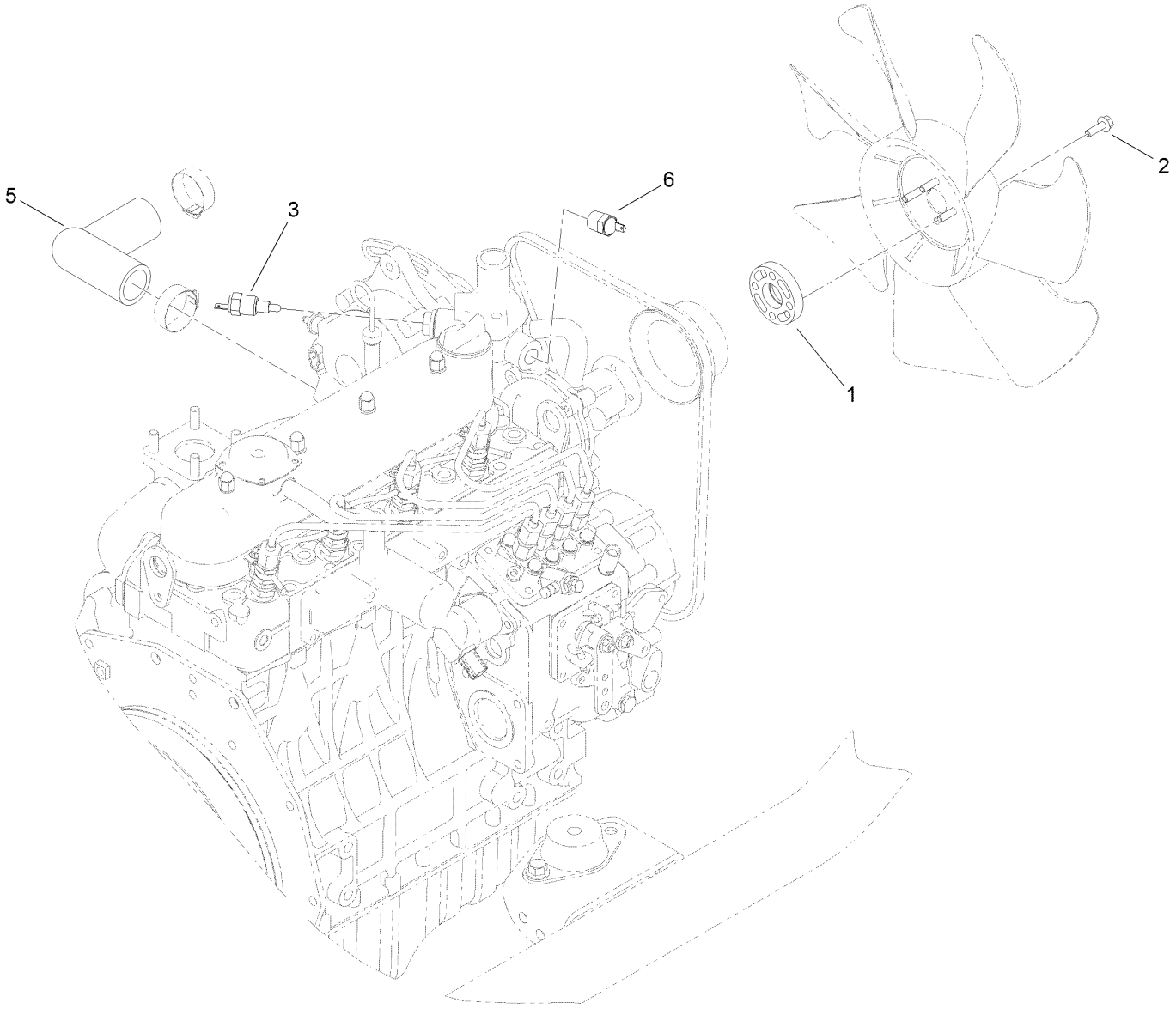

Fan Spacer and Thermoswitch Assembly

Ref.	*Part Number*	*Qty.*	*Description*
1	104-4247	1	Spacer-Fan
2	33103-020	4	Screw-HHF
3	98-9719	1	Thermoswitch
5	115-0331	1	Hose-Radiator, Lower
6	112-0183	1	Switch-Thermometer

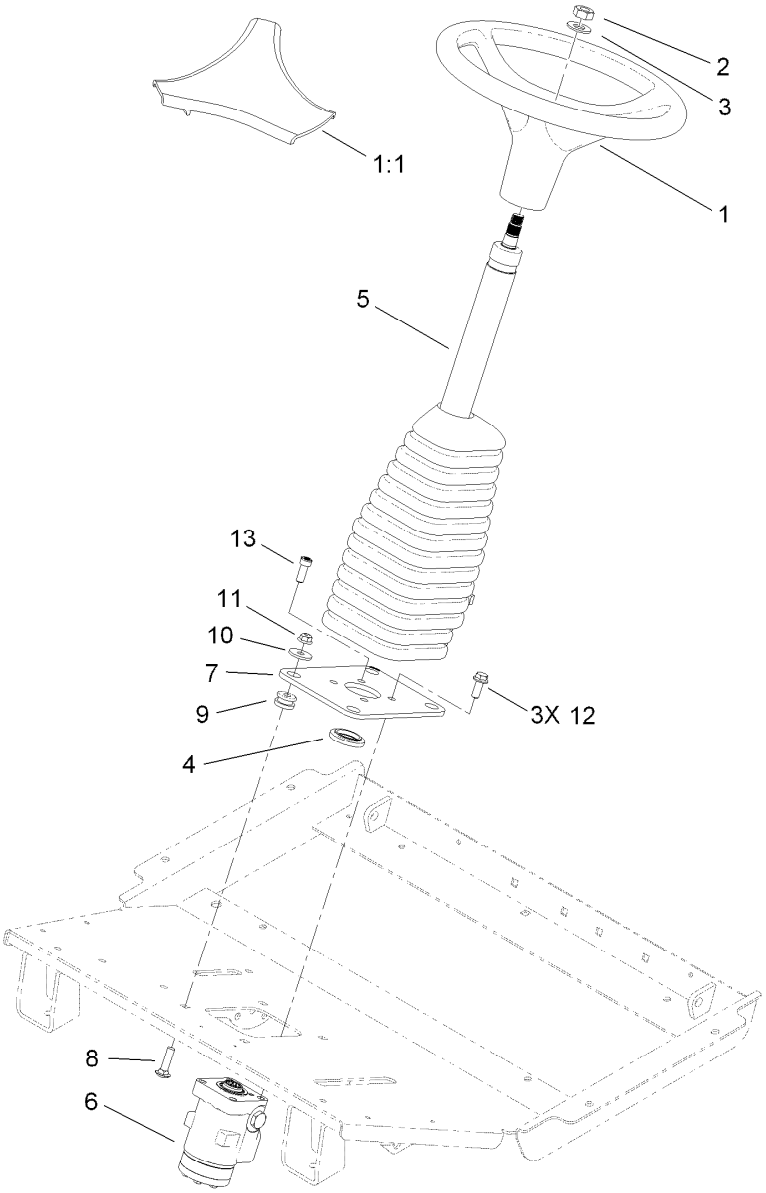

Steering Column Assembly

Ref.	Part Number	Qty.	Description
1	98-1471	1	Wheel-Steering
1:1	98-1468	1	Cover-Wheel, Steering
2	3296-33	1	Nut-Lock, NI
3	3256-27	1	Washer-Flat
4	117-3373	1	Bushing-Alignment
5	117-3371	1	Column-Steering
6	130-7948	1	Valve-Control, Steering
7	117-3234-03	1	Plate-Steering
8	3231-26	4	Screw-CARR
9	63-9750	4	Mount
10	63-8410	4	Washer
11	104-8301	4	Nut-Flange, NI
12	108-1531	3	Screw-HHF
13	3273-41	1	Screw-HSH

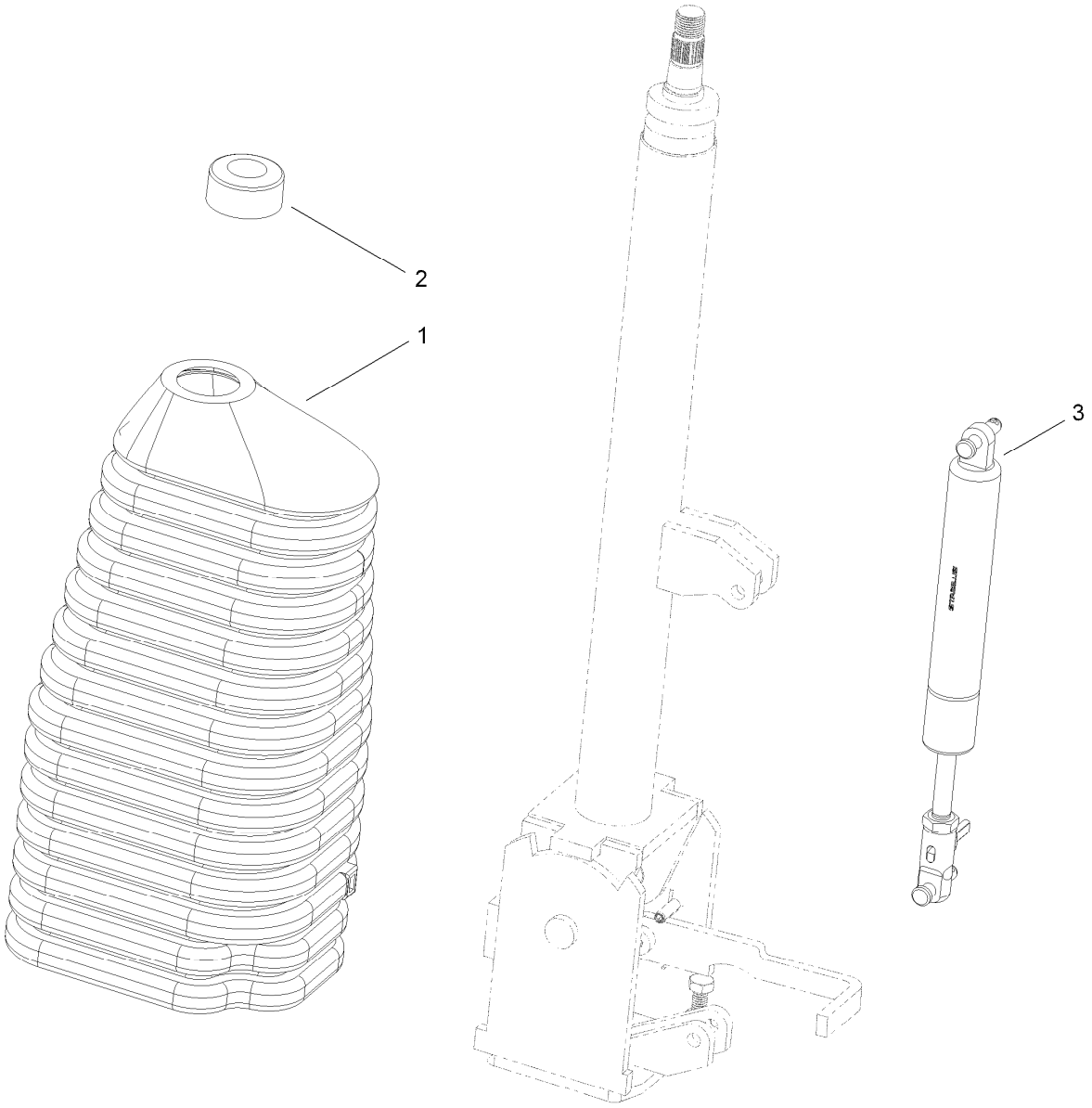

Steering Column Assembly No. 117-3371

Ref.	*Part Number*	*Qty.*	*Description*
1	120-2592	1	Boot-Rubber, Column
2	120-2593	1	Boot-Rubber, Bearing
3	120-2594	1	Gas Spring ASM

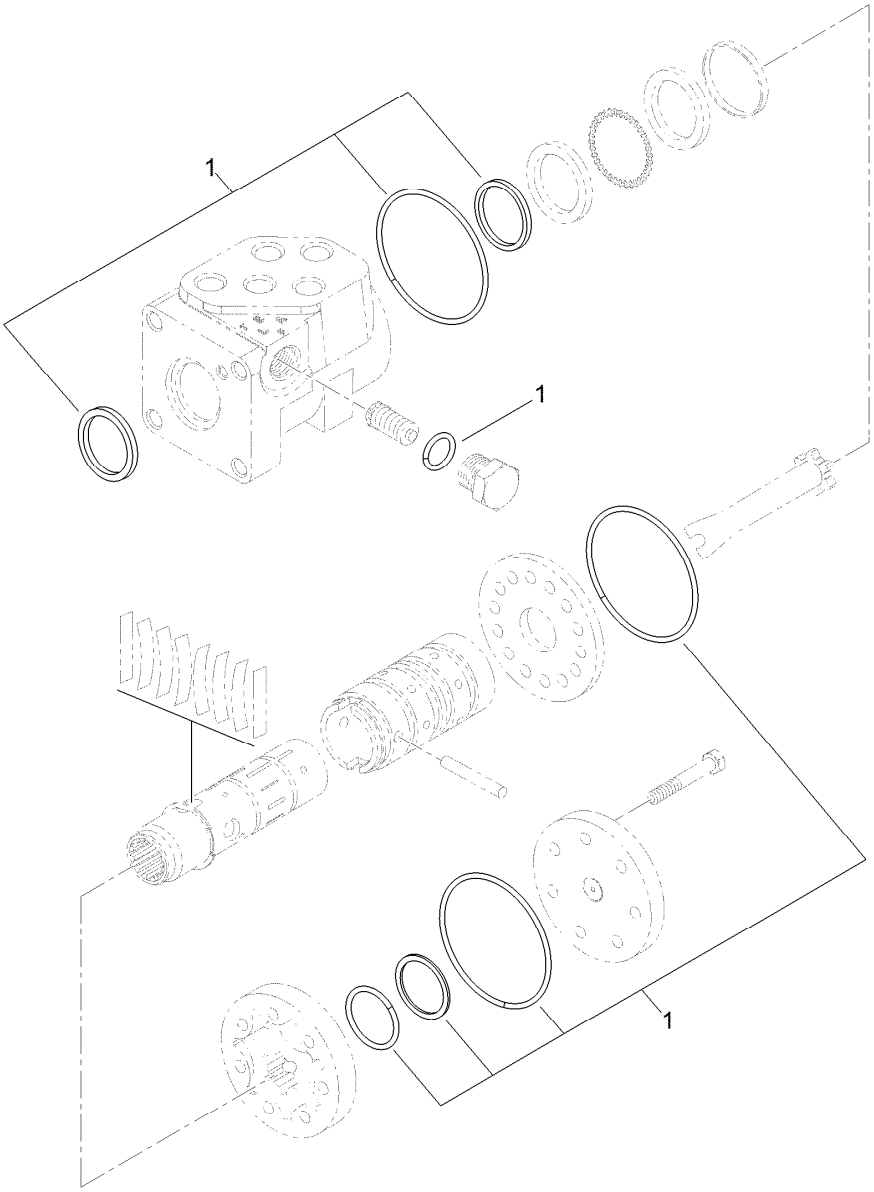

Steering Valve Assembly No. 130-7948

Ref.	*Part Number*	*Qty.*	*Description*
1	130-8357	1	Seal Kit

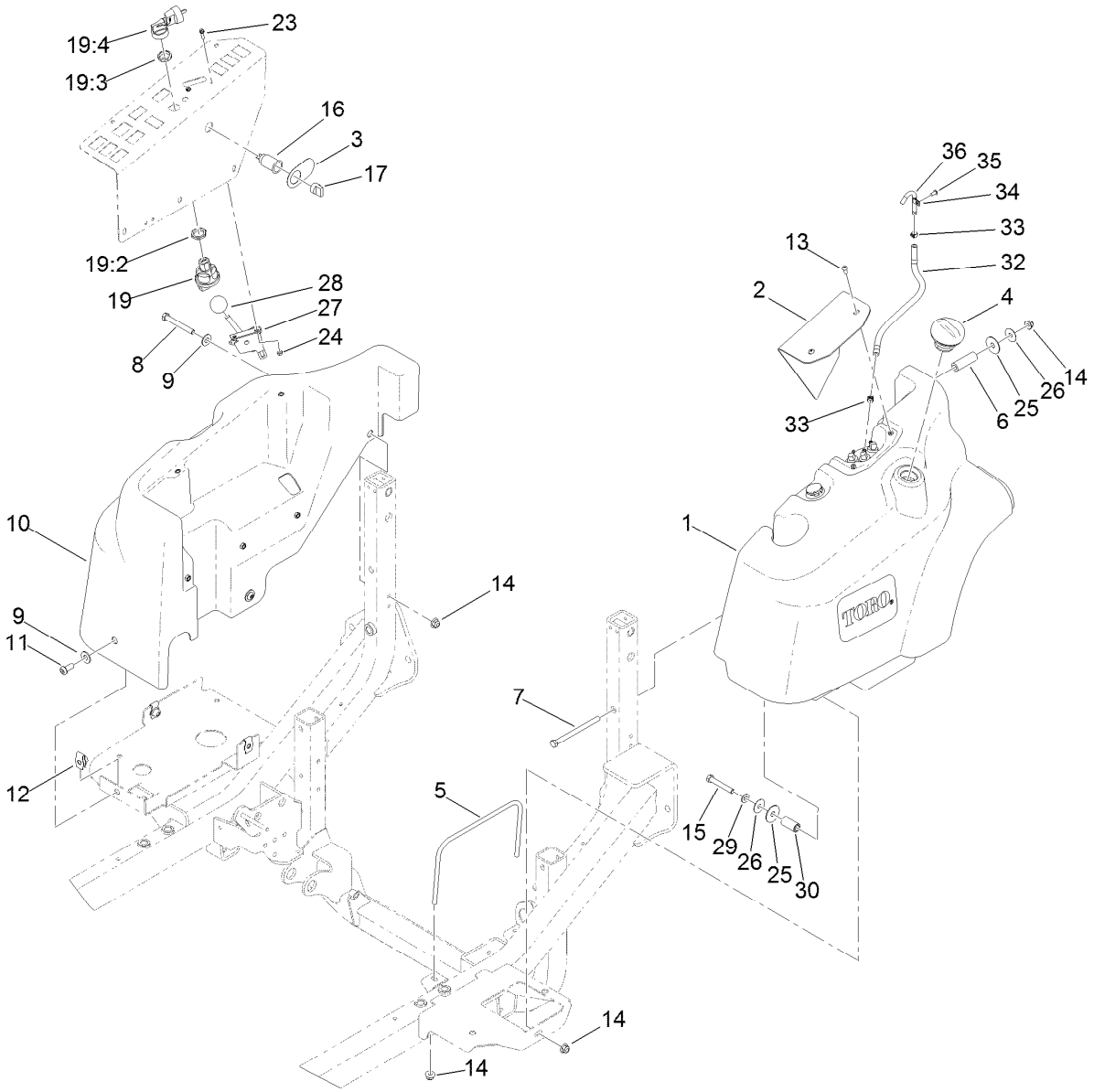

Fuel Tank and Control Panel Component Assembly

Ref.	Part Number	Qty.	Description
1	120-0255	1	Fuel Tank ASM
2	117-3359-03	1	Plate-Cover
3	106-2353	1	Decal-Powerpoint
4	115-5305	1	Cap-Fuel
5	117-3394	1	Bracket-Tank
6	117-3387	1	Tube-Spacer
7	323-39	1	Screw-HH
8	323-14	1	Screw-HH
9	100-7403	4	Washer-Flat
10	117-3353	1	Cover-Tank, HYD
11	3274-94	3	Screw-HSBH
12	105-4886	3	Nut-Tinnerman
13	3274-31	2	Screw-HSBH
14	104-8301	5	Nut-Flange, NI
15	323-12	1	Screw-HH
16	99-7411	1	Point-Power
17	99-7416	1	Cap

Ref.	Part Number	Qty.	Description
19	121-5159	1	Ignition Switch ASM
19:2	121-5160	1	Nut-Hex
19:3	121-5161	1	Nut-Face
19:4	121-5162	1	Ignition Key Set
23	32105-13	2	Screw-HWH
24	3296-2	2	Nut-Lock, NI
25	95-1905	2	Washer-Rubber
26	105-6814	2	Washer-Plain
27	110-5547	1	Lever-Control
28	233-42	1	Knob
29	3256-24	1	Washer-Flat
30	110-3726	1	Spacer
32	110-4101	1	Hose-Fuel
33	92-2379	2	Clamp-Hose
34	2412-89	1	Clamp-R
35	3290-412	1	Rivet
36	120-6820	1	Tube-Vent

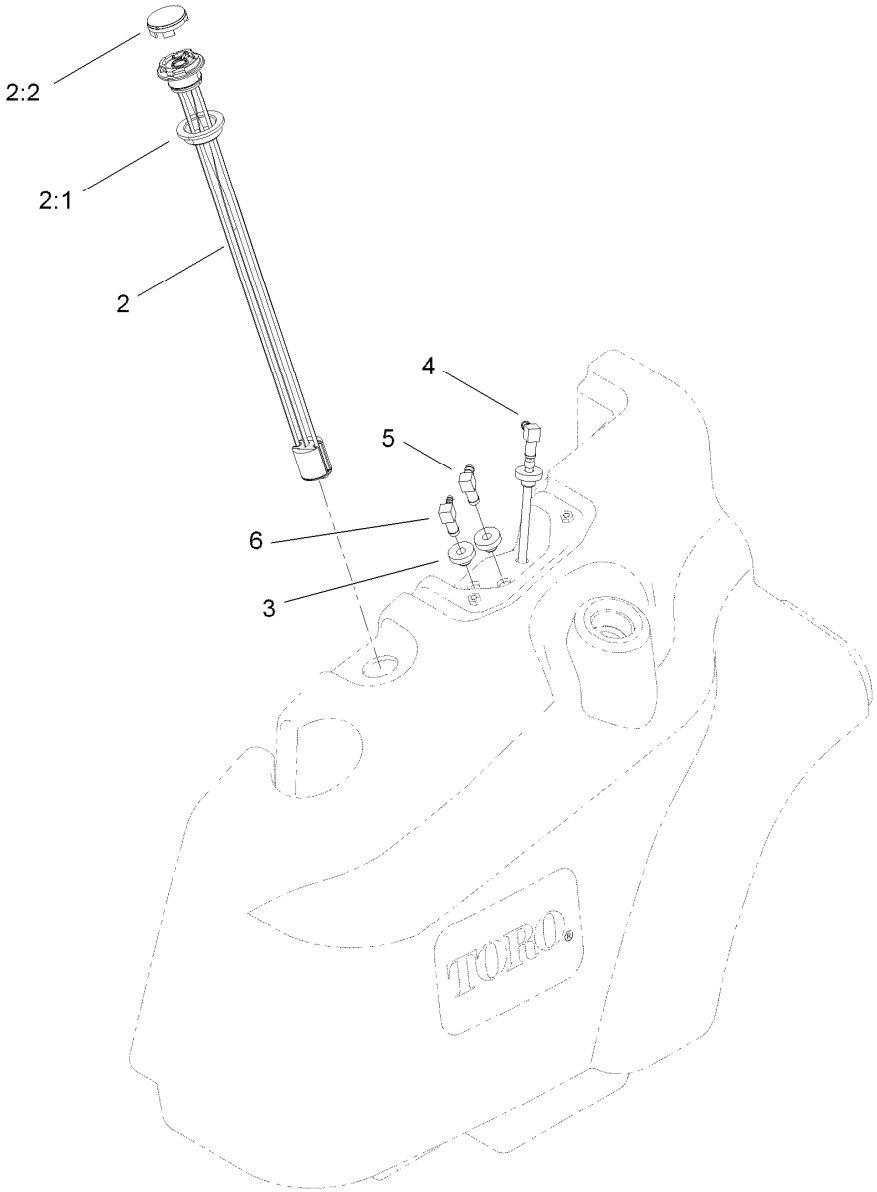

Fuel Tank Assembly No. 120-0255

Ref.	Part Number	Qty.	Description
2	117-3238	1	Gauge-Fuel
2:1	119-0508	1	Seal
2:2	117-8404	1	Dial-Gauge
3	46-6560	3	Bushing
4	117-3370	1	Pipe-Stand
5	46-6550	1	Fitting-Elbow, 90 DEG
6	104-5228	1	Fitting-Elbow, 90 DEG

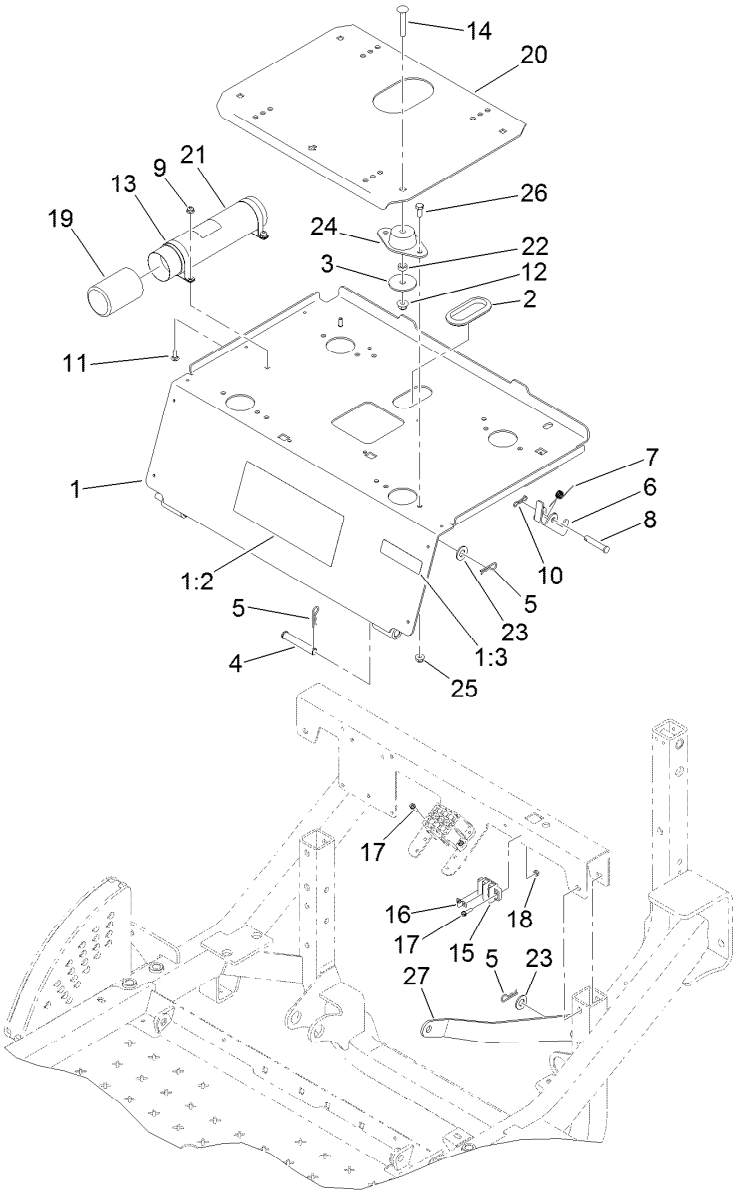

Seat Plate Assembly

Ref.	Part Number	Qty.	Description
1	120-0244	1	Seat Plate ASM
1:2	117-3273	1	Decal-Operation, Warning
1:3	117-2718	1	Decal-Arrester, Spark
2	237-164	1	Grommet
3	83-1040	4	Washer-Flat
4	283-55	2	Pin-Clevis
5	3290-467	4	Pin-Hair
6	117-3067	1	Latch-Seat
7	104-4821	1	Spring-Torsion
8	283-82	1	Pin-Clevis
9	104-7201	2	Nut-Flange, NI
10	119-1415	1	Pin-Cotter, Locking
11	3229-1	2	Bolt-CARR
12	104-8301	4	Nut-Flange, NI
13	107-1865	2	R-Clamp

Ref.	Part Number	Qty.	Description
14	3231-40	4	Bolt-CARR, Short Neck
15	42862	1	Block-Terminal, Ground
16	42863	1	Strip-Jumper
17	32105-13	4	Screw-HWH
18	3296-2	4	Nut-Lock, NI
19	104-7048	1	Cap-Housing
20	117-3065-03	1	Plate-Seat
21	104-7050	1	Tube-Manual
22	83-1050	4	Spacer
23	3256-26	2	Washer-Flat
24	121-9076	4	Mount-Engine
25	104-8300	8	Nut-Flange, NI
26	322-3	8	Screw-HH
27	120-0242-01	1	Strap-Prop

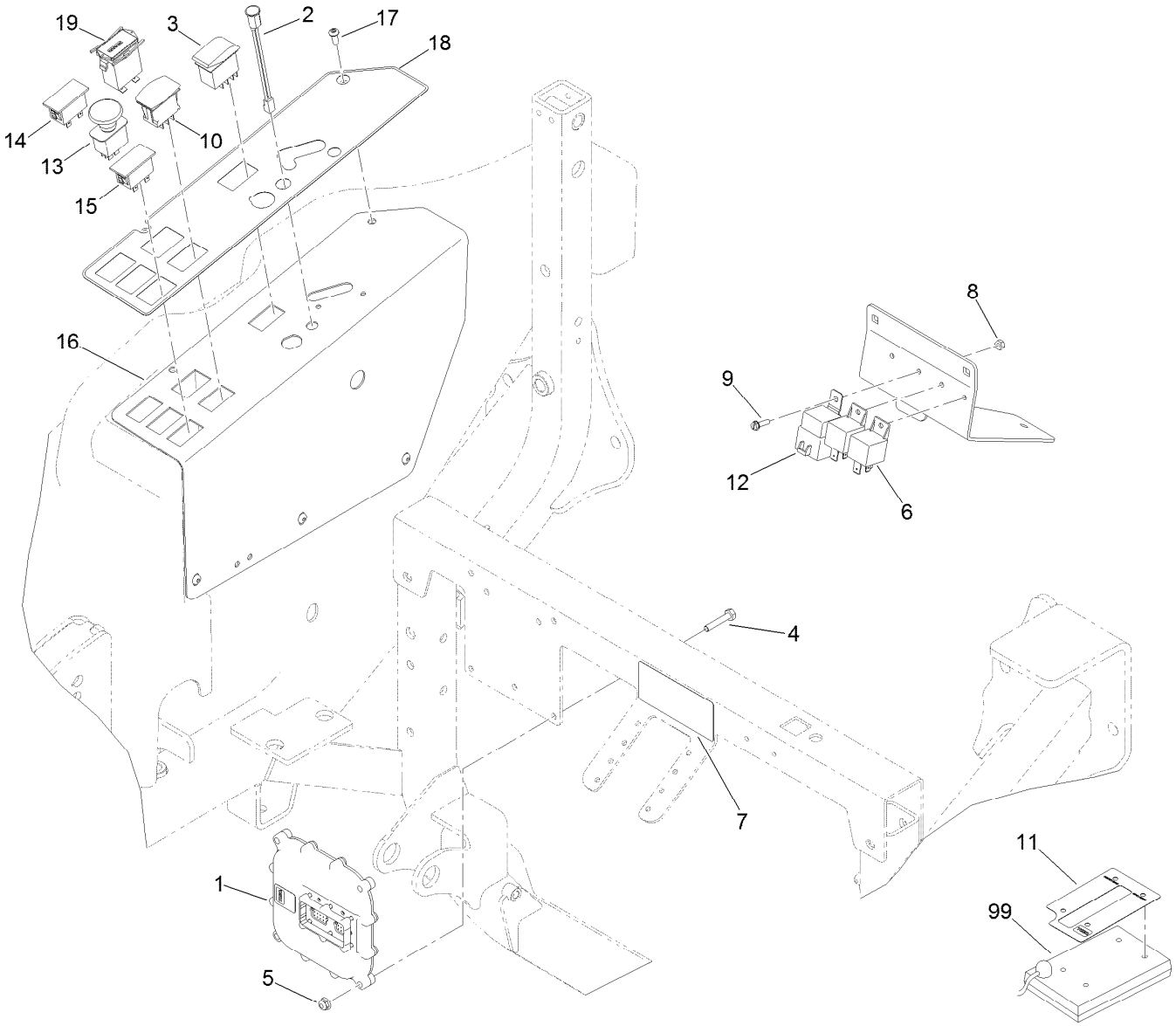

Module Control and Relay Assembly

Ref.	Part Number	Qty.	Description
1	115-1900	1	Controller
2	95-7652	1	Light-Indicator
3	100-8490	1	Switch-Rocker
4	321-13	4	Screw-HH
5	104-7201	4	Nut-Flange, NI
6	99-7435	2	Relay-Power
7	117-3233	1	Decal-Fuseblock
8	3296-2	3	Nut-Lock, NI
9	32105-13	3	Screw-HWH
10	100-1535	1	Switch

Ref.	Part Number	Qty.	Description
11	120-0273	1	Decal-Diagnostic, Master
12	99-7430	1	Relay
13	95-4108	1	Switch-PTO,On-On-None
14	100-8070	1	Lamp-Warning
15	100-8071	1	Lamp-Warning
16	121-5352-03	1	Panel-Control, Tank
17	3274-31	5	Screw-HSBH
18	117-3277	1	Decal-Control Panel, 4Wd
19	1-513374	1	Meter-Hour
99	85-4750	1	Box-Display, Diagnostic

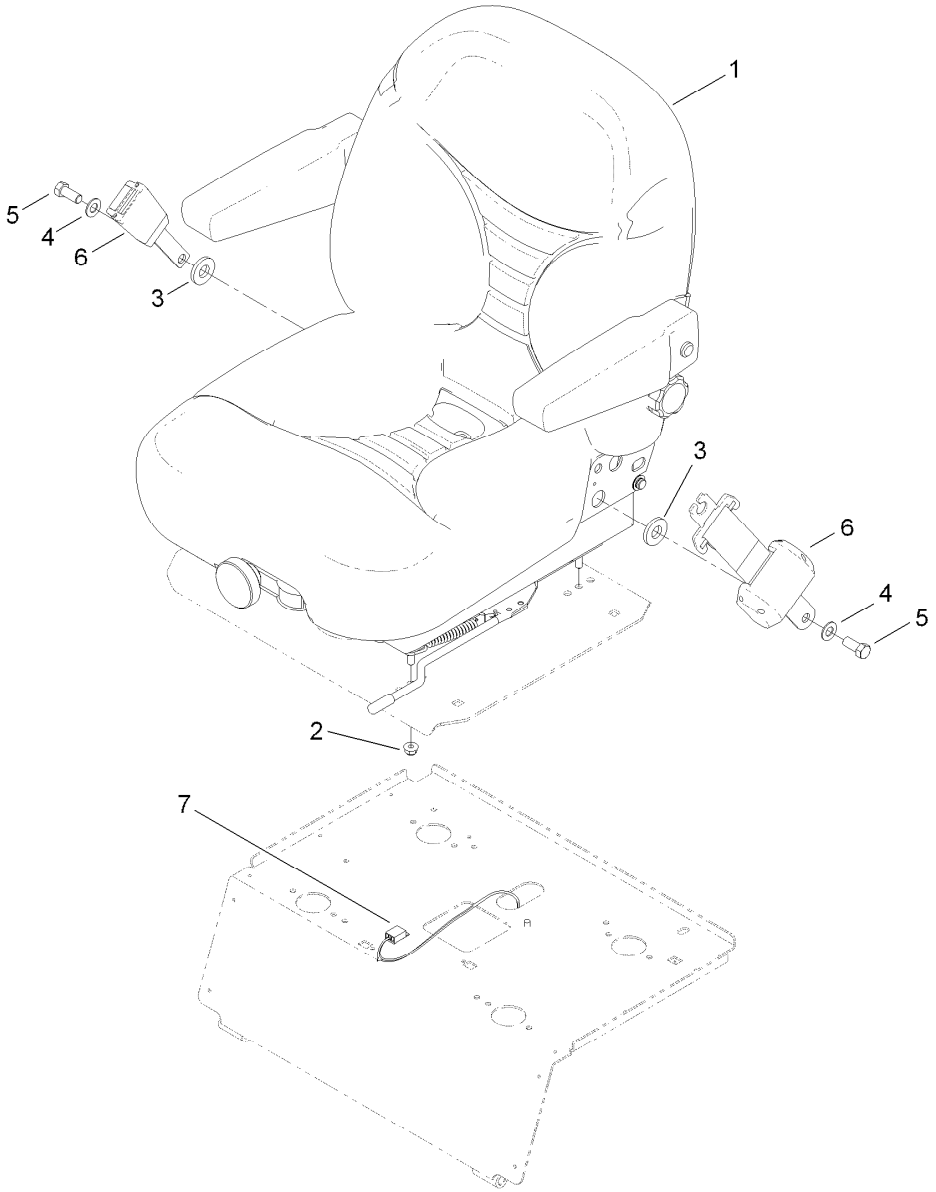

Seat Assembly

Ref.	Part Number	Qty.	Description
1	107-2286	1	Seat
2	104-8300	4	Nut-Flange, NI
3	99-7667	2	Washer-Flat
4	3256-25	2	Washer-Flat
5	3212-4	2	Screw-HH
6	110-0413	1	Seatbelt-Retractable
7	119-5786	1	Harness-Wire

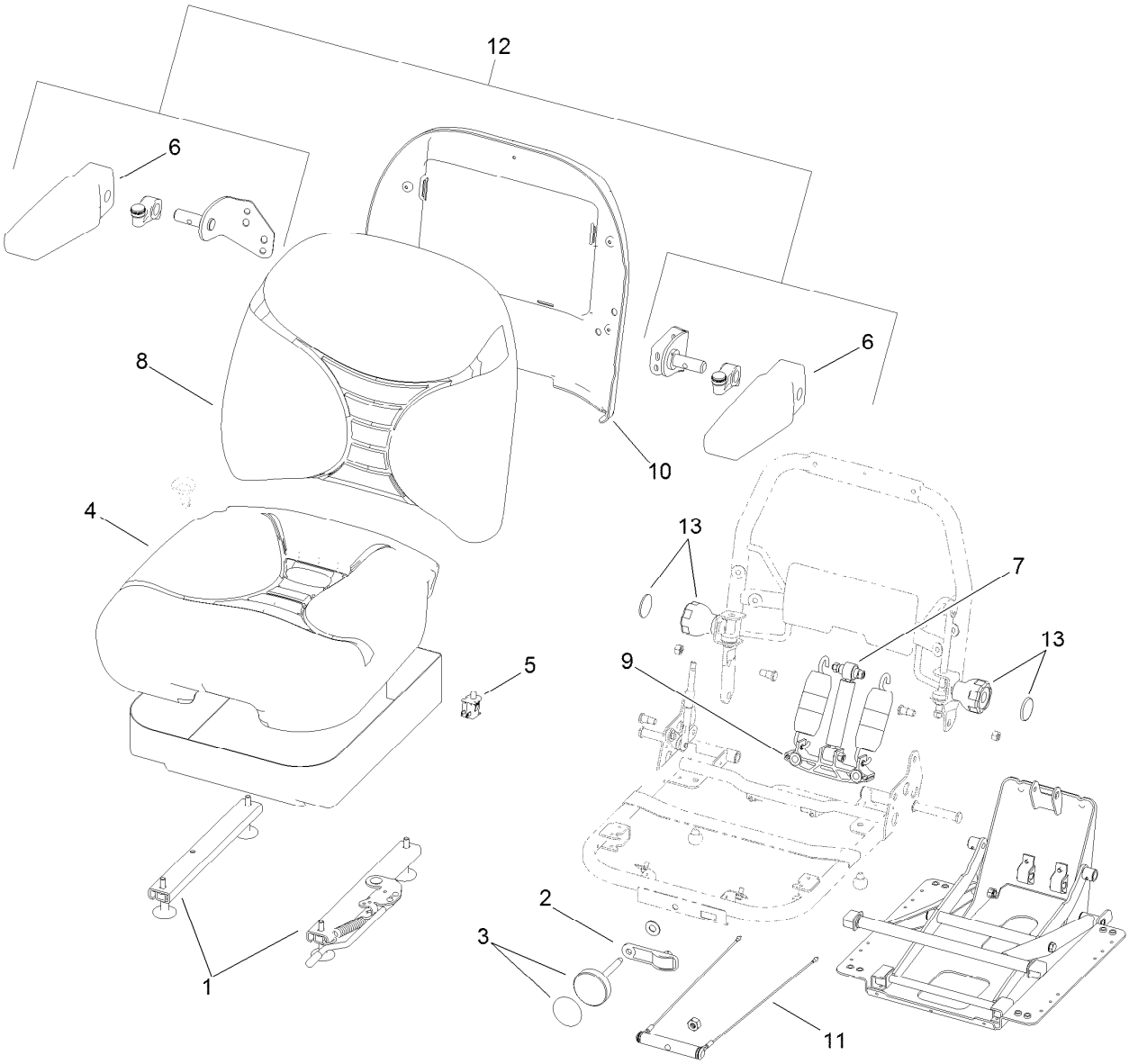

Seat Assembly No. 107-2286

Ref.	Part Number	Qty.	Description
1	107-1880	1	Seat Track Kit
2	107-1885	1	Weight Indicator Kit
3	121-9431	1	Knob Kit
4	107-1883	1	Bottom Cushion Kit
5	82-2190	1	Switch-Bail
6	107-1887	2	Pad-Armrest
7	107-1884	1	Shock Absorber Kit
8	107-1882	1	Back Cushion Kit
9	109-3343	1	Spring And Saddle Kit
10	109-3344	1	Back Panel Kit
11	109-3345	1	Weight Adjust Kit
12	121-9415	1	Armrest Kit
13	121-9432	2	Adjust Knob Kit

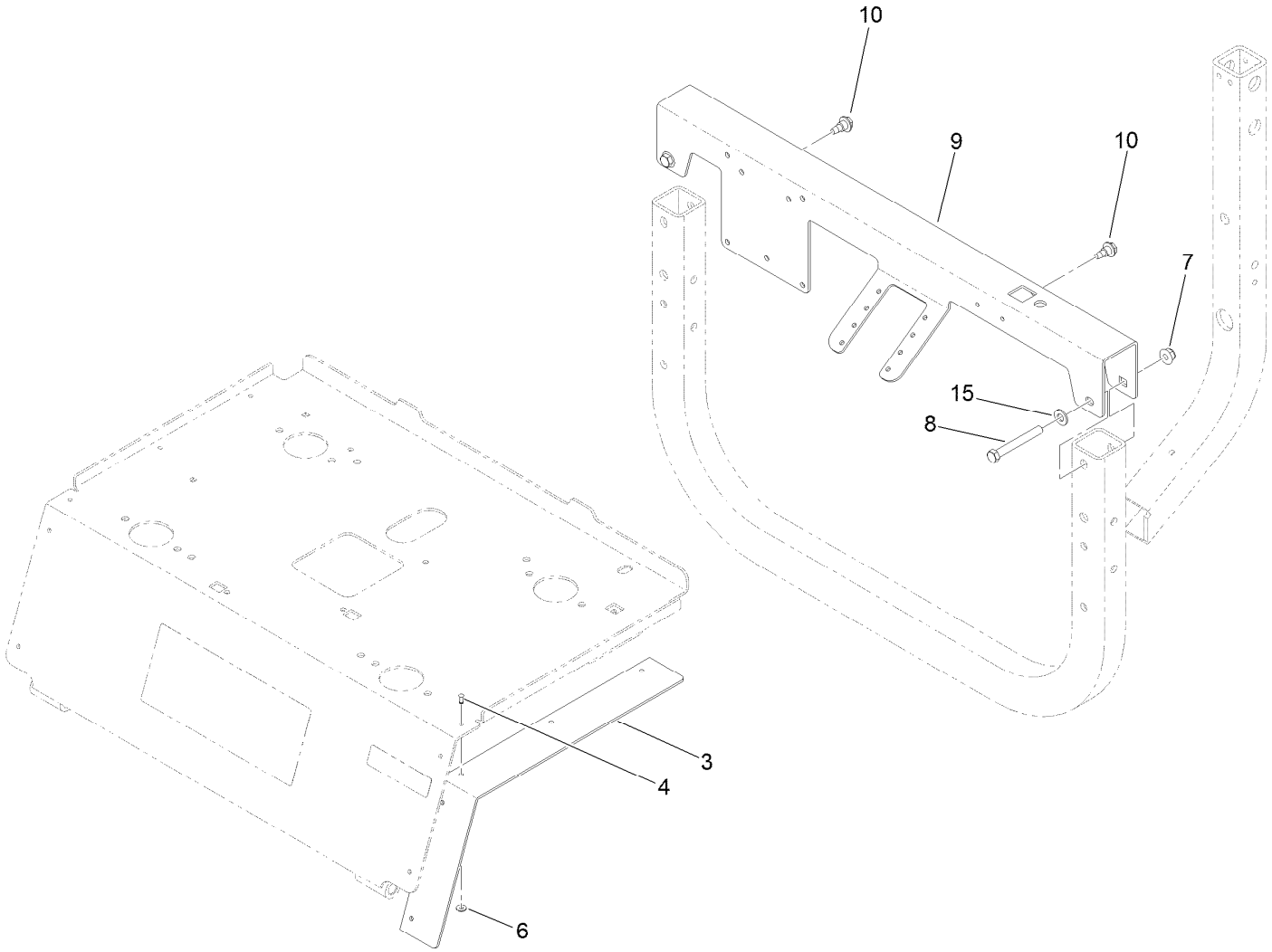

Seat Platform Assembly

Ref.	Part Number	Qty.	Description
3	117-3175	2	Strap-Filler
4	3290-282	10	Rivet-Blind
6	3269-26	10	Washer-Plain
7	104-8301	2	Nut-Flange, NI
8	323-14	2	Screw-HH
9	117-3064-03	1	Channel-Seat
10	99-5105	2	Bolt-Shoulder
15	3256-24	2	Washer-Flat

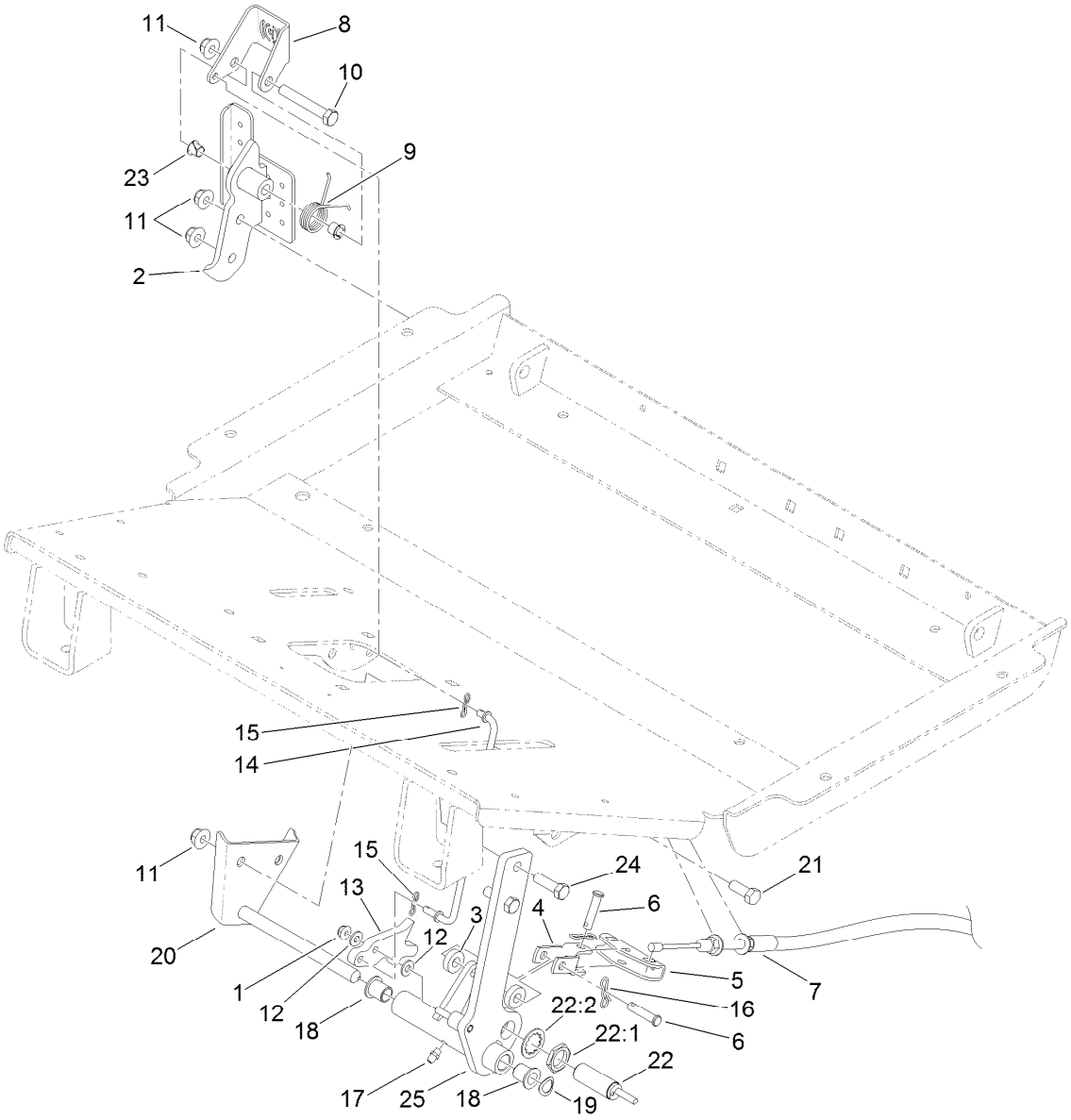

Brake Pedal Assembly

Ref.	Part Number	Qty.	Description
1	104-7201	1	Nut-Flange, NI
2	119-1403-03	1	Pedal-Brake
3	26-4840	2	Spacer-Pin, Mounting
4	115-8060	1	Clevis-Double
5	115-8059	1	Yoke-Cable
6	283-14	2	Pin-Clevis
7	117-3214	2	Cable-Brake
8	119-1407	1	Pedal-Park
9	99-7140	1	Spring-Torsion
10	323-12	1	Screw-HH
11	104-8301	5	Nut-Flange, NI
12	3256-22	2	Washer-Flat
13	119-1406	1	Detent-Brake
14	119-1405	1	Rod-Brake Pawl

Ref.	Part Number	Qty.	Description
15	119-1414	2	Pin-Cotter, Locking
16	119-1415	2	Pin-Cotter, Locking
17	302-5	1	Fitting-Grease
18	125-8775	2	Bushing-Flange
19	3290-221	1	Washer-Spring
20	119-1388	1	Pin-Brake
21	323-6	2	Screw-HH
22	115-5300	1	Proximity Switch ASM
22:1	117-3207	2	Nut-Hex
22:2	117-3208	2	Washer-Lock, Internal Tooth
23	52-2891	2	Bushing-Flanged, Nylon
24	323-7	2	Screw-HH
25	119-1400-03	1	Lever-Brake

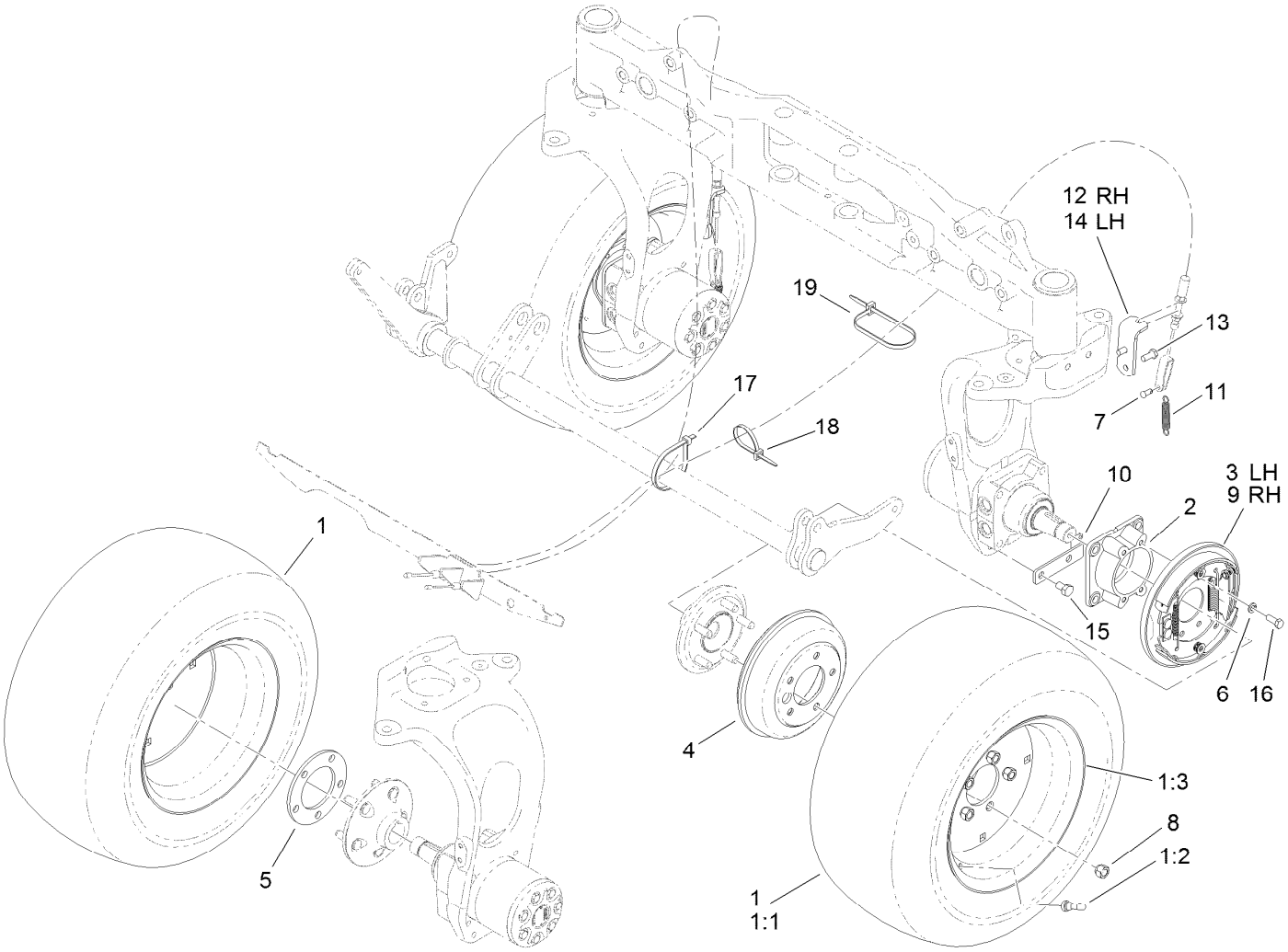

Wheel and Brake Assembly

Ref.	Part Number	Qty.	Description
1	117-2900	4	Tire And Wheel ASM
1:1	117-2901	1	Tire
1:2	232-27	1	Stem-Valve
1:3	117-2902	1	Rim
2	120-0248-03	2	Adapter-Brake
3	120-0235	1	LH Brake ASM
4	114-8864	2	Drum-Brake
5	115-0199-03	2	Spacer-Wheel
6	3253-21	8	Washer-Lock
7	283-62	2	Pin-Clevis
8	242-50	10	Nut-Lug

Ref.	Part Number	Qty.	Description
9	120-0233	1	RH Brake ASM
10	115-0132	2	Bracket-Spring, Return
11	87-4020	2	Spring-Extension
12	119-1352-03	1	Bracket-Brake Cable, RH
13	325-2	4	Screw-HH
14	119-1449-03	1	Bracket-Brake Cable, LH
15	323-5	4	Screw-HH
16	323-6	8	Screw-HH
17	3334-945	1	Tie-Cable
18	3290-378	1	Tie-Cable
19	250-5	1	Tie-Cable

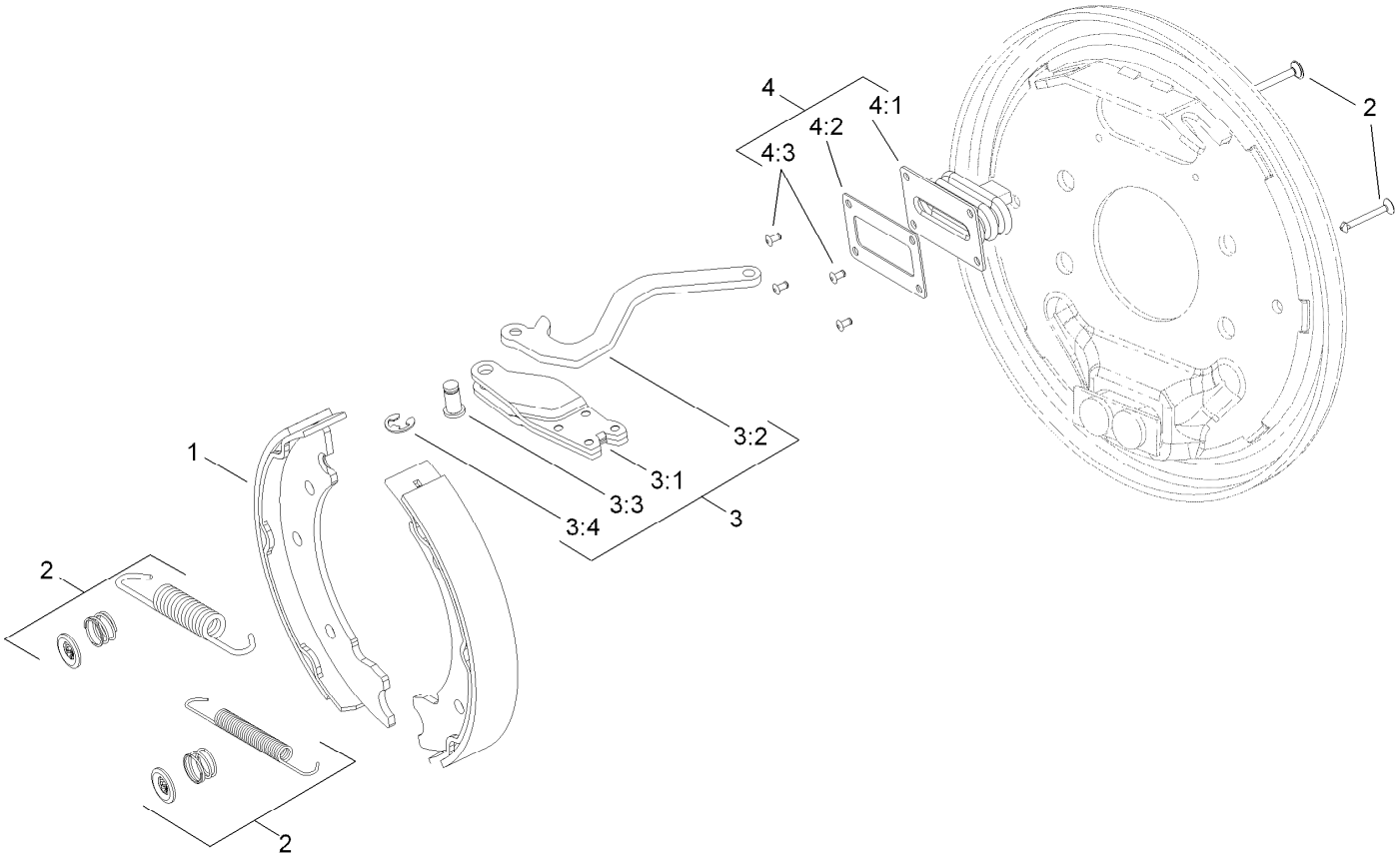

Left Hand Brake Assembly No. 120-0235

Ref.	*Part Number*	*Qty.*	*Description*
1	108-6981	1	Brake Shoe Kit
2	108-6983	1	Brake Hardware Kit
3	120-0236	1	LH Actuator Kit
3:1		1	Housing ●
3:2		1	Lever-LH ●
3:3		1	Pin-Pivot ●
3:4		1	E-Ring ●
4	110-8885	1	Dust Boot Kit
4:1		1	Boot ●
4:2		1	Plate-Back Up ●
4:3		2	Rivet ●

● Not serviced separately

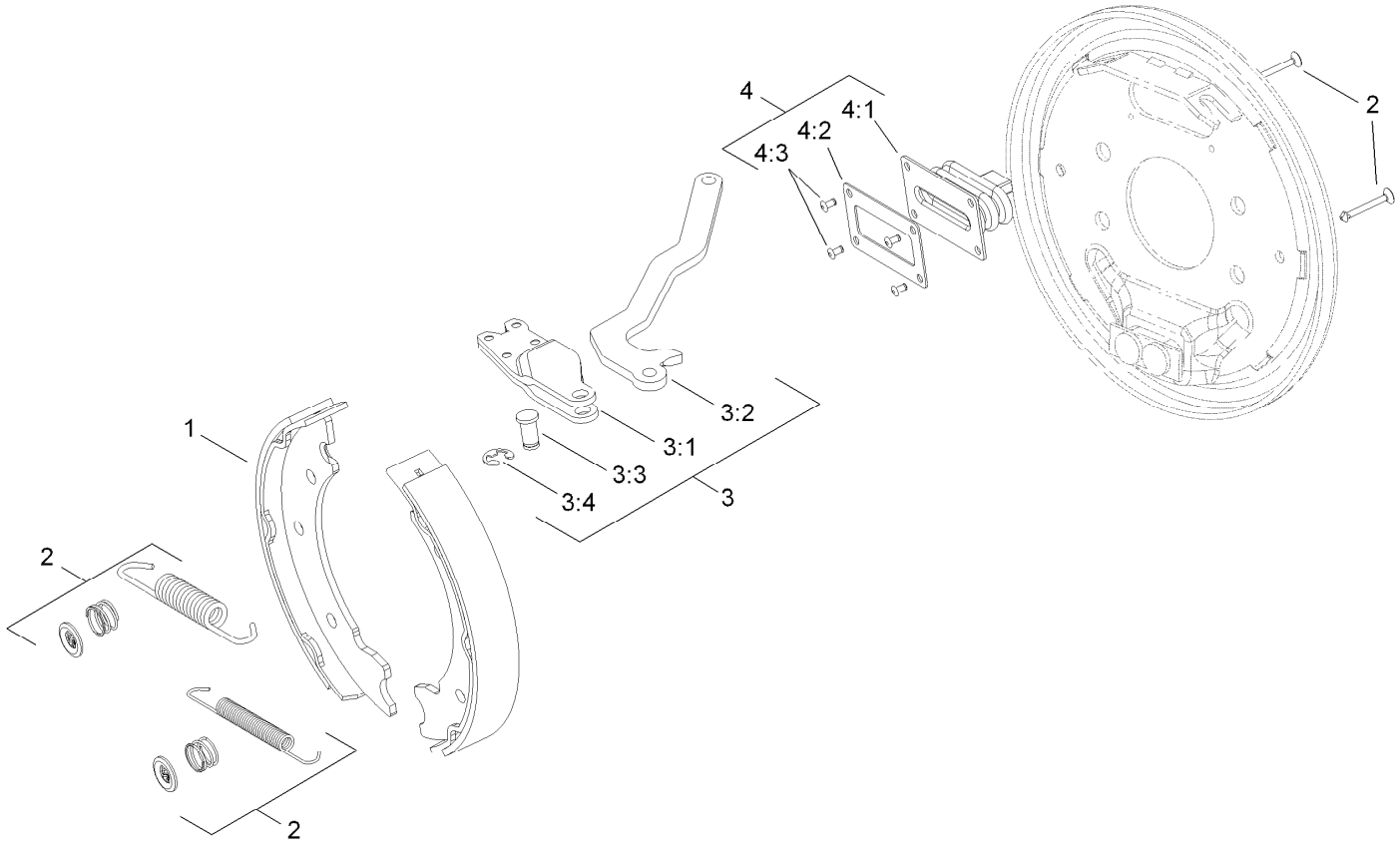

Right Hand Brake Assembly No. 120-0233

Ref.	*Part Number*	*Qty.*	*Description*
1	108-6981	1	Brake Shoe Kit
2	108-6983	1	Brake Hardware Kit
3	120-0234	1	RH Actuator Kit
3:1		1	Housing ●
3:2		1	Lever-RH ●
3:3		1	Pin-Pivot ●
3:4		1	E-Ring ●
4	110-8885	1	Dust Boot Kit
4:1		1	Boot ●
4:2		1	Plate-Back Up ●
4:3		2	Rivet ●

● Not serviced separately

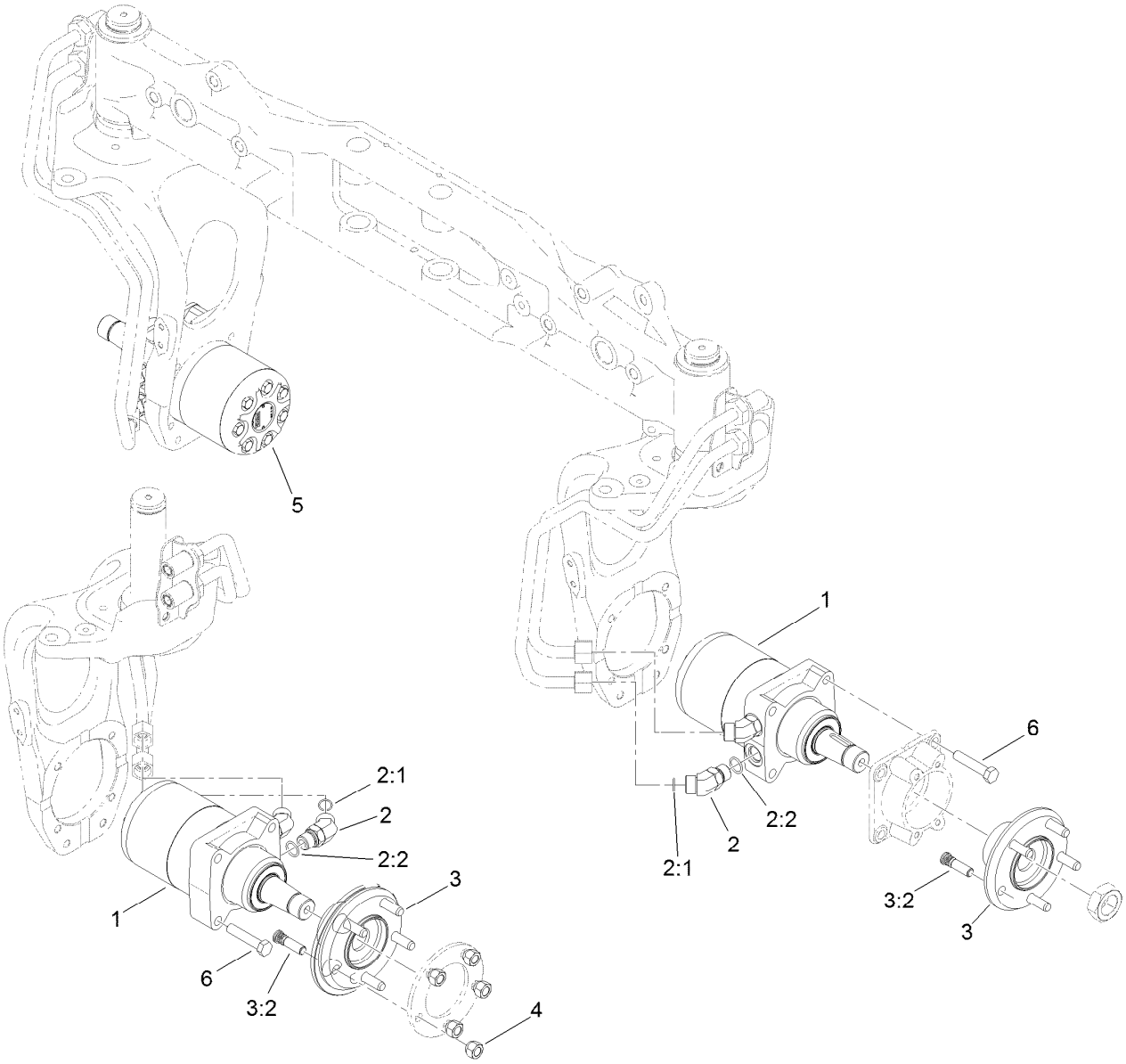

4 Wheel Drive Hydraulic Motor and Fitting Assembly

Ref.	*Part Number*	*Qty.*	*Description*
1	117-3284	2	HYD Motor ASM (280 CCW)
2	340-14	8	Fitting-HYD, 45 DEG
2:1	237-65	1	O-Ring
2:2	237-80	1	O-Ring
3	121-5492	4	Wheel Hub ASM
3:2	114-3918	5	Stud-Wheel
4	242-50	10	Nut-Lug
5	117-3285	2	HYD Motor ASM (280 CW)
6	325-34	16	Screw-HH

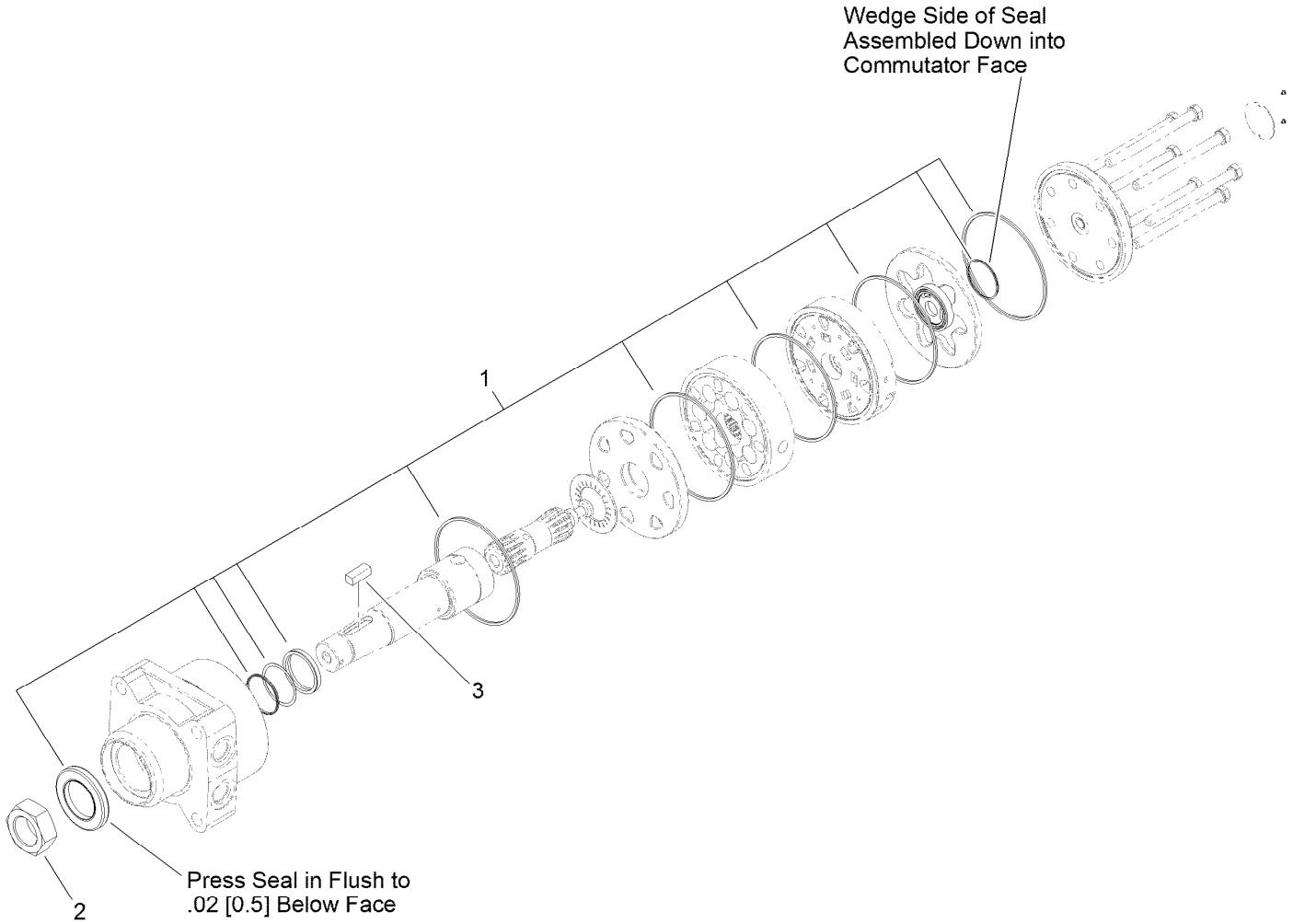

Hydraulic Motor Assembly No. 117-3284 (CCW)

Ref.	*Part Number*	*Qty.*	*Description*
1	107-9368	1	Seal Kit
2	117-3290	1	Nut-Hex
3	117-5198	1	Key-Square

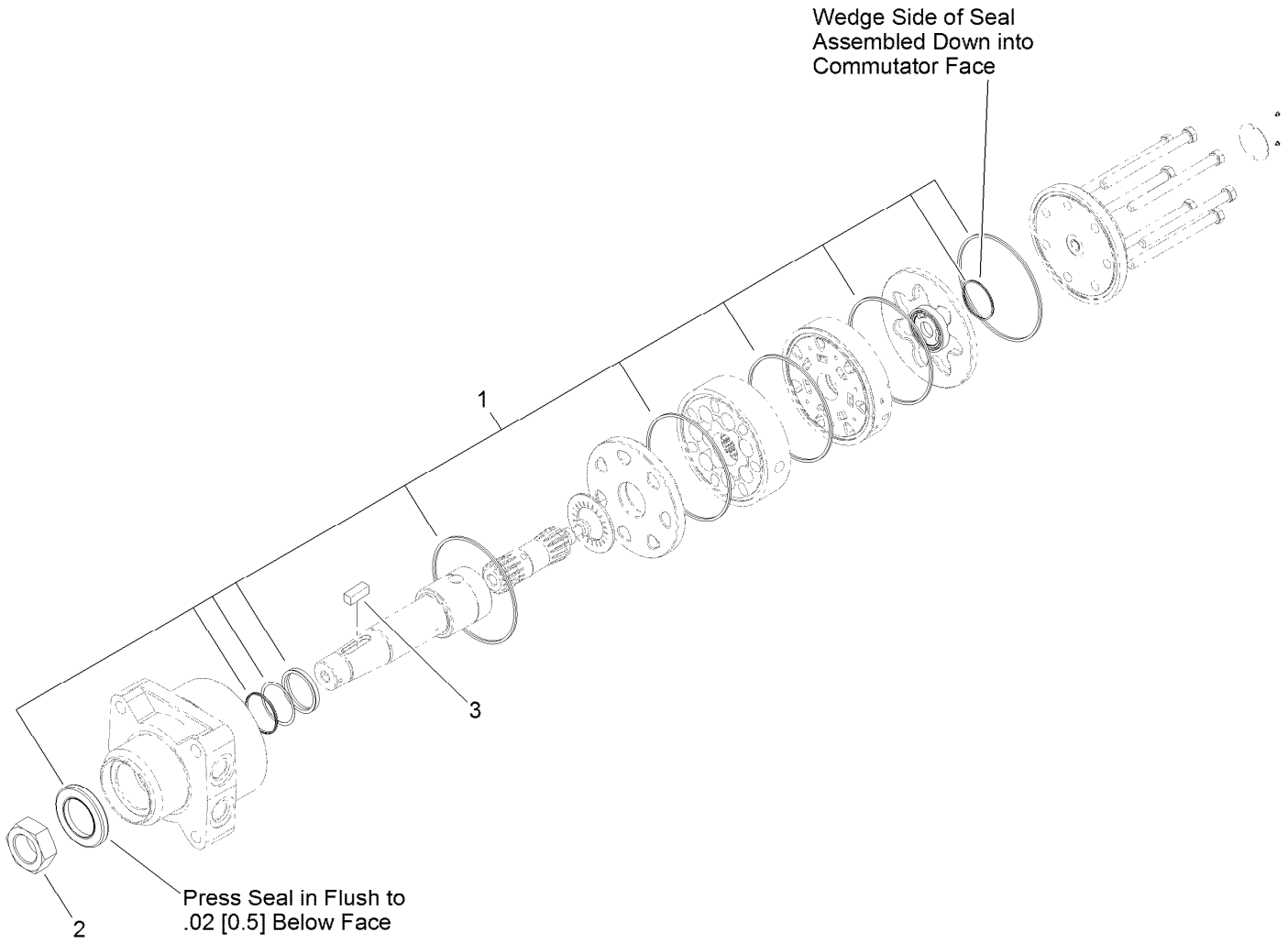

Hydraulic Motor Assembly No. 117-3285 (CW)

Ref.	*Part Number*	*Qty.*	*Description*
1	107-9368	1	Seal Kit
2	117-3290	1	Nut-Hex
3	117-5198	1	Key-Square

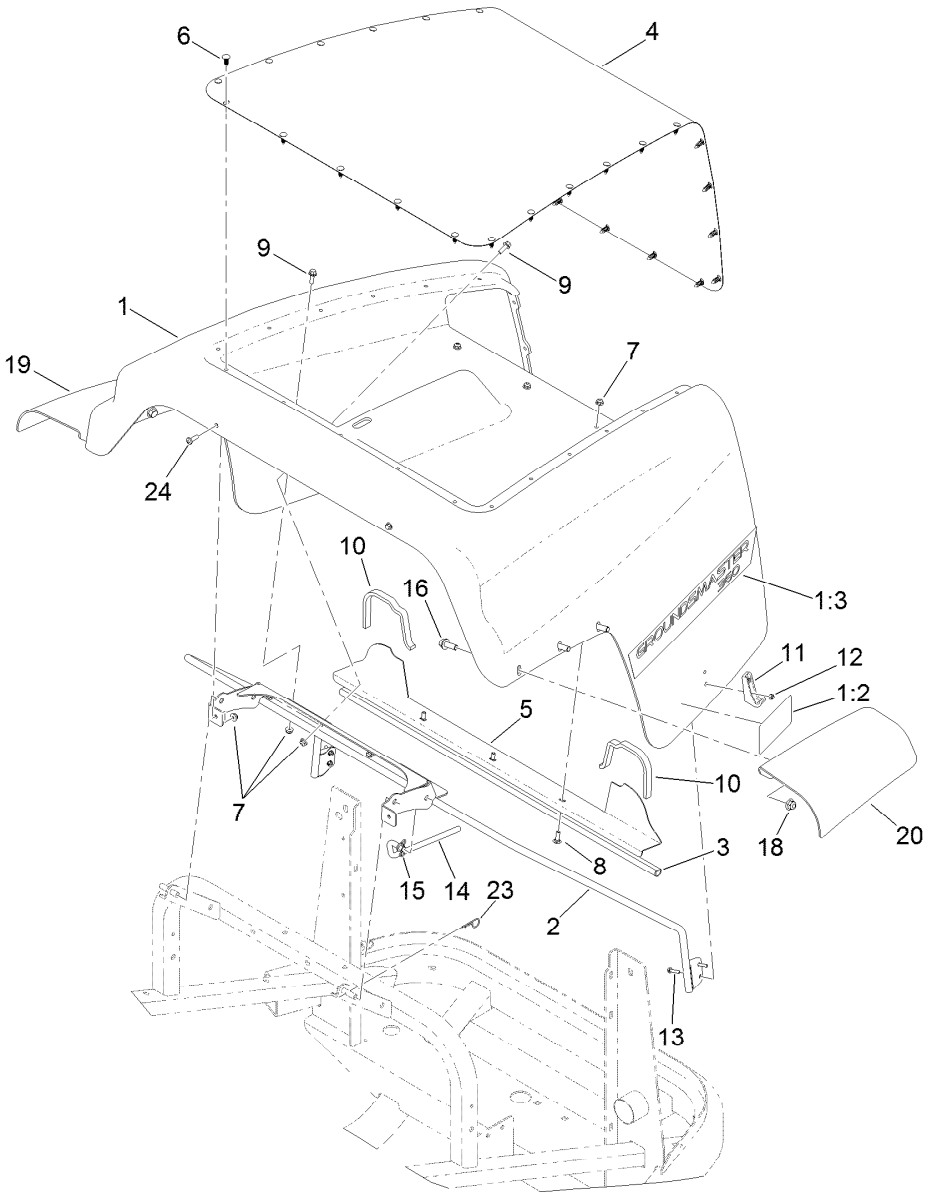

Hood Assembly

Ref.	Part Number	Qty.	Description
1	120-0266	1	Hood ASM
1:2	117-3270	2	Decal-Danger
1:3	117-3279	2	Decal-Hood
2	115-0364-03	1	Mount-Hood
3	115-0423	1	Seal-Bulb
4	115-0370-03	1	Screen
5	115-0422-03	1	Seal-Hood
6	117-2382	29	Plug-Plastic
7	104-7201	11	Nut-Flange, NI
8	3229-1	3	Bolt-CARR
9	3234-4	6	Screw-HHF
10	110-8288	2	Seal-Foam

Ref.	Part Number	Qty.	Description
11	103-2897	2	Latch-Catch
12	3296-2	4	Nut-Lock, NI
13	32105-13	4	Screw-HWH
14	117-3171	1	Rod-Prop
15	119-1415	1	Pin-Cotter, Locking
16	3234-42	6	Screw-HHF
18	104-8301	6	Nut-Flange, NI
19	117-3369	1	Fender-Rear, RH
20	117-3368	1	Fender-Rear, LH
23	9335054	1	Pin-Hair
24	3250-32	2	Screw-PPH

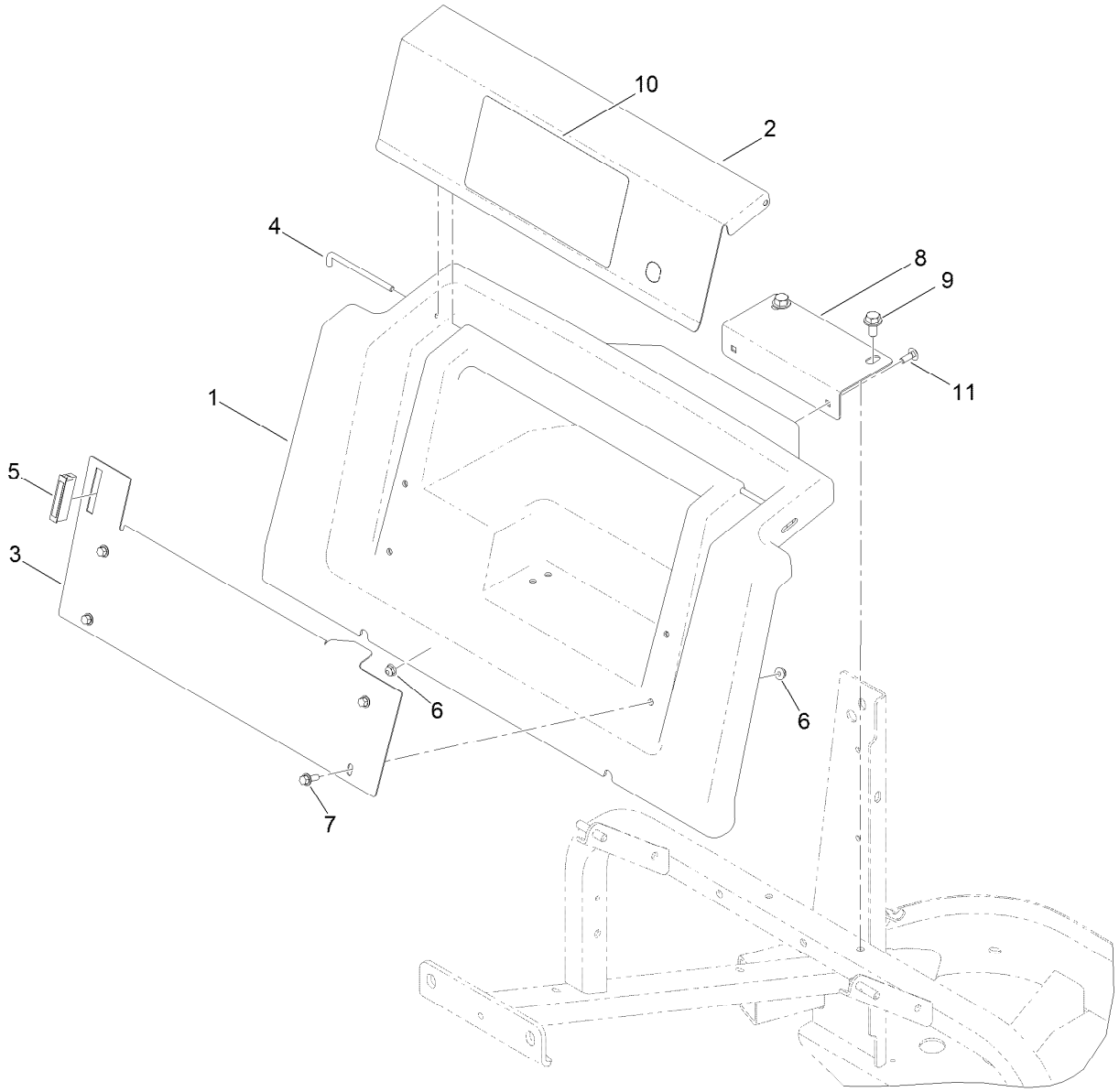

Storage Compartment Assembly

Ref.	*Part Number*	*Qty.*	*Description*
1	120-0222	1	Housing ASM
2	117-3185-03	1	Cover-Storage
3	117-3186-03	1	Panel-Lower
4	117-3189	2	Rod-Hinge
5	58-4250	1	Catch-Magnetic
6	104-7201	6	Nut-Flange, NI
7	3234-4	4	Screw-HHF
8	131-3362-03	1	Support-Housing
9	110-9380	2	Screw-HWH
10	120-0259	1	Decal-Instructions, Service
11	3229-1	2	Bolt-CARR

Deck Lift Valve and Hydraulic Fitting Assembly

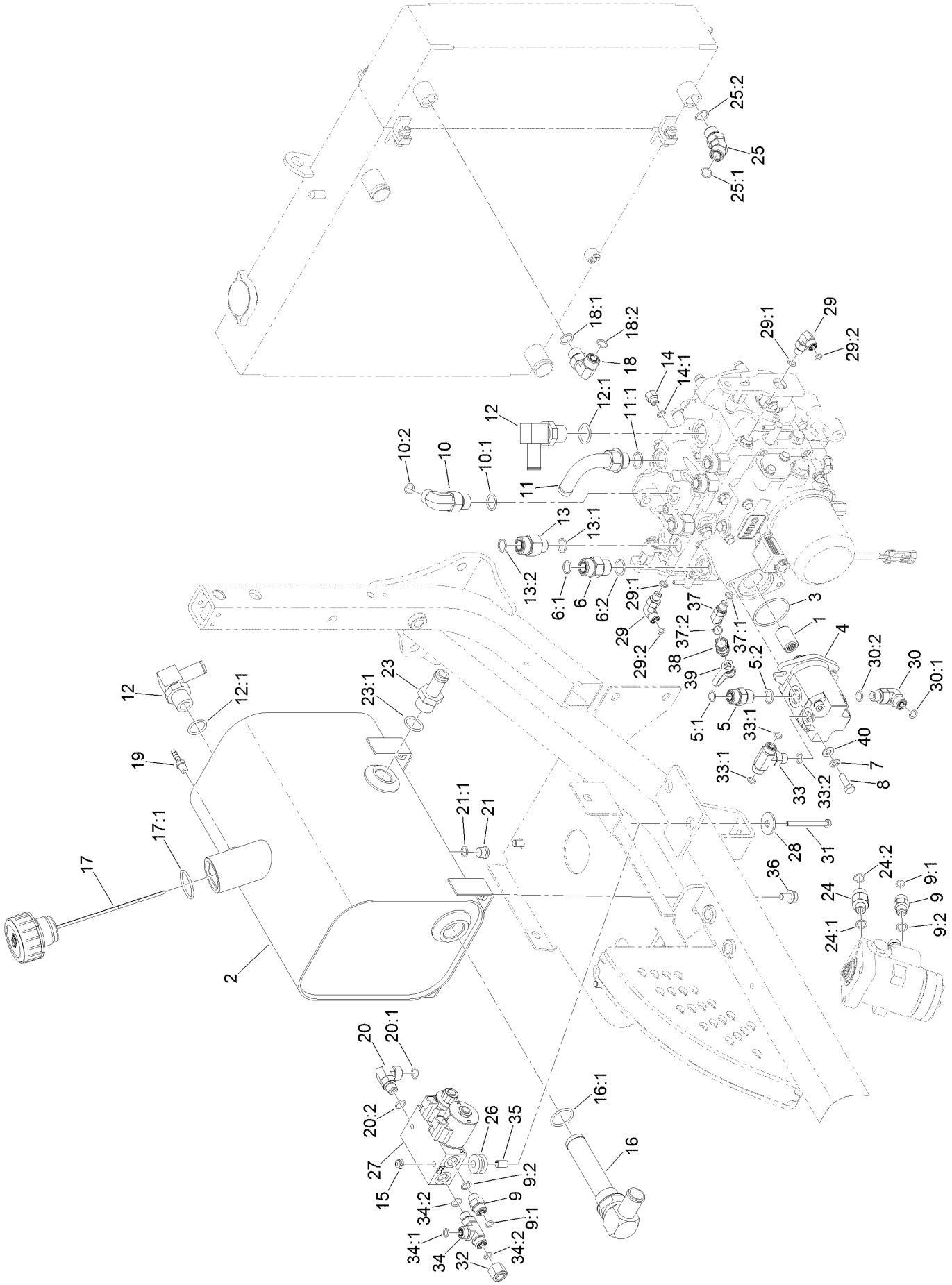

Deck Lift Valve and Hydraulic Fitting Assembly (continued)

Ref.	Part Number	Qty.	Description
1	108-9920	1	Coupler-Spline
2	117-3372	1	Tank-Hydraulic, Metal
3	108-9919	1	O-Ring
4	115-0375	1	Gear Pump ASM
5	340-4	1	Fitting-Str
5:1	237-30	1	O-Ring
5:2	237-79	1	O-Ring
6	340-7	1	Adapter
6:1	237-65	1	O-Ring
6:2	237-80	1	O-Ring
7	3253-4	2	Washer-Lock
8	33114-025	2	Screw-HH
9	340-2	5	Fitting-Str
9:1	237-22	1	O-Ring
9:2	237-42	1	O-Ring
10	340-105	1	Fitting-Elbow 90
10:1	237-80	1	O-Ring
10:2	237-30	1	O-Ring
11	110-5522	1	Fitting-Elbow, 90
11:1	237-80	1	O-Ring
12	353-987	2	Fitting-HYD, 90 DEG (Barbed)
12:1	237-81	1	O-Ring
13	340-155	4	Fitting-HYD, Straight
13:1	237-79	1	O-Ring
13:2	237-151	1	O-Ring
14	110-5536	1	Fitting-HYD, Adapter
14:1	237-78	1	O-Ring
15	104-7201	2	Nut-Flange, NI
16	105-0204	1	Strainer Fitting ASM
16:1	237-146	1	O-Ring
17	117-3389	1	Cap-Tank, Hydraulic
17:1	237-101	1	O-Ring
18	340-98	1	Fitting-HYD, 90 DEG
18:1	237-79	1	O-Ring
18:2	237-30	1	O-Ring
19	304-73	1	Fitting-Straight
20	340-99	1	Fitting-HYD, 90 DEG
20:1	237-30	1	O-Ring
20:2	237-42	1	O-Ring
21	353-989	1	Plug-Hex, Hollow
21:1	237-42	1	O-Ring
23	354-73	1	Fitting-Straight
23:1	237-81	1	O-Ring
24	340-5	1	Fitting-Straight
24:1	237-42	1	O-Ring
24:2	237-30	1	O-Ring
25	340-101	1	Fitting-HYD, 45 DEG
25:1	237-30	1	O-Ring
25:2	237-79	1	O-Ring
26	63-9750	2	Mount
27	131-1934	1	Deck Lift Valve ASM
28	63-8410	2	Washer
29	340-132	2	Fitting-HYD, 90 DEG
29:1	237-78	1	O-Ring
29:2	237-21	1	O-Ring
30	340-77	1	Fitting-Elbow 90
30:1	237-22	1	O-Ring
30:2	237-42	1	O-Ring
31	321-14	2	Screw-HH
32	340-117	1	Cap
33	340-94	1	Adapter
33:1	237-22	2	O-Ring
33:2	237-42	1	O-Ring
34	340-86	1	Fitting-Tee
34:1	237-22	2	O-Ring
34:2	237-42	1	O-Ring
35	80-0650	2	Spacer-Tubular
36	32144-15	4	Screw-HHFTF
37	340-103	1	Fitting-HYD, 45 DEG
37:1	237-78	1	O-Ring
37:2	237-21	1	O-Ring
38	115-8886	1	Nipple-Test
39	354-79	1	Cap-Dust
40	3256-23	2	Washer-Flat

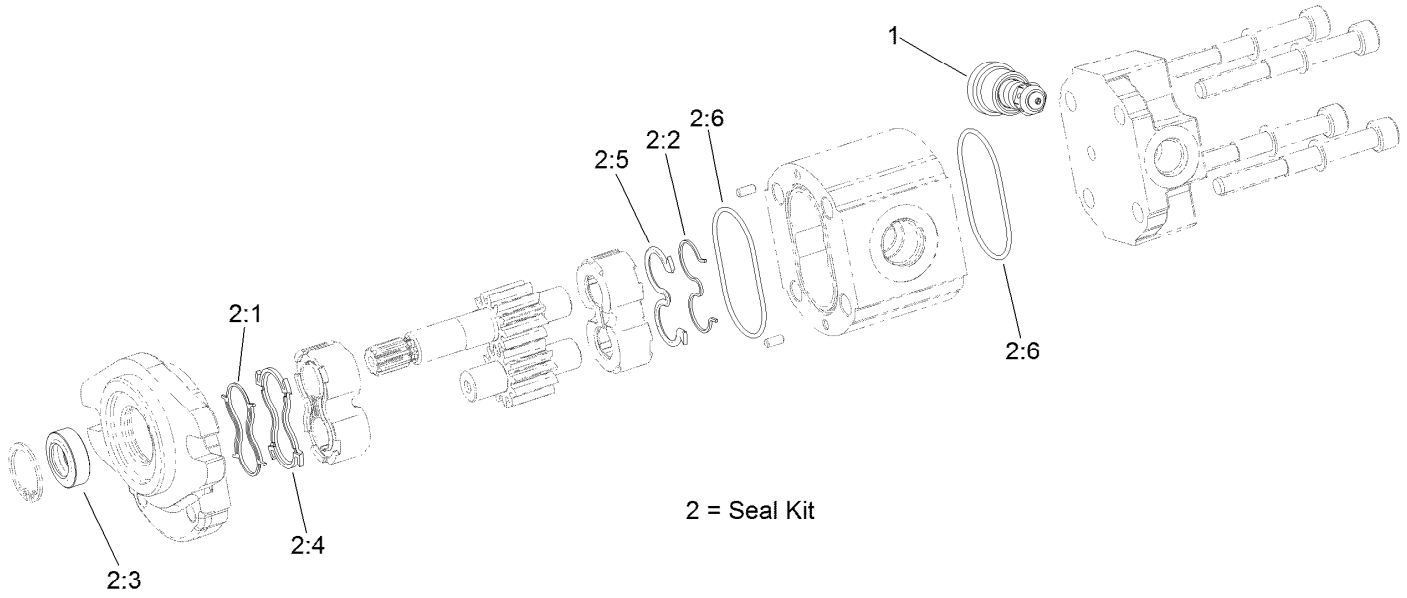

Hydraulic Gear Pump Assembly No. 115-0375

Ref.	*Part Number*	*Qty.*	*Description*
1	115-0376	1	Valve-Relief, 125 BAR
2	112-0199	1	Seal Kit
2:1		1	Seal-Anti Extrusion ●
2:2		1	Seal-Anti Extrusion ●
2:3		1	Seal-Shaft ●
2:4		1	Seal-Upper ●
2:5		1	Seal ●
2:6		2	O-Ring ●

● Not serviced separately

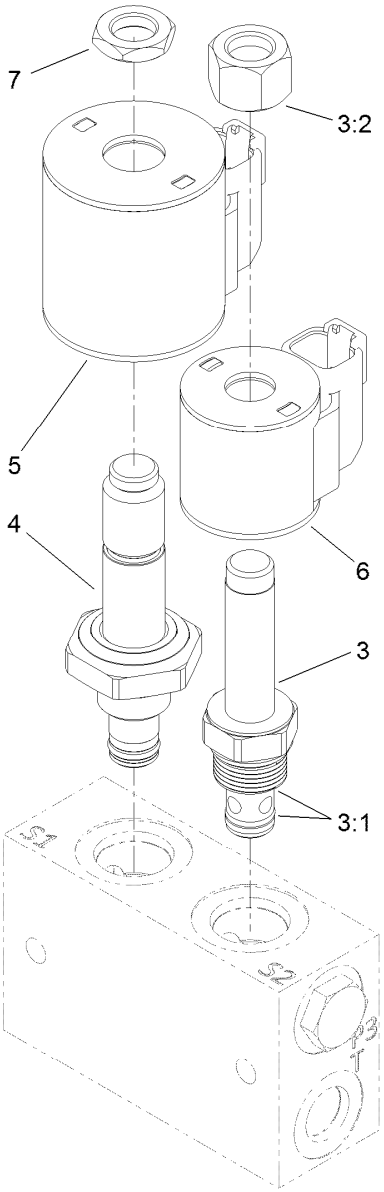

Valve Assembly No. 131-1934

Ref.	Part Number	Qty.	Description
3	107-7517	1	Valve-Solenoid
3:1	105-9156	1	Seal Kit
3:2	107-7812	1	Nut-Solenoid
4	131-1935	1	Valve-Solenoid
5	115-3021	1	Coil-12V
6	119-8036	1	Coil
7	110-2634	1	Nut-Coil

Hydraulic Tube and Hose Assembly

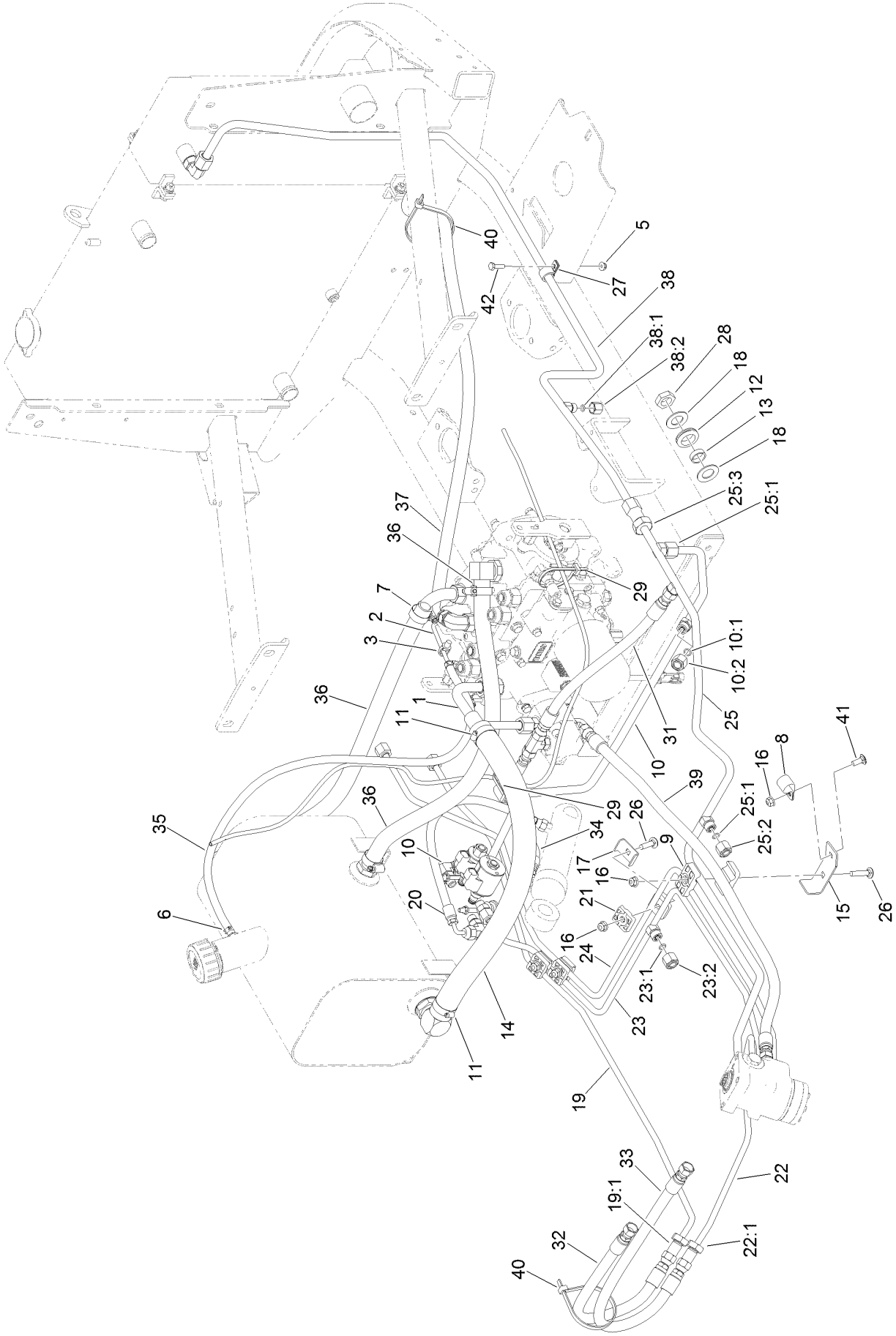

Hydraulic Tube and Hose Assembly (continued)

Ref.	Part Number	Qty.	Description
1	115-0184	1	Suction Tube ASM
2	125-2891	1	Tube ASM
3	32180-030	1	Clip-Tie
5	104-7201	1	Nut-Flange, NI
6	2412-98	2	Clamp-Hose
7	2412-129	4	Clamp-Hose
8	2412-4	1	Clamp
9	56-7972	2	Clamp-Tube
10	125-2893	1	Tube ASM
10:1	237-22	1	O-Ring
10:2	340-117	1	Cap
11	2412-34	2	Clamp-Hose
12	240-5	1	Grommet
13	69-8960	1	Spacer
14	117-3200	1	Hose-Suction
15	120-0245	1	Bracket-Support
16	104-8300	5	Nut-Flange, NI
17	119-1418	6	Plate-Clamp, Short
18	69-8930	2	Washer
19	131-3358	1	Steer Manifold/Front CYL Tube ASM
19:1	237-22	1	O-Ring
20	110-0928	1	Hose-HYD
21	56-7973	6	Clamp-Tube
22	125-2887	1	Steer/Front Tube ASM
22:1	237-22	1	O-Ring
23	125-2890	1	Steer/Lift Tube ASM
23:1	237-22	1	O-Ring
23:2	340-117	1	Cap
24	131-3351	1	Steer/Steer Manifold Tube ASM
25	127-4872	1	Steer/Drain Tube ASM
25:1	237-22	2	O-Ring
25:2	340-117	1	Cap
25:3	237-30	2	O-Ring
26	3230-4	4	Screw-CARR
27	2412-87	1	Clamp-Cable
28	340-127	1	Nut-Bulkhead
29	3290-378	2	Tie-Cable
31	117-3122	1	Hose ASM
32	119-1433	1	Hose ASM
33	100-5629	1	Hose ASM
34	117-3123	1	HYD Hose ASM
35	109-0275	1	Hose-Fuel
36	117-3121	2	Hose ASM
37	105-4193	1	HYD Hose ASM
38	117-3114	1	Tube-Drain, Cooler
38:1	237-21	1	O-Ring
38:2	117-3297	1	Fitting-Cap
39	119-8114	1	HYD Hose ASM
40	3334-945	2	Tie-Cable
41	3230-23	1	Screw-CARR
42	321-5	1	Screw-HH

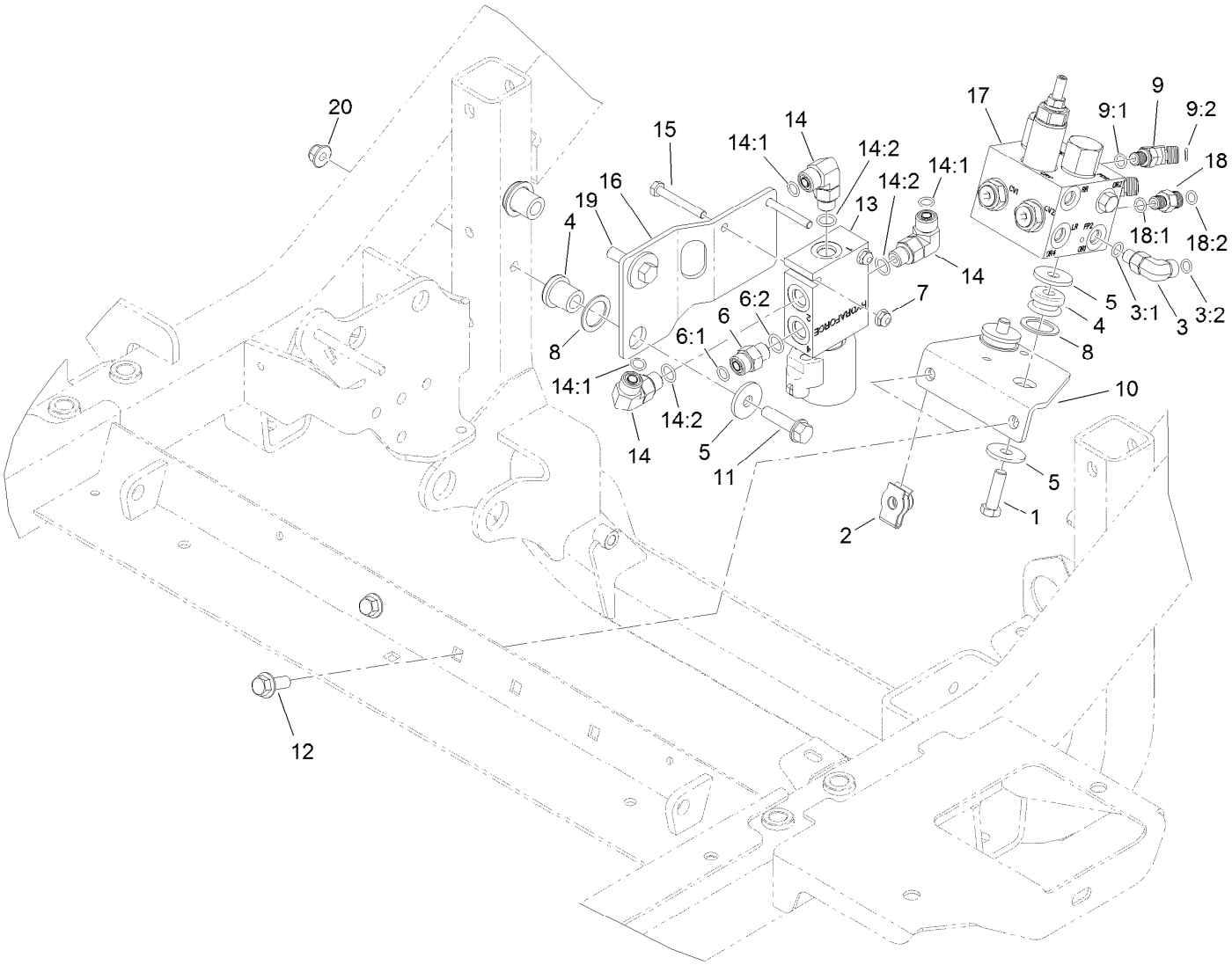

Hydraulic Valve Assembly

Ref.	Part Number	Qty.	Description
1	323-7	2	Screw-HH
2	105-4886	2	Nut-Tinnerman
3	340-132	1	Fitting-HYD, 90 DEG
3:1	237-78	1	O-Ring
3:2	237-21	1	O-Ring
4	63-9750	4	Mount
5	63-8410	6	Washer
6	340-2	1	Fitting-Str
6:1	237-22	1	O-Ring
6:2	237-42	1	O-Ring
7	104-7201	2	Nut-Flange, NI
8	1-303352	4	Washer-Spindle
9	340-103	2	Fitting-HYD, 45 DEG
9:1	237-78	1	O-Ring
9:2	237-21	1	O-Ring
10	119-1409-03	1	Mount-Plate

Ref.	Part Number	Qty.	Description
11	323-20	1	Screw-HH
12	3234-42	2	Screw-HHF
13	115-0280	1	Steer Selector Valve ASM
14	340-77	3	Fitting-Elbow 90
14:1	237-22	1	O-Ring
14:2	237-42	1	O-Ring
15	321-11	2	Screw-HH
16	131-3352-03	1	Plate-Mount, Valve
17	117-2247	1	Cross-Trax Traction Valve ASM
18	340-92	1	Fitting-Str
18:1	237-78	1	O-Ring
18:2	237-21	1	O-Ring
19	323-8	1	Screw-HH
20	104-8301	2	Nut-Flange, NI

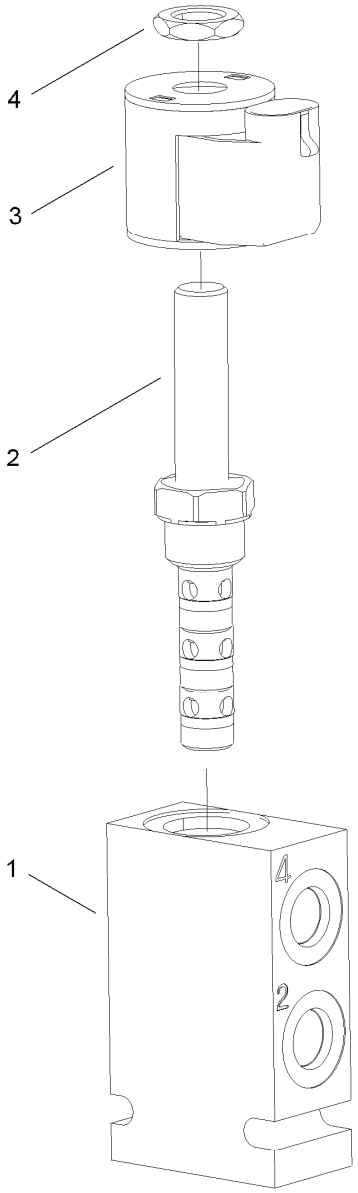

Steering Selector Valve Assembly No. 115-0280

Ref.	*Part Number*	*Qty.*	*Description*
1		1	Block-Manifold ●
2	119-8042	1	Valve-Solenoid
3	110-6344	1	Coil-12V, Dc
4	110-2634	1	Nut-Coil

● Not serviced separately

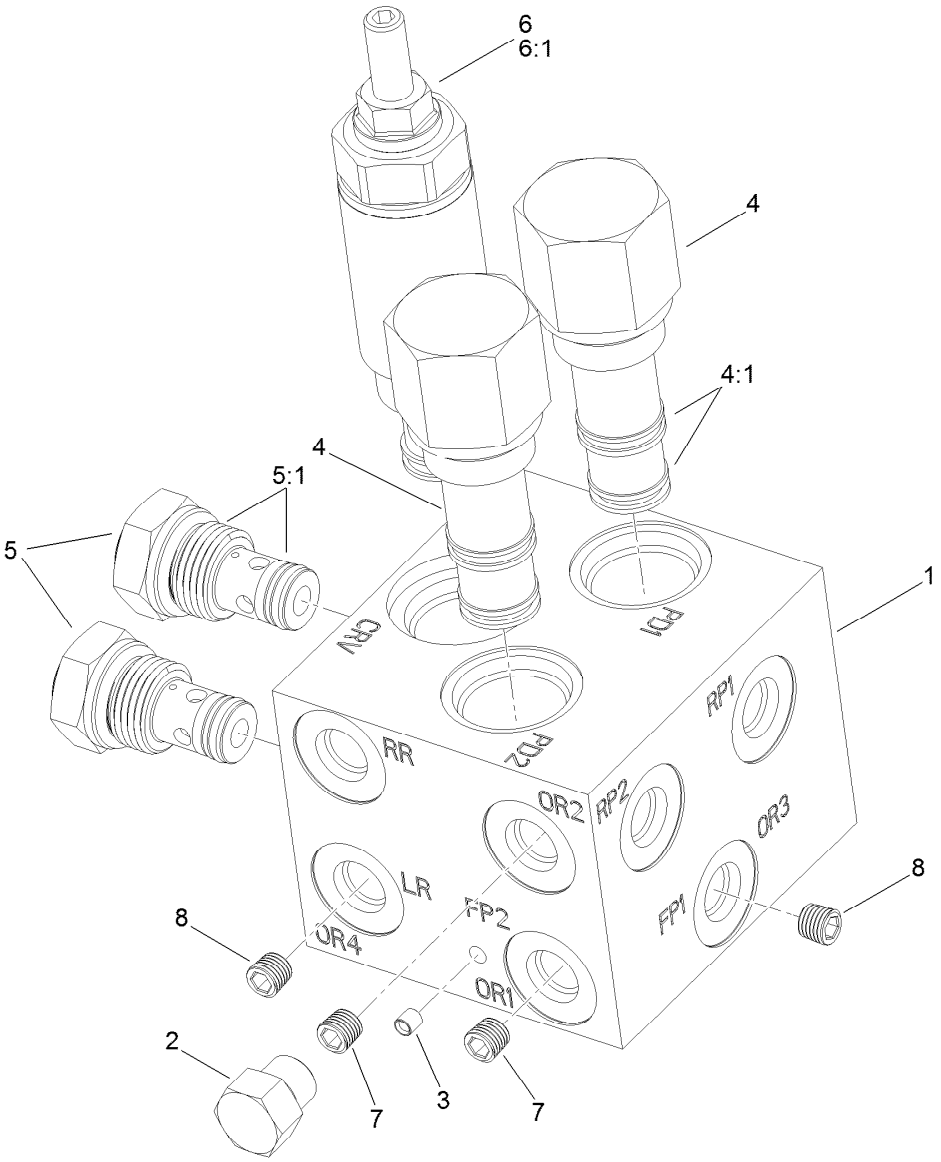

Cross-Trax Traction Valve Assembly No. 117-2247

Ref.	*Part Number*	*Qty.*	*Description*
1		1	Block-Manifold ●
2	117-0115	1	Plug
3		1	Plug-4Mm ●
4	119-8028	2	Valve-Pilot, Directional
4:1	119-8029	1	Pilot Valve Seal Kit
5	119-8030	2	Valve-Check
5:1	119-8031	1	Seal Kit-Check Valve
6	119-8032	1	Valve-Relief
6:1	119-8033	1	Relief Valve Seal Kit
7	119-8034	2	Orifice-.090
8	119-8035	2	Orifice-.040

● Not serviced separately

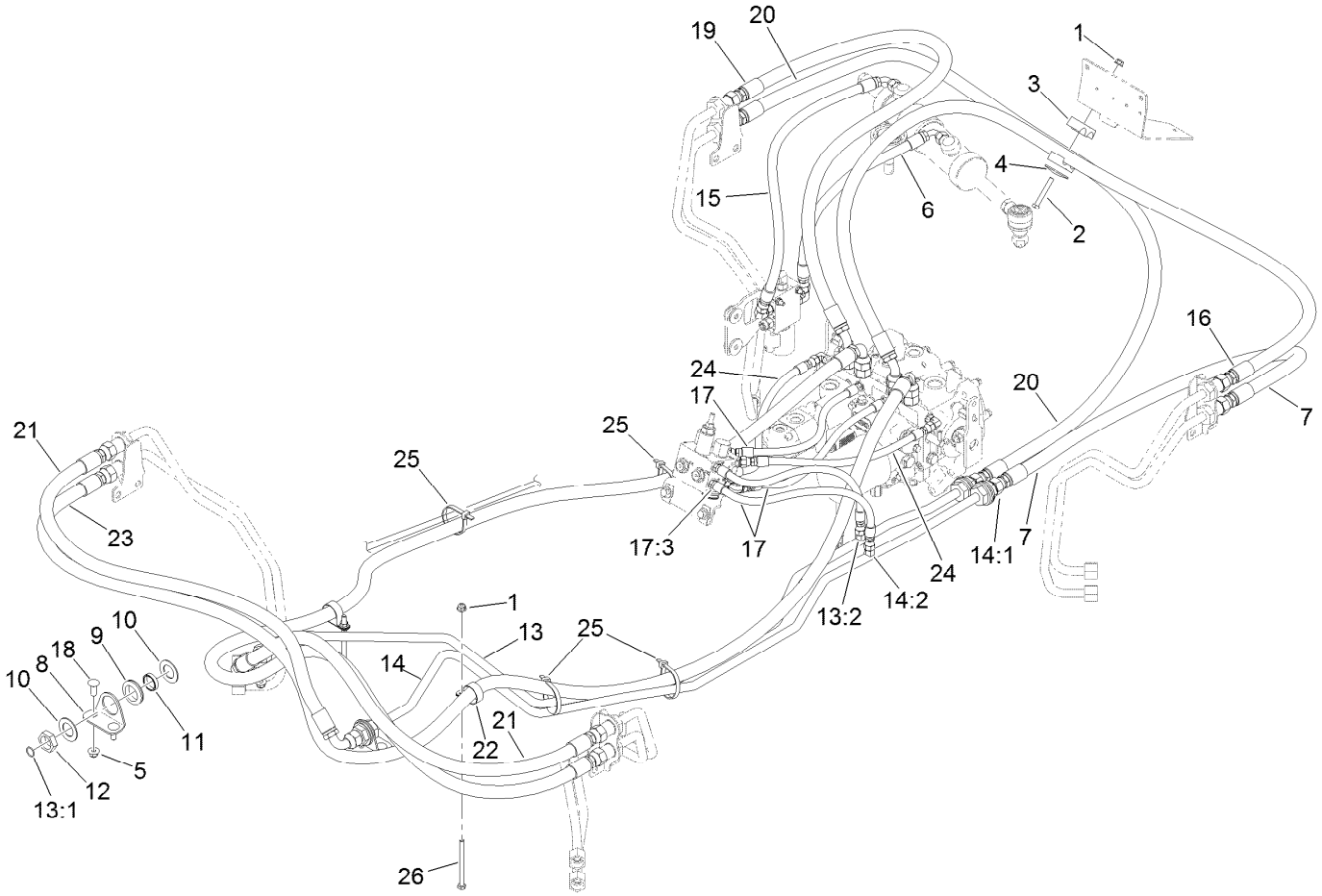

4 Wheel Drive Hydraulic Hose Assembly

Ref.	Part Number	Qty.	Description
1	104-8300	3	Nut-Flange, NI
2	322-11	1	Screw-HH
3	56-7974	2	Clamp-Tube
4	69-9761	1	Plate-Cover
5	104-8301	4	Nut-Flange, NI
6	131-3353	1	Hose ASM
7	119-1435	1	Hose ASM
8	115-0479	2	Bracket-Bulkhead
9	240-3	4	Grommet-Rubber
10	69-9010	8	Washer
11	125-1984	4	Spacer
12	340-74	4	Nut-Lock, Bulkhead
13	117-3115	1	Tube ASM-Front Trax, RH
13:1	237-65	2	O-Ring
13:2	237-20	1	O-Ring
14	117-3116	1	Tube ASM-Front Trax, LH

Ref.	Part Number	Qty.	Description
14:1	237-65	2	O-Ring
14:2	237-21	1	O-Ring
15	131-3354	1	Hose ASM
16	117-3249	1	Hose ASM
17	115-0377	4	Hose ASM
17:3	237-78	1	O-Ring
18	3231-22	4	Screw-CARR
19	131-5506	1	Hose ASM
20	117-3248	1	Hose ASM
21	117-3124	2	Hose ASM
22	2412-74	2	R-Clamp
23	117-3126	2	Hose ASM
24	117-3127	2	Hose ASM
25	3334-945	4	Tie-Cable
26	322-19	2	Screw-HH

Traction Pedal Assembly

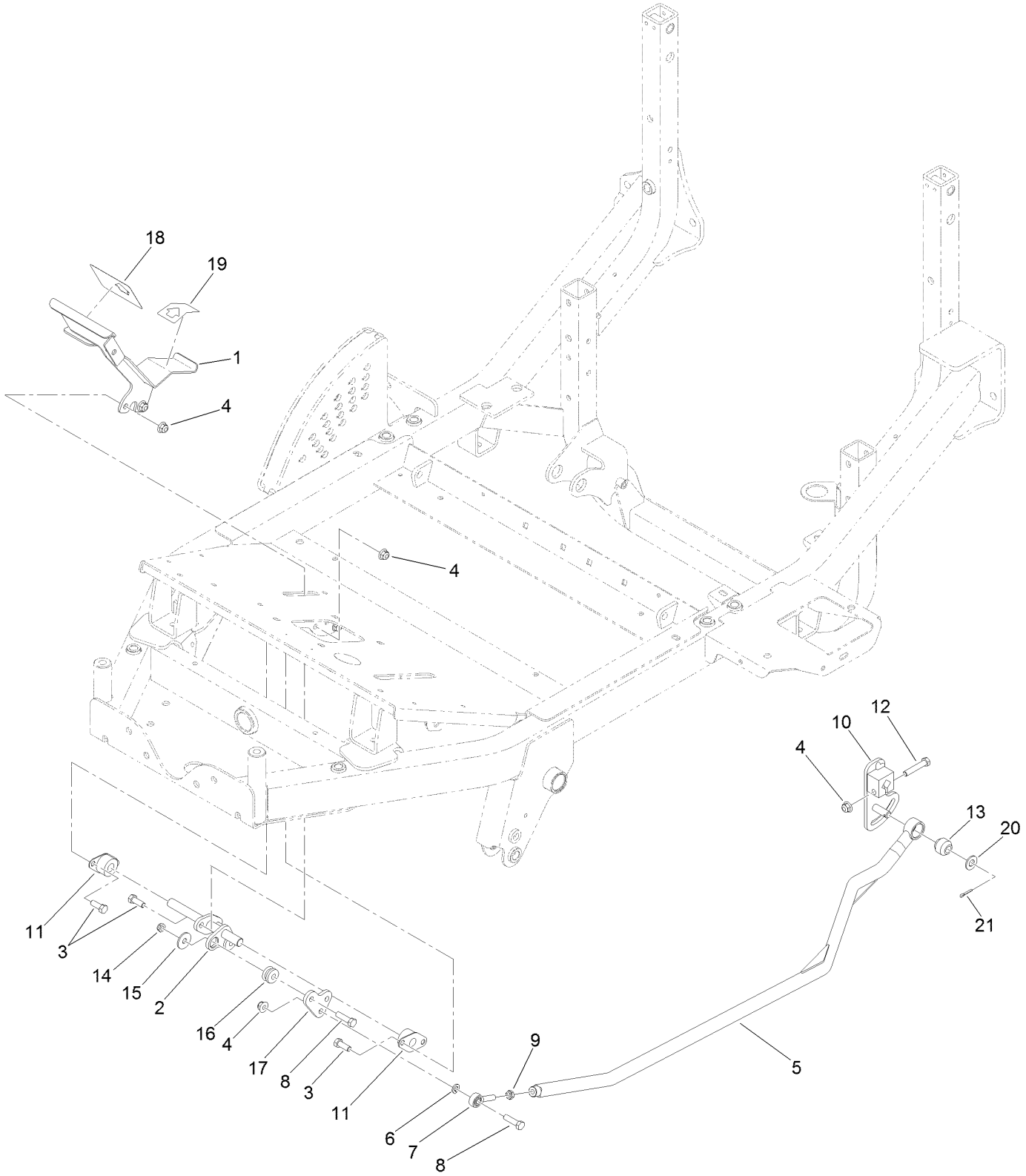

Traction Pedal Assembly (continued)

Ref.	Part Number	Qty.	Description
1	117-3070-01	1	Pedal
2	125-4402	1	Pivot-Pedal, Isolated
3	323-6	6	Screw-HH
4	104-8301	8	Nut-Flange, NI
5	136-4451-03	1	Rod-Traction
6	3253-21	1	Washer-Lock
7	2411-36	1	Bearing-End, Rod
8	323-29	3	Screw-HH
9	3220-3	1	Nut-HJ
10	131-5546-03	1	Lever-Traction
11	256-236	2	Bearing-Mount, Flange
12	323-10	1	Screw-HH
13	23-2270	1	Bushing-Rubber
14	3296-59	2	Nut-Lock, NI
15	93-8806	2	Washer-Hardened
16	63-9750	2	Mount
17	136-4453	1	Plate-Linkage, Traction
18	94-3307	1	Pad-Pedal, Traction
19	94-3308	1	Pad-Pedal, Traction
20	3256-26	1	Washer-Flat
21	3272-10	1	Pin-Cotter

Neutral System Assembly

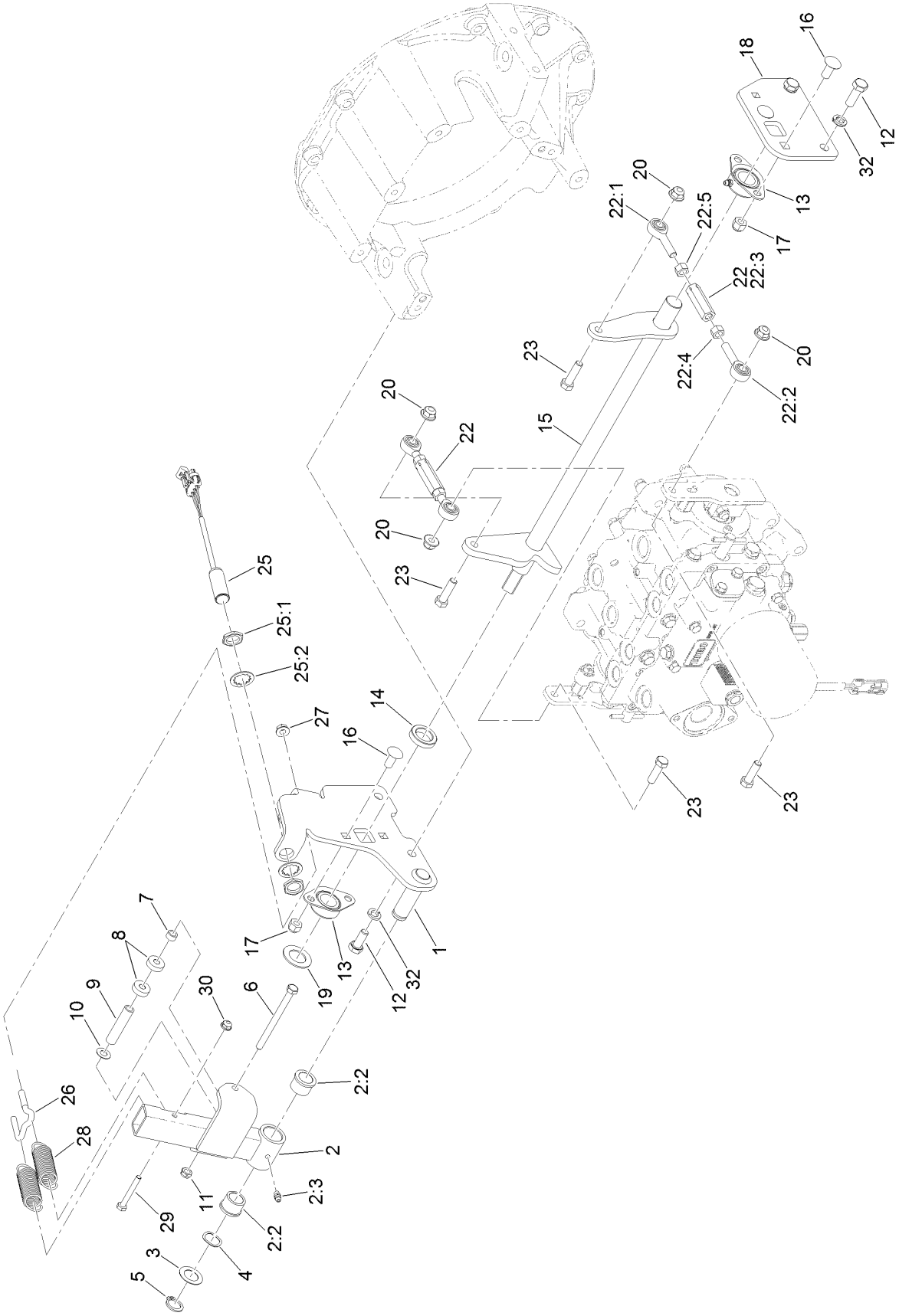

Neutral System Assembly (continued)

Ref.	Part Number	Qty.	Description
1	136-4484-03	1	Plate-End, Neutral
2	125-4366	1	Neutral Arm ASM
2:2	256-113	2	Bushing-Flange
2:3	302-5	1	Fitting-Grease
3	3-6498	1	Washer-Thrust
4	119-4164	1	Washer-Wave
5	32120-93	1	Ring-Retaining
6	322-19	1	Screw-HH
7	136-4455	1	Sleeve-Spacer
8	121-6835	2	Bearing-Ball
9	136-4454	1	Sleeve-Spacer
10	73-0041	1	Washer-Thrust
11	3296-47	1	Nut-Lock, NI
12	120-9635	4	Screw-HH
13	131-5529	2	Bearing, Side Flange
14	125-2879	1	Spacer-Shaft, Neutral
15	131-5547-03	1	Shaft-Neutral
16	3231-27	4	Screw-CARR
17	3296-39	4	Nut-Lock, NI

Ref.	Part Number	Qty.	Description
18	125-9213-03	1	Plate-End, Neutral
19	119-2332	1	Washer-Flat
20	104-8301	4	Nut-Flange, NI
22	125-2870	2	Link ASM
22:1	125-4389	1	Bearing-End, Rod
22:2	2411-36	1	Bearing-End, Rod
22:3	125-4390	1	Hex-Adjustment
22:4	3219-3	1	Nut-Hex
22:5	3219-20	1	Nut-Hex, LH
23	323-29	4	Screw-HH
25	115-5300	1	Proximity Switch ASM
25:1	117-3207	2	Nut-Hex
25:2	117-3208	2	Washer-Lock, Internal Tooth
26	131-3376	1	Hook-Spring, Dual
27	32128-25	1	Nut-HF
28	131-3374	2	Spring-Extension
29	321-11	1	Screw-HH
30	104-7201	1	Nut-Flange, NI
32	48-9590	4	Washer-Lock

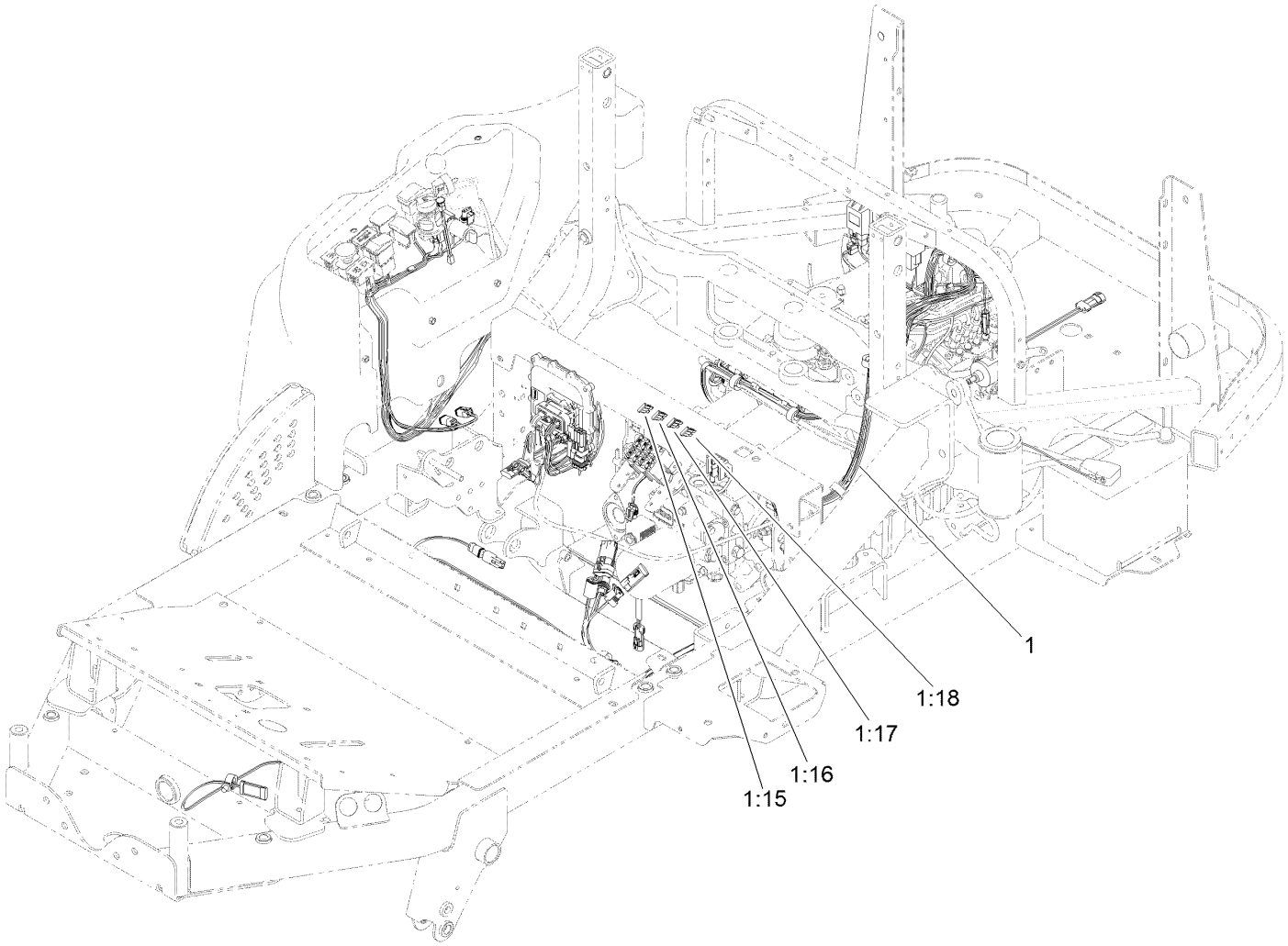

Electrical Assembly

Ref.	*Part Number*	*Qty.*	*Description*
1	122-0170	1	Harness-Wire, 4Wd
1:15	94-6710	1	Fuse-2 Amp
1:16	114241	3	Fuse-Blade, 7.5 Amp
1:17	218-578	4	Fuse-Blade, 10 Amp
1:18	109355	1	Fuse-Blade, 15 Amp

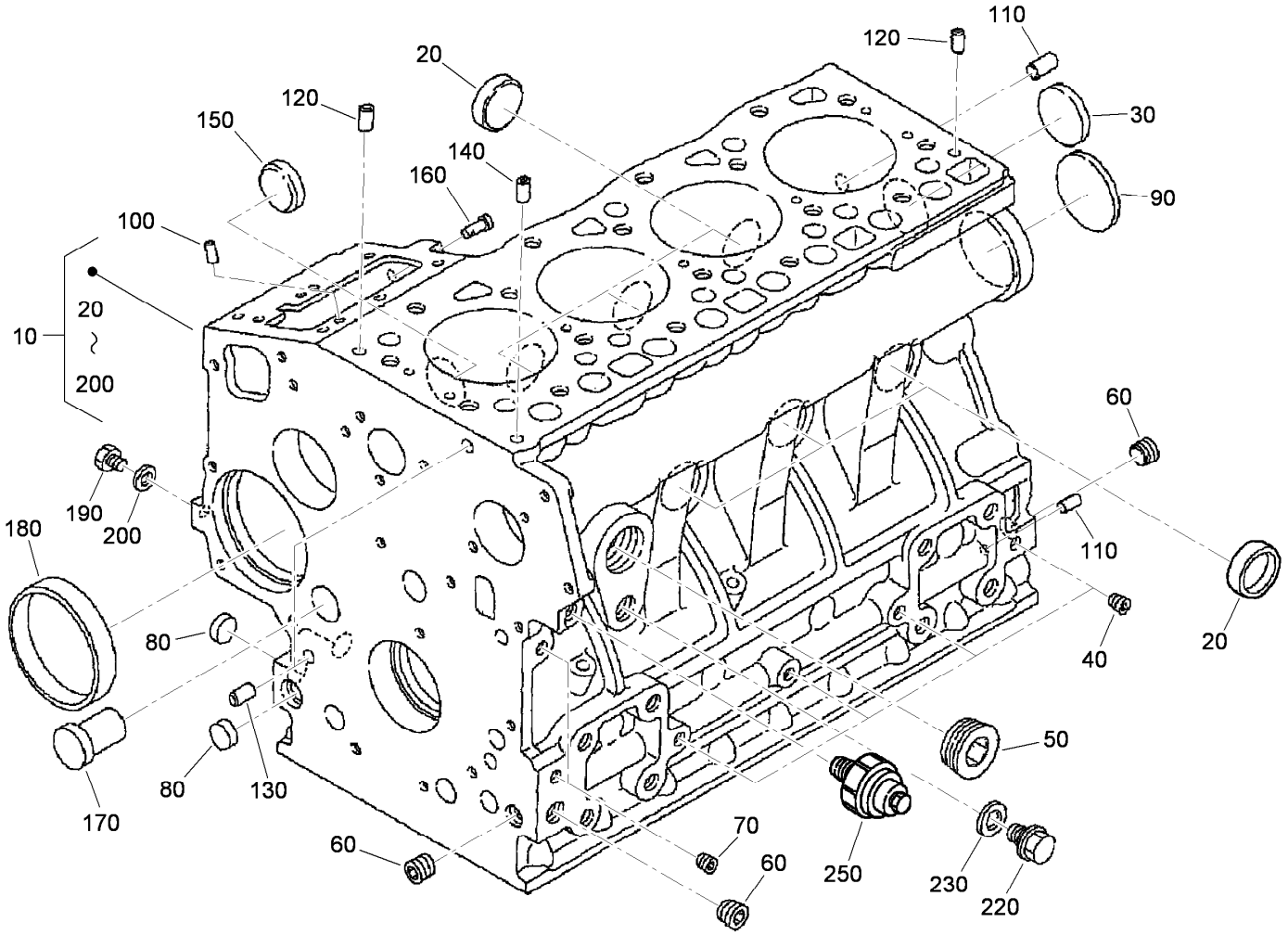

Crankcase Assembly

Ref.	Part Number	Qty.	Description
10	120-2558	1	Crankcase ASM
20	98-9398	6	Cap-Sealing
30	98-7539	1	Cap-Sealing
40	98-7540	4	Plug
50	105-3779	1	Plug
60	98-9597	3	Plug
70	98-7487	2	Plug
80	98-9379	3	Plug-Expansion
90	98-9668	1	Plug-Expansion
100	98-9375	2	Pin-Straight
110	98-9377	2	Pin-Straight
120	98-9376	2	Pin-Straight

Ref.	Part Number	Qty.	Description
130	98-9387	2	Pin-Pipe
140	98-9539	1	Pin-Pipe
150	98-9599	1	Plug
160	105-3796	1	Pin-Spring, Start
170	98-9675	1	Plug
180	98-9656	1	Bushing-Governor, Gear
190	120-2559	1	Plug
200	98-7428	1	Gasket
220	99-3447	1	Plug
230	106-7056	1	Gasket
250	98-9416	1	Switch-Oil

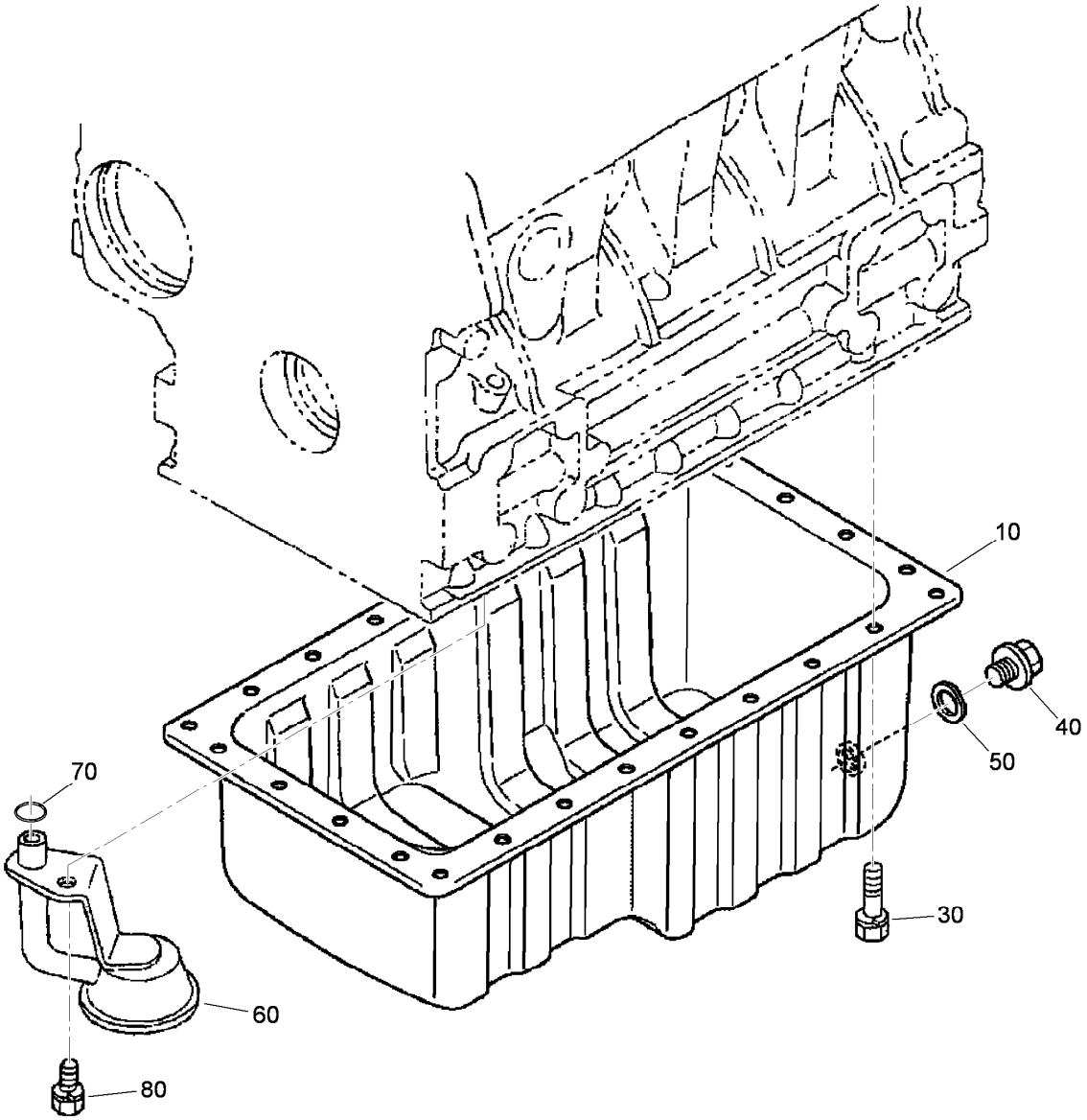

Oil Pan Assembly

Ref.	Part Number	Qty.	Description
10	112-0186	1	Oil Pan ASM
30	98-9351	26	Bolt
40	114-8151	1	Plug-Drain
50	98-7524	1	Gasket
60	112-7003	1	Head-Filter, Oil
70	105-3776	1	O-Ring
80	98-7526	1	Bolt

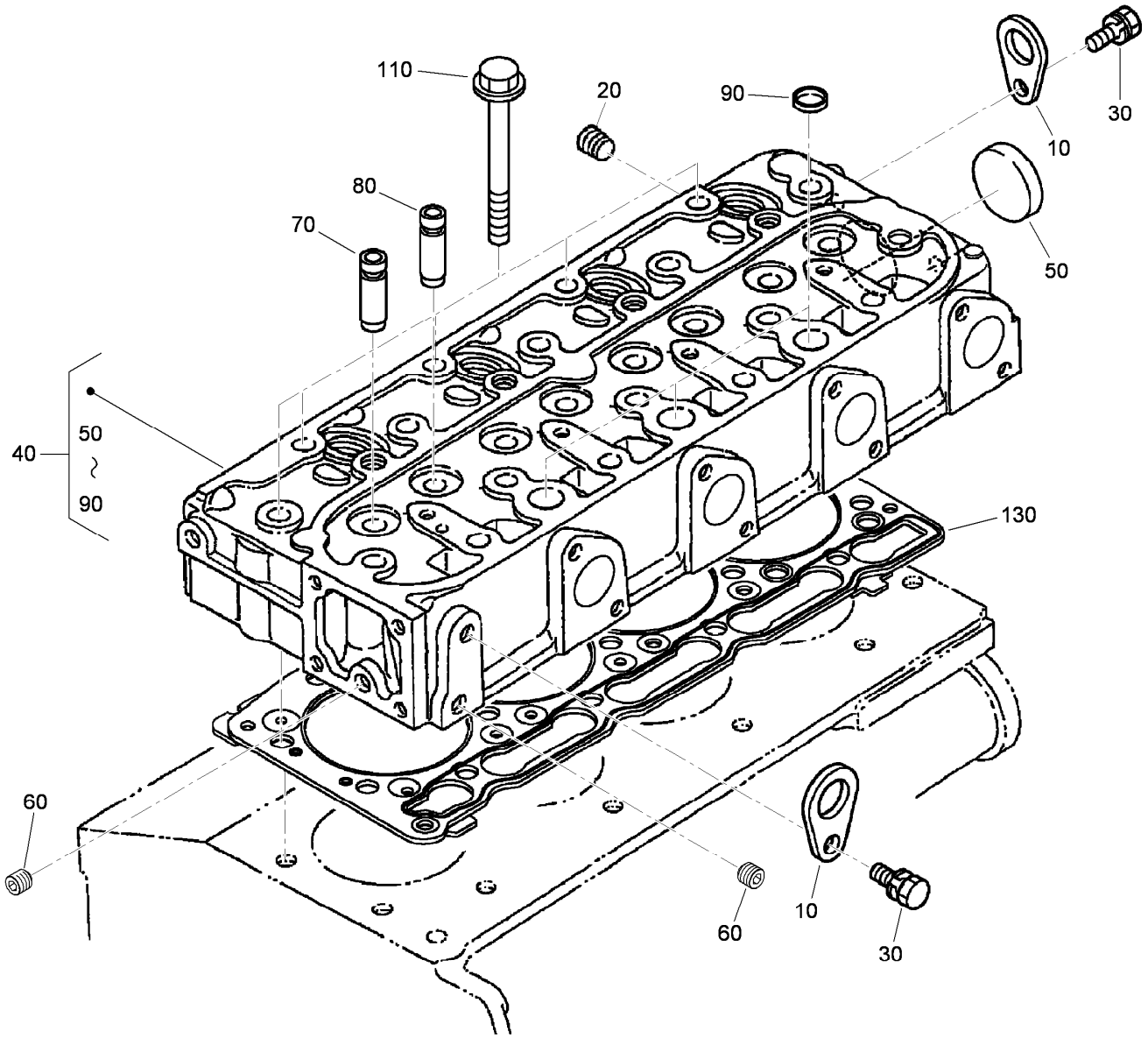

Cylinder Head Assembly

Ref.	Part Number	Qty.	Description
10	98-7531	2	Hook-Engine
20	98-9444	1	Plug
30	100-9195	2	Bolt
40	115-3012	1	Cylinder Head ASM
50	105-3705	1	Cap-Sealing
60	98-7540	2	Plug
70	107-9066	4	Guide-Valve, Inlet
80	107-9067	4	Guide-Valve, Exhaust
90	98-9389	3	Cap-Sealing
110	98-9479	18	Bolt-Head, Cylinder
130	108-2855	1	Gasket-Head, Cylinder

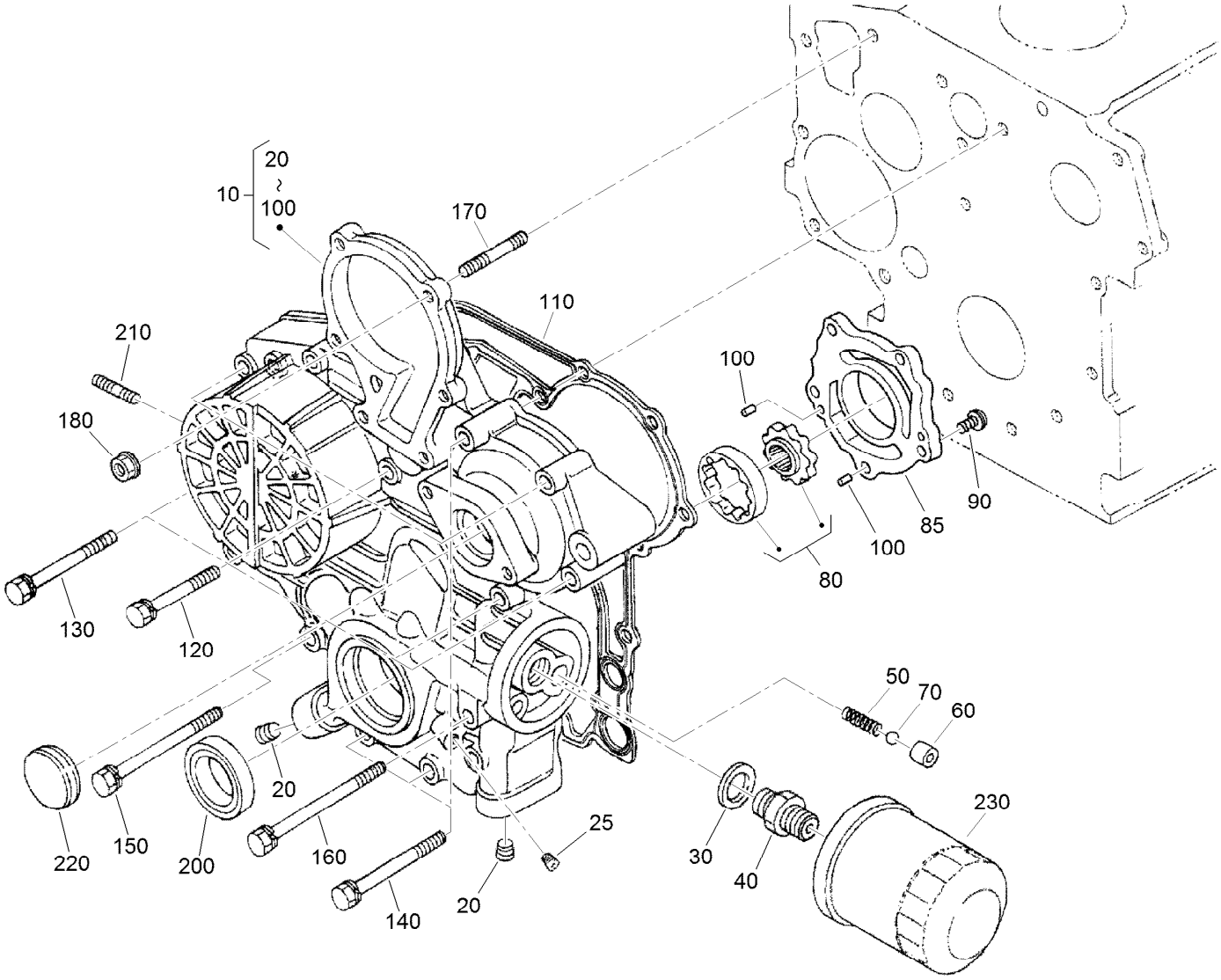

Gear Case Assembly

Ref.	Part Number	Qty.	Description
10	115-4105	1	Gear Case ASM
20	127-0425	2	Plug
25	98-7487	1	Plug
30	98-7562	1	Washer-Plain
40	98-9388	1	Joint-Pipe
50	98-9544	1	Spring
60	98-9543	1	Seat-Valve
70	98-9380	1	Ball
80	98-9540	1	Oil Pump Rotor ASM
85	107-9069	1	Cover-Pump, Oil
90	107-9071	5	Screw
100	107-9072	2	Pin-Straight

Ref.	Part Number	Qty.	Description
110	98-9633	1	Gasket-Case, Gear
120	107-9073	3	Bolt
130	105-3797	4	Bolt
140	98-9356	4	Bolt
150	107-9074	1	Bolt
160	98-9586	1	Bolt
170	105-3709	1	Stud
180	100-2203	1	Nut-Flange
200	119-8038	1	Seal-Oil
210	105-3710	2	Stud
220	98-9641	1	Cover-Case, Gear
230	108-3841	1	Filter-Oil

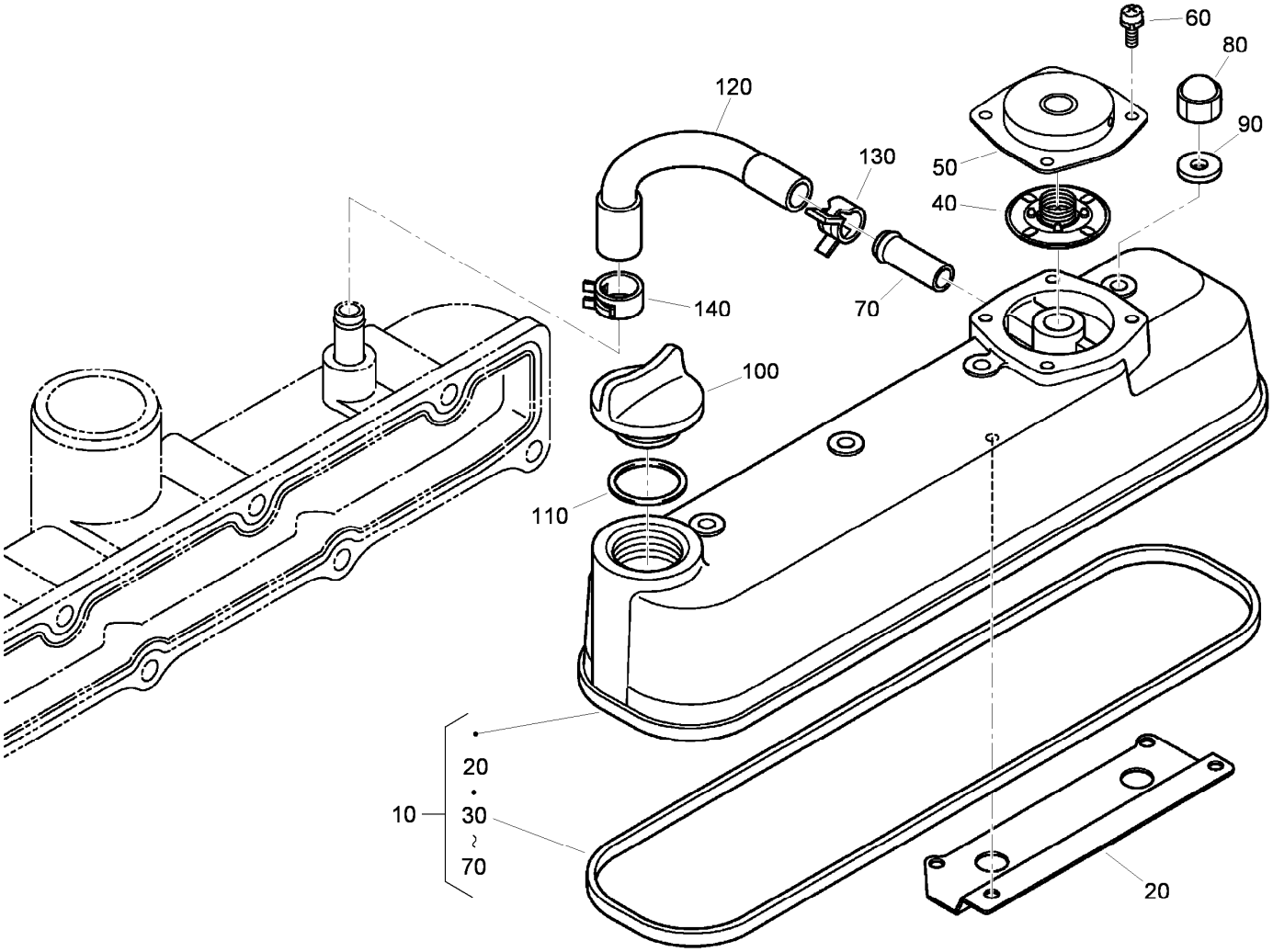

Cylinder Head Cover Assembly

Ref.	*Part Number*	*Qty.*	*Description*
10	115-4130	1	Cylinder Head Cover ASM
20	108-2857	1	Shield-Breather
30	105-3712	1	Gasket-Cover, Head
40	110-3715	1	Valve-Breather
50	110-3714	1	Cover-Breather
60	98-9364	4	Screw (With Washer)
70	98-7766	1	Pipe-Return, Water
80	98-9455	4	Nut-Cap
90	98-9454	4	Gasket
100	107-9075	1	Plug-Filler, Oil
110	120-2560	1	O-Ring
120	108-2858	1	Tube-Breather
130	108-2859	1	Clamp-Hose
140	108-2860	1	Clamp-Hose

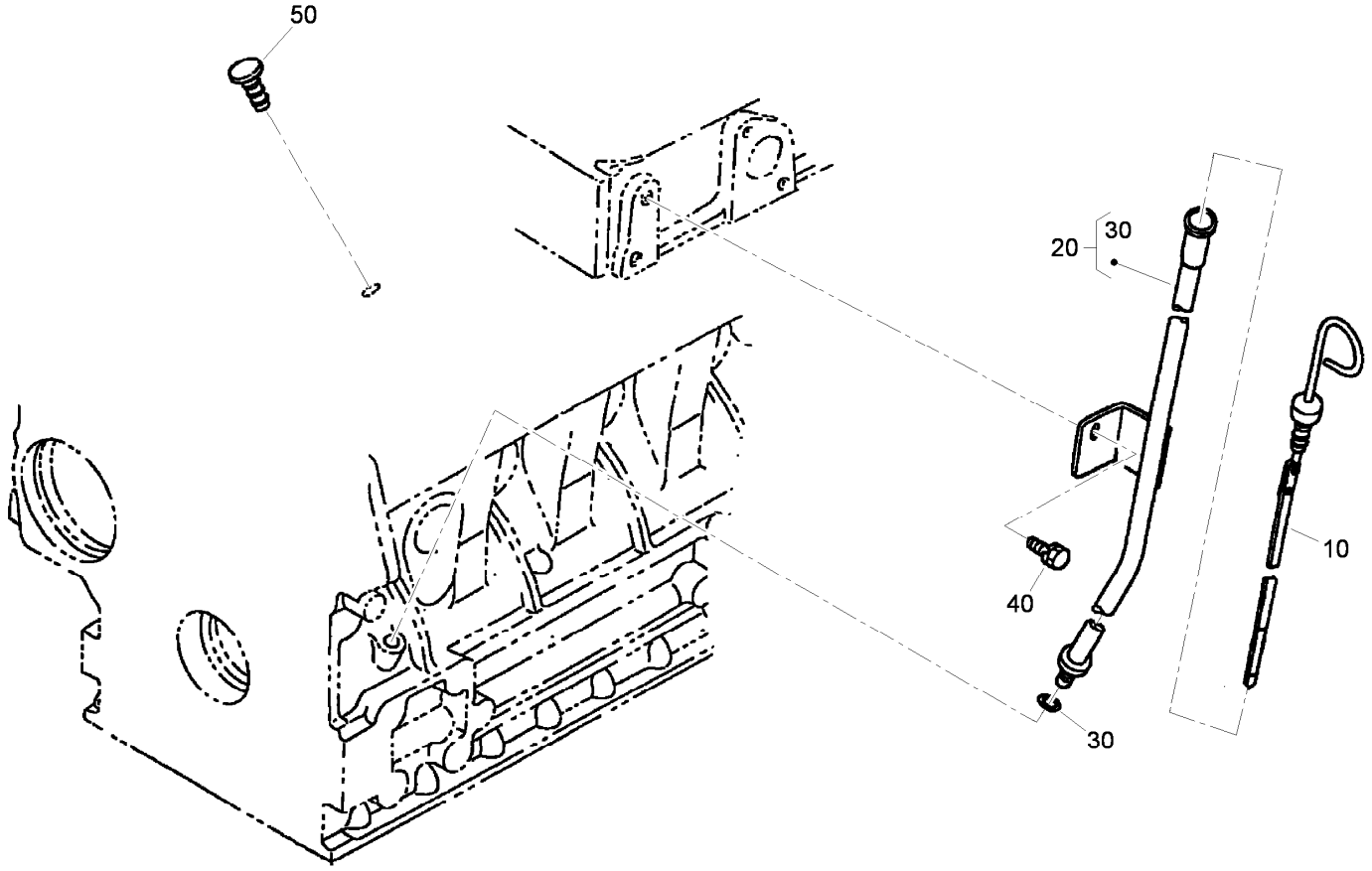

Dipstick and Guide Assembly

Ref.	*Part Number*	*Qty.*	*Description*
10	98-9670	1	Gauge-Oil
20	98-9672	1	Oil Gauge Guide ASM
30	98-9722	1	O-Ring
40	100-9195	1	Bolt
50	110-3720	1	Plug-Gauge, Oil

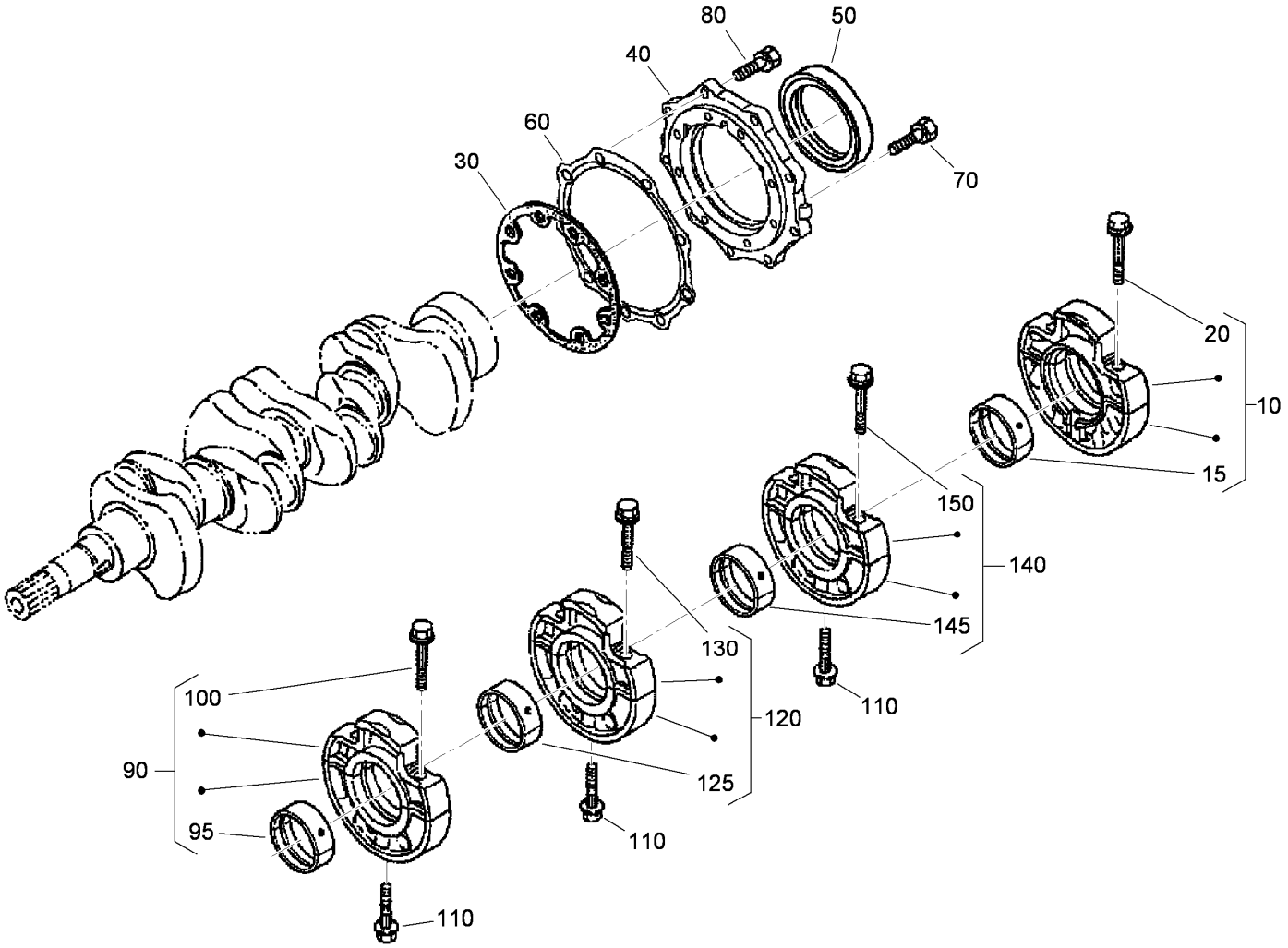

Main Bearing Case Assembly

Ref.	Part Number	Qty.	Description
10	112-7026	1	Wheel Bearing Case ASM
15	115-4121	1	Metal-Crankshaft (STD)
20	98-9484	2	Bolt-Case, Bearing
30	98-9634	1	Gasket-Case, Bearing
40	112-7046	1	Cover-Case, Bearing
50	112-0180	1	Seal-Oil
60	112-7037	1	Gasket-Cover, Case
70	98-9352	8	Bolt
80	98-7568	9	Bolt
90	115-4106	1	Main Bearing Case ASM

Ref.	Part Number	Qty.	Description
95	98-9524	1	Metal-Crankshaft (STD Set)
100	98-9484	2	Bolt-Case, Bearing
110	98-9485	3	Bolt-Case, Bearing
120	115-4107	1	Main Bearing Case ASM
125	98-9524	1	Metal-Crankshaft (STD Set)
130	98-9484	2	Bolt-Case, Bearing
140	115-4108	1	Main Bearing Case ASM
145	98-9524	1	Metal-Crankshaft (STD Set)
150	98-9484	2	Bolt-Case, Bearing

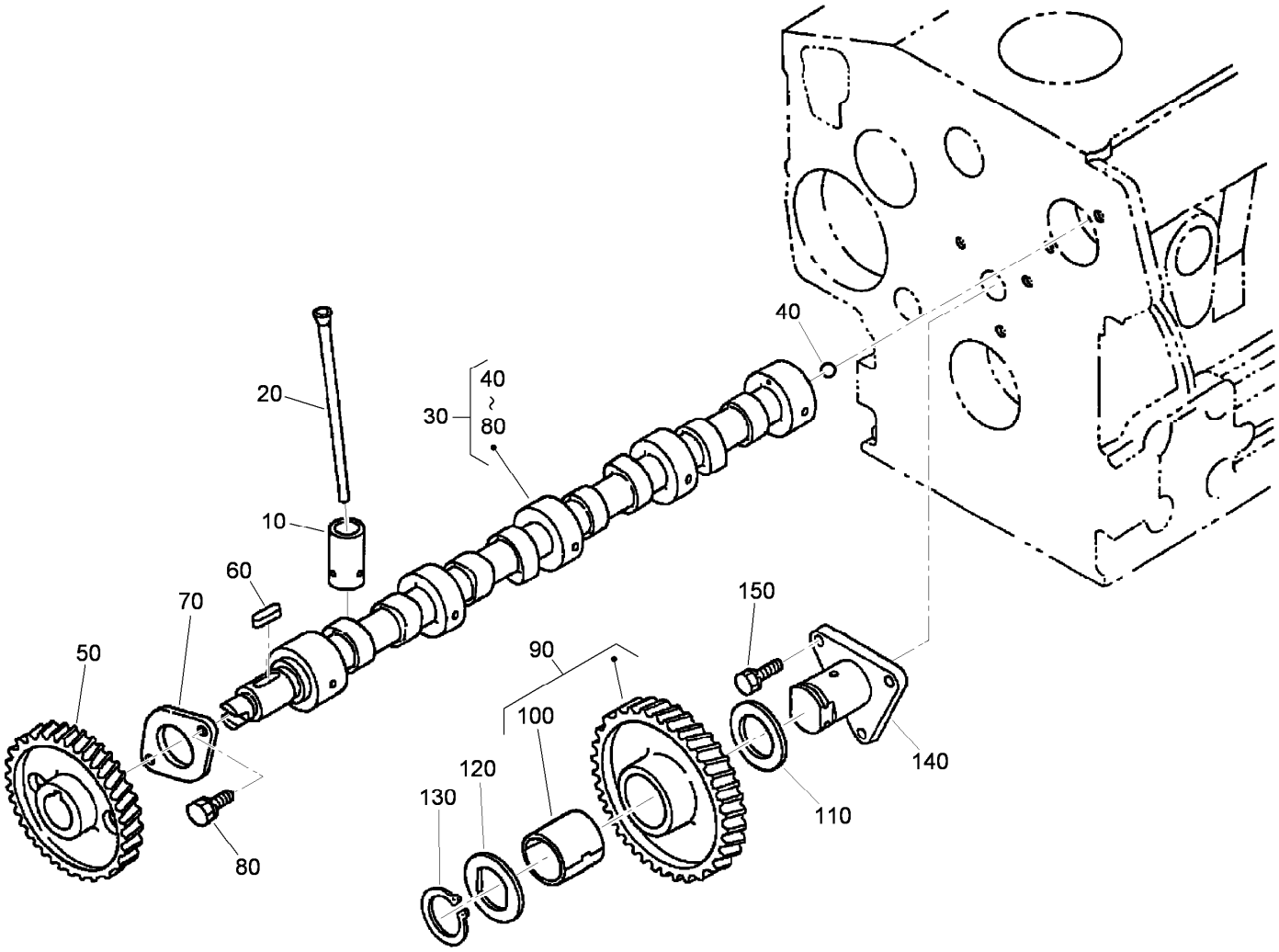

Cam Shaft and Idle Gear Assembly

Ref.	*Part Number*	*Qty.*	*Description*
10	112-0185	8	Tappet
20	98-9509	8	Rod-Push
30	120-3116	1	Camshaft ASM
40	110-3729	1	Ball
50	98-9512	1	Gear-Cam
60	98-9378	1	Key-Feather
70	98-9510	1	Stopper-Camshaft
80	98-7692	2	Bolt
90	117-7584	1	Idler Gear ASM
100	117-7585	1	Bushing-Gear, Idle
110	98-9535	1	Collar-Gear, Idle
120	98-9536	1	Collar-Gear, Idle
130	98-9534	1	Circlip-Gear, Idle
140	98-9533	1	Shaft-Gear, Idle
150	98-7692	3	Bolt

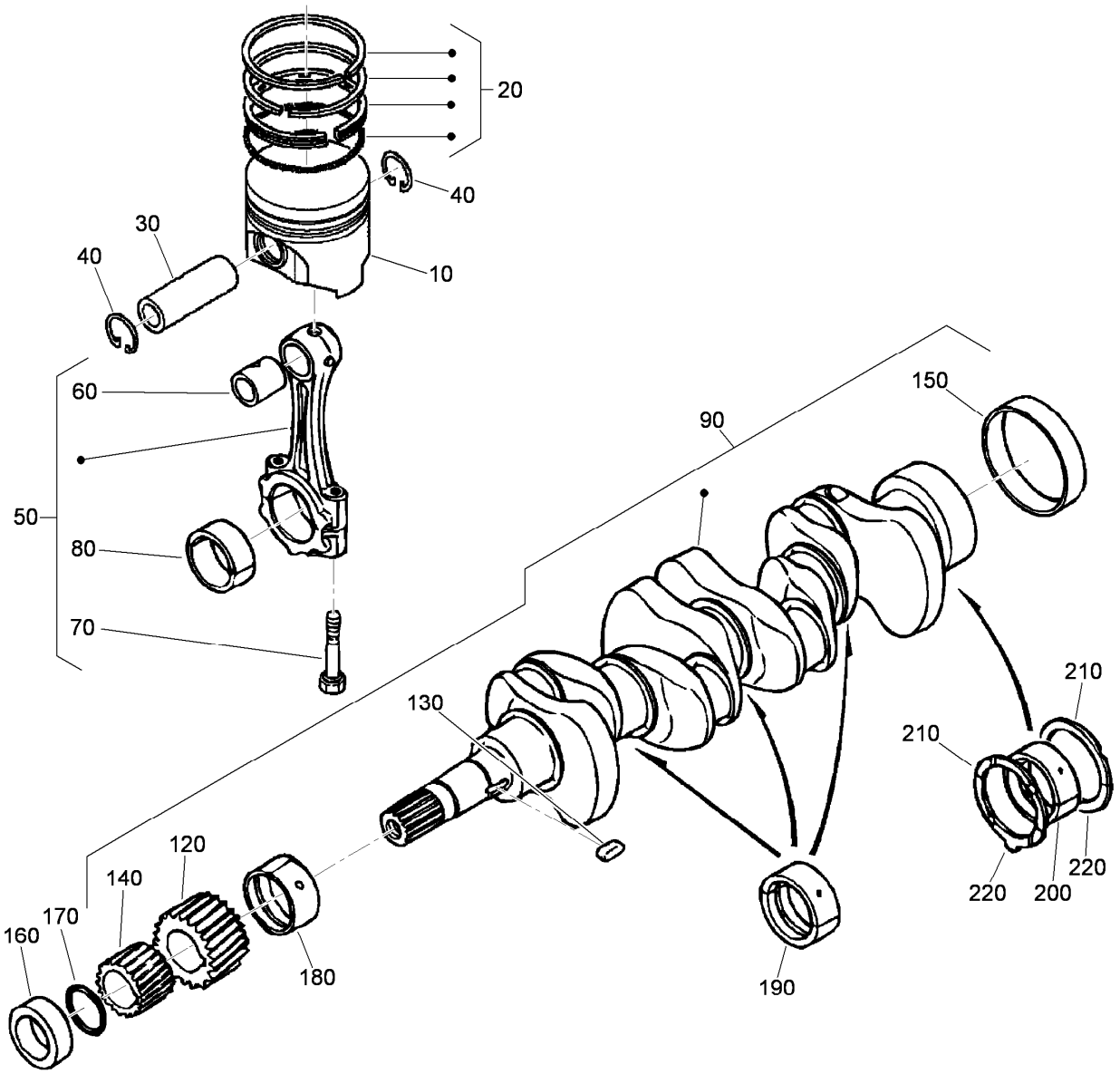

Piston and Crankshaft Assembly

Ref.	Part Number	Qty.	Description
10	112-8404	4	Piston (STD)
10	112-8414	4	Piston (+0.5Mm)
20	98-9551	4	Piston Ring ASM (STD)
20	108-1404	4	Piston Ring ASM (+0.5Mm)
30	98-9513	4	Pin-Piston
40	98-9514	8	Circlip-Pin, Piston
50	117-7586	4	Connecting Rod ASM
60	115-3014	4	Bushing-Pin, Piston
70	98-9517	8	Bolt-Rod, Connecting
80	98-9520	4	Bearing-Rod (0.4Mm)
80	98-9519	4	Bearing-Rod (-0.2Mm)
80	98-9518	4	Metal-Crankpin (STD)
90	120-2561	1	Crankshaft ASM
120	117-7561	1	Gear-Crankshaft
130	98-9666	1	Key
140	98-9542	1	Gear-Drive, Oil Pump
150	98-9522	1	Sleeve-Crankshaft

Ref.	Part Number	Qty.	Description
160	98-9521	1	Collar-Crankshaft
170	105-3783	1	O-Ring
180	98-9523	1	Metal Crankshaft (STD)
180	98-9528	1	Bearing-Main (-0.2Mm)
180	98-9529	1	Bearing-Main (0.4Mm)
190	98-9524	3	Metal-Crankshaft (STD Set)
190	98-9530	3	Bearing-Main (0.2Mm)
190	98-9531	3	Bearing-Main (0.4Mm)
200	115-4121	1	Metal-Crankshaft (STD)
200	112-7039	1	Metal-Crankshaft (0.2Mm)
200	112-7040	1	Metal-Crankshaft (-0.4Mm)
210	98-9413	2	Bearing-Thrust (STD)
210	98-9414	2	Bearing-Thrust (0.2Mm)
210	98-9415	2	Bearing-Thrust (0.4Mm)
220	98-9688	2	Bearing-Thrust (STD)
220	98-9689	2	Bearing-Thrust (0.2Mm)
220	98-9690	2	Bearing-Thrust (0.4Mm)

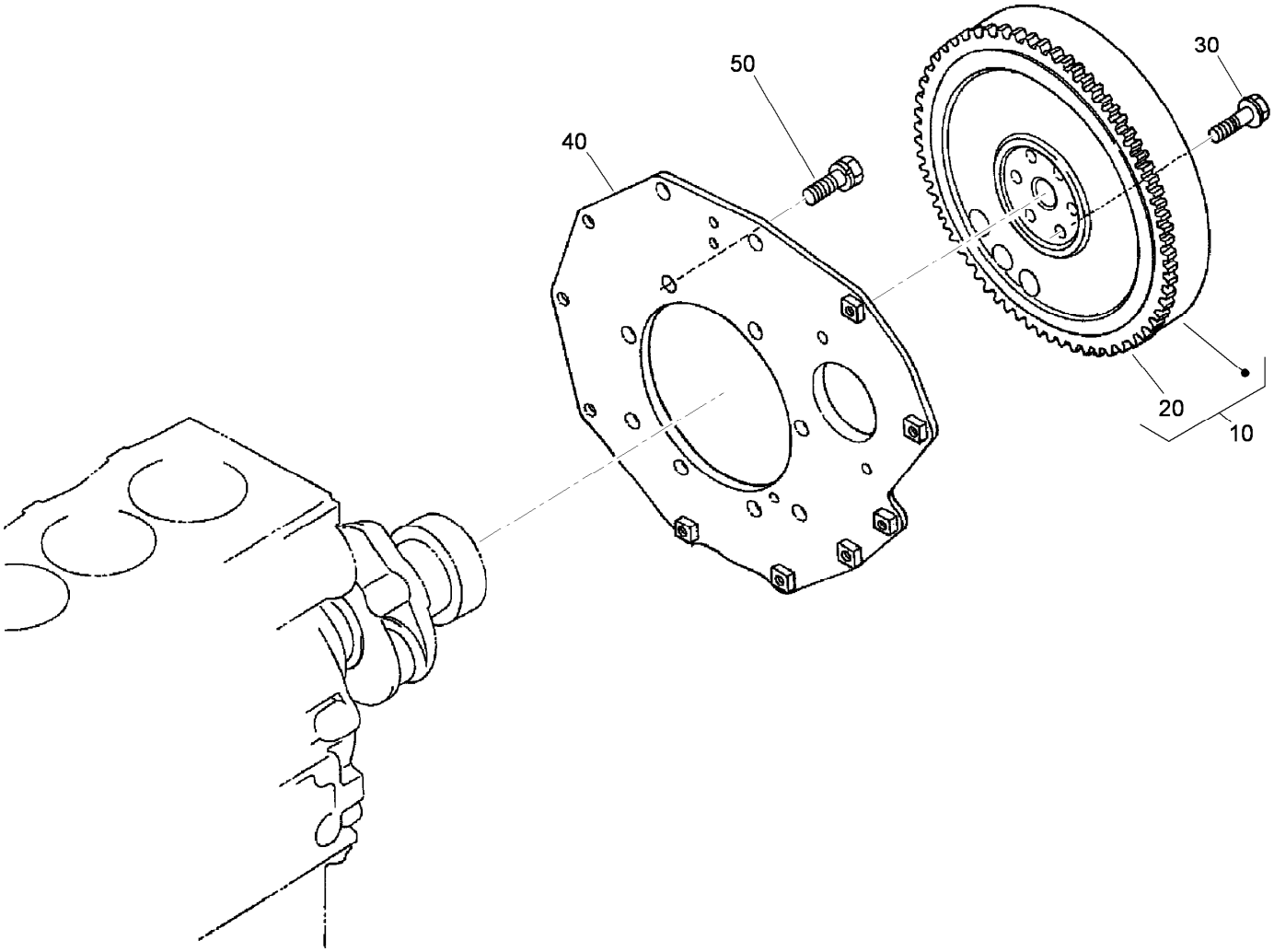

Flywheel Assembly

Ref.	Part Number	Qty.	Description
10	105-3721	1	Flywheel ASM
20	115-3015	1	Gear-Ring
30	98-9537	6	Bolt-Flywheel
40	98-9486	1	Plate-End, Rear
50	98-9392	8	Bolt

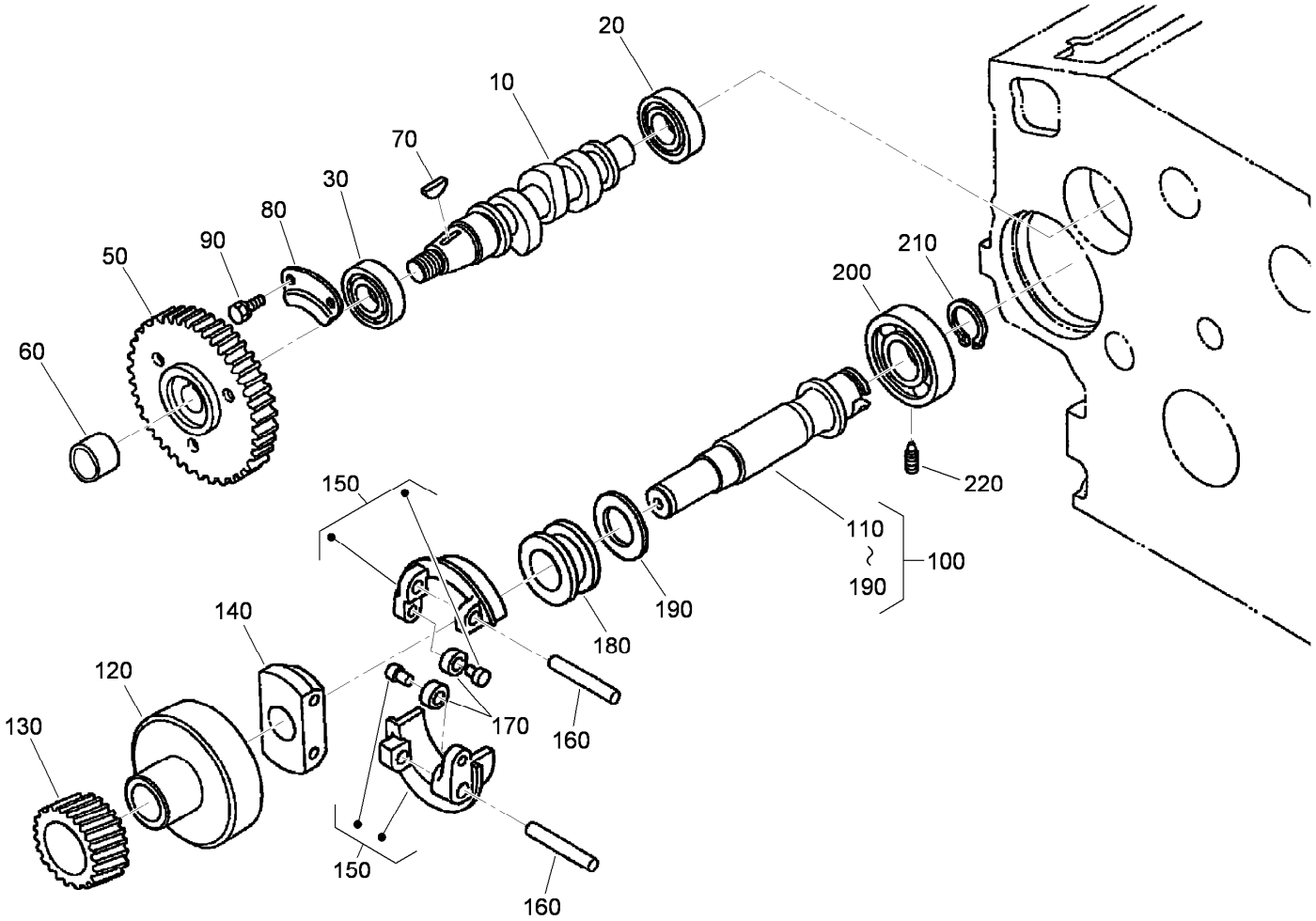

Fuel Camshaft and Governor Shaft Assembly

Ref.	Part Number	Qty.	Description
10	105-3723	1	Camshaft-Fuel
20	107-9077	1	Bearing-Ball
30	107-9078	1	Bearing-Ball
50	120-2562	1	Gear-Pump, Injection
60	98-9590	1	Nut-Cap
70	98-9595	1	Key-Woodruff
80	98-9511	1	Stopper-Fuel, Camshaft
90	98-7692	2	Bolt
100	105-3724	1	Governor Shaft ASM
110	105-3725	1	Shaft-Governor
120	98-9562	1	Holder-Gear, Governor

Ref.	Part Number	Qty.	Description
130	98-9673	1	Gear-Governor
140	98-9561	1	Holder-Weight, Governor
150	98-9559	2	Governor Weight ASM
160	98-9560	2	Shaft-Weight, Governor
170	98-9692	2	Roller
180	98-9563	1	Sleeve-Governor
190	98-9564	1	Washer-Thrust
200	107-9079	1	Bearing-Ball
210	98-9657	1	Circlip-Shaft, Governor
220	98-9565	1	Screw-Set

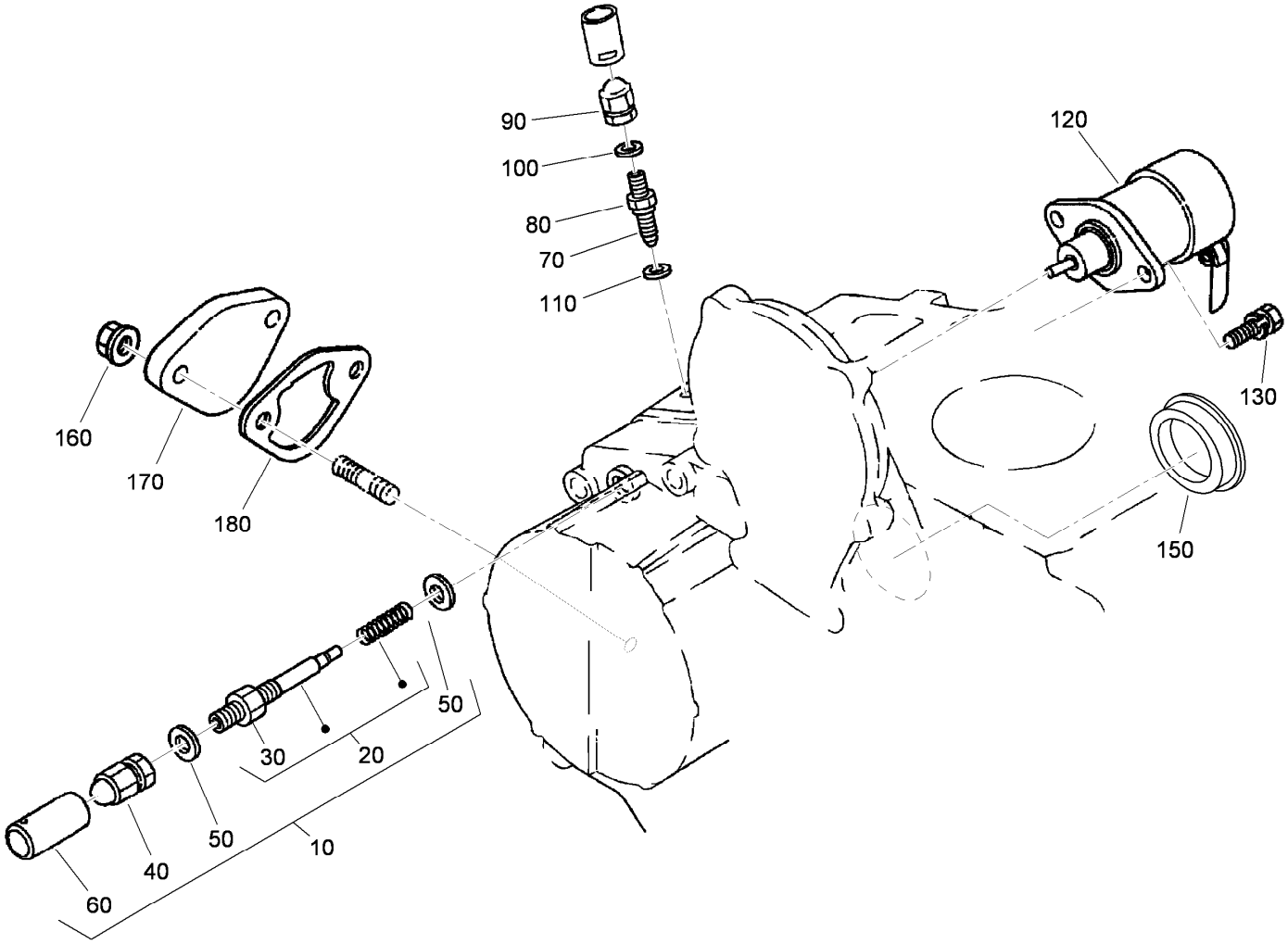

Idle Apparatus Assembly

Ref.	Part Number	Qty.	Description
10	98-9678	1	Idle Apparatus ASM
20	112-7014	1	Adjusting Bolt ASM
30	98-9439	1	Nut
40	112-0181	1	Nut
50	98-7654	2	Gasket
60	98-7656	1	Cap
70	112-7015	1	Bolt-Adjusting
80	100-2175	1	Nut-Lock
90	112-0181	1	Nut

Ref.	Part Number	Qty.	Description
100	98-7654	1	Gasket
110	107-9081	1	Gasket
120	104-5155	1	Solenoid-Stop
130	115-3039	2	Bolt-HSH
150	112-7016	1	Cover-Pump
160	100-2203	2	Nut-Flange
170	99-3514	1	Cover
180	98-9636	1	Gasket-Pump, Fuel

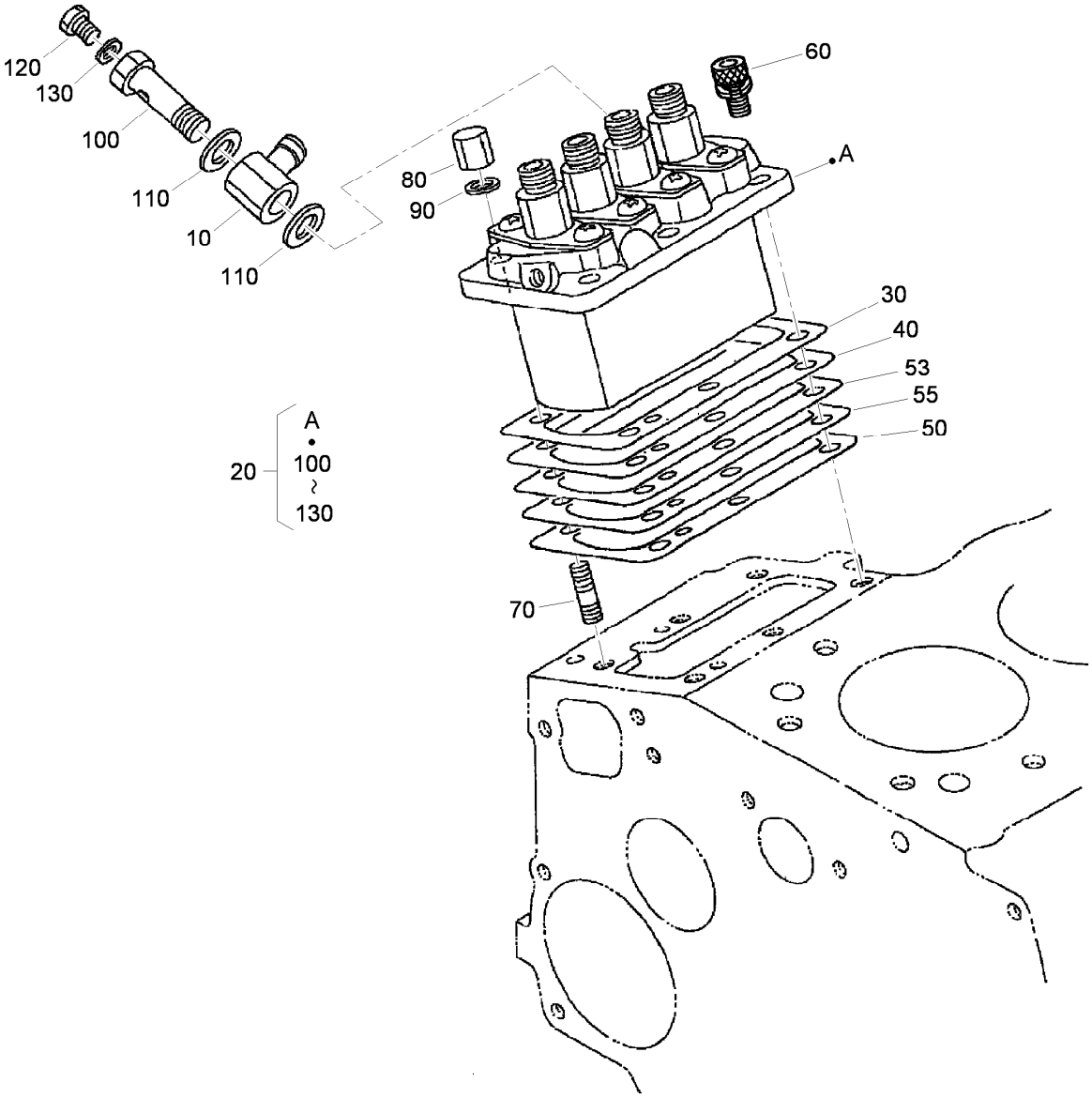

Injection Pump Assembly

Ref.	Part Number	Qty.	Description
10	98-9596	1	Joint-Eye
20	105-3727	1	Injection Pump ASM
30	105-3728	1	Shim-Pump, Injection (.20Mm)
40	105-3729	1	Shim-Pump, Injection (.25Mm)
50	105-3730	1	Shim-Pump, Injection (.30Mm)
53	115-3016	1	Shim-Pump, Injection (.350Mm)
55	115-3017	1	Shim-Pump, Injection (.175Mm)
60	117-7564	3	Bolt-Hex Soc HD
70	98-9438	3	Stud
80	98-9440	3	Nut-Cap
90	98-7699	6	Washer-Spring
100	98-9464	1	Bolt-Joint
110	98-9445	2	Gasket
120	98-9430	1	Screw
130	98-9446	1	Gasket

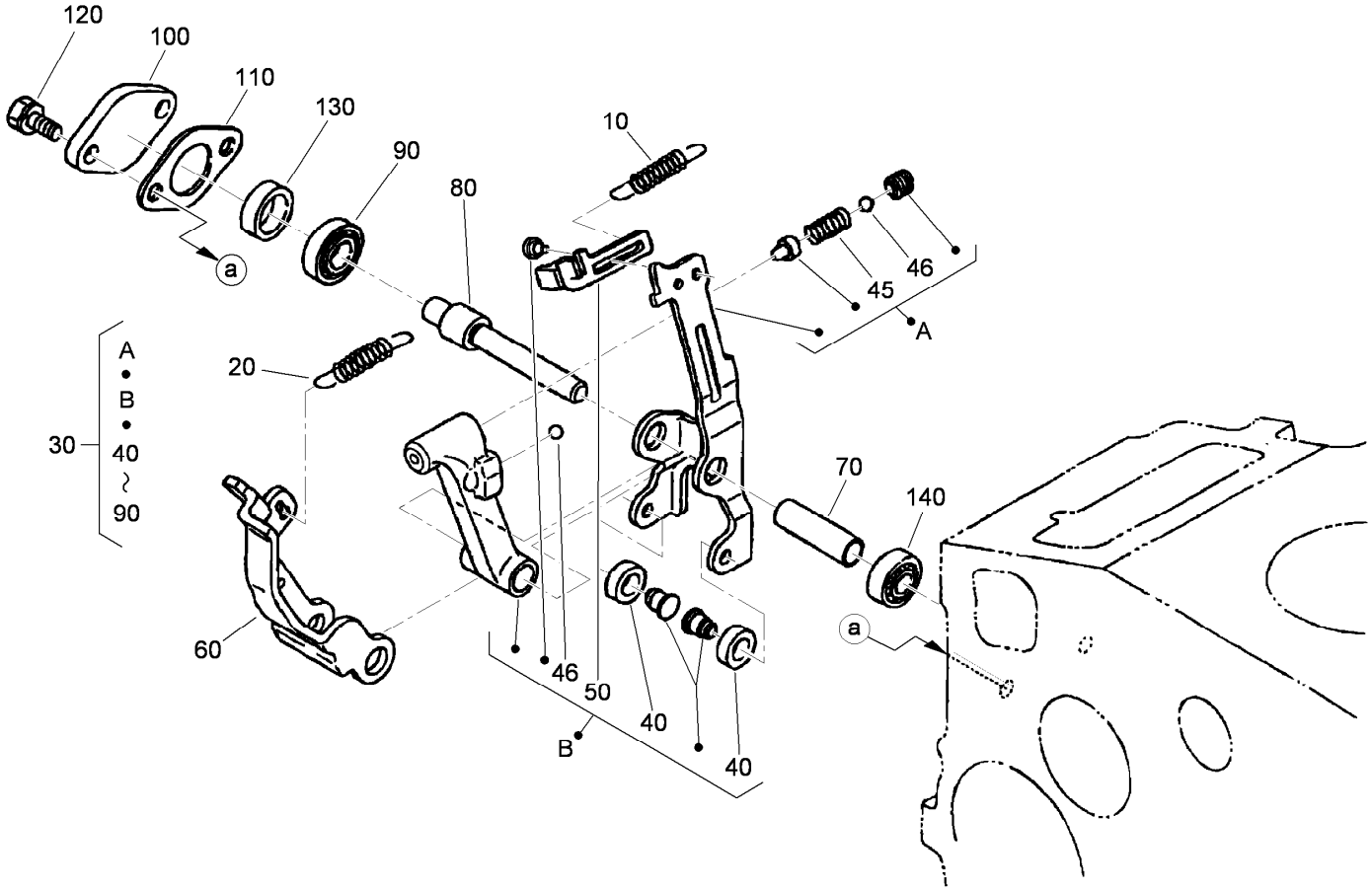

Governor Assembly

Ref.	Part Number	Qty.	Description
10	105-3741	1	Spring-Start
20	98-9681	1	Spring-Governor
30	115-4502	1	Fork Lever ASM
40	98-9692	2	Roller
45	108-2867	1	Spring
46	98-7580	2	Ball
50	107-9083	1	Lever-Thrust
60	107-9084	1	Lever-Fork

Ref.	Part Number	Qty.	Description
70	107-9085	1	Shaft-Lever, Fork
80	107-9086	1	Shaft-Lever, Fork
90	98-9570	1	Bearing-Miniaturize
100	115-4122	1	Cover-Shaft, Fork Lever
110	98-9682	1	Gasket
120	98-9350	2	Bolt
130	98-9567	1	Collar
140	98-9571	1	Bearing-Miniaturize

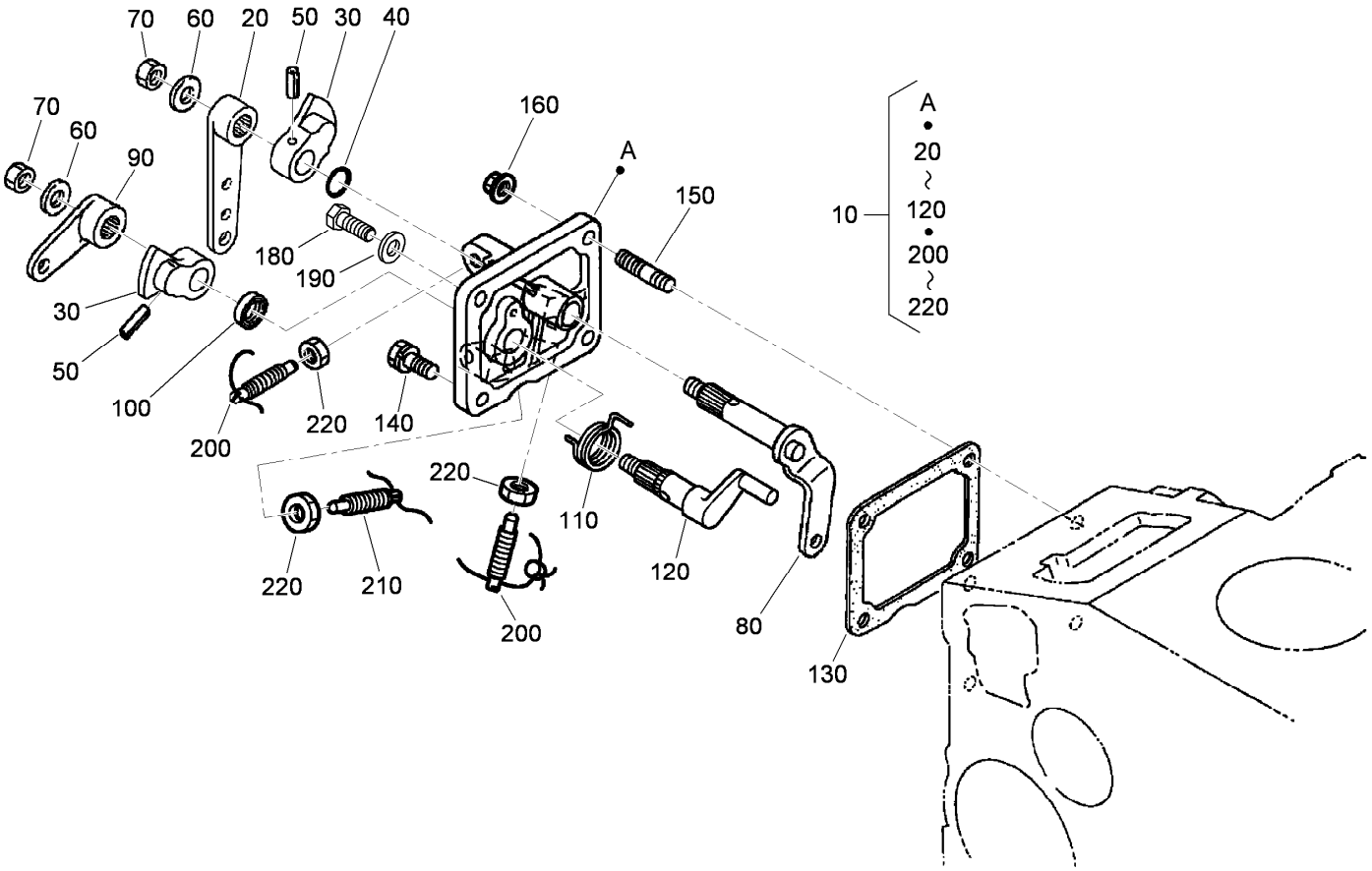

Speed Control Plate Assembly

Ref.	Part Number	Qty.	Description
10	105-3735	1	Control Plate ASM
20	98-9662	1	Lever-Control, Speed
30	98-9572	2	Lever-Control, Speed
40	105-3788	1	O-Ring
50	98-7602	2	Pin-Spring
60	98-9594	2	Washer-Plain
70	98-9589	2	Nut
80	98-9658	1	Governor Lever ASM
90	98-9663	1	Lever-Stop, Engine
100	98-7601	1	Seal-Oil
110	98-9472	1	Spring-Return

Ref.	Part Number	Qty.	Description
120	98-9664	1	Shaft-Lever, Stop
130	98-9637	1	Gasket
140	98-7692	1	Bolt
150	105-3710	1	Stud
160	98-7572	2	Nut
180	99-8348	2	Bolt
190	98-7654	2	Gasket
200	117-7565	2	Bolt-Adjusting
210	117-7566	1	Bolt-Adjusting
220	98-7572	3	Nut

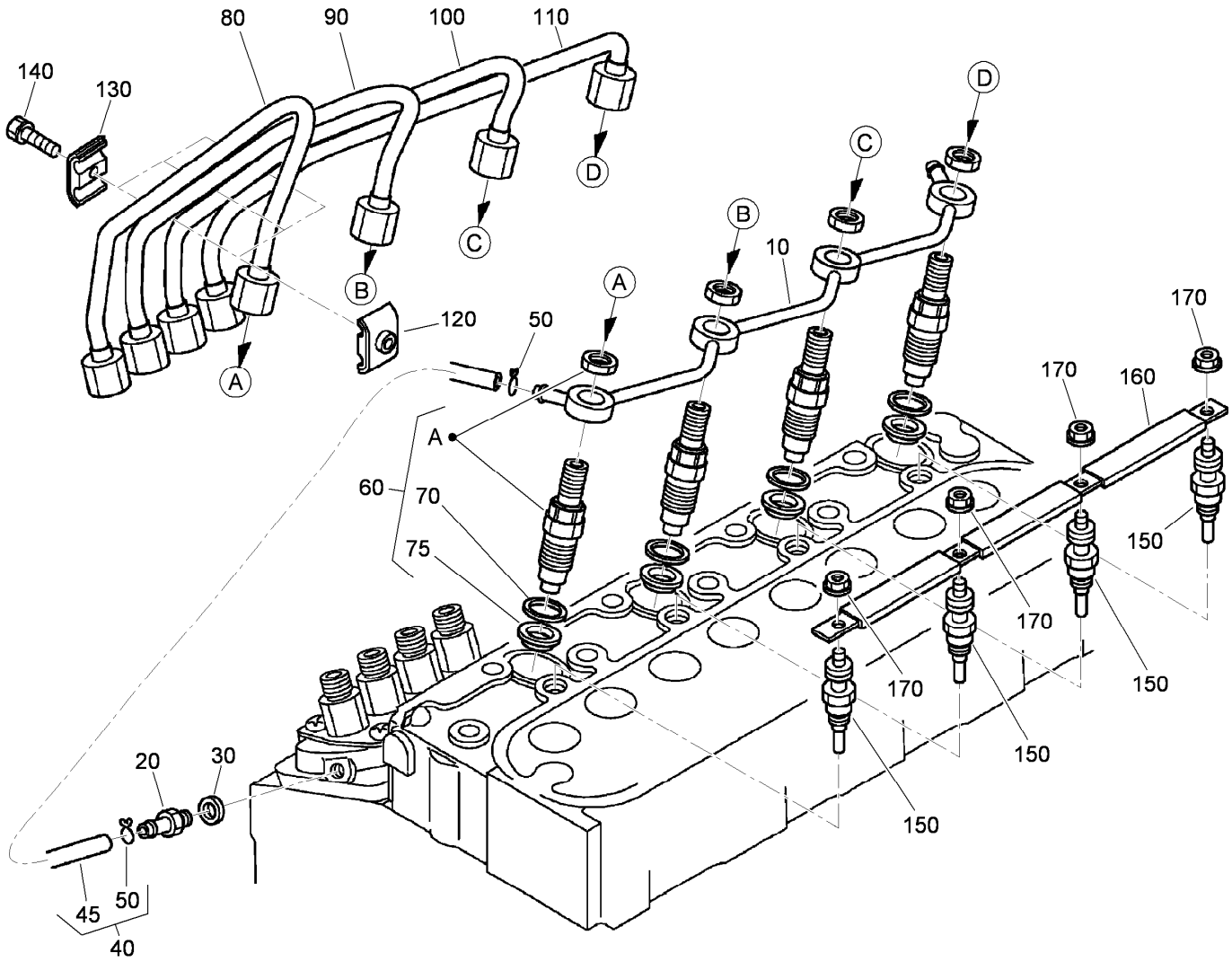

Nozzle Holder and Glow Plug Assembly

Ref.	Part Number	Qty.	Description
10	105-3737	1	Over Flow Pipe ASM
20	98-9431	1	Screw-Bleeder, Air
30	98-7654	1	Gasket
40	98-9420	1	Overflow Pipe ASM
45	112-0182	1	Pipe-Overflow
50	98-7671	2	Clip-Pipe
60	115-3018	4	Nozzle Holder Kit
70	98-7676	4	Gasket
75	98-7677	4	Seal-Heat
80	98-9653	1	Pipe-Injection

Ref.	Part Number	Qty.	Description
90	98-9654	1	Pipe-Injection
100	98-9655	1	Pipe-Injection
110	105-3738	1	Pipe-Injection
120	98-7682	3	Clamp-Pipe
130	98-7683	3	Clamp-Pipe
140	98-7684	3	Screw (W/Washer)
150	115-3019	4	Plug-Glow
160	105-3739	1	Cord-Plug, Glow
170	99-8377	4	Nut-Flange

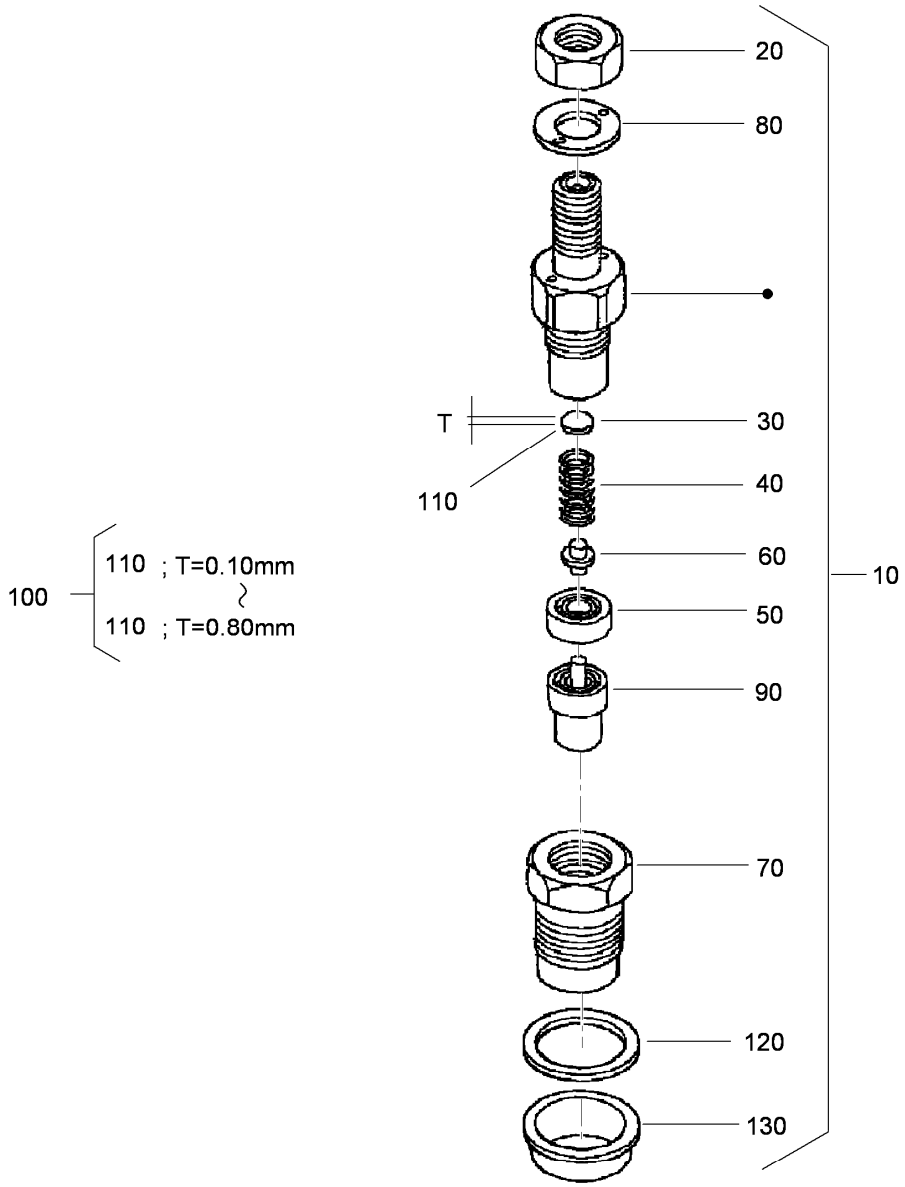

Nozzle Holder Component Assembly

Ref.	Part Number	Qty.	Description
10	115-3018	4	Nozzle Holder Kit
20	99-8301	4	Nut
30	99-8302	4	Washer-Adjusting
40	99-8303	4	Spring-Nozzle
50	99-8304	4	Spacer-Distance
60	99-8305	4	Rod-Push
70	99-8306	4	Nut-Nozzle
80	99-8307	4	Washer-Plain
90	115-3020	4	Piece-Nozzle
100	99-8309	4	Adjusting Washer ASM
110	99-8310	4	Washer-Adjust (0.10Mm)

Ref.	Part Number	Qty.	Description
110	99-8311	4	Washer-Adjust (0.20Mm)
110	99-8312	4	Washer-Adjust (0.30Mm)
110	99-8313	4	Washer-Adjust (0.40Mm)
110	99-8314	4	Washer-Adjust (0.50Mm)
110	99-8315	4	Washer-Adjust (0.52Mm)
110	99-8316	4	Washer-Adjust (0.54Mm)
110	99-8317	4	Washer-Adjust (0.56Mm)
110	99-8318	4	Washer-Adjust (0.58Mm)
110	99-8319	4	Washer-Adjust (0.80Mm)
120	98-7676	4	Gasket
130	98-7677	4	Seal-Heat

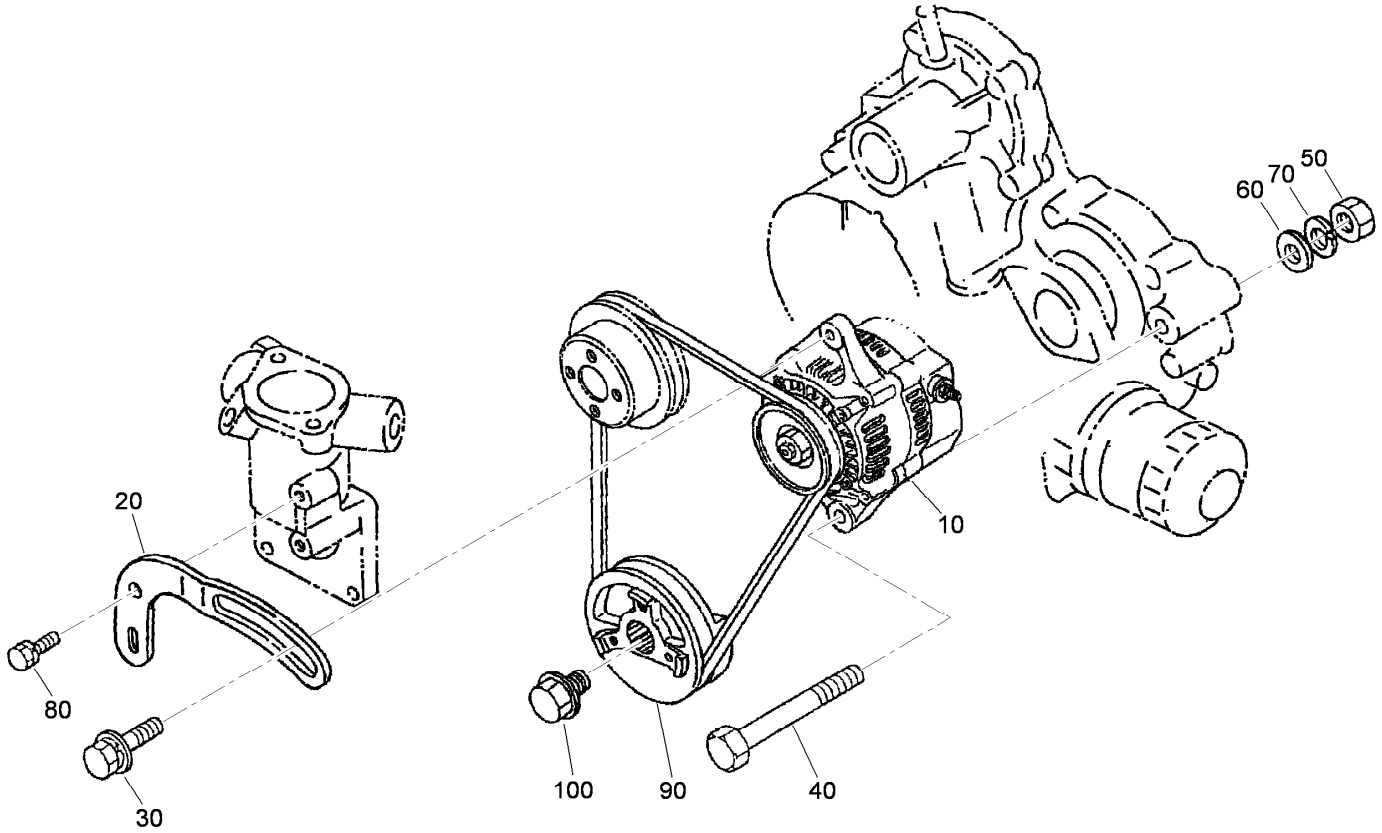

Alternator and Pulley Assembly

Ref.	*Part Number*	*Qty.*	*Description*
10	117-5541	1	60 Amp Alternator ASM
20	117-5542	1	Bracket
30	108-7088	1	Bolt
40	98-9360	1	Bolt
50	98-7737	1	Nut
60	98-7696	1	Washer-Plain
70	98-7738	1	Washer-Spring
80	98-7692	1	Bolt
90	105-3745	1	Pulley-Drive, Fan
100	98-9585	1	Bolt

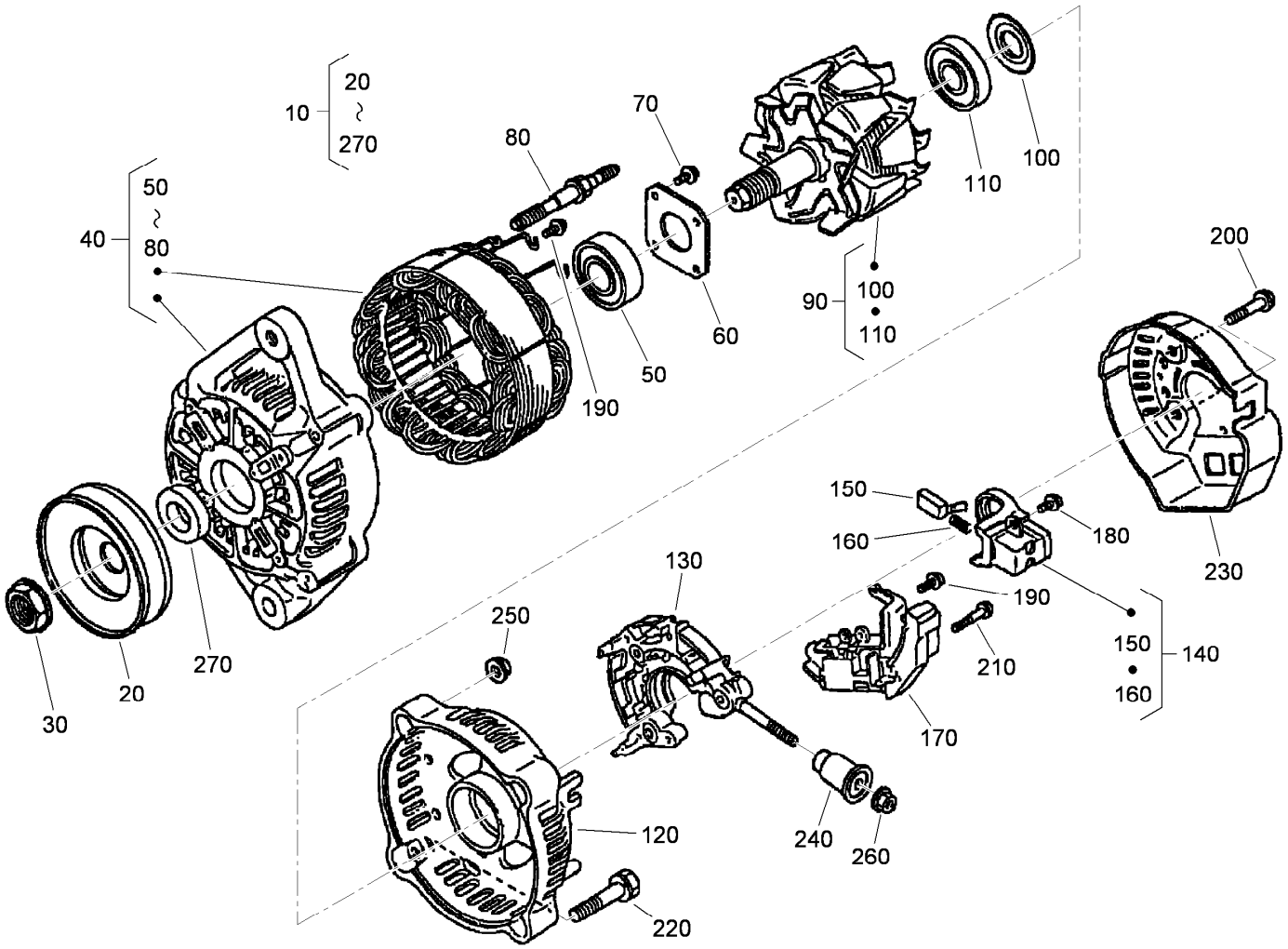

Alternator Components

Ref.	Part Number	Qty.	Description
10	117-5541	1	60 Amp Alternator ASM
20	98-9453	1	Pulley-Dynamo
30	98-7708	1	Nut
40	117-0316	1	Drive End Frame ASM
50	107-0137	1	Bearing-Ball
60	98-7715	1	Plate-Retainer
70	98-7716	4	Screw-Head, Round
80	98-7717	2	Bolt-Through
90	117-0317	1	Rotor ASM
100	98-7711	1	Cover-Bearing
110	107-0138	1	Bearing-Ball
120	133-2813	1	Frame-End
130	117-0322	1	Holder
140	107-0141	1	Brush Holder ASM

Ref.	Part Number	Qty.	Description
150	98-7724	2	Brush
160	98-7725	2	Spring-Brush
170	117-0319	1	Regulator ASM
180	98-7728	1	Screw-Head, Round
190	98-7727	6	Screw-Head, Round
200	98-7729	3	Bolt
210	98-7726	2	Screw-Head, Round
220	98-7731	2	Bolt
230	117-0320	1	Cover-End
240	117-0321	1	Insulation-Brush
250	98-7730	2	Nut
260	98-7732	1	Nut
270	98-7709	1	Collar

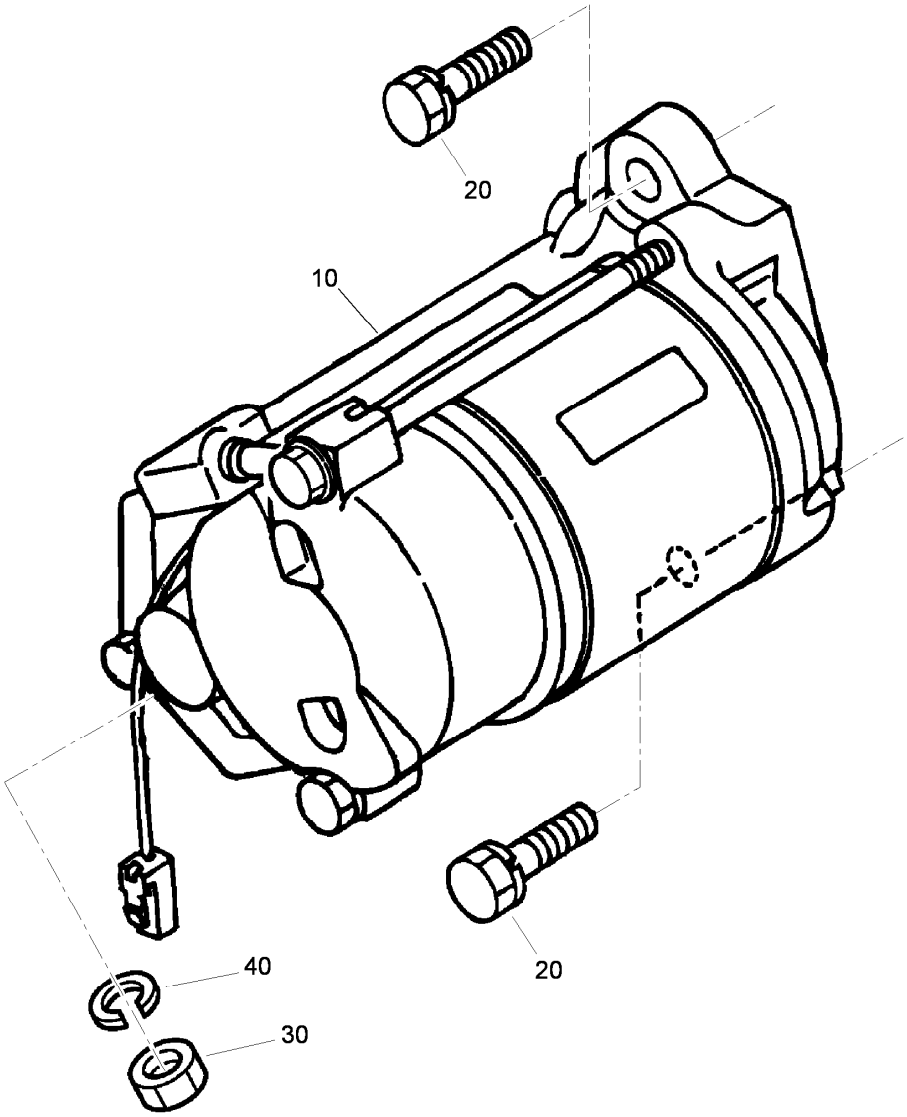

Starter Assembly

Ref.	Part Number	Qty.	Description
10	98-9705	1	Starter ASM
20	98-7697	2	Bolt
30	98-7739	1	Nut
40	105-2893	1	Washer-Spring

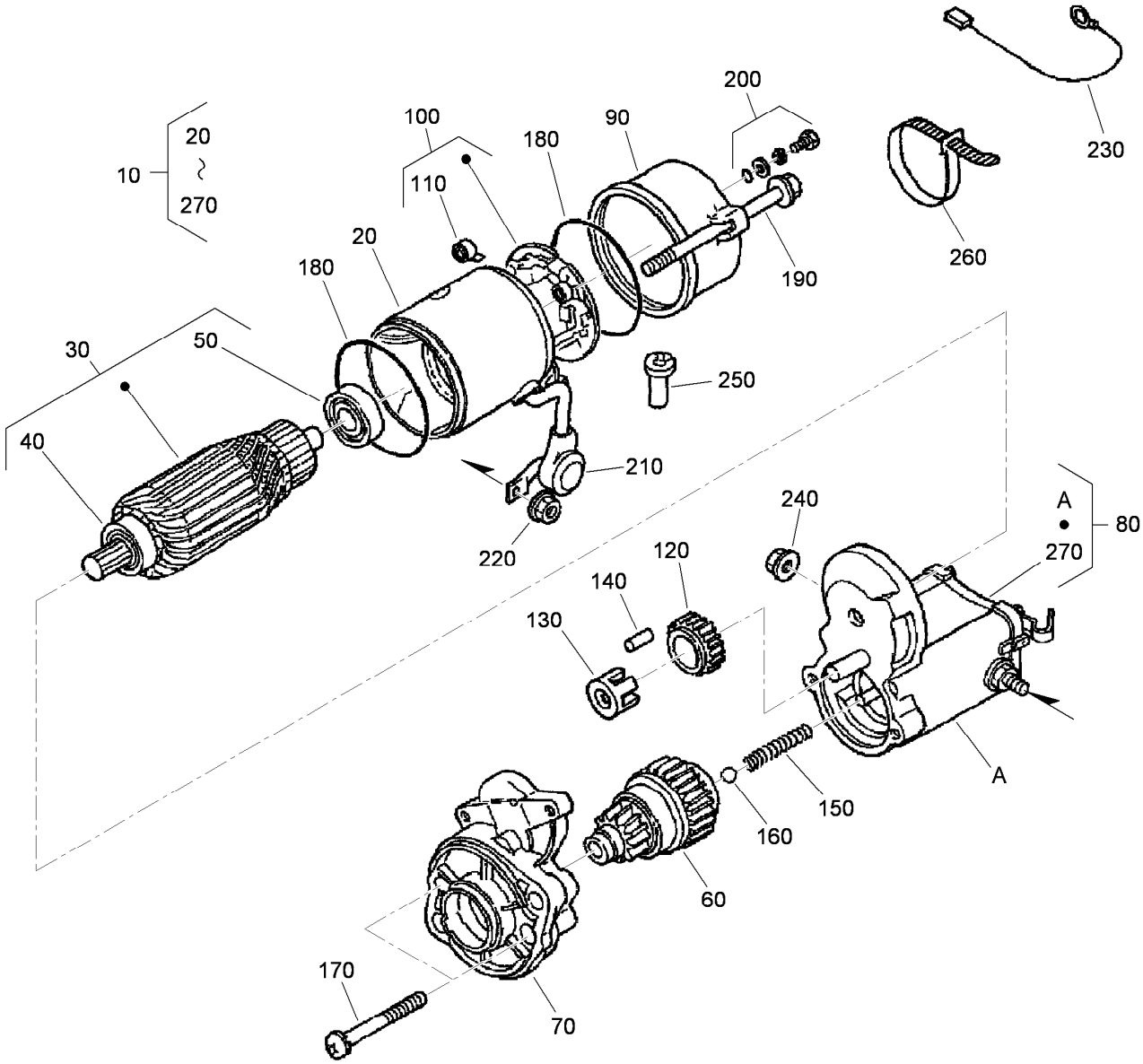

Starter (Component Part) Assembly

Ref.	Part Number	Qty.	Description
10	98-9705	1	Starter ASM
20	104-8608	1	Yoke ASM
30	98-7742	1	Armature ASM
40	98-7744	1	Bearing
50	98-7743	1	Bearing
60	99-8373	1	Clutch-Running, Over
70	99-8374	1	Frame-End, Drive
80	105-3746	1	Magnetic Switch ASM
90	98-7748	1	Frame-End
100	98-7749	1	Brush Holder ASM
110	98-7750	4	Spring-Brush
120	98-7751	1	Gear
130	98-7752	1	Retainer
140	98-7753	5	Roller

Ref.	Part Number	Qty.	Description
150	98-7754	1	Spring
160	98-7755	1	Ball
170	98-7756	2	Bolt
180	98-7757	2	O-Ring
190	100-9240	2	Bolt
200	98-7758	2	Bolt ASM
210	99-8375	1	Cover
220	99-8371	1	Nut-Hex
230	98-9711	1	Cord-Solenoid, Stop
240	99-8376	1	Nut-Hex
250	98-7759	1	Pipe-Drain
260	98-9712	1	Band-Cover
270	105-2886	1	Cover ASM

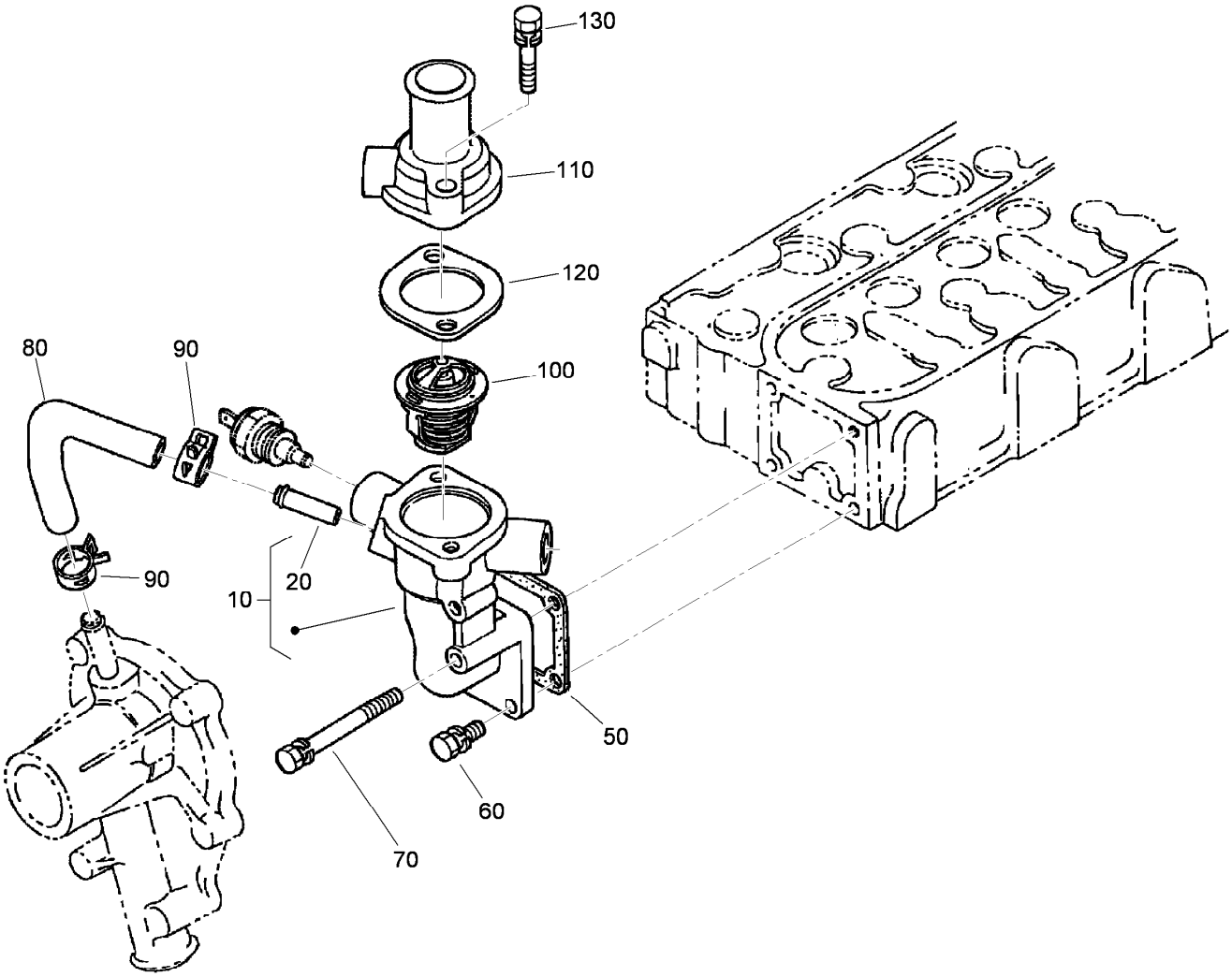

Water Flange Assembly

Ref.	Part Number	Qty.	Description
10	98-9713	1	Water Flange ASM
20	98-9580	1	Pipe-Return, Water
50	98-9638	1	Gasket-Flange, Water
60	98-7692	3	Bolt
70	98-9356	1	Bolt
80	98-9578	1	Pipe-Return, Water
90	98-9579	2	Band-Pipe
100	98-7778	1	Thermostat ASM
110	98-9471	1	Cover-Thermostat
120	105-3748	1	Gasket-Thermostat
130	98-7777	2	Bolt

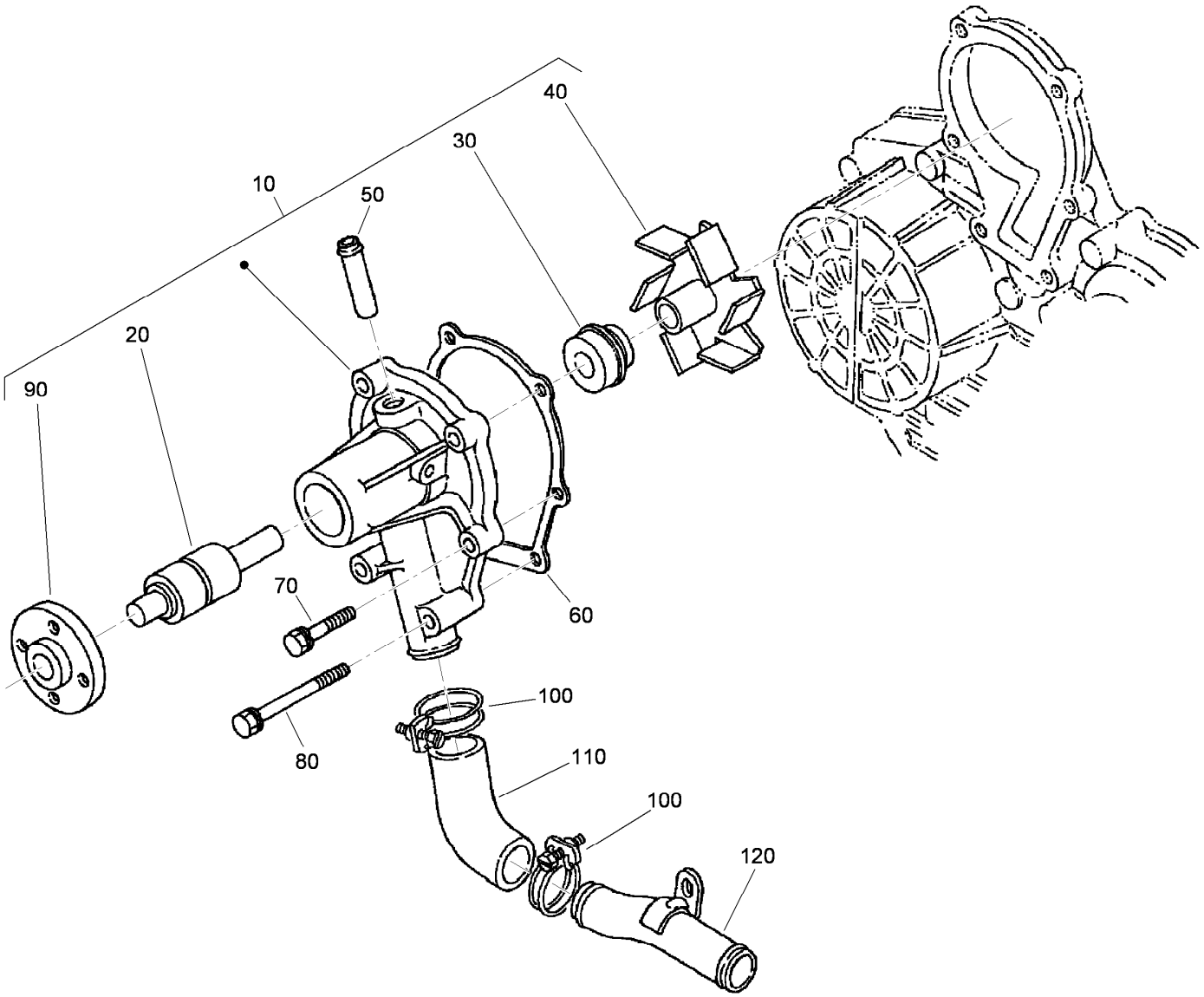

Water Pump Assembly

Ref.	Part Number	Qty.	Description
10	107-9089	1	Water Pump ASM
20	99-3517	1	Bearing-Pump, Water
30	105-3750	1	Mechanical Seal ASM
40	112-7017	1	Impeller-Pump, Water
50	100-1932	1	Pipe-Return, Water
60	99-3454	1	Gasket-Pump, Water
70	98-9353	4	Bolt
80	107-9090	2	Bolt
90	99-3516	1	Flange-Pump, Water
100	98-9717	2	Clamp
110	107-9091	1	Pipe-Water
120	98-9716	1	Pipe-Water

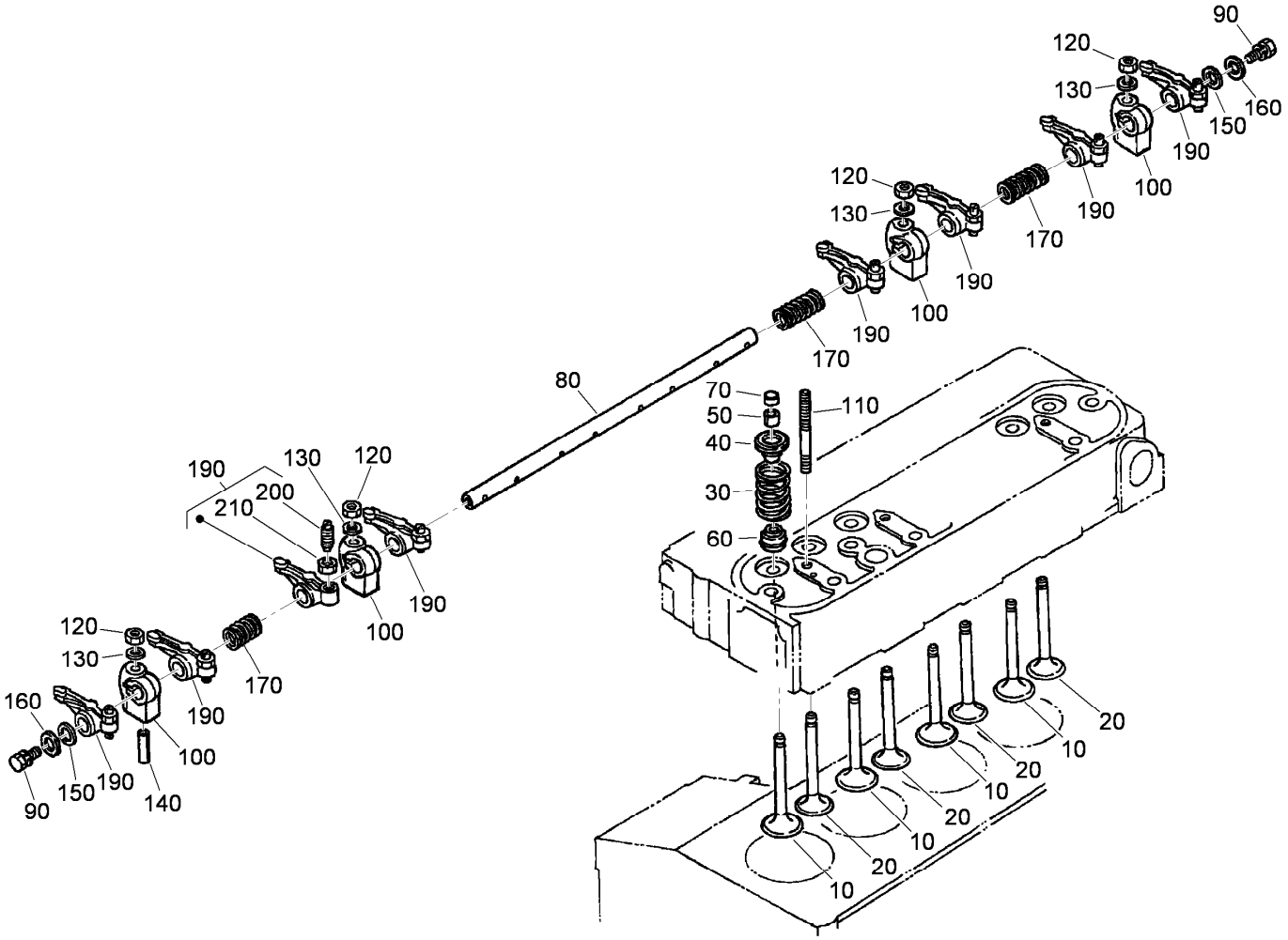

Valve and Rocker Arm Assembly

Ref.	Part Number	Qty.	Description
10	120-2563	4	Valve-Inlet
20	120-2564	4	Valve-Exhaust
30	98-9648	8	Spring-Valve
40	107-9092	8	Retainer-Spring
50	117-7572	8	Collet-Spring, Valve
60	99-8385	8	Seal-Stem, Valve
70	98-9497	8	Cap-Valve
80	105-3790	1	R-Arm Shaft ASM
90	100-9265	2	Bolt
100	98-9505	4	Bracket-Arm, Rocker

Ref.	Part Number	Qty.	Description
110	98-9506	4	Stud
120	98-9393	4	Nut
130	98-9385	4	Washer-Flat
140	105-3758	1	Pin-Spring
150	98-9507	2	Washer-Shaft, Rocker Arm
160	110-3832	2	Washer-Plain
170	98-9504	2	Spring-Arm, Rocker
190	112-7020	8	Rocker Arm ASM
200	98-9502	8	Screw-Adjusting
210	98-9503	8	Nut

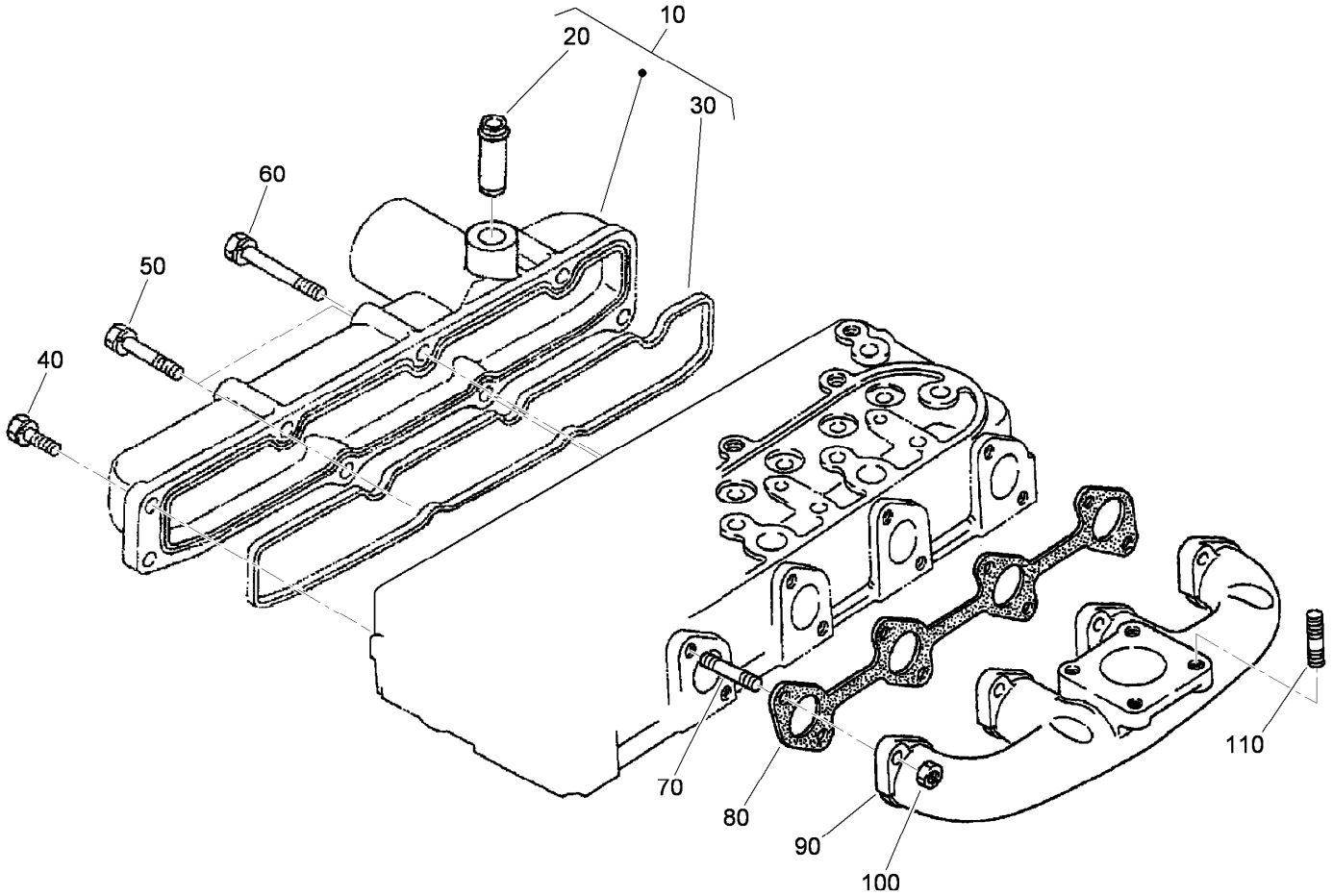

Intake and Exhaust Manifold Assembly

Ref.	*Part Number*	*Qty.*	*Description*
10	108-2874	1	Intake Manifold ASM
20	98-9492	1	Joint-Pipe, Breather
30	105-3760	1	Gasket-Manifold, Intake
40	98-7605	3	Bolt
50	98-9353	2	Bolt
60	105-3797	3	Bolt
70	98-9588	8	Stud
80	105-3765	1	Gasket-Manifold, Exhaust
90	112-0187	1	Manifold-Exhaust
100	98-9665	8	Nut
110	98-7769	4	Stud

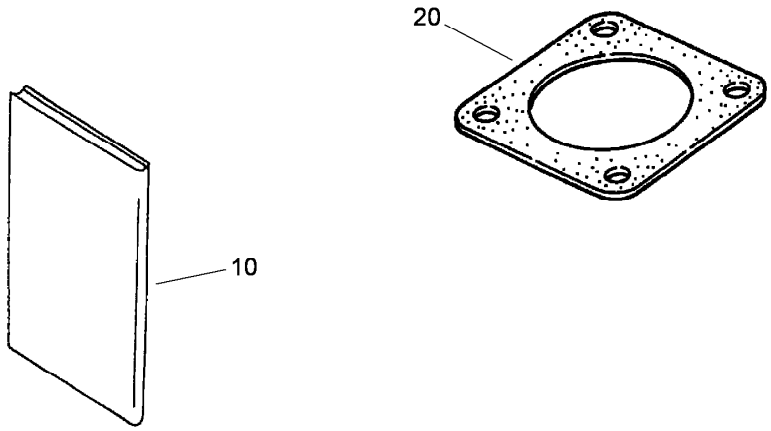

Muffler Gasket and Operator Manual

Ref.	*Part Number*	*Qty.*	*Description*
10	117-8836	1	Manual-Operator, Kubota
20	99-8343	1	Gasket-Muffler

Attachments and Accessories

For 31223 Groundsmaster 360 4-Wheel Drive Multi-Purpose Machine

Product Name	Model/Part
Green Diesel Cap	107-2172
Spark Arrestor	117-3281
400-hour Filter Maintenance Kit	30052
MVP Filter Kit	30261
48 Inch V-Plow	30750
Speed Reduction Kit, 2015 and After Groundsmaster 360 Multi-Purpose Machine	30287
Beacon Kit	120-0256
Electrical Accessory Kit	115-0019
Registration Plate Kit	120-6678
Jack Stand Kit	30579
Hitch Kit	130-8716
Quick Attach Front Frame	30509
V-Plow Mounting Kit	30378
Diagnostic Display Box	85-4750
Weight Transfer Kit	120-6683
Auxiliary Power Unit	120-6675
Winter Attachment Joystick Kit	31219
Premium Transmission/Hydraulic Tractor Fluid (55 Gallon Drum)	108-1183
Premium Transmission/Hydraulic Tractor Fluid (5 Gallon Pail)	108-1184
Winter Enclosure	31220
72in Side Discharge Deck	30481
Blade-Belt Kit, 72in Side Discharge Deck	105-7272
Premium Engine Oil 15w40 (55 Gallon Drum)	121-6394
Atomic Blade Kit (3 Blade Pack)	119-8020
Premium Engine Oil 15w40 (5 Gallon Pail)	121-6395
Blade-Rotary, Atomic (24.5in)	110-0624-03
Blade-Rotary, Medium Flow (24.5in)	110-0621-03
Leaf Mulching Kit	108-5273
Hardtop Sunshade	30359
72in Side Discharge Mower (CE)	30354
5in Air Cleaner Safety Element	114-4057
CE Kit, 72in Side Deck With French Guards	30679
High Lift Collection	30866
Carrier Frame Asm for High Lift Collection	30869
Hydraulic and Electrical Mounting Kit for High Lift Collection	30801
Parking Stand Kit for High Lift Collection	30818
Light Kit for High Lift Collection	30816
Controller Kit for High Lift Collection	30897
72in Guardian and Rear Discharge CE Mower Cover Kit	30685
72in Base Deck	30353
Blade-Belt Kit, 72in Guardian Only	105-7271
72in Guardian Recycler Completion Kit	30304
72in Guardian Fine Recycler Completion Kit	30346
Bahiagrass Baffle Kit	105-7269
Blade-Flat	112-9586-03
Hourmeter, Wireless Hourmeter System	115-4754

Attachments and Accessories (continued)

72in Rear Discharge Completion Kit 30549

CE Guard Kit, Groundsmaster 360 Multi-Purpose Machine 30689

Road Homologation Light Kit, Non-Cab Unit (Europe) 30512

Road Light Kit, Non Cab Unit (North America) 30513

Slow Moving Vehicle Sign Kit 115-0014

Locking Latch 98-9315

Grammer Seat with Air Ride Suspension 30511

Vinyl Backrest Extension Kit 120-0583

100in Rear Discharge Deck 31101

Adapter Kit, 100in Rear Discharge Mower for 2-Wheel Drive or 2013 and Before 4-Wheel Drive Groundsmaster 360 Traction Unit 31102

Adapter Kit, 100in Rear Discharge Deck for 2014 and After Groundsmaster 360 4-Wheel Drive Traction Unit 31103

Leaf Mulching Kit for 100in Rear Discharge Deck 31105

100in CE Mower Cover Kit 30687

Standard Blade Kit for 100in Rear Discharge Deck 131-3364

Blade-Combination (19in) 106-7166-03

Blade-combination (25.18in) 125-9444-03

Notes:

TORO®

Count on it.