Form No. 3410-235 Rev A

Skid Kit

Reelmaster® 3000, 5000, or 7000 Series Traction Unit with Universal Groomer

Model No. 133-9171

Installation Instructions

⚠ WARNING

CALIFORNIA
Proposition 65 Warning

This product contains a chemical or chemicals known to the State of California to cause cancer, birth defects, or reproductive harm.

Installing the Kit

1. Park the machine on a level surface, lower the cutting units, engage the parking brake, shut off the engine, and remove the key from the ignition switch.
2. On the left side of the cutting unit, use the cap screw, flange nut, and washer to locate the left skid on the left HOC bracket assembly (Figure 1).

   Note: Tighten the cap screw to lock the front roller into the HOC bracket. Tighten the flange nut to secure the skid.

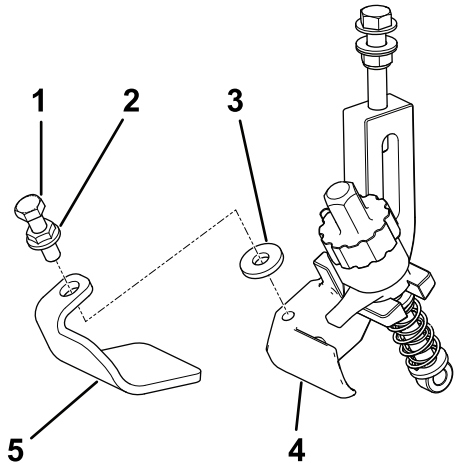

Figure 1
Left side

1. Cap screw
2. Flange nut
3. Washer
4. Left skid
5. Left HOC bracket assembly

3. On the right side of the cutting unit, use the cap screw, flange nut, and washer to locate the left skid on the right HOC bracket assembly (Figure 2).

Note: Tighten the cap screw to lock the front roller into the HOC bracket. Tighten the flange nut to secure the skid.

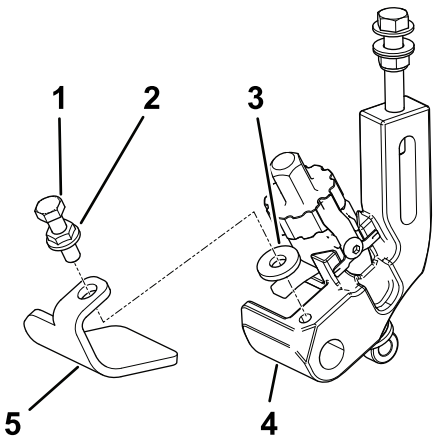

Figure 2
Right side

1. Cap screw
2. Flange nut
3. Washer
4. Right skid
5. Right HOC bracket assembly

© 2016—The Toro® Company
8111 Lyndale Avenue South
Bloomington, MN 55420

Register at www.Toro.com.

CE

Original Instructions (EN)
Printed in the USA
All Rights Reserved

3410-235 A