Form No. 3410-272 Rev A

TORO®

Count on it.

Parts Catalog

Skid Kit

Reelmaster® 3000, 5000, or 7000 Series Traction Unit with Universal Groomer

Model No. 133-9171

Register at www.Toro.com.
Original Instructions (EN)

CE

3410-272 A

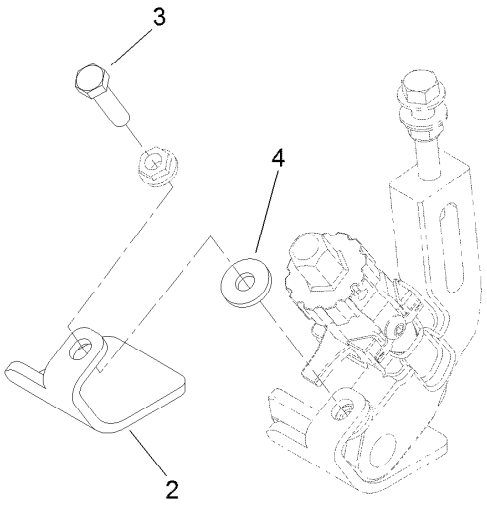

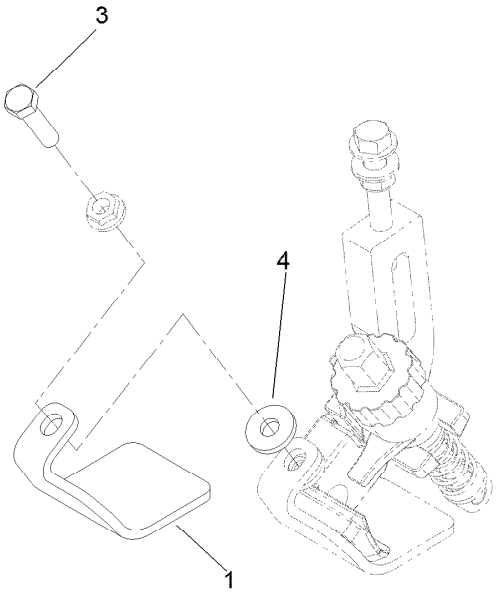

Skid Assembly No. 133-9171

Ref.	*Part Number*	*Qty.*	*Description*
1	133-9145-03	1	Bumper-Groomer, LH
2	133-9146-03	1	Bumper-Groomer, RH
3	119-3626	2	Screw-HH
4	4-2390	2	Washer-Flat