Form No. 3410-340 Rev A

Deluxe PVC or Fabric Seat Kit

T4240, CT2240, LT-F3000, LT3240, LT3340, R3240T, or Groundsmaster® 3400 Traction Unit

Model No. 02865—Serial No. 316000001 and Up

Model No. 02866—Serial No. 316000001 and Up

Installation Instructions

⚠ WARNING

CALIFORNIA
Proposition 65 Warning

This product contains a chemical or chemicals known to the State of California to cause cancer, birth defects, or reproductive harm.

This kit is a deluxe seat that provides the machine operator seating comfort and safety.

Installation

Loose Parts

Use the chart below to verify that all parts have been shipped.

Procedure	Description	Qty.	Use
1	No parts required	–	Prepare the machine.
2	No parts required	–	Remove the seat.
3	Seat	1	Prepare the new seat.
4	Washer (8 x 17 mm) Cap screw (8 x 40 mm) Nut—plain (8 mm) Washer (5/16 x 1) Locknut (8 mm) Cap screw (8 x 25 mm)	10 4 4 2 4 4	Install the seat.
5	2-Way connector kit (recpt) Relay and harness assembly (Model 02750) Wire harness—350 cm (137-3/4 inches—Model 02750) Wire harness—400 cm (157-1/2 inches—Models 30651, 30654, 30657, and 30659) Fuse (10 A)	1 1 1 1 1	Connect the electrical components.
6	No parts required	–	Complete the seat kit installation.

© 2016—The Toro® Company
8111 Lyndale Avenue South
Bloomington, MN 55420

Register at www.Toro.com.

CE

Original Instructions (EN)
Printed in the USA
All Rights Reserved

3410-340 A

1

Preparing to Install the Seat Kit

No Parts Required

Preparing the Machine

1. Park the machine on a level surface.
2. Shut off the mower cutting units.
3. Raise the cutting units.
4. Latch the cutting units, if applicable.
5. Engage the parking brake, shut off the engine, and wait for all moving parts to stop.
6. Remove the key from the key switch.

Raising the Operator's Platform (Model 02750)

1. Rotate the 2 quarter-turn-fasteners that secure the battery cover to the operator's platform counterclockwise, and remove the cover (Figure 1).

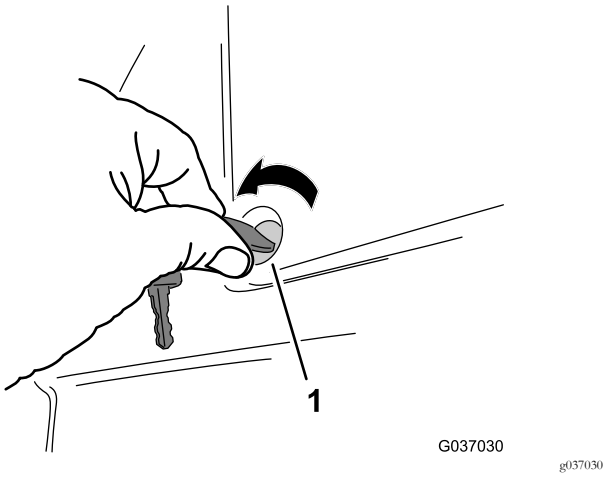

Figure 1

1. Quarter-turn-fastener

2. If installed, remove the padlock that secures the platform-latch handle (Figure 2).

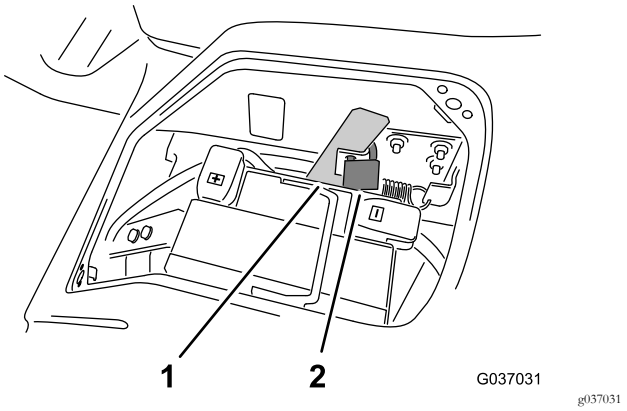

Figure 2

1. Platform-latch handle 2. Padlock

3. Move the handle forward to unlatch the platform from the chassis of the machine (Figure 3).

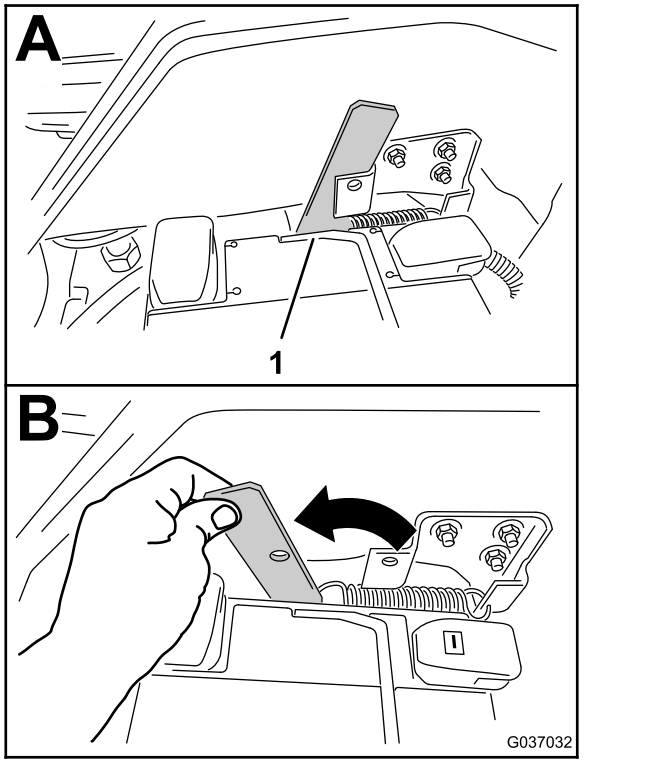

Figure 3

1. Platform-latch handle

4. Lift the operator's platform up and forward (Figure 4).

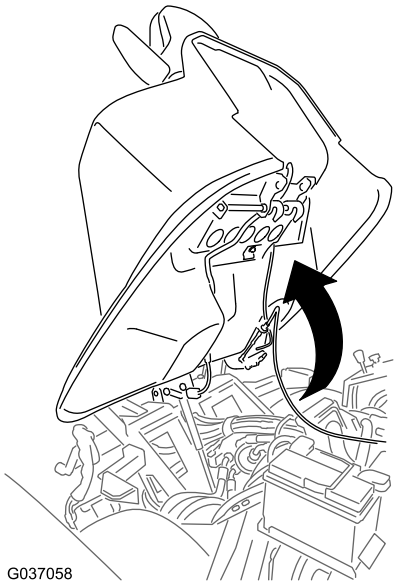

g037058

Figure 4

Raising the Operator's Platform (Models 30651, 30654, 30657, and 30659)

Move the platform latch handle to the unlock position and tilt the operator's platform forward as shown in Figure 5.

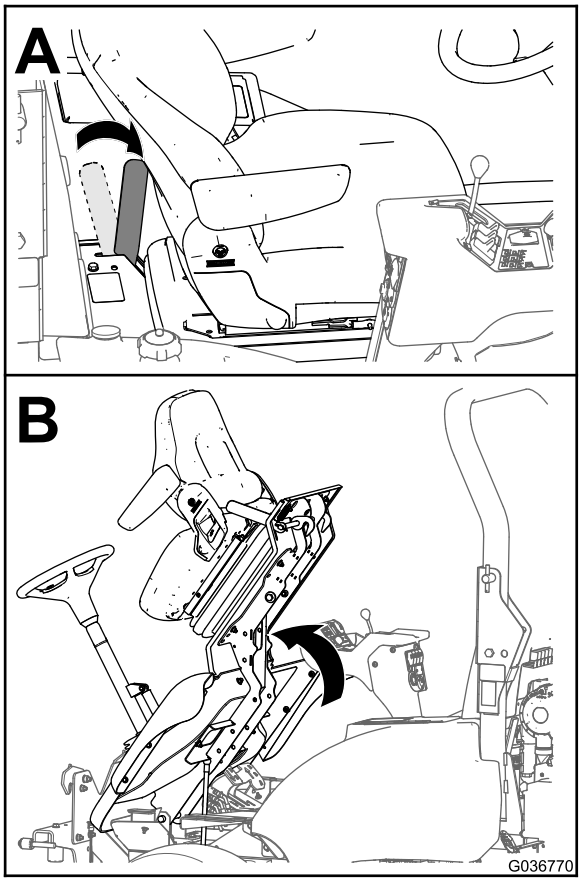

g036770

Figure 5
Model 30659 shown

Disconnecting the Battery

1. Lift the cover of the of the negative battery cable (Figure 6).

   Note: Lifting the cover will loosen the battery cable terminal from the negative battery post.

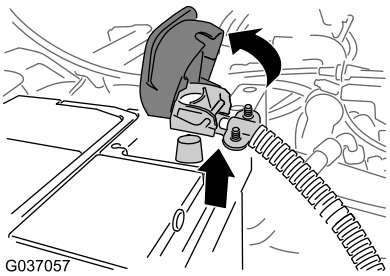

g037057

Figure 6

2. Remove the negative battery cable from the battery (Figure 6).

   Note: Position the negative-battery cable where it cannot contact the negative battery post.

Removing the Storage Compartment (Models 30651, 30654, 30657, and 30659)

1. Open the cover of the storage compartment (Figure 7).

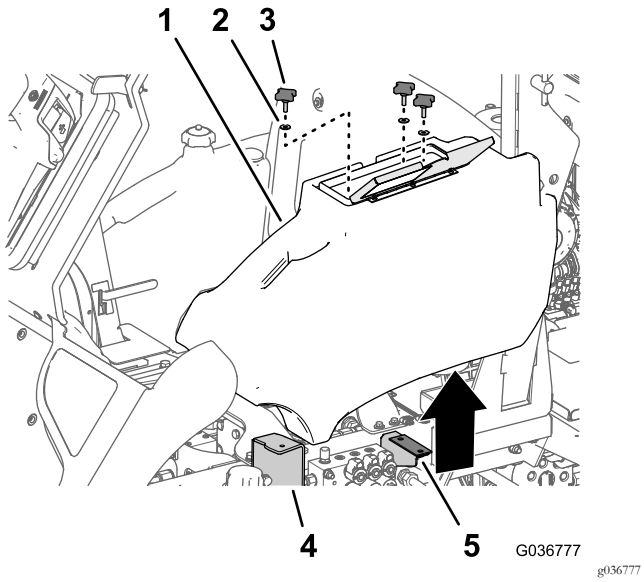

Figure 7

1. Storage compartment
2. Washer
3. Knob
4. Flange (step)
5. Storage-compartment bracket

2. Loosen and remove the 3 knobs and 3 washers that secure the compartment to the flange of the step and the storage-compartment bracket (Figure 7).
3. Lift the storage compartment from the machine.

2

Removing the Seat

No Parts Required

Procedure

Seat weight: 38 kg (84 lb)

Note: Have another person help you remove the seat.

1. Disconnect the connector for the seat-switch wire harness from the connector of the machine wire harness (Figure 8).

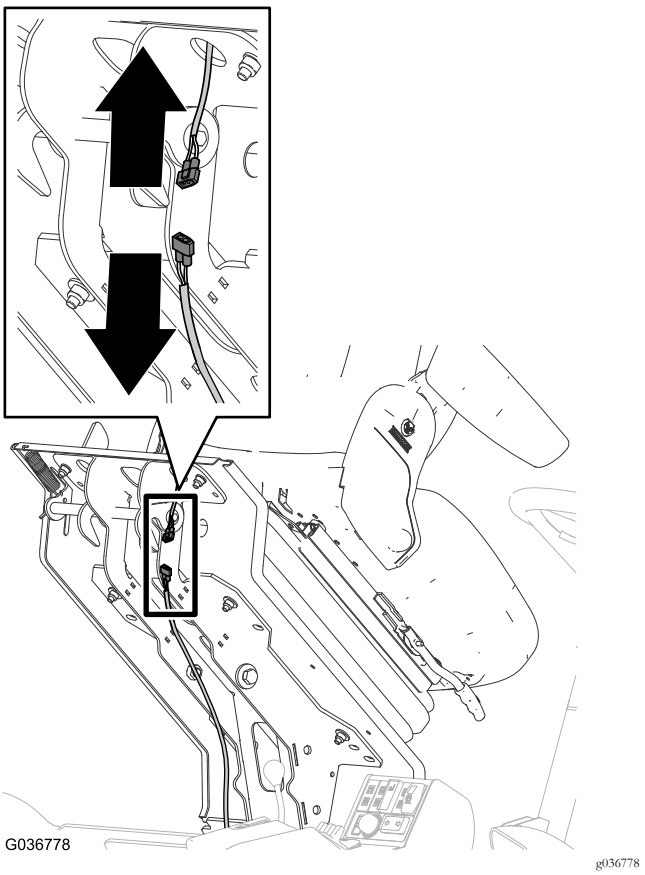

Figure 8

3000 series model shown; model 02750 is similar

2. Route the connector for the seat-switch wire harness through the seat platform and secure the connector to the seat.
3. Remove the boot from the seat base as follows (Figure 9).
   A. At the sides of the seat-base boot, locate its mounting tabs that protrude through the slot in the channel of the seat base.

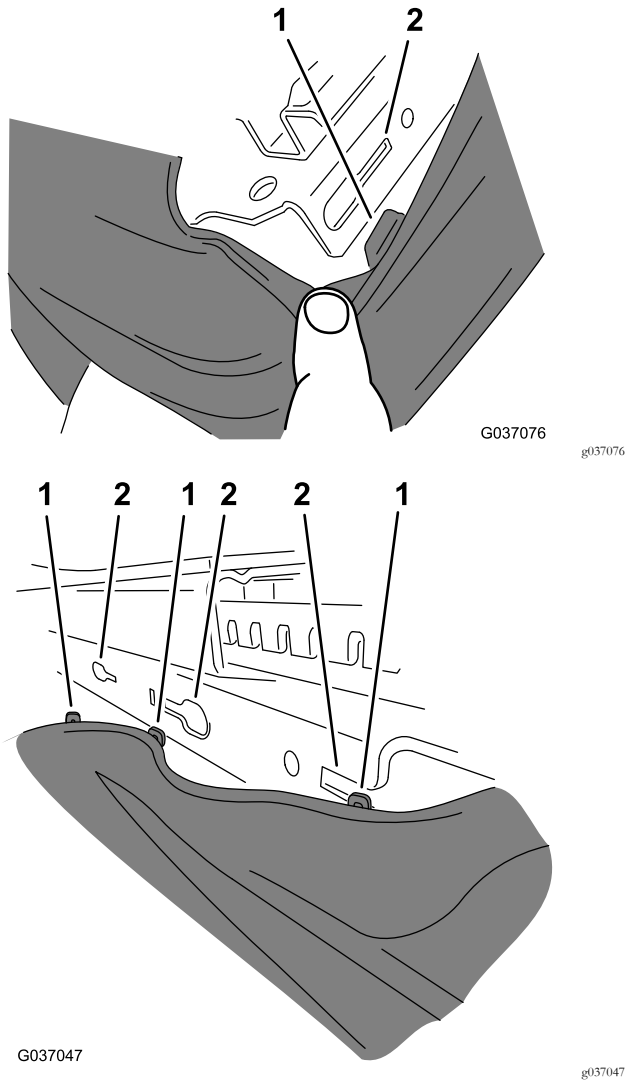

Figure 9

1. Tabs (seat-base boot)
2. Slots (seat-base channel)

B. Pull each tab along the slot until the tab is over the hole and then pull the tab out and away from the seat-base channel.

Note: Pull the boot forward or rearward depending on which tab you are the removing.

C. When all of the tabs are removed from their slots, pull the rubber boot down (A of Figure 10).

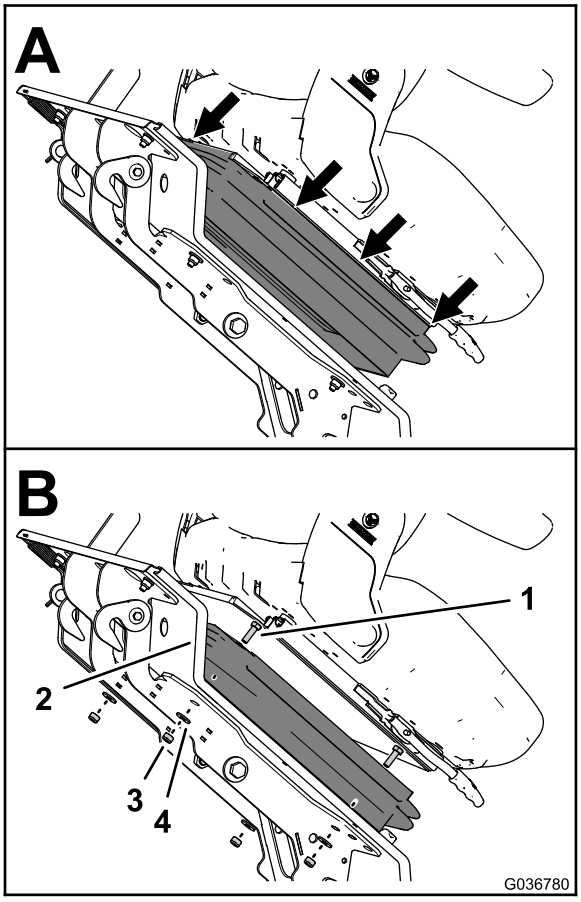

Figure 10

1. Bolt (8 x 25 mm)
2. Seat platform
3. Locknut (8 mm)
4. Washer (8 mm)

4. While supporting the seat, remove the 4 washers (8 mm) and 4 locknuts (8 mm) that secure the seat to the seat platform (B of Figure 10).

Note: Do not remove the 4 bolts (8 x 25 mm) from the holes in the seat and seat platform.

5. Lower the operator's platform as follows:

A. Lower the platform carefully; refer to Figure 5 in Raising the Operator's Platform (Models 30651, 30654, 30657, and 30659) (page 3).

B. Move the locking-latch handle toward the front of the mower as the platform nears the fully lowered position; refer to Figure 5 in Raising the Operator's Platform (Models 30651, 30654, 30657, and 30659) (page 3).

Note: This ensures that the latch hooks clear the locking bar.

C. Fully lower the platform and move the locking handle toward the rear of the mower until the latch hooks fully engage the locking bar; refer to Figure 5 in Raising the Operator's Platform (Models 30651, 30654, 30657, and 30659) (page 3).

6. Remove the seat from the platform.

Note: Discard the 4 bolts (8 x 25 mm), 4 locknuts (8 mm), and 4 washers (8 mm).

3

Preparing the New Seat (Model 02750)

Parts needed for this procedure:

1	Seat

Procedure

Important: This procedure is required only for Model 02750.

Note: In this procedure, you will remove the static seat belt from the old seat and install the seat belt onto the new seat.

1. Remove the covers and bolts that secure the static seat belt from the old seat (Figure 11).

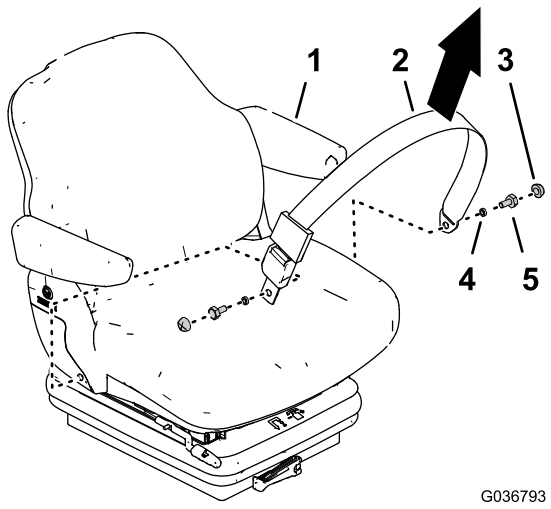

g036793

Figure 11

1. Seat (old)
2. Seat belt (static)
3. Cover
4. Bushing
5. Bolt

2. Remove the covers and bolts that secure the automatic tensioning-seat belt from the new seat, and remove the seat belt (Figure 12).

   Note: You no longer need the automatic-tensioning seat belt.

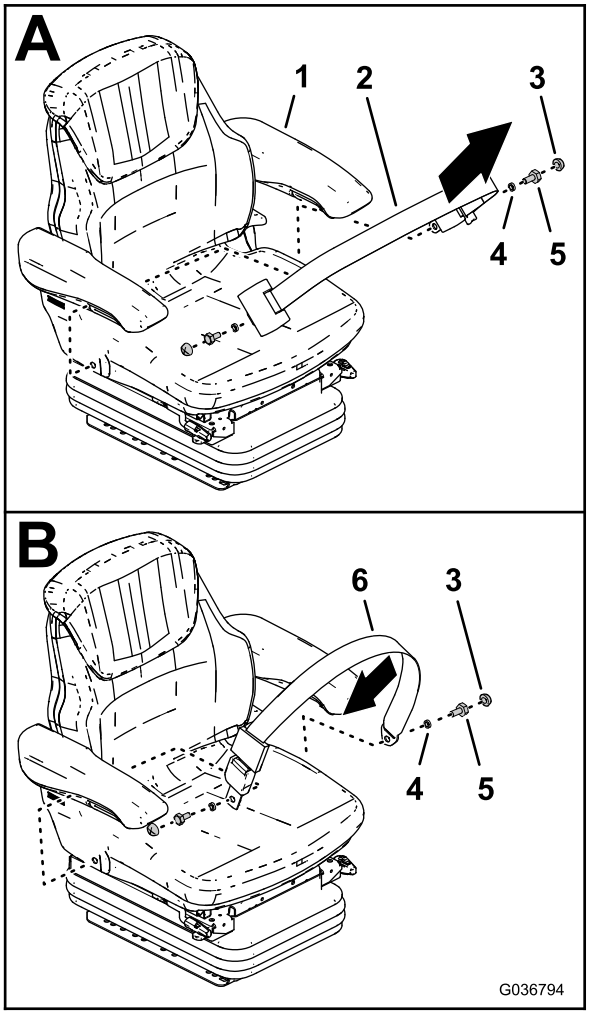

g036794

Figure 12

1. Seat (new)
2. Seat belt (automatic tensioning)
3. Cover
4. Bushing
5. Bolt
6. Seat belt (static)

3. Assemble the static seat belt onto the new seat (Figure 12).
4. Torque the bolts to 35 to 43 N·m (26 to 32 ft-lb) and install the covers (Figure 12).

4

Installing the Seat

Parts needed for this procedure:

10	Washer (8 x 17 mm)
4	Cap screw (8 x 40 mm)
4	Nut—plain (8 mm)
2	Washer (5/16 x 1)
4	Locknut (8 mm)
4	Cap screw (8 x 25 mm)

Assembling the Seat to the Platform (Model 02750)

Seat weight: 40 kg (88 lb)

1. At the bottom plate of the new seat, locate the seat-mounting holes for your machine (Figure 13).

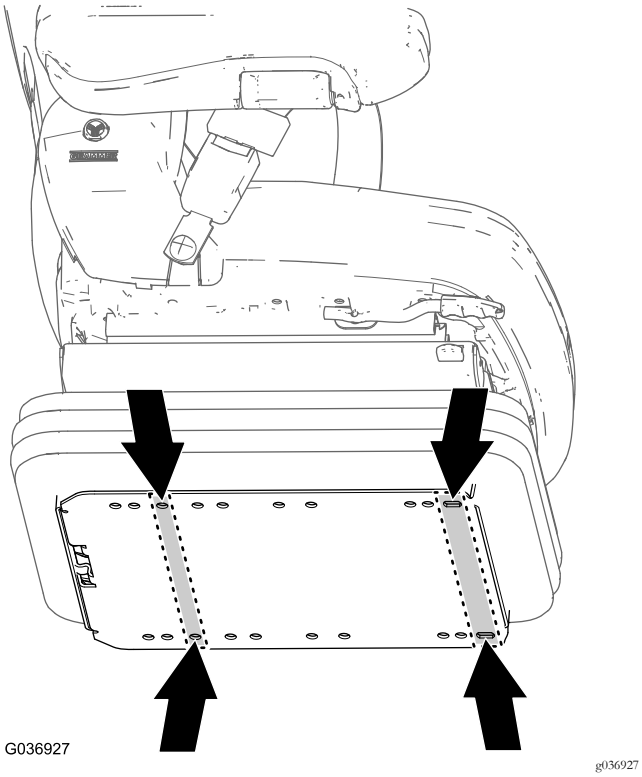

Figure 13
Model 02750 only

2. Assemble 4 cap screws (8 x 40 mm), 8 washers (8 x 17 mm), and 4 nuts—plain (8 mm) to the holes in the flange of the bottom plate (Figure 14) that you identified in step 1.

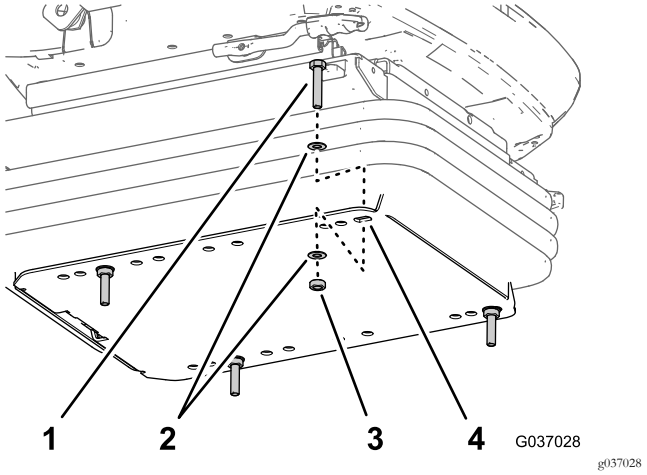

Figure 14

1. Cap screw (8 x 40 mm)
2. Washer (8 x 17 mm)
3. Nut—plain (8 mm)
4. Flange (seat-bottom plate)

3. Align the 4 cap screws (8 x 40 mm) of the new seat with the holes in the operators platform (Figure 15).

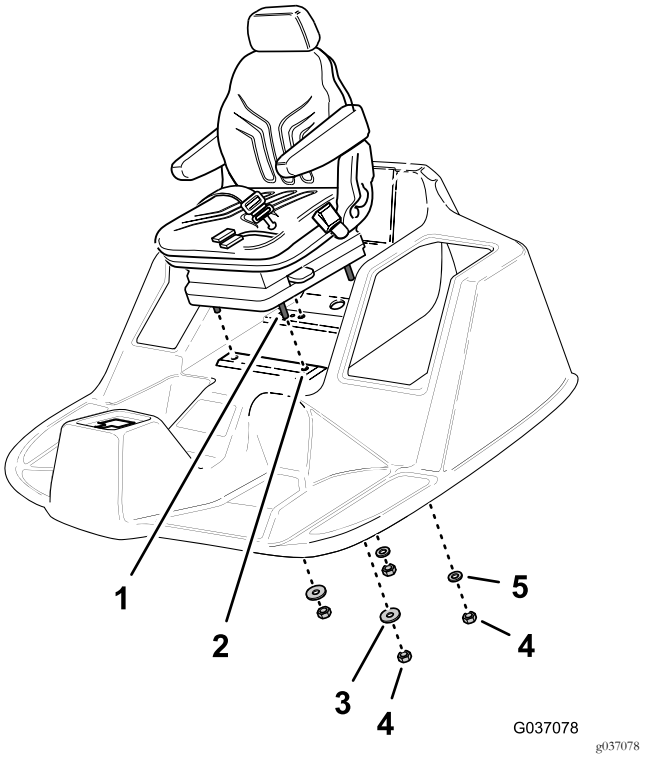

Figure 15

1. Cap screw (8 x 40 mm)
2. Operator's platform
3. Washer (5/16 x 1 inch)
4. Locknuts (8 mm)
5. Washer (8 x 17 mm)

4. Partially raise the operator's platform to access the threads of the 4 cap screws.

Important: Support the seat to prevent it falling.

5. Assemble the 2 locknuts (8 mm) and 2 washer (5/16 x 1 inch) at the 2 forward cap screws by hand (Figure 15).

6. Assemble the 2 locknuts (8 mm) and 2 washer (8 x 17 mm) at the 2 rear cap screws by hand (Figure 15).
7. Fully raise the platform.
8. Torque the locknuts and cap screws to 27 N·m (20 ft-lb).

Assembling the Seat to the Platform (Models 30651, 30654, 30657, and 30659)

1. At the bottom plate of the new seat, locate the seat-mounting holes for your machine (Figure 16).

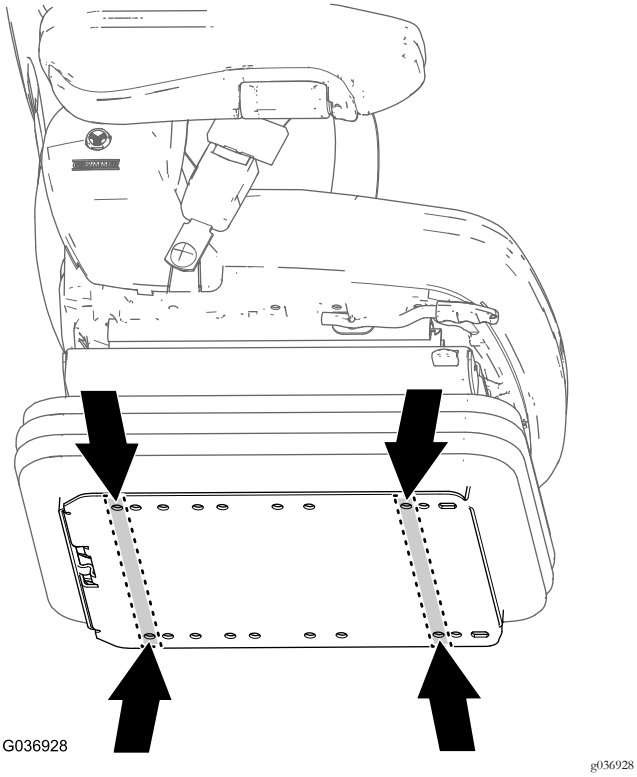

Figure 16
Models 30651, 30654, 30657, and 30659

2. Assemble 4 cap screws (8 x 25 mm), 4 washers (8 x 17 mm) to the holes in the flange of the bottom plate that you identified in step 1.

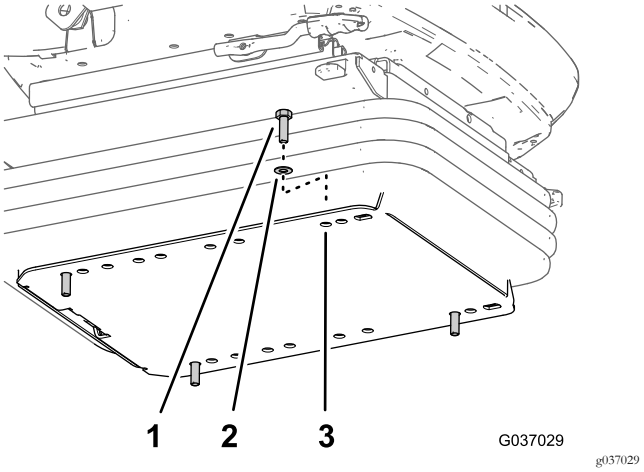

Figure 17

1. Cap screw (8 x 25 mm)
2. Washer (8 x 17 mm)
3. Flange (seat-bottom plate)

3. Align the 4 cap screws (8 x 25 mm) of the new seat with the holes in the operators platform (Figure 18).

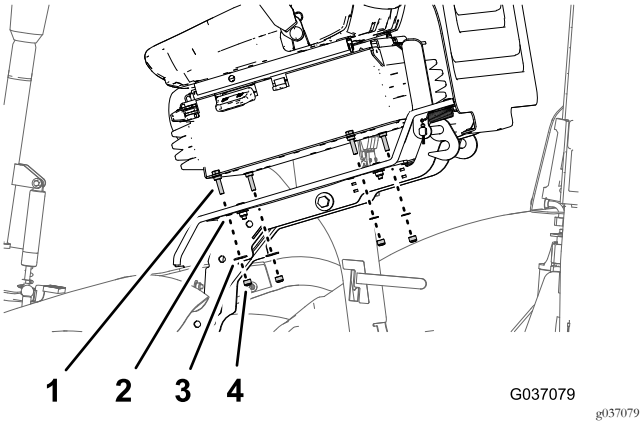

Figure 18

1. Cap screw (8 x 25 mm)
2. Operator's platform
3. Washer (8 x 17 mm)
4. Locknuts (8 mm)

4. Assemble 2 locknuts (8 mm) and 2 washers (8 x 17 mm) to the cap screws on the left side of the seat.
5. Partially raise the operator's platform to access the threads of the 2 other cap screws.

Important: Support the seat to prevent it falling.

6. Assemble the 2 locknuts (8 mm) and 2 washer (8 x 17 mm) to the other 2 cap screws by hand (Figure 15).
7. Fully raise the platform.
8. Torque the locknuts and cap screws to 27 N·m (20 ft-lb).

5

Connecting the Electrical Components

Parts needed for this procedure:

1	2-Way connector kit (recpt)
1	Relay and harness assembly (Model 02750)
1	Wire harness—350 cm (137-3/4 inches—Model 02750)
1	Wire harness—400 cm (157-1/2 inches—Models 30651, 30654, 30657, and 30659)
1	Fuse (10 A)

Using the 2-Way Connector Kit (Recpt)

Use the 2-Way Connector Kit to replace the 2 pin Gothic style connector that can be found on the wiring harness of older machines. Refer to the kit's instructions for details on how to install the kit.

Connecting the Relay and Harness (Model 02750)

1. Locate the relay and harness assembly as shown in Figure 19.

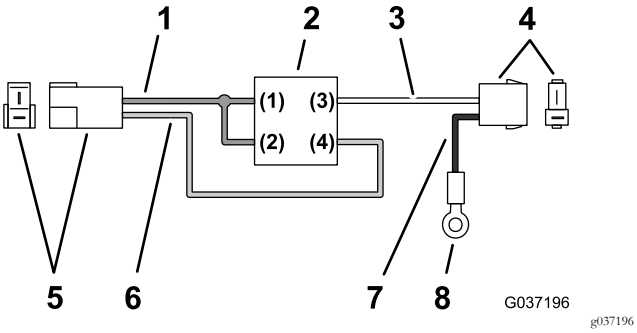

Figure 19

1. Wire (red +12 V)
2. Relay
3. Wire (white)
4. 2-socket connector (seat)
5. 2-blade connector
6. Wire (green)
7. Wire (black)
8. Ring terminal

2. Connect the 2-blade connector of the relay harness into the 2-socket connector (Figure 20) of the machine wire harness that you disconnected in step 1 of 2 Removing the Seat (page 4).

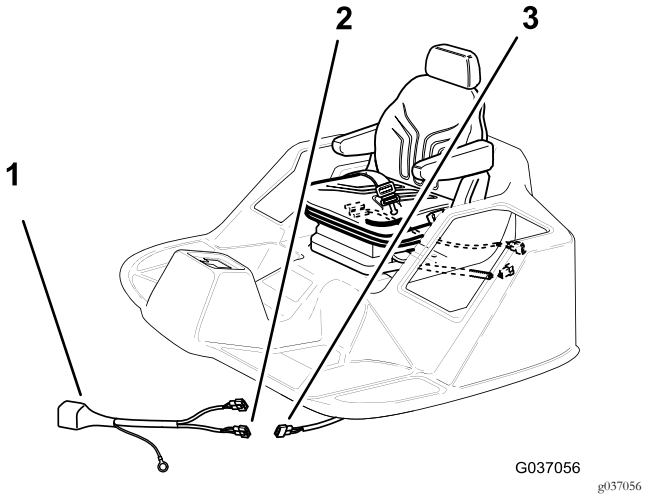

Figure 20

1. Relay and harness assemble
2. 2-pin connector (to main harness)
3. 2-socket connector (main harness)

3. Route the branch of the harness with the ring terminal to the horn at the front of the machine, below the seat platform (Figure 21).

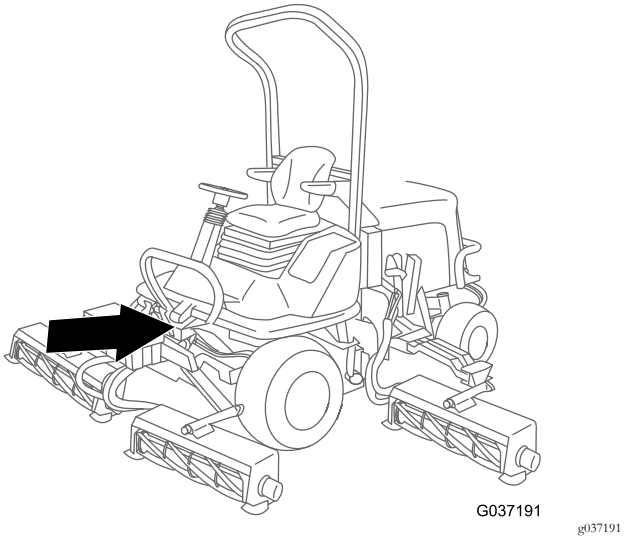

Figure 21

4. Remove the bolt, washers, and nut that secure the ring terminal of the machine wire harness and the bracket for the horn (Figure 22).

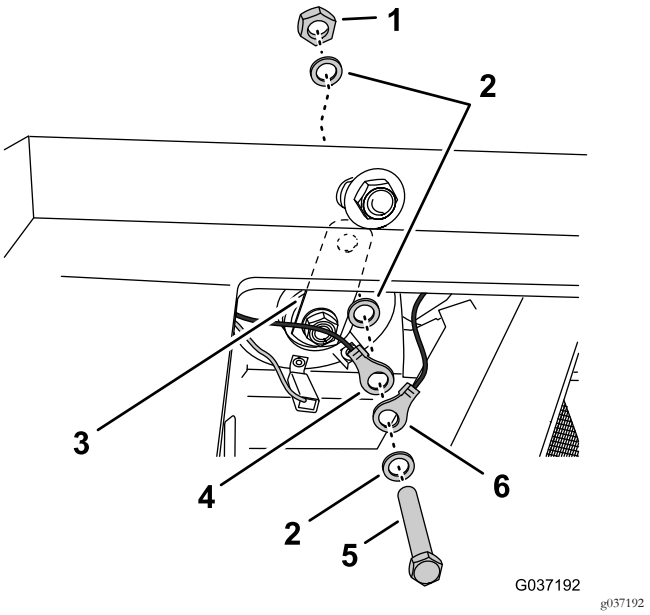

Figure 22

1. Nut
2. Washers
3. Bracket (horn)
4. Ring terminal (machine harness)
5. Bolt
6. Ring terminal (relay harness)

5. Assemble the ring terminal of the relay harness, the ring terminal of the machine wire harness, and the horn to the chassis with the bolt, washers, and nut that you removed in step 4.
6. Route the 2-socket connector for the relay harness (white and black wires) and the through the hole in the platform located behind the seat (Figure 23).

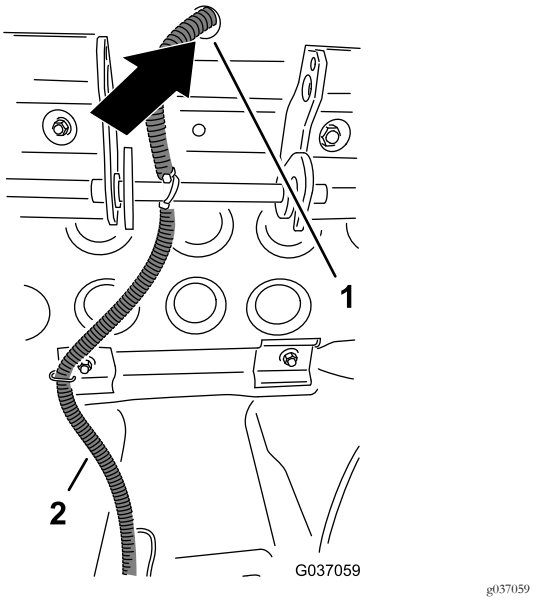

Figure 23

1. Hole (bottom of platform)
2. Relay harness and kit harness

7. At the back of the seat, locate the 2-pin connector for the seat switch (yellow and grey wires) and connect it to the 2-socket connector of the relay harness (white and black wires) as shown in Figure 24.

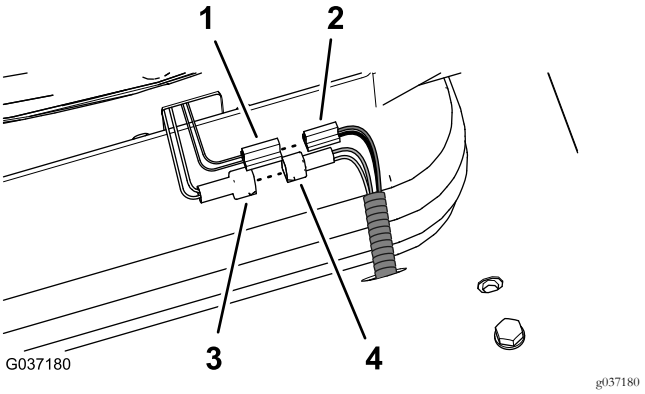

Figure 24

1. 2-blade connector—seat-air-suspension
2. 2-socket connector—350 cm (137-3/4 inches) kit wire harness (black and red wires)
3. 2-pin connector—seat switch (yellow and grey wires)
4. 2-socket connector—relay harness (white and black wires)

Connecting the Seat-Air-Suspension Wire Harness (Model 02750)

1. Locate the 350 cm (137-3/4 inches) wire harness (without a ring terminal) as shown in Figure 25.

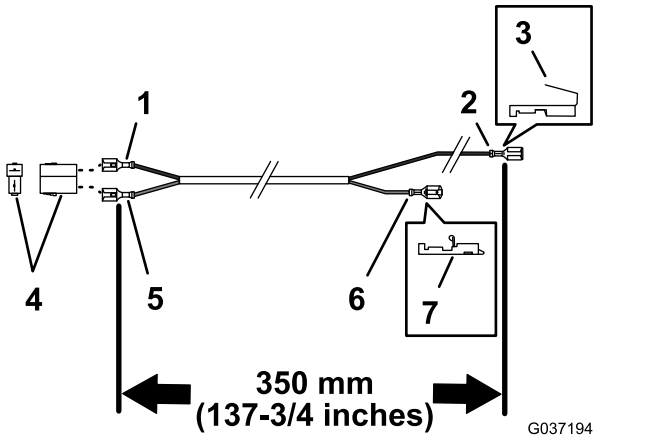

Figure 25

1. Wire (black)
2. Socket terminal (black wire)
3. Piggy-back feature(socket terminal)
4. 2-socket connector
5. Wire (red)
6. Socket terminal (red wire)
7. Posilock feature (socket terminal)

2. At the bottom of the platform, route the 2-socket connector (black and red wires) for the 350 cm (137-3/4 inches) kit wire harness along the relay harness and through the hole in the platform located

behind the seat; refer to Figure 23 in Connecting the Relay and Harness (Model 02750) (page 9).

3. Connect the 2-blade connector for the seat-air-suspension into the 2-socket connector (black and red wires) for the 350 cm (137-3/4 inches) kit wire harness; refer to Figure 24 in Connecting the Relay and Harness (Model 02750) (page 9).
4. Route the wire around the platform pivot, and back toward the control panel area.

   Note: Ensure the cable is routed so that it cannot get crushed when the platform is lowered.
5. Working under the control panel, locate the parking-lamp connector and remove the socket connector for the black wire from the parking-lamp connector (Figure 26).

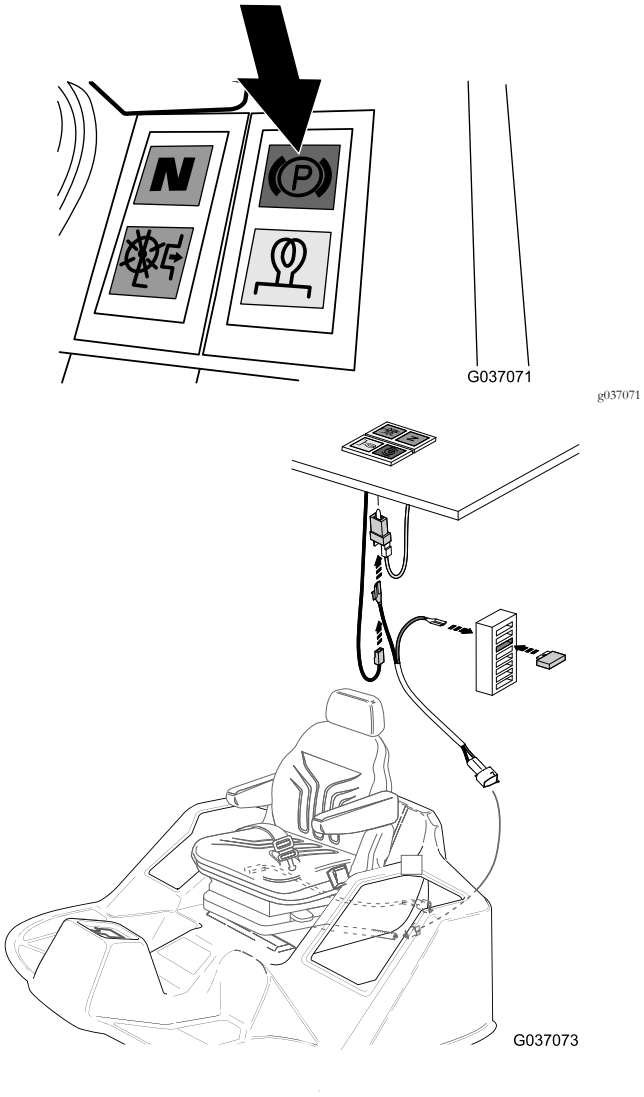

Figure 26

6. Connect the socket connector for the black wire that you removed in step 5 onto the blade terminal of the piggy-back connector (black wire) of the relay harness (Figure 26 and Figure 27).

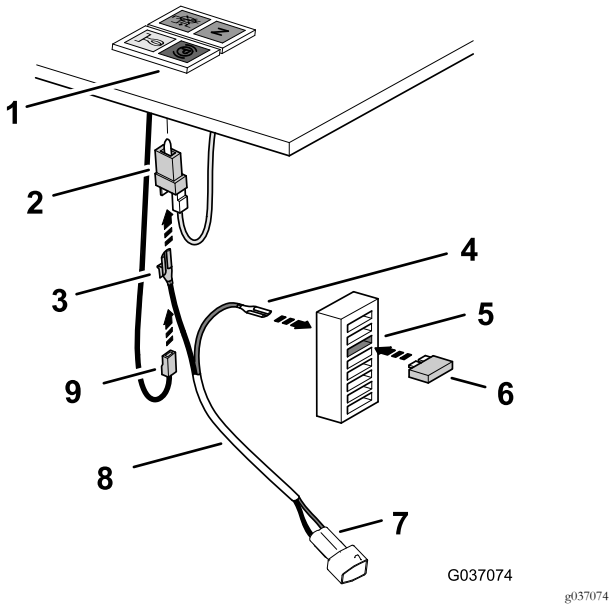

Figure 27

1. Control panel (parking lamp)
2. Parking-lamp connector
3. Piggy-back (black wire—relay harness)
4. Socket terminal (red wire—relay harness)
5. Fuse block socket (3rd from the top)
6. Fuse(10 A)
7. 2-socket connector (seat-air-suspension)
8. Kit wire harness—350 cm (137-3/4 inches)
9. Socket connector (black wire—machine harness)

7. Connect the piggy-back connector onto the blade terminal of the parking-lamp connector (Figure 27).
8. At the back of the fuse box, connect the socket terminal (red wire) of the relay harness, onto the blade connector of the fuse block at the 3rd fuse position from the top of block (Figure 27).
9. Insert the fuse (10 A) into the 3rd fuse position from the top of the fuse block (Figure 27).

   Note: Ensure that the fuse is fully seated.
10. Secure all cables with the supplied cable ties.

Removing the Bulkhead Panel (Models 30651, 30654, 30657, and 30659)

1. Remove the 4 bolts (6 x 25 mm), 4 lock washers (6 mm), and 4 flat washers (6 mm) that secure the bulkhead panel to the chassis of the machine (Figure 28).

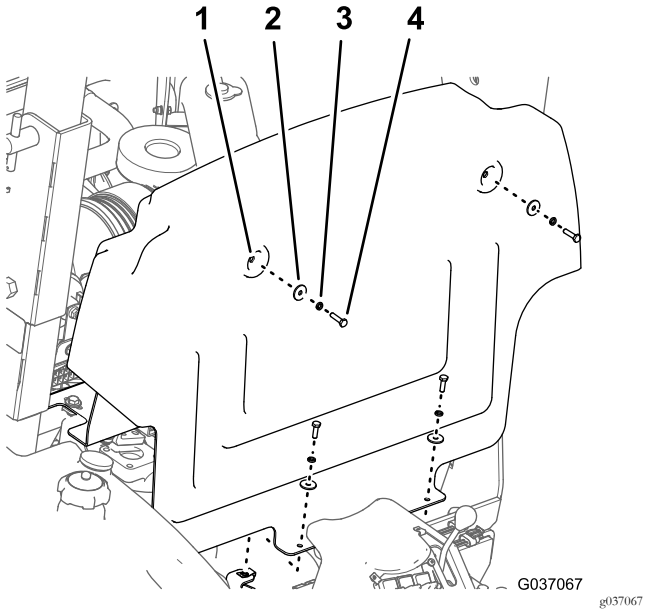

Figure 28

1. Bulkhead panel
2. Flat washer
3. Lock washer
4. Bolt

2. Move the panel up and forward, and remove the it from the machine (Figure 28).

Connecting the Electrical Components for the Seat (Models 30651, 30654, 30657, and 30659)

1. Route the wire harness of the machine that you disconnected in step 1 of 2 Removing the Seat (page 4) through the hole in the operator's platform (Figure 29).

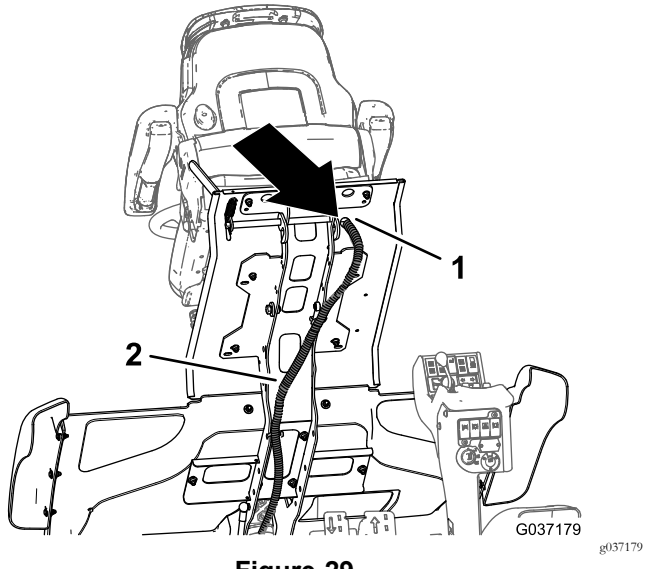

Figure 29

1. Hole (bottom of platform)
2. Kit harness 400 cm (157-1/2 inches)

2. Connect to the connector for the seat switch (yellow and grey wires) to the connector of the machine wire harness (Figure 30).

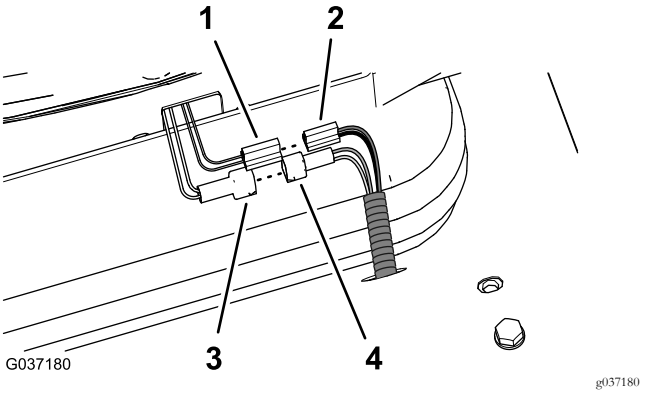

Figure 30

1. 2-blade connector—seat-air-suspension
2. 2-socket connector—400 cm (157-1/2 inches) kit wire harness (black and red wires)
3. 2-pin connector—seat switch (yellow and grey wires)
4. 2-socket—relay harness (white and black wires)

3. Locate the 400 cm (157-1/2 inches) wire harness (with a ring terminal) as shown in Figure 31.

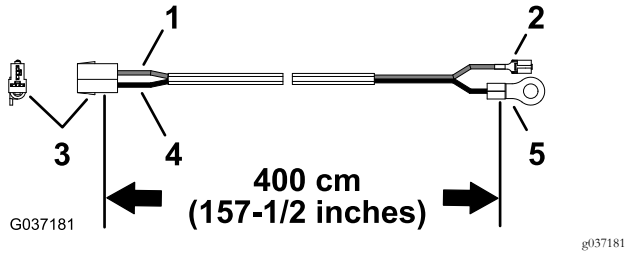

Figure 31

1. Wire (red)
2. Socket terminal
3. 2-socket connector
4. Wire (black)
5. Ring terminal

4. At the bottom of the platform, route the 2-socket connector (black and red wires) of the 400 cm (157-1/2 inches) kit wire harness through the hole in the platform located behind the seat; refer to Figure 29.
5. Connect the 2-blade connector for the seat-air-suspension into the 2-socket connector (black and red wires) of the 400 cm (157-1/2 inches) kit wire harness (Figure 30 and Figure 31).
6. Route the wire around the platform pivot, and back to the fuse box area (Figure 32).

Important: Ensure the cable is routed such that it cannot get crushed when the platform is lowered.

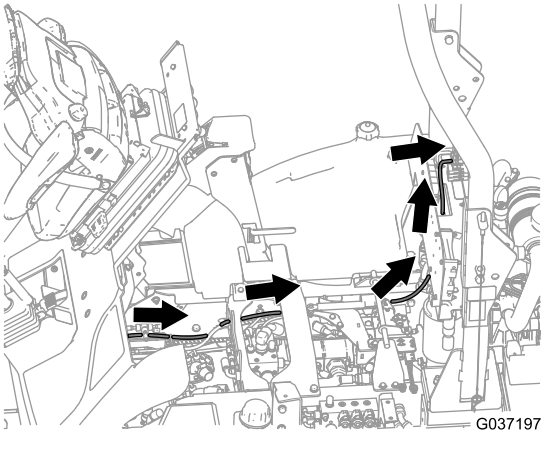

Figure 32

Connecting the Kit Wire Harness to the Fuse Block (Models 30651, 30654, 30657, and 30659)

1. At the back side of the bulkhead, remove the locknut, washer that secure the horn to the that secures the horn to electrical plate (Figure 33).

   Note: Do not remove the bolt.

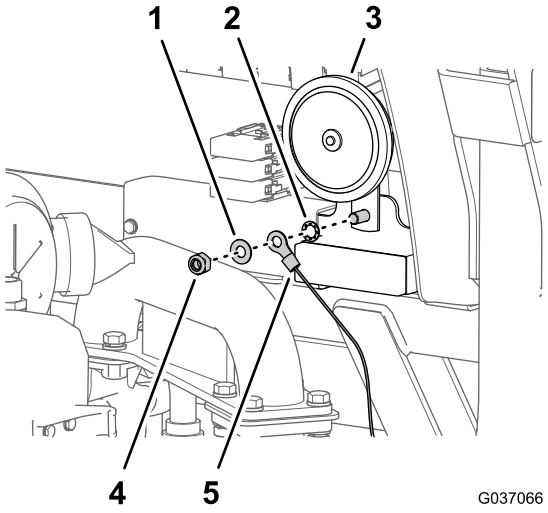

Figure 33

1. Lock washer
2. Washer
3. Horn
4. Locknut
5. Ring terminal

2. Assemble the locknut, washer, and ring terminal of the relay harness, and lock washer onto the bolt as shown in Figure 33, and torque the nut and bolt to 23 to 29 N·m (17 to 21 ft-lb).
3. At the front of the electrical panel, connect the terminal of the red wire (power lead) into terminal of the block as follows:
   - Model 30651—5th fuse position from the left (Figure 34)

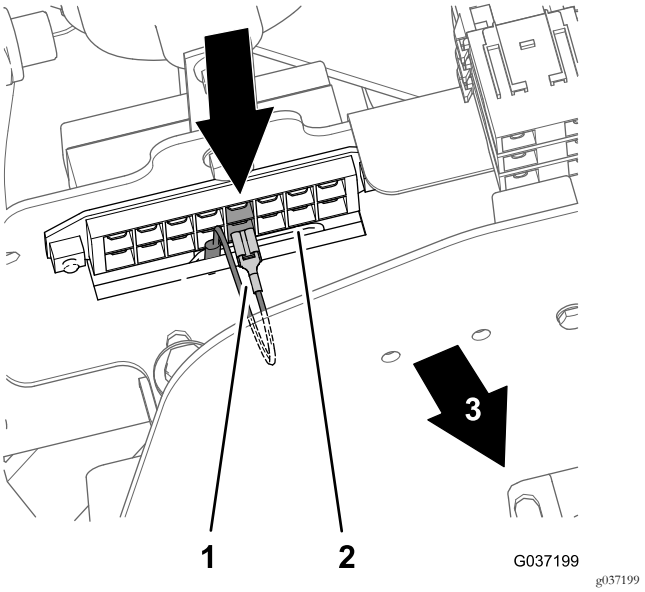

Figure 34
Models 30651

1. Terminal—red wire (power lead) 5th fuse position
2. Fuse block
3. Front of the machine

   - Models 30654, 30657, and 30659—4th fuse position from the left (Figure 35)

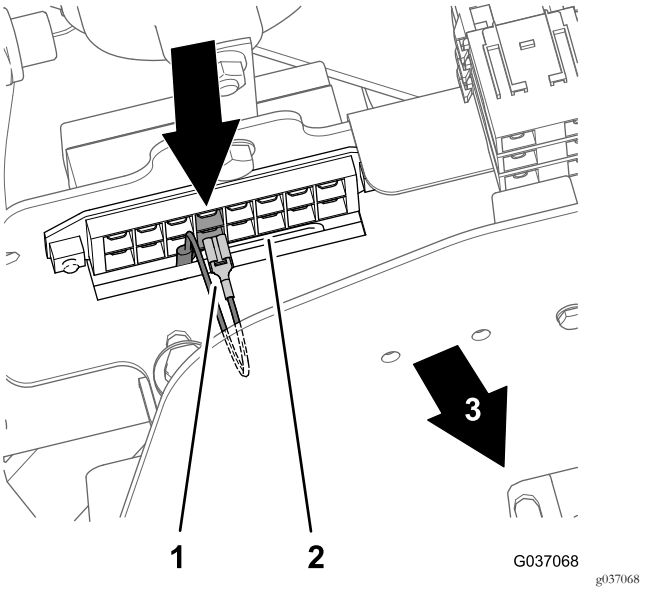

Figure 35
Models 30654, 30657, and 30659

1. Terminal—red wire (power lead) 4th fuse position
2. Fuse block
3. Front of the machine

4. Secure all cables with the supplied cable ties.

Installing the Fuse (Models 30651, 30654, 30657, and 30659)

1. Remove the cover from the fuse block (Figure 36).

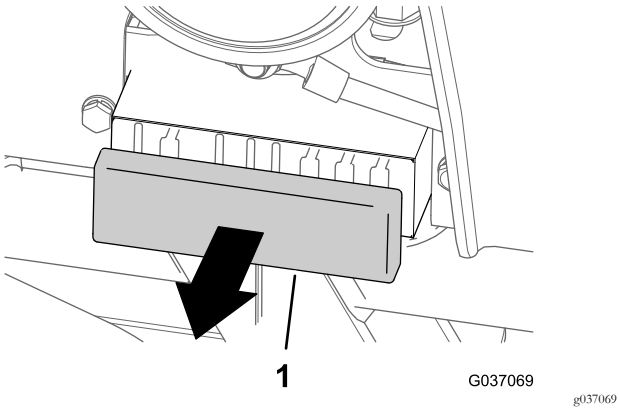

Figure 36

1. Cover (fuse block)

2. Insert the 10 A fuse into the 4th slot from the right side of the fuse block as follows:

   Note: Ensure that the fuse is fully seated.

   - Model 30651—4th fuse position from the left (Figure 37)

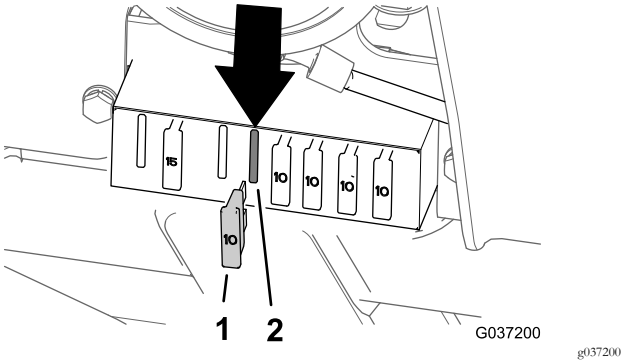

Figure 37
Models 30651

1. 10 A fuse
2. Fuse-block socket (4th slot from the left)

   - Models 30654, 30657, and 30659—5th fuse position from the left (Figure 38)

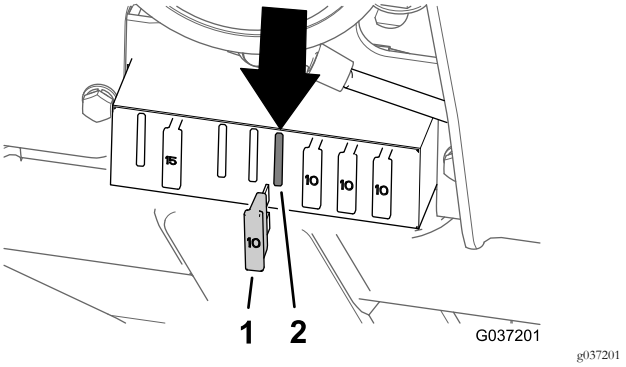

Figure 38
Models 30654, 30657, and 30659

1. 10 A fuse
2. Fuse-block socket (5th slot from the left)

3. Install the cover on to the fuse block (Figure 36).

Installing the Bulkhead Panel (Models 30651, 30654, 30657, and 30659)

1. Align the 4 holes in the bulkhead panel with the 4 clip nuts on the chassis; refer to Figure 28.
2. Secure the bulkhead panel to the chassis of the machine with the 4 bolts, 4 lock washers, and 4 flat washers; refer to Figure 28.
3. Torque the bolts to 97 to 119 N·m (86 to 106 in-lb).

6

Completing the Seat Kit Installation

No Parts Required

Installing the Storage Compartment (Models 30651, 30657, and 30659)

1. Align the 3 holes in the storage compartment with the hole in the flange of the step and the holes in the storage-compartment bracket; refer to Figure 7 in Removing the Storage Compartment (Models 30651, 30654, 30657, and 30659) (page 4).
2. Assemble the compartment to the step and bracket with the 3 knobs and 3 washers that you removed in step 2 of Removing the Storage Compartment (Models 30651, 30654, 30657, and 30659) (page 4).

   Note: Ensure that the knobs are sufficiently tightened to secure the compartment to the chassis.

Lowering the Operator's Platform

1. Lower the platform carefully; refer to Raising the Operator's Platform (Model 02750) (page 2) or Raising the Operator's Platform (Models 30651, 30654, 30657, and 30659) (page 3).
2. Move the locking-latch handle toward the front of the mower as the platform nears the fully lowered position; refer to Raising the Operator's Platform (Model 02750) (page 2) or Raising the Operator's Platform (Models 30651, 30654, 30657, and 30659) (page 3).

   Note: This ensures that the latch hooks clear the locking bar.
3. Fully lower the platform and move the locking handle toward the rear of the mower (Figure 39 or Figure 40) until the latch hooks fully engage the locking bar.

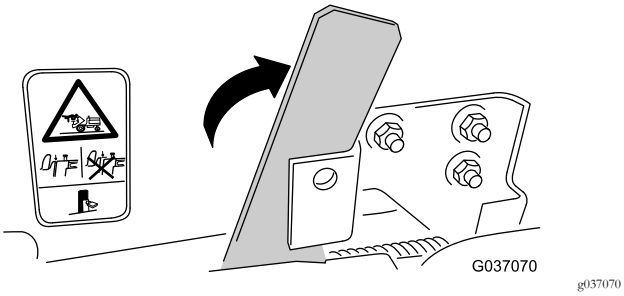

Figure 39
Model 02750

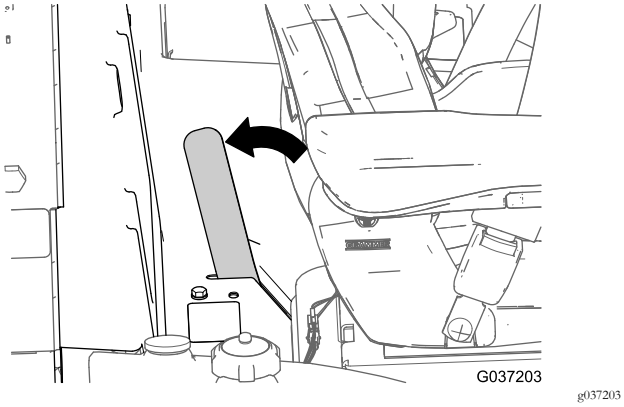

Figure 40
Models 30651, 30654, 30657, and 30659

Connecting the Negative Battery Cable

1. Connect the negative battery cable to the battery post; refer to in Figure 6 Disconnecting the Battery (page 3).
2. Align the insulator cover of the battery-cable terminal and close the cover; refer to Figure 6 in Disconnecting the Battery (page 3).

Installing the Battery Cover (Model 02750)

1. If removed, secure the latch to the operator's platform with the pad lock that you removed in step 2 of Raising the Operator's Platform (Model 02750) (page 2).

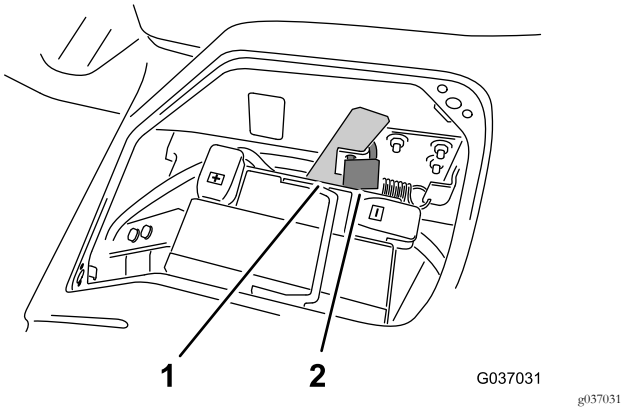

Figure 41

1. Platform-latch handle
2. Padlock

2. Align the cover to the opening in the operator's platform above the battery.
3. Secure the cover to the platform by rotating the 2 quarter-turn-fasteners clockwise (Figure 42).

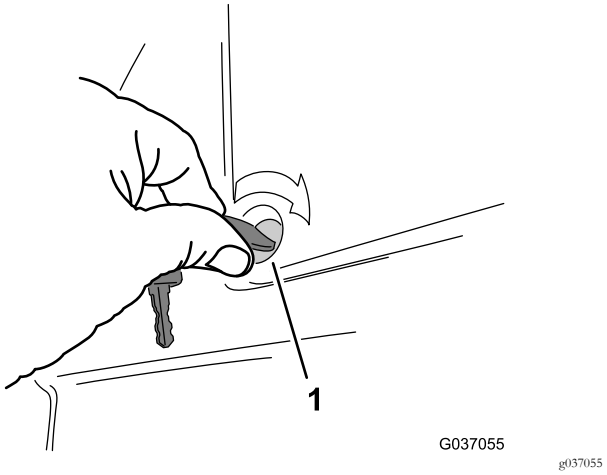

Figure 42

1. Quarter-turn-fastener

Checking the Operator's Seat Switch

Check that the seat switch in the seat operates correctly; refer to the *Operator's Manual* for your machine.

Product Overview

Controls

Seat Controls

Seat-Actuator Lever

Weight adjustment: The seat should be adjusted for the driver's weight by briefly pulling the actuator lever of the automatic weight and height adjuster with the vehicle at a standstill and the driver sitting on the seat.

Note: The driver must sit absolutely still during adjustment.

The seat height can be altered by pulling or pressing the actuator lever fully out or in.

Important: In order to avoid damage, do not operate compressor for more than 1 minute.

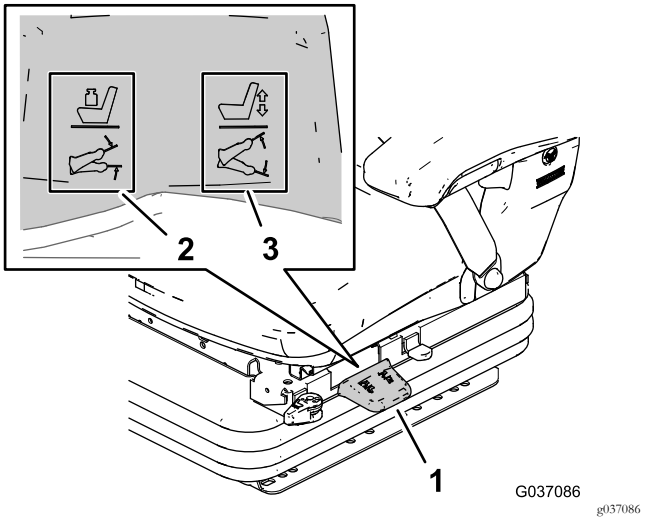

Figure 43

1. Seat-actuator lever
2. Weight-adjustment action
3. Height-adjustment action

Fore/Aft Locking Lever

Use the fore/aft adjustment lever to change the forward/rearward position of the seat (Figure 44). Lift the locking lever to release the seat, move the seat to a comfortable position, and release the locking lever to secure the position of the seat.

Important: The locking lever must secure the operator's seat at the desired position. The operator's seat must not move forward or rearward when the seat is locked.

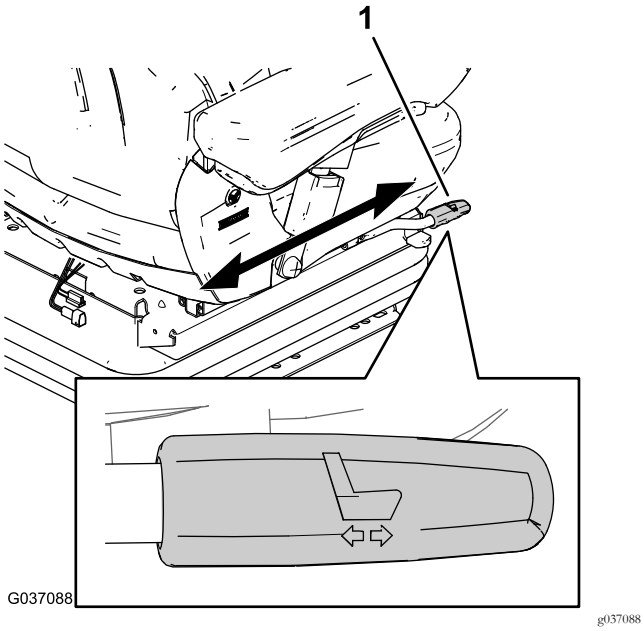

Figure 44

1. Fore/aft-locking lever

Fore/Aft-Isolator Lever

Fore/aft adjustment: Under certain driving conditions (for example with a trailer attached), it is useful to activate the fore/aft isolator. This means that shock impacts in the driving direction can be better absorbed by the driver seat (Figure 45).

- Rotate the fore/aft-isolator lever forward to allow forward and rearward isolation movement.
- Rotate the fore/aft-isolator lever forward to lock forward and rearward isolation movement.

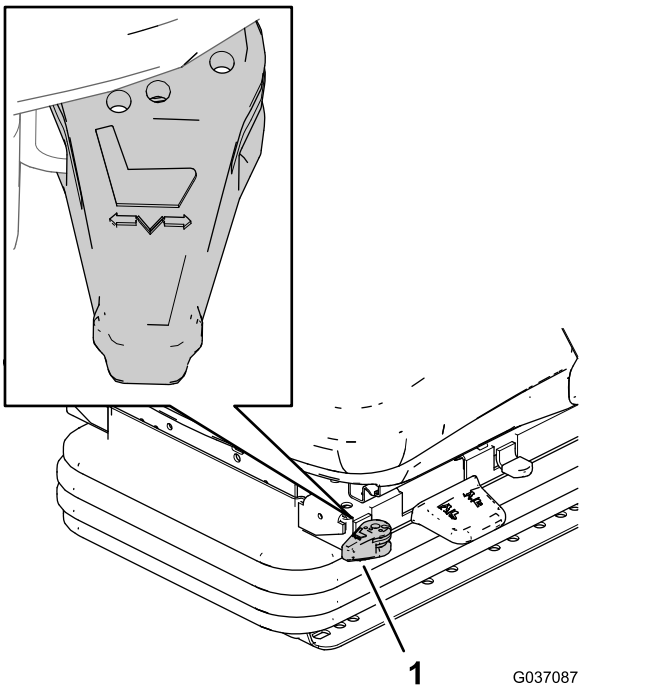

Figure 45

1. Fore/aft-isolator lever

Lumbar-Adjustment Knob

By turning the adjustment knob to the left or right, both the height and curvature of the backrest cushion can be individually adjusted (Figure 46).

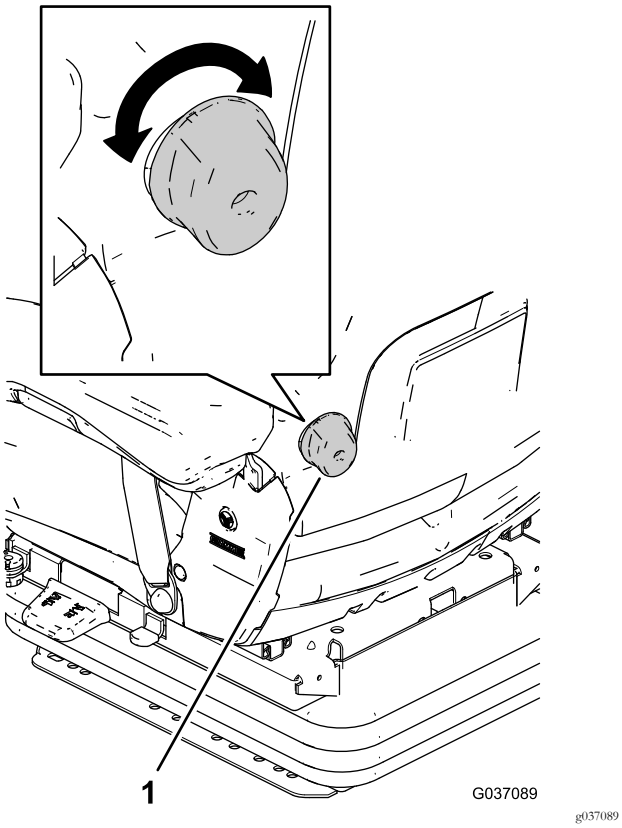

Figure 46

1. Lumbar-adjustment knob

Dampener-Locking Lever

Use the dampener-locking lever to stop the vertical dampening action of the seat and lock it to a set position (Figure 47).

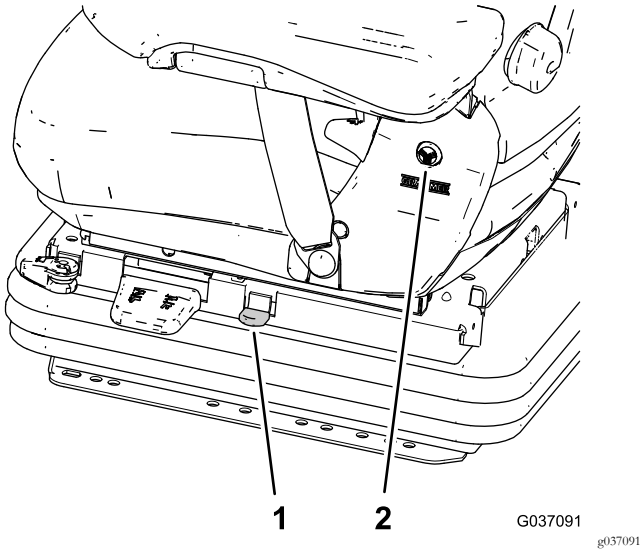

Figure 47

1. Dampener-Locking Lever
2. Round cap (cover)

Armrests

The armrests can be folded up if required and the height individually adjusted.

To adjust the armrests for height, separate the round cap from the cover, loosen the hexagon nut, and adjust the armrest to the desired position, then tighten the nut again (Figure 47).

Rotate the armrest-angle control to adjust the tilt is the arm rest (Figure 48).

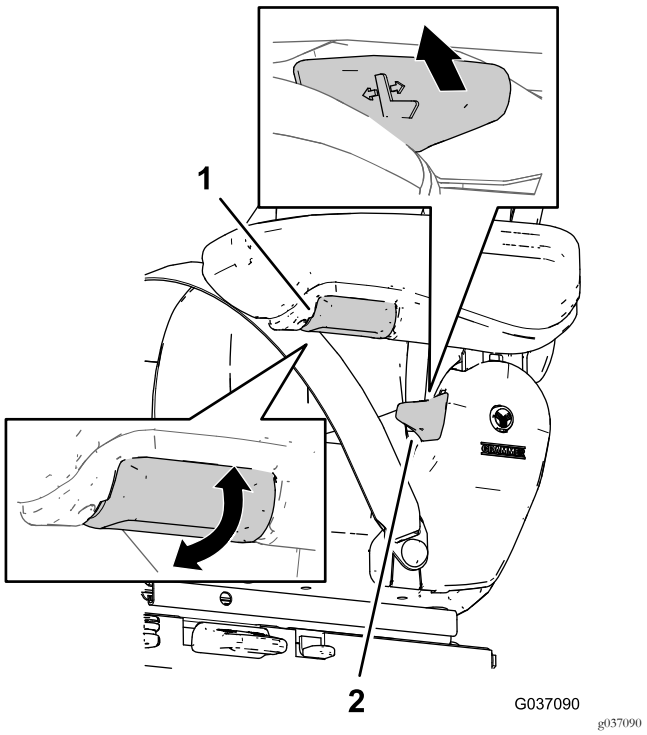

Figure 48

1. Backrest-tilt lever
2. Armrest-angle control

Backrest-Tilt Lever

Use the backrest-tilt lever to unlock the backrest when adjusting the recline angle (Figure 48).

Important: The locking lever must latch the backrest into the desired position. When you lock the backrest in position, the backrest should not move to another position.

Maintenance

Greasing the Seat Suspension Mechanism

Service Interval: Yearly

1. Pull back the rubber boot from the channel of the seat base.
2. Apply good quality grease to all pivot points of the suspension mechanism.
3. Install the boot onto the channel of the seat base.

Maintaining the Seat Belt

There are no field-serviceable parts on the seat belt. If it shows signs of wear, damage, or malfunction, replace the seat belt assembly.

Cleaning the Seat

Important: Do not clean the seat with a pressure washer.

Note: Keep the surfaces of the operator's seat clean.

⚠ CAUTION

Use caution when cleaning the backrest—unintentionally moving backrest-tilt lever may cause the backrest to rotate forward unexpectedly and cause injury.

When cleaning the backrest cushion, firmly hold the backrest when operating the backrest-tilt lever.

- You do not need to remove the upholstery from the seat frame for cleaning.
- While cleaning the upholstery, do not allow cleaning solution to soak through the upholstery surfaces.
- Use commercially available upholstery or plastic cleaning solution. Before using a new cleaning solution, test it for compatibility with the upholstery on a small concealed area of the seat.

Notes:

Notes:

Notes:

European Privacy Notice

The Information Toro Collects
Toro Warranty Company (Toro) respects your privacy. In order to process your warranty claim and contact you in the event of a product recall, we ask you to share certain personal information with us, either directly or through your local Toro company or dealer.

The Toro warranty system is hosted on servers located within the United States where privacy law may not provide the same protection as applies in your country.

BY SHARING YOUR PERSONAL INFORMATION WITH US, YOU ARE CONSENTING TO THE PROCESSING OF YOUR PERSONAL INFORMATION AS DESCRIBED IN THIS PRIVACY NOTICE.

The Way Toro Uses Information
Toro may use your personal information to process warranty claims, to contact you in the event of a product recall and for any other purpose which we tell you about. Toro may share your information with Toro's affiliates, dealers or other business partners in connection with any of these activities. We will not sell your personal information to any other company. We reserve the right to disclose personal information in order to comply with applicable laws and with requests by the appropriate authorities, to operate our systems properly or for our own protection or that of other users.

Retention of your Personal Information
We will keep your personal information as long as we need it for the purposes for which it was originally collected or for other legitimate purposes (such as regulatory compliance), or as required by applicable law.

Toro's Commitment to Security of Your Personal Information
We take reasonable precautions in order to protect the security of your personal information. We also take steps to maintain the accuracy and current status of personal information.

Access and Correction of your Personal Information
If you would like to review or correct your personal information, please contact us by email at legal@toro.com.

Australian Consumer Law

Australian customers will find details relating to the Australian Consumer Law either inside the box or at your local Toro Dealer.

The Toro Warranty

A Limited Warranty

Conditions and Products Covered

The Toro® Company and its affiliate, Toro Warranty Company, pursuant to an agreement between them, jointly warrant your Toro Commercial product ("Product") to be free from defects in materials or workmanship for two years or 1500 operational hours*, whichever occurs first. This warranty is applicable to all products with the exception of Aerators (refer to separate warranty statements for these products). Where a warrantable condition exists, we will repair the Product at no cost to you including diagnostics, labor, parts, and transportation. This warranty begins on the date the Product is delivered to the original retail purchaser.
* Product equipped with an hour meter.

Instructions for Obtaining Warranty Service

You are responsible for notifying the Commercial Products Distributor or Authorized Commercial Products Dealer from whom you purchased the Product as soon as you believe a warrantable condition exists. If you need help locating a Commercial Products Distributor or Authorized Dealer, or if you have questions regarding your warranty rights or responsibilities, you may contact us at:

Commercial Products Service Department
Toro Warranty Company
8111 Lyndale Avenue South
Bloomington, MN 55420-1196
E-mail: commercial.warranty@toro.com

Owner Responsibilities

As the Product owner, you are responsible for required maintenance and adjustments stated in your Operator's Manual. Failure to perform required maintenance and adjustments can be grounds for disallowing a warranty claim.

Items and Conditions Not Covered

Not all product failures or malfunctions that occur during the warranty period are defects in materials or workmanship. This warranty does not cover the following:

- Product failures which result from the use of non-Toro replacement parts, or from installation and use of add-on, or modified non-Toro branded accessories and products. A separate warranty may be provided by the manufacturer of these items.
- Product failures which result from failure to perform recommended maintenance and/or adjustments. Failure to properly maintain your Toro product per the Recommended Maintenance listed in the *Operator's Manual* can result in claims for warranty being denied.
- Product failures which result from operating the Product in an abusive, negligent or reckless manner.
- Parts subject to consumption through use unless found to be defective. Examples of parts which are consumed, or used up, during normal Product operation include, but are not limited to, brakes pads and linings, clutch linings, blades, reels, bed knives, tines, spark plugs, castor wheels, tires, filters, belts, and certain sprayer components such as diaphragms, nozzles, and check valves, etc.
- Failures caused by outside influence. Items considered to be outside influence include, but are not limited to, weather, storage practices, contamination, use of unapproved coolants, lubricants, additives, fertilizers, water, or chemicals, etc.
- Normal noise, vibration, wear and tear, and deterioration.
- Normal "wear and tear" includes, but is not limited to, damage to seats due to wear or abrasion, worn painted surfaces, scratched decals or windows, etc.

Parts

Parts scheduled for replacement as required maintenance are warranted for the period of time up to the scheduled replacement time for that part. Parts replaced under this warranty are covered for the duration of the original product warranty and become the property of Toro. Toro will make the final decision whether to repair any existing part or assembly or replace it. Toro may use remanufactured parts for warranty repairs.

Note Regarding Deep Cycle Battery Warranty:

Deep cycle batteries have a specified total number of kilowatt-hours they can deliver during their lifetime. Operating, recharging, and maintenance techniques can extend or reduce total battery life. As the batteries in this product are consumed, the amount of useful work between charging intervals will slowly decrease until the battery is completely worn out. Replacement of worn out batteries, due to normal consumption, is the responsibility of the product owner. Battery replacement may be required during the normal product warranty period at owner's expense.

Maintenance is at Owner's Expense

Engine tune-up, lubrication cleaning and polishing, replacement of Items and Conditions Not Covered filters, coolant, and completing Recommended Maintenance are some of the normal services Toro products require that are at the owner's expense.

General Conditions

Repair by an Authorized Toro Distributor or Dealer is your sole remedy under this warranty.

Neither The Toro Company nor Toro Warranty Company is liable for indirect, incidental or consequential damages in connection with the use of the Toro Products covered by this warranty, including any cost or expense of providing substitute equipment or service during reasonable periods of malfunction or non-use pending completion of repairs under this warranty. Except for the Emissions warranty referenced below, if applicable, there is no other express warranty.

All implied warranties of merchantability and fitness for use are limited to the duration of this express warranty. Some states do not allow exclusions of incidental or consequential damages, or limitations on how long an implied warranty lasts, so the above exclusions and limitations may not apply to you.

This warranty gives you specific legal rights, and you may also have other rights which vary from state to state.

Countries Other than the United States or Canada

Customers should contact their Toro Distributor (Dealer) to obtain guarantee policies for your country, province, or state. If for any reason you are dissatisfied with your Distributor's service or have difficulty obtaining guarantee information, contact the Toro importer. If all other remedies fail, you may contact us at Toro Warranty Company.